MISSOURI HIGHWAYS AND TRANSPORTATION COMMISSION
PLANS FOR PROPOSED
NSR SHOOFLY BRIDGE AT MP S-45.25
OVER I-70
WENTZVILLE, MO

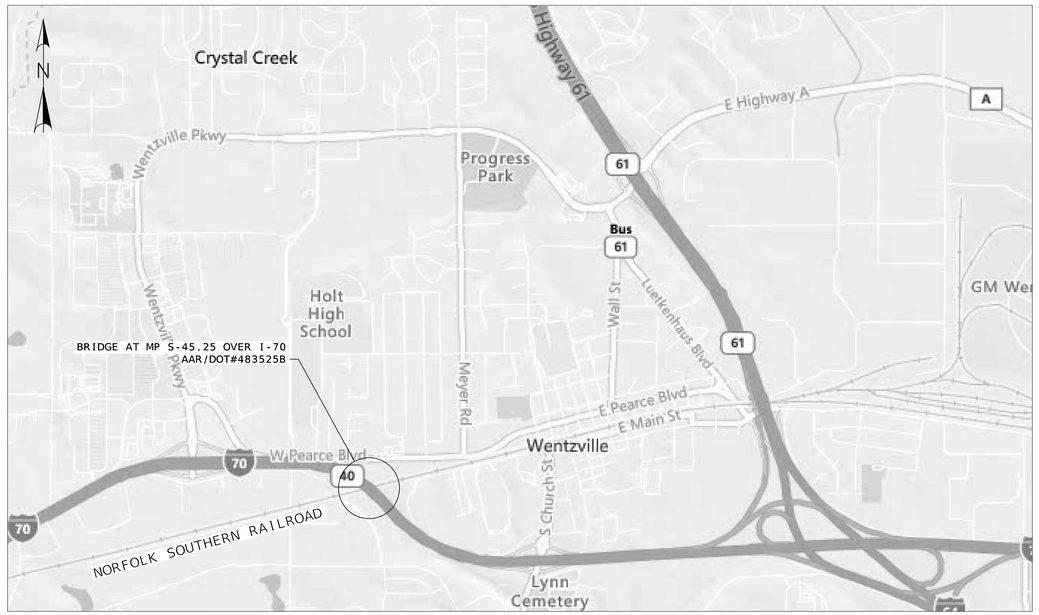

LOCATION MAP

Owner:
Mr. D.S. Starling P.E.
Senior Engineer Public Improvements
Norfolk Southern Railway Company
Engineering - Design & Construction
650 West Peachtree Street NW - Box 45
Atlanta, GA 30308
Phone: (470) 463-6721
Email: douglas.starling@nscorp.com

COVENTIONAL SYMBOLS
(USED IN PLANS)

	SYMBOL
EXISTING TRACK CENTERLINE	———
NEW TRACK CENTERLINE	———
EXISTING TRACK RELOCATE TO	———
EXISTING TRACK RELOCATE FROM	– – – –
EXISTING TRACK REMOVAL	– – – –

Detailed July 2025
Checked July 2025

THE EXISTENCE AND APPROXIMATE LOCATION OF UTILITY FACILITIES KNOWN TO EXIST, AS SHOWN ON THE PLANS, ARE BASED ON THE BEST INFORMATION AVAILABLE TO THE COMMISSION AT THIS TIME. THIS INFORMATION IS PROVIDED BY THE COMMISSION "AS-IS" AND THE COMMISSION EXPRESSLY DISCLAIMS ANY REPRESENTATION OR PERIL OF THE USER, AND THE COMMISSION SHALL NOT BE LIABLE FOR ANY DAMAGES THAT MAY ARISE FROM ANY ERROR IN THE INFORMATION. IT IS, THEREFORE, THE RESPONSIBILITY OF THE CONTRACTOR TO VERIFY THE EXISTENCE. LOCATION AND STATUS OF ANY FACILITY. SUCH VERIFICATION INCLUDES DIRECT CONTACT WITH THE LISTED UTILITIES.

Note: This drawing is not to scale. Follow dimensions.

NOT FOR CONSTRUCTION

STATE OF MISSOURI
SEAN THOMAS COONEY
NUMBER
PE-2014007262
PROFESSIONAL ENGINEER
9-12-2025

DATE PREPARED	9/12/2025
ROUTE	I-70
STATE	MO
DISTRICT	BR
SHEET NO.	A5801T-1
COUNTY	ST. CHARLES
JOB NO.	JST0020
CONTRACT ID.	
PROJECT NO.	
BRIDGE NO.	A5801T

DESCRIPTION | DATE

MISSOURI HIGHWAYS AND TRANSPORTATION COMMISSION
105 WEST CAPITOL
JEFFERSON CITY, MO 65102
1-888-ASK-MODOT (1-888-275-6636)

IMPROVE 70 ALLIANCE

HNTB
715 KIRK DRIVE
KANSAS CITY, MO 64105-1310
CERTIFICATE OF AUTHORITY
NO. 001270

Bartlett & West
601 MONROE ST., SUITE 201 - JEFFERSON CITY, MO 65101
PHONE: 573-893-4336
CERTIFICATE OF AUTHORITY NO. 000107 - ENGINEERING
WWW.BARTLETTWEST.COM

INDEX OF DRAWINGS

A5801T-1	TITLE
A5801T-2	SHEET INDEX
A5801T-3	GENERAL NOTES
A5801T-4	SITE PLAN
A5801T-5	STAGED CONSTRUCTION PHASING - PHASE 1 & 2
A5801T-6	STAGED CONSTRUCTION PHASING - PHASE 3 & 4
A5801T-7	GENERAL PLAN AND ELEVATION
A5801T-8	TYPICAL SECTIONS (1 OF 2)
A5801T-9	TYPICAL SECTIONS (2 OF 2)
A5801T-10	FOUNDATION PLAN
A5801T-11	ABUTMENT CAP DETAIL
A5801T-12	WINGWALL DETAILS
A5801T-13	INTERMEDIATE BENT DETAILS (PILE BENT)
A5801T-14	PIER DETAILS (DRILLED SHAFT)
A5801T-15	COLUMN/DRILLED SHAFT DETAILS
A5801T-16	FRAMING PLAN - SPANS 1 & 8
A5801T-17	BEAM ELEVATIONS - SPANS 1 & 8
A5801T-18	FRAMING PLAN AND BEAM ELEVATIONS - SPANS 2,3,4, & 7
A5801T-19	FRAMING PLAN AND BEAM ELEVATIONS - SPAN 5
A5801T-20	FRAMING PLAN AND GIRDER ELEVATIONS - SPAN 6
A5801T-21	SUPERSTRUCTURE DETAILS 1 - SPANS 1,2,3,4,5,7, & 8
A5801T-22	SUPERSTRUCTURE DETAILS 2 - SPAN 6
A5801T-23	SUPERSTRUCTURE DETAILS 3 - SPAN 6
A5801T-24	BEARING LAYOUT
A5801T-25	BEARING DETAILS
A5801T-26	SURVEY CONTROL POINTS
A5801T-27	SURVEY CONTROL DATA

STATE OF MISSOURI
SEAN THOMAS COONEY
NUMBER PE-2014007262
PROFESSIONAL ENGINEER
9-12-2025

DATE PREPARED 9/12/2025

ROUTE	STATE
I-70	MO
DISTRICT	SHEET NO.
BR	A5801T-2

COUNTY: ST. CHARLES
JOB NO. JST0020
CONTRACT ID.
PROJECT NO.
BRIDGE NO. A5801T

DESCRIPTION	DATE

MISSOURI HIGHWAYS AND TRANSPORTATION COMMISSION
105 WEST CAPITOL
JEFFERSON CITY, MO 65102
1-888-ASK-MODOT (1-888-275-6636)

IMPROVE 70 ALLIANCE

HNTB
715 KIRK DRIVE
KANSAS CITY, MO 64105-1310
CERTIFICATE OF AUTHORITY NO. 001270

Bartlett & West
601 MONROE ST., SUITE 201 - JEFFERSON CITY, MO 65101
PHONE: (573) 634-2022
CERTIFICATE OF AUTHORITY NO. 000167 - ENGINEERING
WWW.BARTLETTWEST.COM

Detailed July 2025
Checked July 2025

Note: This drawing is not to scale. Follow dimensions.

NOT FOR CONSTRUCTION

SHEET INDEX

GENERAL NOTES

CONSTRUCTION SPECIFICATIONS

Provide materials and perform work in accordance with the following. Where discrepancies exist between these requirements, the more stringent shall govern:

- Public Improvement Projects Manual: For Projects Which May Impact Norfolk Southern Railway Company, January 1, 2022 including appendices
- AREMA: American Railway Engineering and Maintenance-of-Way Association (AREMA) Manual for Railway Engineering, 2024.
- MODOT CMS: July 2024 Missouri Standard Specifications for Highway Construction
- Norfolk Southern Railway Standard Specifications for Materials and Construction, current edition
- Norfolk Southern Railway Quality Assurance Specifications for Ties and Timber

NORFOLK SOUTHERN RAILROAD COORDINATION AND MAINTENANCE-OF-WAY

The construction program will require close coordination and cooperation with Norfolk Southern Railroad personnel for all operations that involve track work and rail service. The time of specific track closing, openings, switching and other required rail, tie and ballast work in all cases shall be also subject to Norfolk Southern Railroad approval.

All work to be performed on, over, under, or adjacent to the railroad right-of-way shall comply with Norfolk Southern Railway Company ("Railroad", "NSR", or "NS") Public Projects Manual (Appendix E, Special Provisions for the Protection of Railway Interests, and Appendix H1, Overhead Grade Separation Design Criteria). When in conflict with other project specifications the most stringent one shall apply.

The contractor shall not commence any work on railroad right-of-way until they have complied with the conditions presented on the NS Public Projects Manual (Appendix E, Special Provisions for the Protection of Railway Interests).

The contractor shall so arrange and conduct work so that there will be no interference with railroad operations. Whenever work is liable to affect the operations or safety of trains, the methods of doing such work shall be submitted to the railroad engineer for approval, but such approval shall not relieve the contractor from any liability.

All proposed submittals required either by MODOT CMS or the NSR-PPM shall be submitted to NSR for review and approval.

All work for the ballast, rails, ties and incidental track metal work for the tracks will be furnished and placed by Norfolk Southern Railroad.

The contractor shall maintain a construction clearance of 10 feet horizontally (for elements below top of rail) from the centerline of tracks and 22 feet vertically from a point of level with the top of the higher rail at all times except as indicated by these plans or approved by NSR. Clearance of 14 feet horizontally shall be provided to any temporary works installed above the top of rail, except as indicated by these plans or approved by NSR.

NORFOLK SOUTHERN RAILROAD COORDINATION AND MAINTENANCE-OF-WAY (CONTINUED)

The railroad will be provided as-built drawings showing the actual clearances as constructed. depth, size, and location of all foundation components shall be shown on the drawings (see NS Public Projects Manual, appendix H1, section 8a).

"ONE CALL" Services do not locate buried railroad signal and communications lines. The contractor shall contact the railroad's representative 2 days in advance of work at those places where excavation, pile driving, or heavy loads may damage the railroad's underground facilities. Upon request from the contractor or sponsor, railroad forces will locate and paint mark or flag the railroad's underground facilities, the contractor shall avoid excavation or other disturbance of these facilities. If disturbance or excavation is required near a buried railroad facility, the contractor shall coordinate with the railroad to have the facility potholed manually with careful hand excavation. The facility shall be protected by the contractor during the course of the disturbance under the supervision and direction of the railroad's representative. (see NS Public Projects Manual, appendix e, section 3.d).

All utility installations or relocations that are required in conjunction with this project can be installed or relocated as part of the project provided the construction is performed by the project contractor or project contractor's sub-contractor. However, the utility must submit an application for the installation or relocation to Railpros or appropriate handling for license agreement and applicable fees. For utility applications go to: "https://www.norfolksouthern.com/en/rail-development-property/ns-property/projects-on-ns-property". Note: license agreement must be executed prior to utility being installed or relocated.

DIMENSIONS AND BOUNDARIES

All dimensions shown are horizontal unless notes otherwise. Superstructure dimensions shown are given at a temperature of 65° F.

EXCAVATION

The contractor is responsible for the stability of all excavated slopes. Direct surface runoff away from the excavation. Groundwater levels may fluctuate seasonally as a function of precipitation and other hydrological factors. Therefore, there may be considerable change in the water table or the presence of water where not previously encountered. Perform all excavations in accordance with OSHA Standards for shoring. Excavation and shoring shown in these plans assume an OSHA Type B soil (to be confirmed by the contractor).

Excavate according to construction sequences drawings and notes. Do not over excavate.

DESIGN SPECIFICATIONS

The design was completed in accordance with the following design standards:

- AREMA, chapters 8, 9 & 15
- NSR-PPM Appendix H.2 "Underpass Grade Separation Design Criteria"
- Reinforced concrete pier design as per AREMA, Chapter 8, table 8-2-5, load factor design.
- Structural steel design as per AREMA chapter 15, allowable stress design.
- Design live load: Cooper E-80 including alternate live load on 4 axles. design speed of 60 mph - freight.
- Live load distribution: to steel superstructure members per AREMA 15-1.3.4
- Impact load: rolling equipment without hammer blow. Steel superstructure per AREMA chapter 15-1.3.5
- Fatigue analysis is based on AREMA 15-1.3.13.

DESIGN DATA

CONCRETE
Substructure concrete shall obtain a 28 day compressive strength of 4500 psi (minimum) (abutments piers, intermediate bents and foundations)

Chamfer all exposed concrete edges and corners 3/4" except as noted.

Reinforcing steel shall be ASTM A615, grade 60, except as noted. Fabrication to be in accordance with AREMA, chapter 8.

All construction joints shown on these plans shall be required unless shown as optional. Construction joints permitted except as shown on the plans, or where written approval from the engineer has been obtained.

STRUCTURAL STEEL
All Structural Steel shall conform to ASTM A709, Grade 50W, except as noted

All Structural Steel Denoted in the plans as "Impact Testing Required" (ITR) shall conform to ASTM A709, Gr. 50WT2 and shall meet impact requirements for high strength Structural Steel per chapter 15 of the Arema Manual.

STRUCTURAL BOLTS
Unless otherwise noted, all structural bolts shall be 7/8" diameter ASTM F3125, Grade A325, high strength, Type 3, with 15/16" diameter open holes unless noted otherwise. All washers shall be ASTM F436 - Type 3 and all nuts shall be heavy hex ASTM A563 - Type 3. Galvanized bolts shall not be used.

All surfaces, including faying surfaces, of structural steel shall be cleaned per steel structures painting council specification SSPC-SP6. Faying surfaces shall be class B. Primed or painted surfaces shall be cleaned per steel structures painting council specifications SSPC-SP10.

Anchor bolts shall be ASTM F1554 Grade 105 (105 ksi minimum yield strength) Galvanized

DESIGN DENSITIES:

Steel:	490 pcf
Concrete:	150 pcf
Soil:	125 pcf
Track:	200 plf

For precast concrete notes, see project specifications - job special provisions.

DESIGN UNIT STRESSES:
Structural steel HP pile (ASTM A572 Grade 50) fy= 50,000 psi

Foundation Data

Type	Design Data		Substructure Number								
			Abutment 1	Bent 2	Bent 3	Bent 4	Bent 5	Bent 6	Bent 7	Bent 8	Abutment 9
Load Bearing Pile (driven)	Pile Type and Size		HP14x117	HP14x117	HP14x117	HP14x117	HP14x117	--	--	HP14x117	HP14x117
	Number	ea	4	4	4	4	4	--	--	4	4
	Approximate Length Per Each	ft	34	43	43	42	41	--	--	42	34
	Pile Point Reinforcement	ea	All	None	None	None	None	--	--	None	All
	Pile Driving Verification Method		WEAP	N/A	N/A	N/A	N/A	--	--	N/A	WEAP
	Factor of Safety		2.5	2.5	2.5	2.5	2.5	--	--	2.5	2.5
	Minimum Nominal Axial Compressive Resistance	kip	550	550	550	550	550	--	--	550	550
Rock Socket	Pile Type and Size		--	--	--	--	--	Drilled Shaft	Drilled Shaft	--	--
	Number	ea	--	--	--	--	--	2	2	--	--
	Foundation Material		--	--	--	--	--	Limestone	Limestone	--	--
	Elevation Range	ft	--	--	--	--	--	606-583 ft	606-582 ft	--	--
	Factor of Safety		--	--	--	--	--	2.5	2.5	--	--
	Minimum Ultimate Axial Compressive Resistance (Side Resistance)	ksf	--	--	--	--	--	6 ksf	6 ksf	--	--
	Minimum Ultimate Axial Compressive Resistance (Tip Resistance)	ksf	--	--	--	--	--	80 ksf	80 ksf	--	--

WEAP = Wave Equation Analysis of Piles

Load Bearing Piles:

Required Axial Compression Resistance = Axial Design Load * Factor of Safety

Rock Socket (Drilled Shafts):

Required Axial Compression Resistance = Axial Design Load * Factor of Safety

Detailed July 2025
Checked July 2025

Note: This drawing is not to scale. Follow dimensions.

NOT FOR CONSTRUCTION

GENERAL NOTES

STATE OF MISSOURI
SEAN THOMAS COONEY
NUMBER
PE-2014007262
PROFESSIONAL ENGINEER
9-12-2025

DATE PREPARED	
9/12/2025	
ROUTE: I-70	STATE: MO
DISTRICT: BR	SHEET NO.: A5801T-3
COUNTY: ST. CHARLES	
JOB NO.: JST0020	
CONTRACT ID.	
PROJECT NO.	
BRIDGE NO.: A5801T	

DATE	DESCRIPTION

MISSOURI HIGHWAYS AND TRANSPORTATION COMMISSION
105 WEST CAPITOL
JEFFERSON CITY, MO 65102
1-888-ASK-MODOT (1-888-275-6636)

IMPROVE 70 ALLIANCE

HNTB
715 KIRK DRIVE
KANSAS CITY, MO 64105-1310
CERTIFICATE OF AUTHORITY
NO. 001270

Bartlett & West
601 MONROE ST., SUITE 201 - JEFFERSON CITY, MO 65101
(573) 634-2448
CERTIFICATE OF AUTHORITY NO. E0-0707 - ENGINEERING
WWW.BARTLETTWEST.COM

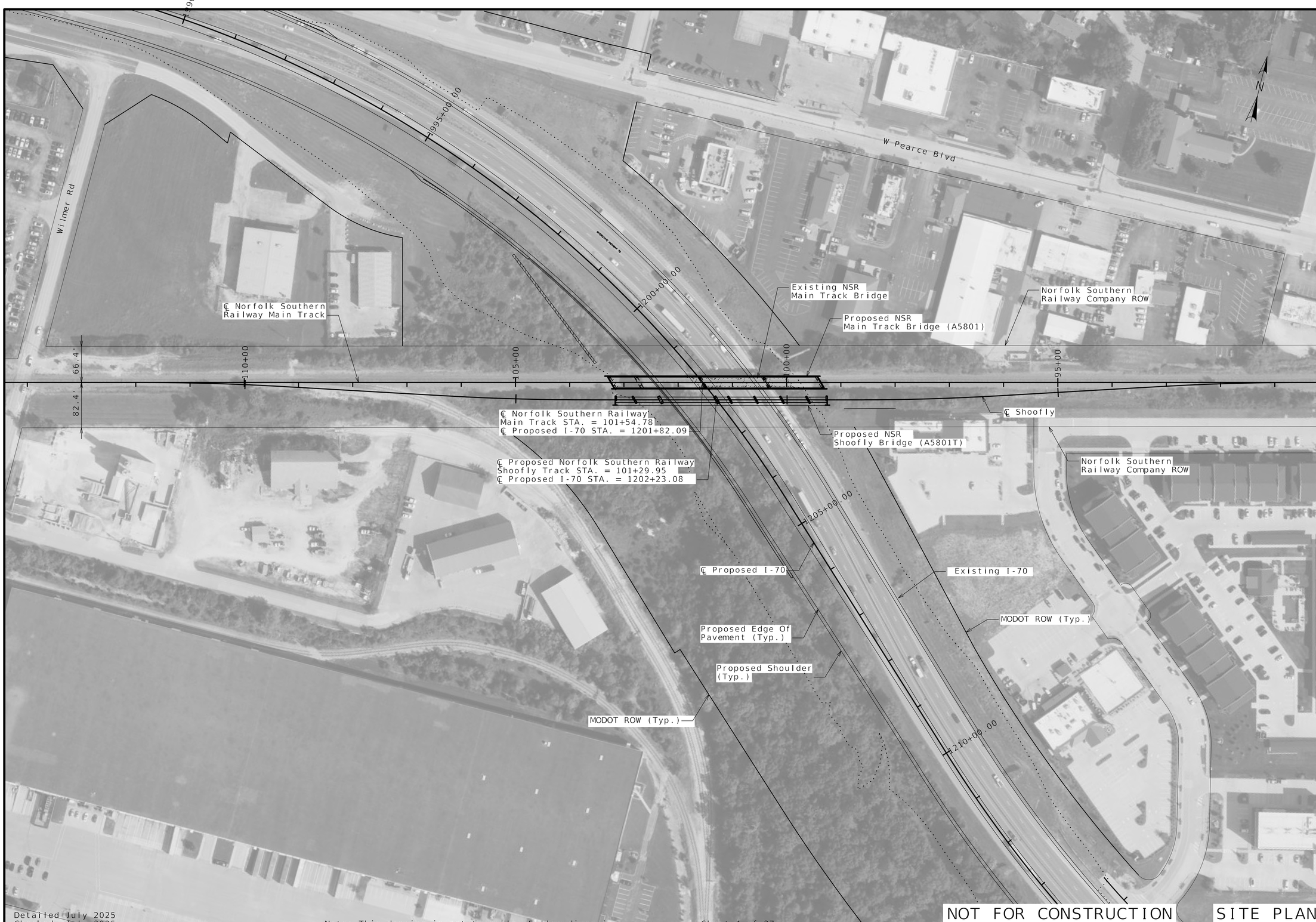

Detailed July 2025
Checked July 2025

Note: This drawing is not to scale. Follow dimensions.

Sheet 4 of 27

NOT FOR CONSTRUCTION

SITE PLAN

STATE OF MISSOURI
SEAN THOMAS COONEY
NUMBER PE-2014007262
PROFESSIONAL ENGINEER
9-12-2025

DATE PREPARED	9/12/2025
ROUTE	I-70
STATE	MO
DISTRICT	BR
SHEET NO.	A5801T-4
COUNTY	ST. CHARLES
JOB NO.	JST0020
CONTRACT ID.	
PROJECT NO.	
BRIDGE NO.	A5801T

DATE	DESCRIPTION

MISSOURI HIGHWAYS AND TRANSPORTATION COMMISSION
105 WEST CAPITOL
JEFFERSON CITY, MO 65102
1-888-ASK-MODOT (1-888-275-6636)

IMPROVE 70 ALLIANCE

HNTB
715 KIRK DRIVE
KANSAS CITY, MO 64105-1310
CERTIFICATE OF AUTHORITY
NO. 001270

Bartlett & West
601 MONROE ST., SUITE 201 - JEFFERSON CITY, MO 65101
PHONE: 573-634-2448
CERTIFICATE OF AUTHORITY NO. 000197 - ENGINEERING
WWW.BARTLETTWEST.COM

B_A5801T_004_JST0020_PLAN.dgn 3:51:40 PM 9/12/2025

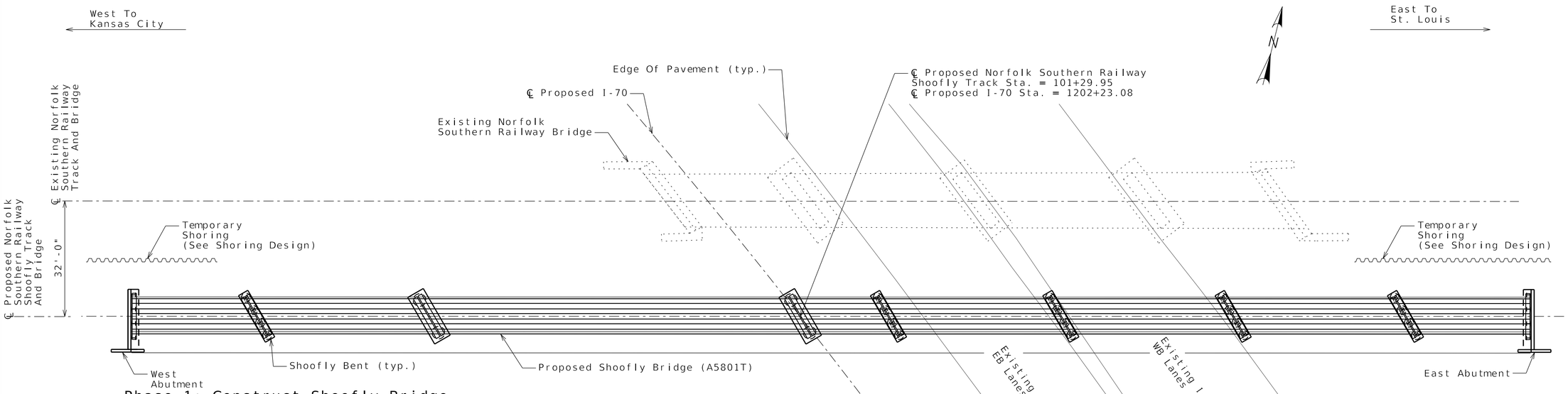

Phase 1: Construct Shoofly Bridge (Offline)(NSR And Roadway (I-70) To Match Existing)

1A Drill/drive Steel HP Piles Per Foundation Plan

1B Install Temporary Shoring to Support Existing Mainline Track During Shoofly Construction.

1C Install Drilled Shafts, Concrete Columns, And Concrete Cap

1D Install Precast Abutments And Bents

1E Install Steel Beam Spans

1F Install Timber Bridge Deck, Walkway and Handrail (Designed, Furnished and Installed by NSR)

1G Shift Existing Track To Shoofly Track and Perform Cut over of Service (NSR)

Note: Minimum clearance from low chord to the roadway (Existing I-70) will be 19'-4". That clearance will be maintained throughout this phase.

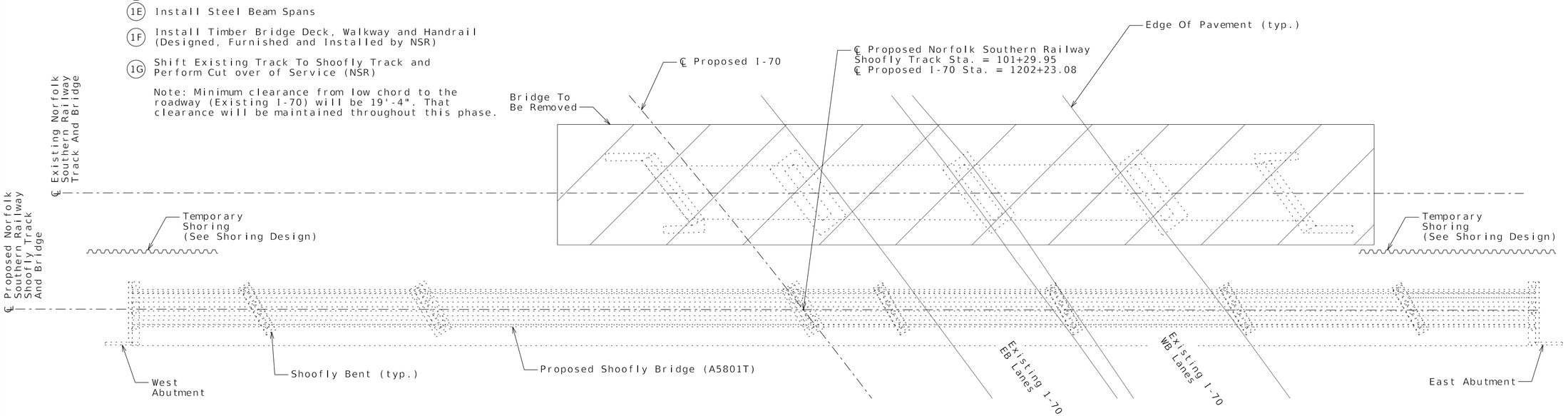

Phase 2: Remove Existing Norfolk Southern Railroad Structure

2A Coordinate With Roadway Plans On Sequence Of Lane Closures For Removing Existing Mainline Track & Bridge

Note: Minimum clearance from low chord to the roadway (Existing I-70) will be 19'-4". That clearance will be maintained throughout this phase.

NOT FOR CONSTRUCTION

STAGED CONSTRUCTION PHASING - PHASE 1 & 2

Detailed July 2025
Checked July 2025

Note: This drawing is not to scale. Follow dimensions.

STATE OF MISSOURI
SEAN THOMAS COONEY
NUMBER
PE-2014007262
PROFESSIONAL ENGINEER
9-12-2025

DATE PREPARED	9/12/2025
ROUTE	I-70
STATE	MO
DISTRICT	BR
SHEET NO.	A5801T-5
COUNTY	ST. CHARLES
JOB NO.	JST0020
CONTRACT ID.	
PROJECT NO.	
BRIDGE NO.	A5801T

DESCRIPTION

DATE

MISSOURI HIGHWAYS AND TRANSPORTATION COMMISSION
105 WEST CAPITOL
JEFFERSON CITY, MO 65102
1-888-ASK-MODOT (1-888-275-6636)

IMPROVE 70 ALLIANCE

HNTB
715 KIRK DRIVE
KANSAS CITY, MO 64105-1310
CERTIFICATE OF AUTHORITY
NO. 001270

Bartlett & West
601 MONROE ST., SUITE 201 - JEFFERSON CITY, MO 65101
PHONE: (573) 634-2022
CERTIFICATE OF AUTHORITY NO. 000167 - ENGINEERING
WWW.BARTLETTWEST.COM

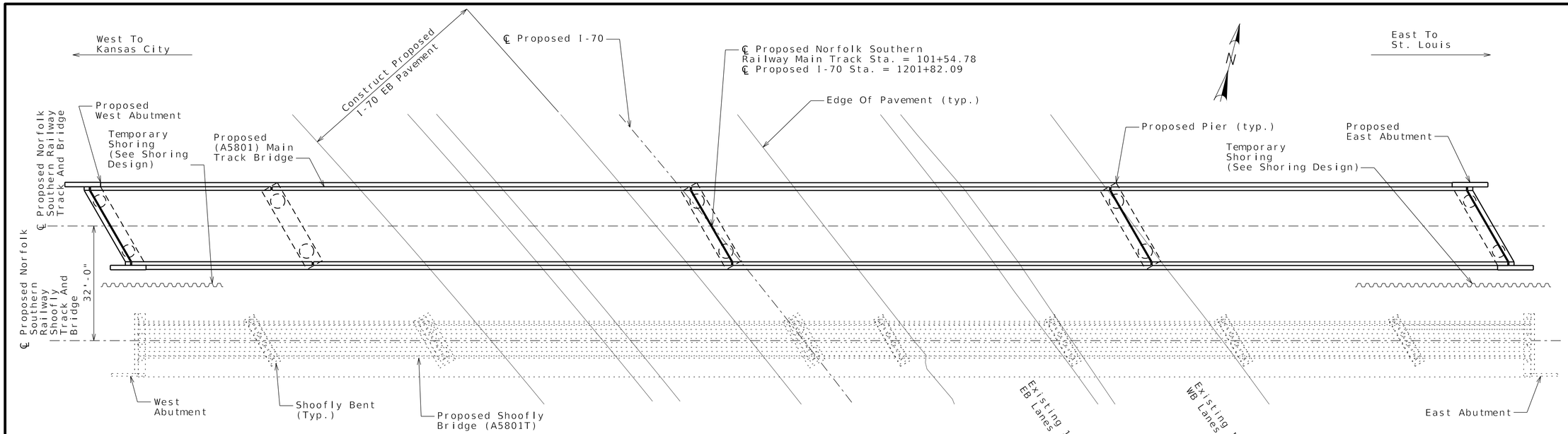

PHASE 3: CONSTRUCT PROPOSED MAIN TRACK NORFOLK SOUTHERN RAILROAD BRIDGE

- (3A) Install Drilled Shafts
- (3B) Construct Concrete Abutments And Caps
- (3C) Install Steel Girders For Superstructure
- (3D) Construct CIP Concrete Deck
- (3E) Construct Proposed Maintrack (NSR)
- (3F) Perform Cut Over of Service and Restore Train Traffic on Proposed Main Track (NSR)

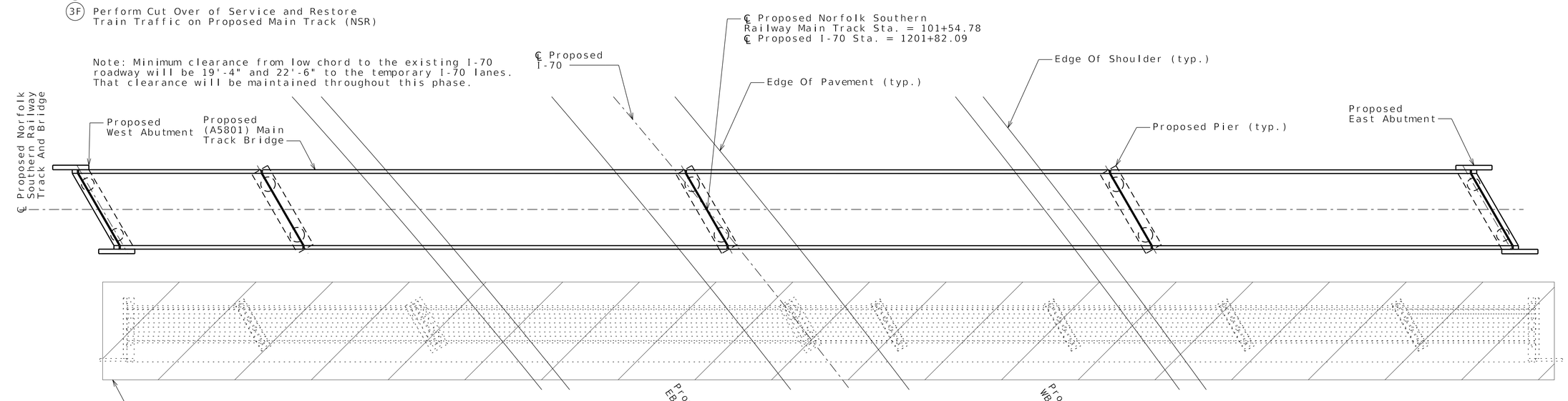

Phase 4: Remove Shoofly Bridge

(4A) Remove Shoofly Bridge

Note: Minimum clearance from low chord to the proposed I-70 EB will be 22'-4". That clearance will be maintained throughout this phase. No vehicle traffic will be on proposed I-70 WB during this phase.

NOT FOR CONSTRUCTION
STAGED CONSTRUCTION PHASING - PHASE 3 & 4

Detailed July 2025
Checked July 2025

Note: This drawing is not to scale. Follow dimensions.

STATE OF MISSOURI
SEAN THOMAS COONEY
NUMBER
PE-2014007262
PROFESSIONAL ENGINEER
9-12-2025

DATE PREPARED	9/12/2025
ROUTE	I-70
STATE	MO
DISTRICT	BR
SHEET NO.	A5801T-6
COUNTY	ST. CHARLES
JOB NO.	JST0020
CONTRACT ID.	
PROJECT NO.	
BRIDGE NO.	A5801T

DESCRIPTION

DATE

MISSOURI HIGHWAYS AND TRANSPORTATION COMMISSION
105 WEST CAPITOL
JEFFERSON CITY, MO 65102
1-888-ASK-MODOT (1-888-275-6636)

IMPROVE 70 ALLIANCE

HNTB
715 KIRK DRIVE
KANSAS CITY, MO 64105-1310
CERTIFICATE OF AUTHORITY
NO. 001270

Bartlett & West
601 MONROE ST., SUITE 201 - JEFFERSON CITY, MO 65101
PHONE: (573) 635-2994
CERTIFICATE OF AUTHORITY NO. 000167 - ENGINEERING
WWW.BARTLETTWEST.COM

B_A5801T_006_JST0020_PHAS3-4.dgn 3:52:38 PM 9/12/2025

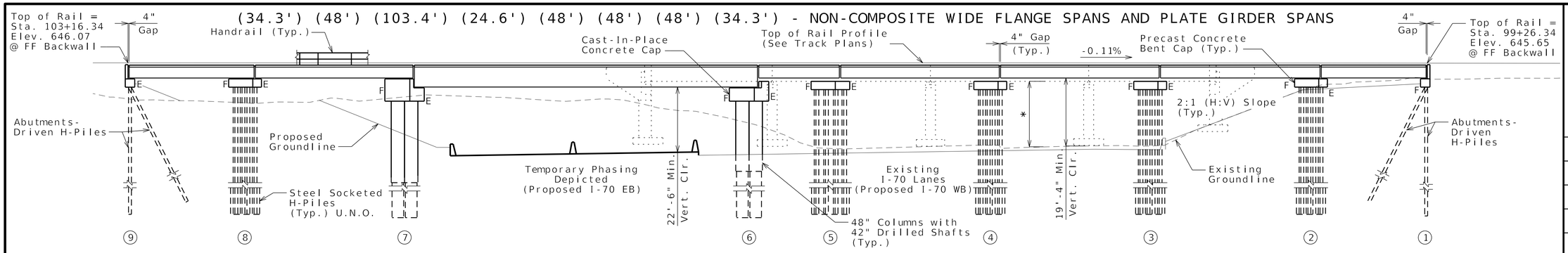

GENERAL ELEVATION

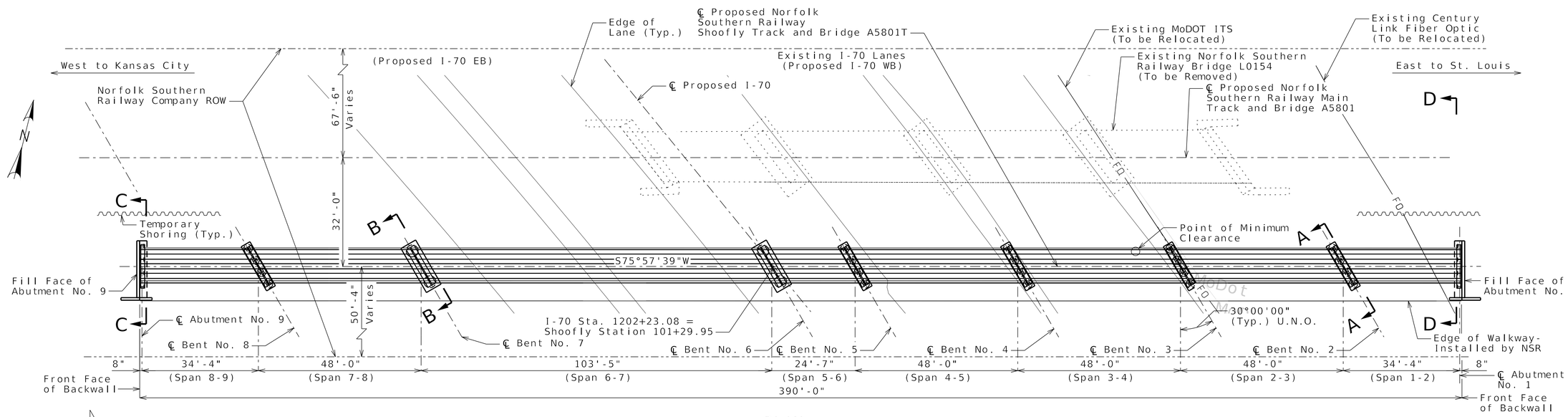

PLAN

(See Phasing Plans for More Details - Phase 3 shown above)

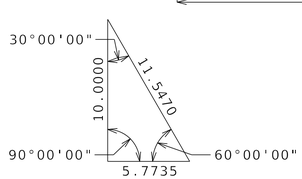

Notes:
The elevation of the existing Top-Of-Rail profile shall be verified before beginning construction. All discrepancies shall be brought to the attention of the Norfolk Southern Railroad Public projects engineer.

* Existing Vertical Clearance (Posted)
WB I-70 = 15'-10"
EB I-70 = 15'-8"

U.N.O. denotes Unless Noted Otherwise.
FF = Front Face

For Sections A-A, B-B, C-C, and D-D, see Sheets A5801T-9 & A5801T-10.

NOT FOR CONSTRUCTION
GENERAL PLAN & ELEVATION

Detailed July 2025
Checked July 2025

Note: This drawing is not to scale. Follow dimensions.

STATE OF MISSOURI
SEAN THOMAS COONEY
NUMBER PE-2014007262
PROFESSIONAL ENGINEER
9-12-2025

DATE PREPARED	9/12/2025
ROUTE	I-70
STATE	MO
DISTRICT	BR
SHEET NO.	A5801T-7
COUNTY	ST. CHARLES
JOB NO.	JST0020
CONTRACT ID.	
PROJECT NO.	
BRIDGE NO.	A5801T

DESCRIPTION

DATE

MISSOURI HIGHWAYS AND TRANSPORTATION COMMISSION
105 WEST CAPITOL
JEFFERSON CITY, MO 65102
1-888-ASK-MODOT (1-888-275-6636)

IMPROVE 70 ALLIANCE

HNTB
715 KIRK DRIVE
KANSAS CITY, MO 64105-1310
CERTIFICATE OF AUTHORITY
NO. 001270

Bartlett & West
601 MONROE ST., SUITE 201 - JEFFERSON CITY, MO 65101
PHONE: 573-634-2448
CERTIFICATE OF AUTHORITY NO. 000197 - ENGINEERING
WWW.BARTLETTWEST.COM

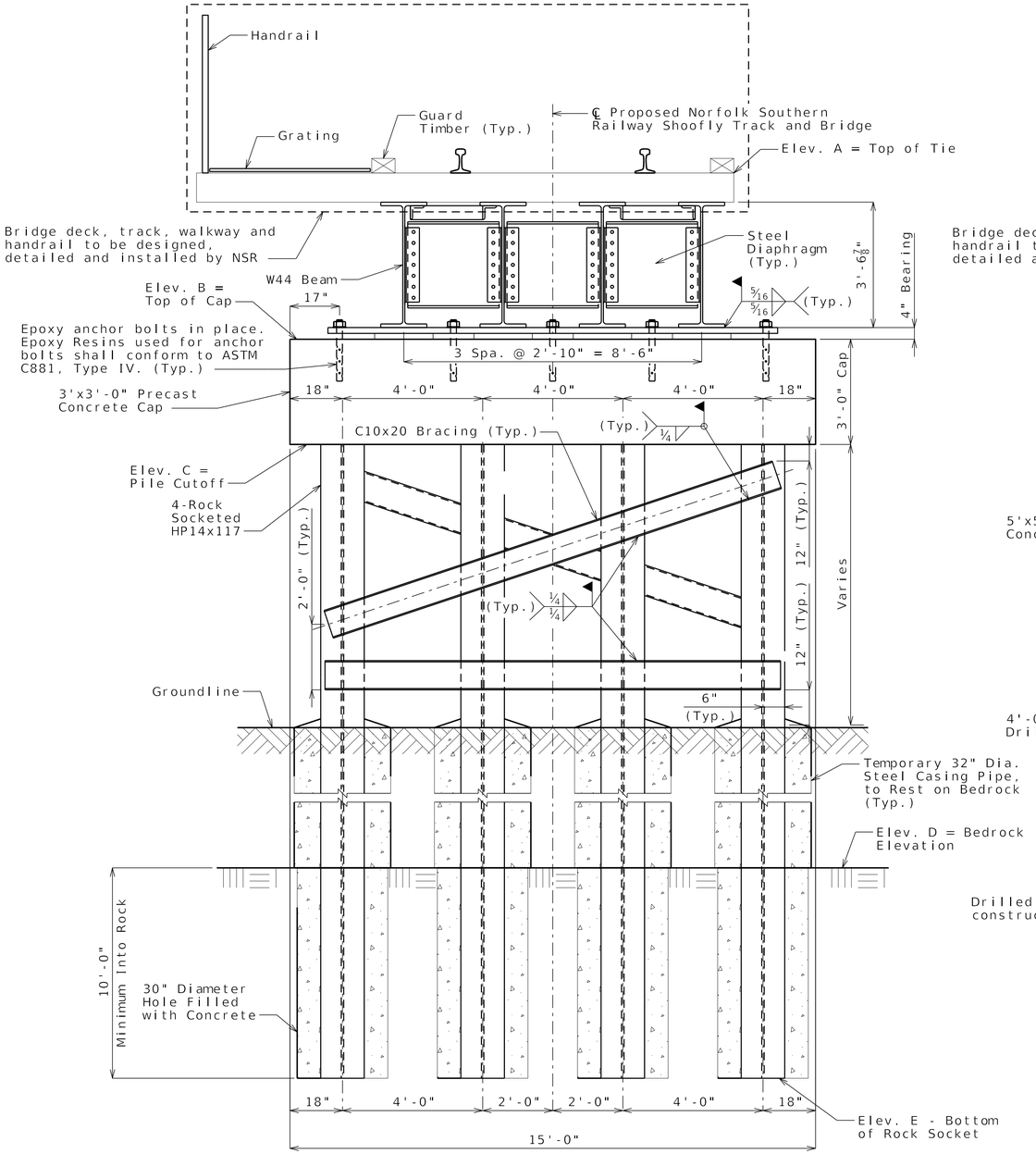

SECTION A-A

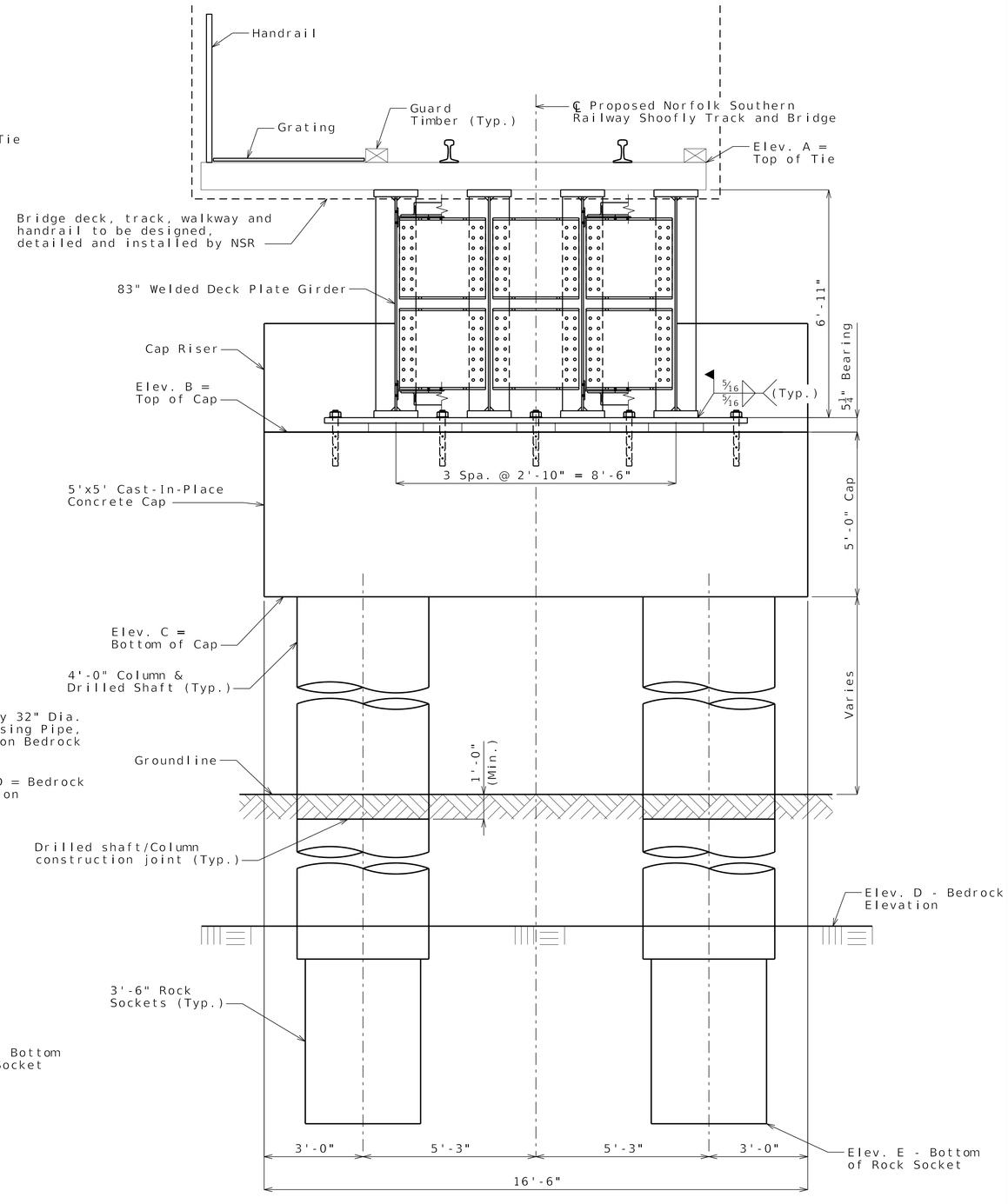

SECTION B-B

NOTES:

For location of Section A-A and B-B, see Sheet No. A5801T-7

For substructure elevations and Socketed Pile Detail, see Sheet No. A5801T-10

NOT FOR CONSTRUCTION
TYPICAL SECTIONS (1 OF 2)

Detailed July 2025
Checked July 2025

Note: This drawing is not to scale. Follow dimensions.

STATE OF MISSOURI
SEAN THOMAS COONEY
NUMBER PE-2014007262
PROFESSIONAL ENGINEER
9-12-2025

DATE PREPARED	9/12/2025
ROUTE	I-70
STATE	MO
DISTRICT	BR
SHEET NO.	A5801T-8
COUNTY	ST. CHARLES
JOB NO.	JST0020
CONTRACT ID.	
PROJECT NO.	
BRIDGE NO.	A5801T

DESCRIPTION

DATE

MISSOURI HIGHWAYS AND TRANSPORTATION COMMISSION
105 WEST CAPITOL
JEFFERSON CITY, MO 65102
1-888-ASK-MODOT (1-888-275-6636)

IMPROVE 70 ALLIANCE

HNTB
715 KIRK DRIVE
KANSAS CITY, MO 64105-1310
CERTIFICATE OF AUTHORITY NO. 001270

Bartlett & West
601 MONROE ST., SUITE 201 - JEFFERSON CITY, MO 65101
(573) 893-1912 - FAX (573) 893-1915
CERTIFICATE OF AUTHORITY NO. 000107 - ENGINEERING
WWW.BARTLETTWEST.COM

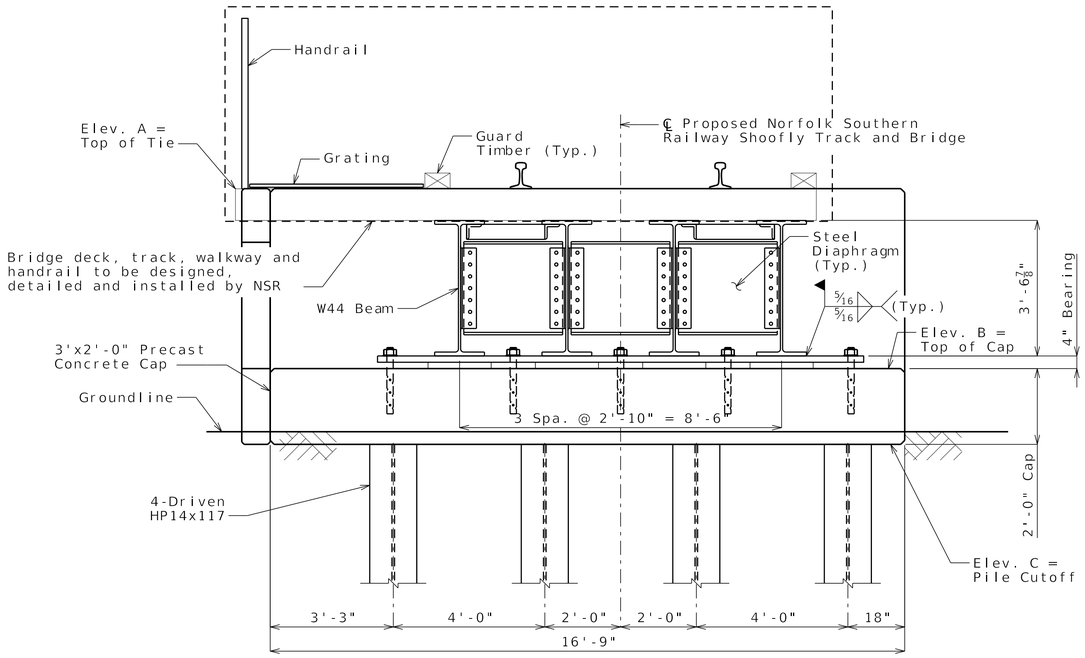

SECTION C-C

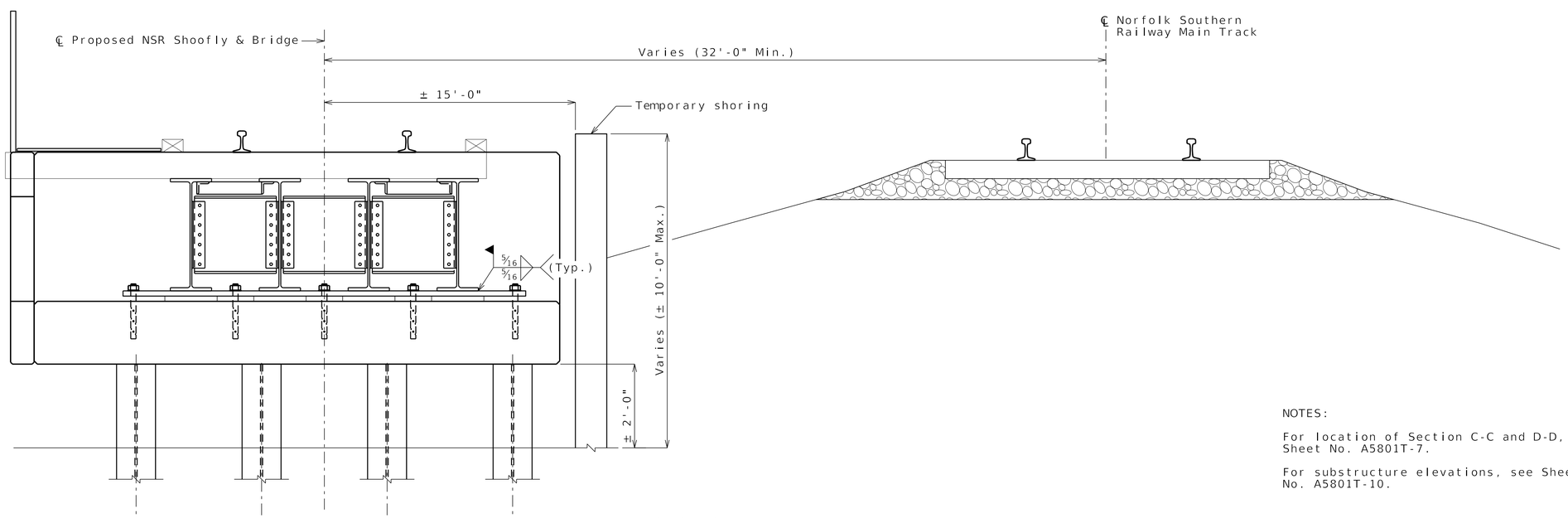

SECTION D-D

NOTES:

For location of Section C-C and D-D, see Sheet No. A5801T-7.

For substructure elevations, see Sheet No. A5801T-10.

NOT FOR CONSTRUCTION
TYPICAL SECTIONS (2 OF 2)

Detailed July 2025
Checked July 2025

Note: This drawing is not to scale. Follow dimensions.

STATE OF MISSOURI
SEAN THOMAS COONEY
NUMBER
PE-2014007262
PROFESSIONAL ENGINEER
9-12-2025

DATE PREPARED	9/12/2025
ROUTE	I-70
STATE	MO
DISTRICT	BR
SHEET NO.	A5801T-9
COUNTY	ST. CHARLES
JOB NO.	JST0021
CONTRACT ID.	
PROJECT NO.	
BRIDGE NO.	A5801T

DESCRIPTION

DATE

MISSOURI HIGHWAYS AND TRANSPORTATION COMMISSION
105 WEST CAPITOL
JEFFERSON CITY, MO 65102
1-888-ASK-MODOT (1-888-275-6636)

IMPROVE 70 ALLIANCE

HNTB
715 KIRK DRIVE
KANSAS CITY, MO 64105-1310
CERTIFICATE OF AUTHORITY
NO. 001270

Bartlett & West
601 MONROE ST., SUITE 201 - JEFFERSON CITY, MO 65101
PHONE: (573) 635-5030
CERTIFICATE OF AUTHORITY NO. 000167 - ENGINEERING
WWW.BARTLETTWEST.COM

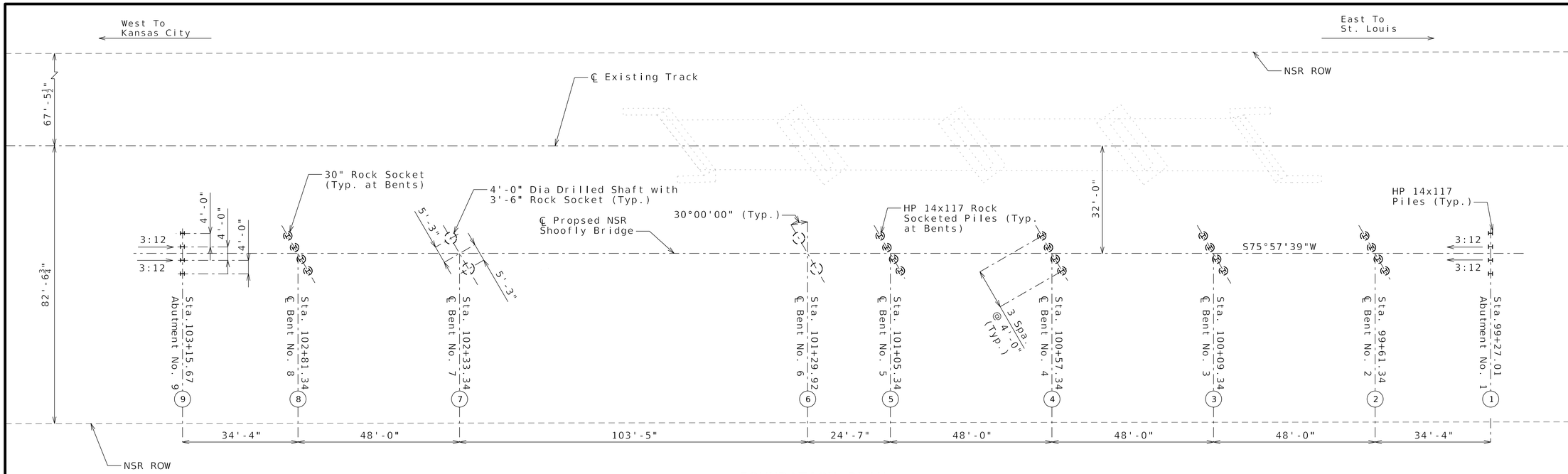

FOUNDATION PLAN

Driven Piles:

Manufactured pile point reinforcement shall be used on all piles at the end bents.

Embankment fill shall be completed up to the elevation of the pile cutoffs within the limits of the structure and for not less than 25 feet in back of the fill face of the abutments before any piles are driven for any piles falling within the embankment section.

HP piles are anticipated to be driven to refusal on rock. Review all borings for depth of rock and restrict driving as appropriate to comply with hard rock driving criteria in accordance with section 702 of MODOT Standard Construction Specifications. When pile refusal on rock occurs , as approved by the engineer, the minimum ultimate axial compressive resistance is verified and no additional pile driving verification method is required.

TABLE OF ELEVATIONS

Bent No.	Station	T/R	Elevations					Rock Socket Length (ft)
			A	B	C	D	E	
1	99+27.01	645.65	644.98	640.24	638.24	605.50	-	-
2	99+61.34	645.69	645.02	640.28	637.28	604.60	594.60	10
3	100+09.34	645.74	645.07	640.33	637.33	604.60	594.60	10
4	100+57.34	645.79	645.12	640.38	637.38	605.80	595.80	10
5	101+05.34	645.84	645.17	640.43	637.43	606.60	596.60	10
6	101+29.92	645.87	645.20	637.01	632.01	607.80	587.80	20
7	102+33.34	645.98	645.31	637.13	632.13	606.90	586.90	20
8	102+81.34	646.04	645.37	640.63	637.63	606.00	596.00	10
9	103+15.67	646.08	645.41	640.67	638.67	605.00	-	-

Pile Socket Notes:

1. The Socket Concrete Shall be class 40 With a Slump of 6" to 9". F'c = 4,000 at 28 Days.

2. The Concrete Shall be Prevented From Hitting the Sides of the Hole or the Steel Pile by Directing the Pour Through a Hopper or Using the Tremie Method.

3. No Concrete Shall be Placed by Freefall Methods in Standing Water Greater Than 3" Depth.

4. The Concrete Shall be Pumped or Placed with a Tremie if Ground Water Cannot be Adequately Controlled, or if Concrete Cannot be Directed Vertically Down the Shaft. The Bottom of the Tremie Shall be kept Initially as Near as Possible to the Bottom of the Shaft and Always at least 5' Below the Top of the Column of Concrete.

5. Crown the Top of Socket Concrete to Provide 1" Wash Away from Steel H-Pile.

6. Any Loose Material present in the Drilled Sockets Must be Removed Prior to Placement of Piles and Concrete such that no more than ½" Remains. The H-Piles must be Clean and Free of Dirt and Loose Rust.

7. The Drilled Socket Shall be Filled with Concrete Within 4 Hours of Completing the Socket Excavation.

8. Symbol X:12 Denotes direction and amount of Pile batter.

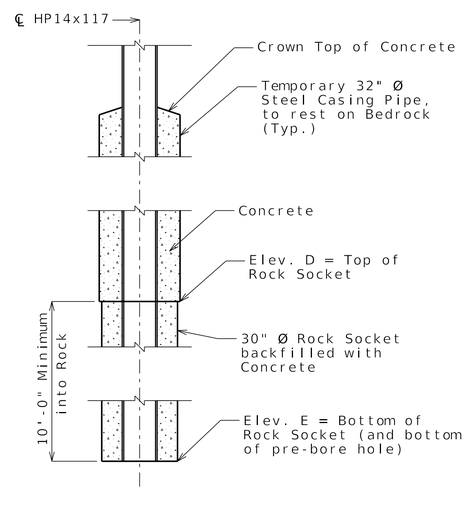

SOCKETED PILE DETAIL

Drilled Shaft Notes

1. Verify that socket extended through and terminates in sound limestone.

2. Rock socket cleanout shall be verified using a video shaft inspection device supplied and operated by the contractor. See project Drilled Shaft Construction AAS for details.

3. Provide sonic non-destructive integrity testing, consisting of cross-hole sonic logging (CSL) measurement, for each completed drilled shaft and rock socket, for all access tube combinations. See project Drilled Shaft Construction AAS for access tube and testing requirements.

NOT FOR CONSTRUCTION

FOUNDATION PLAN

Detailed July 2025
Checked July 2025

Note: This drawing is not to scale. Follow dimensions.

STATE OF MISSOURI
SEAN THOMAS COONEY
NUMBER
PE-2014007262
PROFESSIONAL ENGINEER
9-12-2025

DATE PREPARED	9/12/2025
ROUTE	I-70
STATE	MO
DISTRICT	BR
SHEET NO.	A5801T-10
COUNTY	ST. CHARLES
JOB NO.	JST0020
CONTRACT ID.	
PROJECT NO.	
BRIDGE NO.	A5801T

DESCRIPTION

DATE

MISSOURI HIGHWAYS AND TRANSPORTATION COMMISSION

105 WEST CAPITOL
JEFFERSON CITY, MO 65102
1-888-ASK-MODOT (1-888-275-6636)

IMPROVE 70 ALLIANCE

HNTB
715 KIRK DRIVE
KANSAS CITY, MO 64105-1310
CERTIFICATE OF AUTHORITY
NO. 001270

Bartlett & West
601 MONROE ST., SUITE 201 - JEFFERSON CITY, MO 65101
PHONE: 573-635-7910 FAX: 573-635-7911
CERTIFICATE OF AUTHORITY NO. 000101 - ENGINEERING
WWW.BARTLETTWEST.COM

REINFORCING STEEL SCHEDULE PRECAST ABUTMENT CAP							
MARK	BAR NO.	NO. REQ.	LENGTH FT	LENGTH IN.	TYPE	LOCATION	WEIGHT (LBS.)
501	5	2	3	8	3	End Bar	8
502	5	14	16	5	STR.	Horizontal	240
601	6	68	8	0	2	Shear Stirrups	818
701	7	34	13	4	4	Vertical	927
702	7	12	16	5	STR.	Horizontal	403

BENDING DIAGRAM

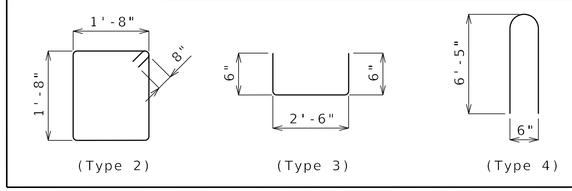

* Quantities are per abutment cap (2 total required)

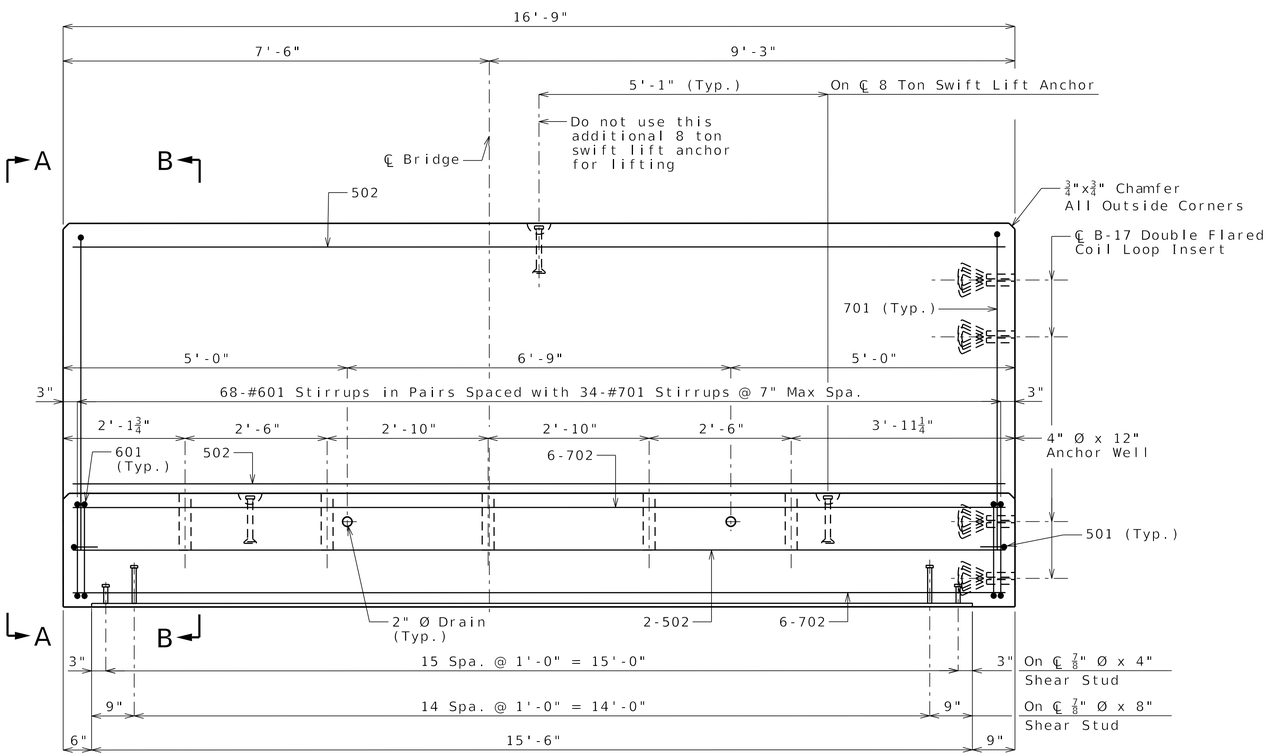

PRECAST ABUTMENT CAP
(Abutment 1 shown, Abutment 9 opposite hand)
All bars not shown for clarity.

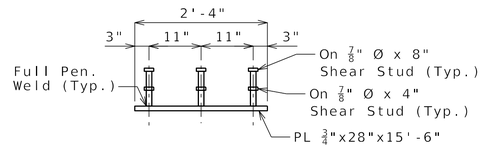

STUD AND PLATE LAYOUT

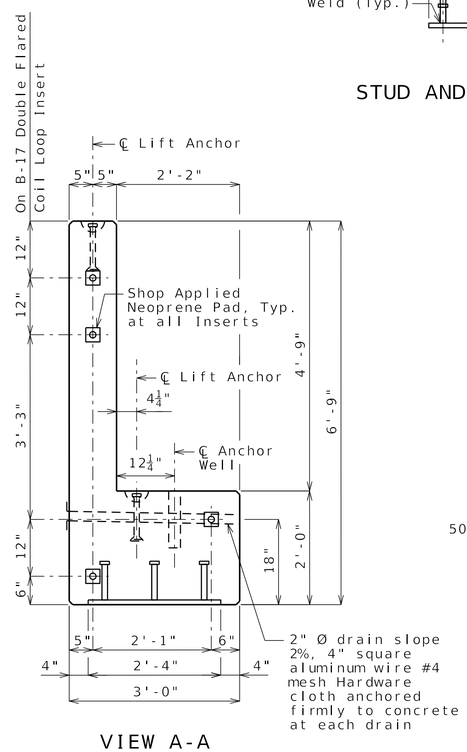

VIEW A-A

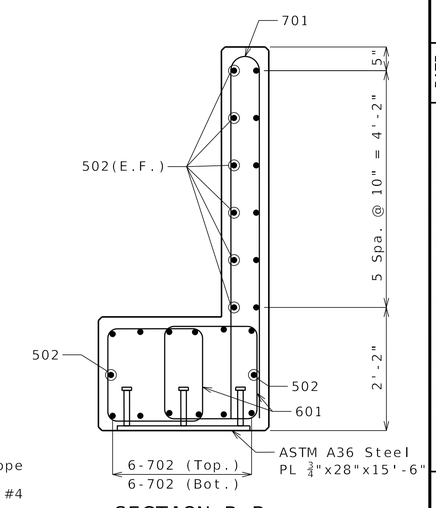

SECTION B-B

Note:
For swift lift anchor details see Sheet A5801T-12.

NOT FOR CONSTRUCTION
ABUTMENT CAP DETAIL

STATE OF MISSOURI
SEAN THOMAS COONEY
NUMBER PE-2014007262
PROFESSIONAL ENGINEER
9-12-2025

DATE PREPARED	9/12/2025
ROUTE	I-70
STATE	MO
DISTRICT	BR
SHEET NO.	A5801T-11
COUNTY	ST. CHARLES
JOB NO.	JST0020
CONTRACT ID.	
PROJECT NO.	
BRIDGE NO.	A5801T

DESCRIPTION

DATE

MISSOURI HIGHWAYS AND TRANSPORTATION COMMISSION
105 WEST CAPITOL
JEFFERSON CITY, MO 65102
1-888-ASK-MODOT (1-888-275-6636)

IMPROVE 70 ALLIANCE

HNTB
715 KIRK DRIVE
KANSAS CITY, MO 64105-1310
CERTIFICATE OF AUTHORITY NO. 001270

Bartlett & West
601 MONROE ST., SUITE 201 - JEFFERSON CITY, MO 65101
(573) 634-2448 FAX: (573) 634-8693
CERTIFICATE OF AUTHORITY NO. 000181 - ENGINEERING
WWW.BARTLETTWEST.COM

Detailed JULY 2025
Checked JULY 2025

Note: This drawing is not to scale. Follow dimensions.

B_A5801T_011_JST0020_BENT1-1.dgn 3:53:17 PM 9/12/2025

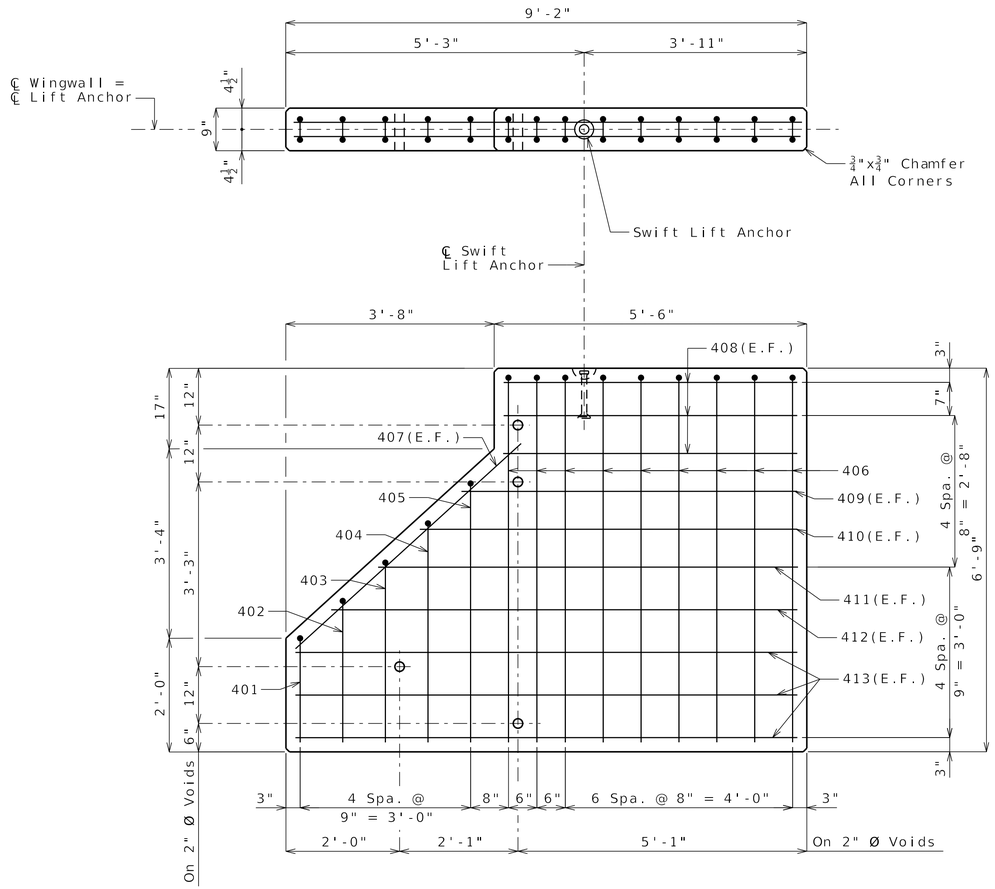

PRECAST WINGWALL

(2 Required)

REINFORCING STEEL SCHEDULE PRECAST WINGWALL									
MARK	BAR NO.	NO. REQ.	A(IN)	B(IN)	LENGTH FT	LENGTH IN.	TYPE	LOCATION	WEIGHT (LBS.)
401	4	1	22	5	4	1	4	Vertical	3
402	4	1	30	5	5	5	4	Vertical	4
403	4	1	38	5	6	9	4	Vertical	5
404	4	1	46	5	8	1	4	Vertical	5
405	4	1	54	5	9	5	4	Vertical	6
406	4	9	77	5	13	3	4	Vertical	80
407	4	2	-	-	5	2	STR.	Diagonal	7
408	4	6	-	-	5	2	STR.	Horizontal	21
409	4	2	-	-	5	11	STR.	Horizontal	8
410	4	2	-	-	6	8	STR.	Horizontal	9
411	4	2	-	-	7	4	STR.	Horizontal	10
412	4	2	-	-	8	2	STR.	Horizontal	11
413	4	6	-	-	8	10	STR.	Horizontal	35

BENDING DIAGRAM

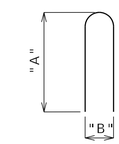

(Type 4)

* Quantities Per One Wingwall (2 Total Required).

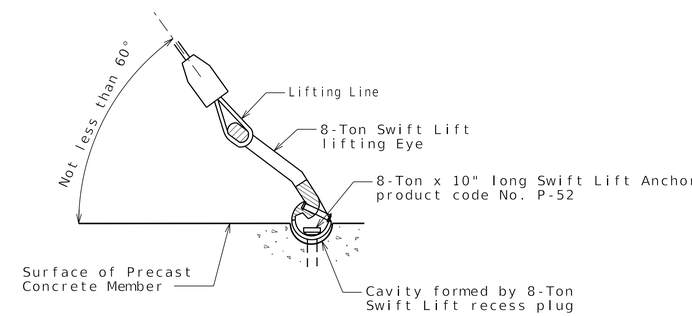

SWIFT LIFT DETAIL

8-Ton swift lift recess plugs, anchors and lifting. Eyes
are available from Dayton Superior. 721 Richard St. Miamisburg, Ohio 45342,
telephone (937) 866-0711.
Note: One (1) swift lift anchor required per wingwall.
Two (2) swift lift anchors required per pile bent cap.
Three (3) swift lift anchors required per abutment.

STATE OF MISSOURI
SEAN THOMAS COONEY
NUMBER
PE-2014007262
PROFESSIONAL ENGINEER
9-12-2025

DATE PREPARED 9/12/2025

ROUTE	STATE
I-70	MO
DISTRICT	SHEET NO.
BR	A5801T-12

COUNTY ST. CHARLES

JOB NO. JST0020

CONTRACT ID.

PROJECT NO.

BRIDGE NO. A5801T

DESCRIPTION	DATE

MISSOURI HIGHWAYS AND TRANSPORTATION COMMISSION
105 WEST CAPITOL
JEFFERSON CITY, MO 65102
1-888-ASK-MODOT (1-888-275-6636)

IMPROVE 70 ALLIANCE

HNTB 715 KIRK DRIVE KANSAS CITY, MO 64105-1310 CERTIFICATE OF AUTHORITY NO. 001270

Bartlett & West
601 MONROE ST., SUITE 201 - JEFFERSON CITY, MO 65101
(573) 634-2022 - FAX (573) 634-8021
CERTIFICATE OF AUTHORITY NO. 000107 - ENGINEERING
WWW.BARTLETTWEST.COM

Detailed JULY 2025
Checked JULY 2025

Note: This drawing is not to scale. Follow dimensions.

NOT FOR CONSTRUCTION

WINGWALL DETAILS

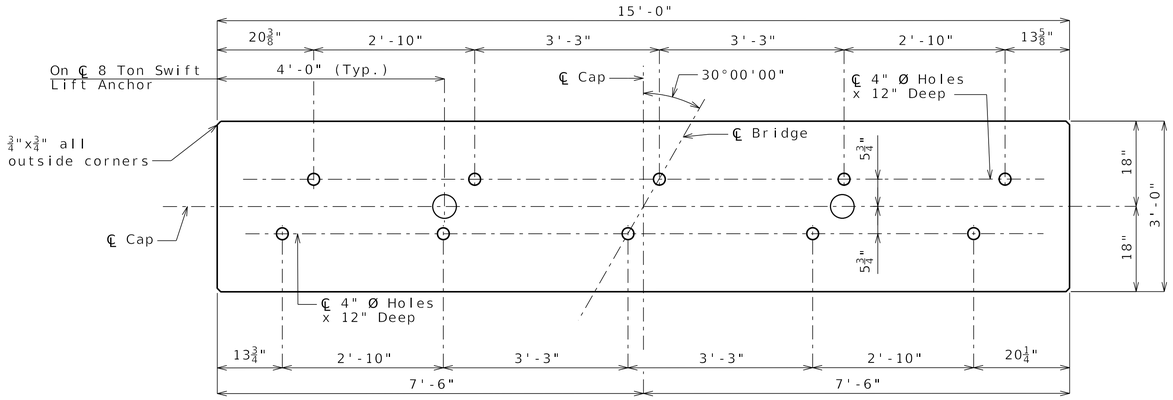

PLAN

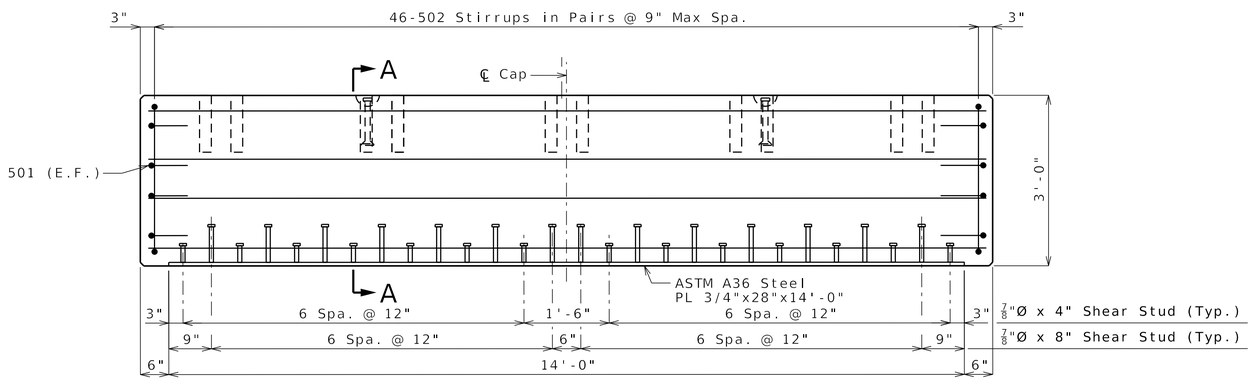

ELEVATION

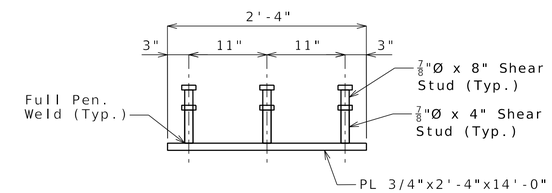

STUD AND PLATE LAYOUT

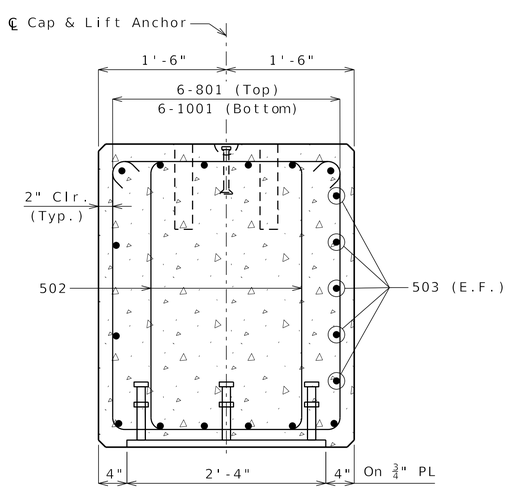

SECTION A-A

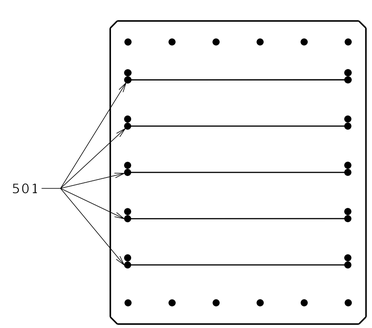

END VIEW

REINFORCING STEEL SCHEDULE PRECAST SINGLE BENT CAP

MARK	BAR NO.	NO. REQ.	LENGTH FT	LENGTH IN.	TYPE	LOCATION	WEIGHT (LBS.)
501	5	10	3	8	3	End Bar	38
502	5	46	9	9	2	Shear Stirrups	468
503	5	10	14	8	STR.	Horizontal Side	153
801	8	10	14	8	STR.	Horizontal Top	235
1001	10	6	14	8	STR.	Horizontal Bottom	379

BEDNING DIAGRAM

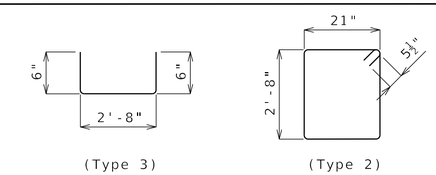

* Quantities are per Intermediate bent cap (5 total required)

Notes:

For swift lift anchor details see Sheet A5801T-012.

NOT FOR CONSTRUCTION

INTERMEDIATE BENT DETAILS (PILE BENT)

STATE OF MISSOURI
SEAN THOMAS COONEY
NUMBER PE-2014007262
PROFESSIONAL ENGINEER
9-12-2025

DATE PREPARED 9/12/2025

ROUTE	STATE
I-70	MO
DISTRICT	SHEET NO.
BR	A5801T-13

COUNTY: ST. CHARLES

JOB NO. JST0020

CONTRACT ID.

PROJECT NO.

BRIDGE NO. A5801T

DESCRIPTION | DATE

MISSOURI HIGHWAYS AND TRANSPORTATION COMMISSION
105 WEST CAPITOL
JEFFERSON CITY, MO 65102
1-888-ASK-MODOT (1-888-275-6636)

IMPROVE 70 ALLIANCE

HNTB
715 KIRK DRIVE
KANSAS CITY, MO 64105-1310
CERTIFICATE OF AUTHORITY NO. 001270

Bartlett & West
601 MONROE ST. SUITE 201 - JEFFERSON CITY, MO 65101
PHONE: (573) 634-2448
CERTIFICATE OF AUTHORITY NO. 000167 - ENGINEERING
WWW.BARTLETTWEST.COM

Detailed JULY 2025
Checked JULY 2025

Note: This drawing is not to scale. Follow dimensions.

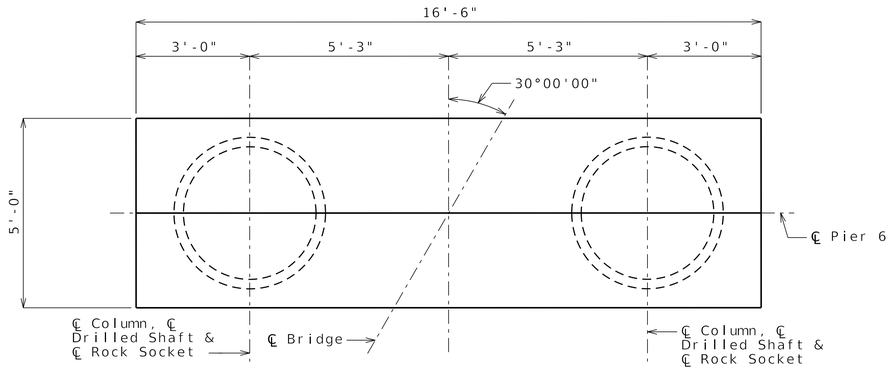

PLAN
(Pier 6 shown, Pier 7 similar)

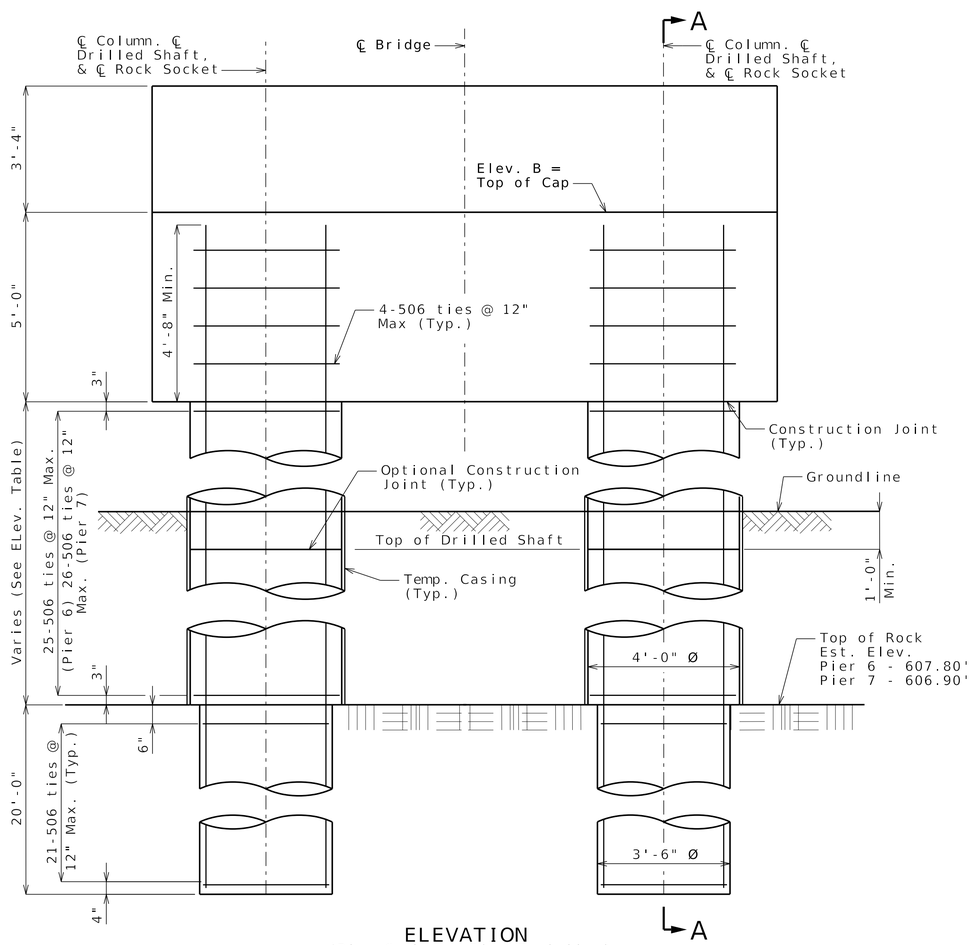

ELEVATION
(Pier 6 shown, Pier 7 similar)

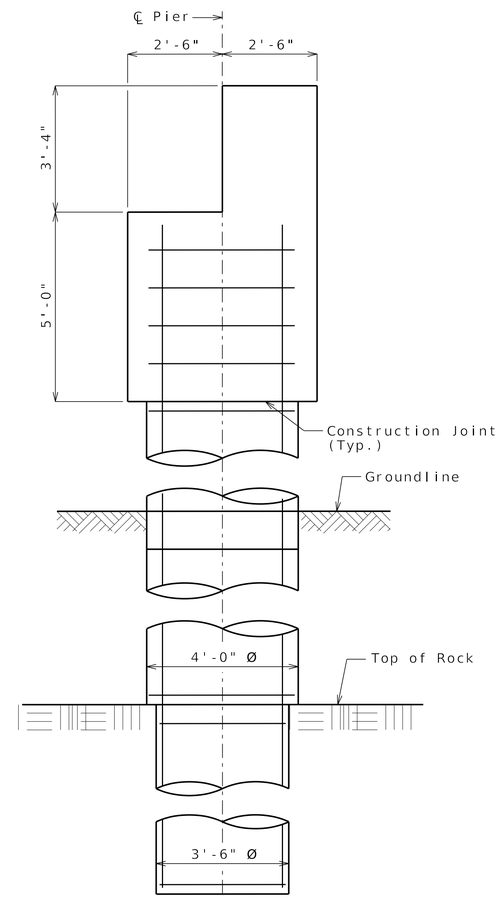

SECTION A-A

Notes:

Cover: 2" Chamfer all edges: $\frac{3}{4}$"x$\frac{3}{4}$" unless noted otherwise.

For column and drilled shaft sections, see Sheet No. A5801T-15

NOT FOR CONSTRUCTION
PIER DETAILS (DRILLED SHAFT)

STATE OF MISSOURI
SEAN THOMAS COONEY
NUMBER PE-2014007262
PROFESSIONAL ENGINEER
9-12-2025

DATE PREPARED	9/12/2025
ROUTE	I-70
STATE	MO
DISTRICT	BR
SHEET NO.	A5801T-14
COUNTY	ST. CHARLES
JOB NO.	JST0020
CONTRACT ID.	
PROJECT NO.	
BRIDGE NO.	A5801T

DESCRIPTION	DATE

MISSOURI HIGHWAYS AND TRANSPORTATION COMMISSION
105 WEST CAPITOL
JEFFERSON CITY, MO 65102
1-888-ASK-MODOT (1-888-275-6636)

IMPROVE 70 ALLIANCE

HNTB
715 KIRK DRIVE
KANSAS CITY, MO 64105-1310
CERTIFICATE OF AUTHORITY
NO. 001270

Bartlett & West
601 ROMAINE ST., SUITE 201 - JEFFERSON CITY, MO 65101
PHONE: 573-635-2627
CERTIFICATE OF AUTHORITY NO. 000707 - ENGINEERING
WWW.BARTLETTWEST.COM

Detailed JULY 2025
Checked JULY 2025

Note: This drawing is not to scale. Follow dimensions.

B_A5801T_014_JST0020_BENT2-1.dgn 3:53:27 PM 9/12/2025

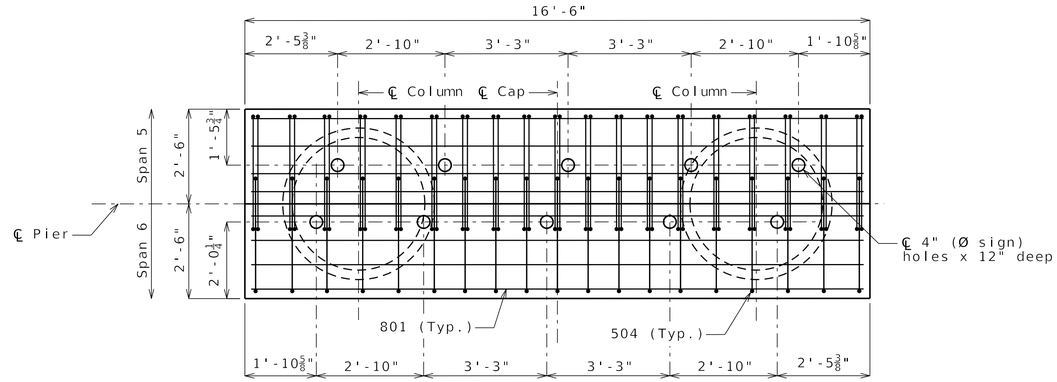

PIER CAP PLAN
(Pier 6 shown, Pier 7 similar)

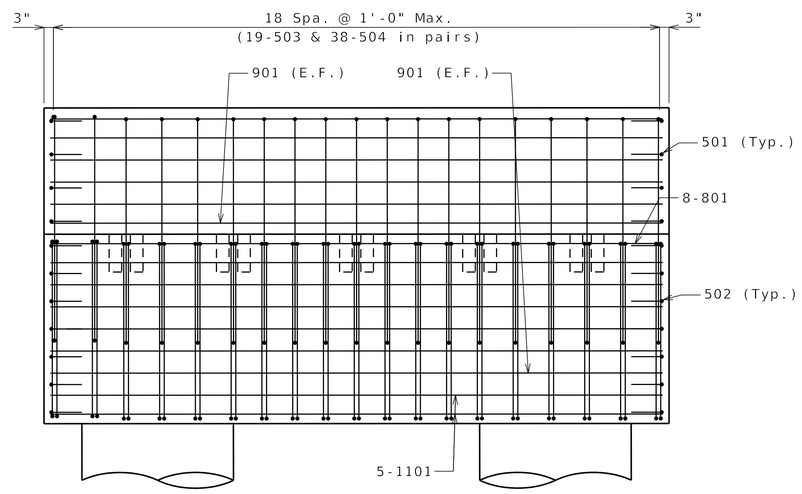

PIER CAP ELEVATION
(Pier 6 shown, Pier 7 similar)

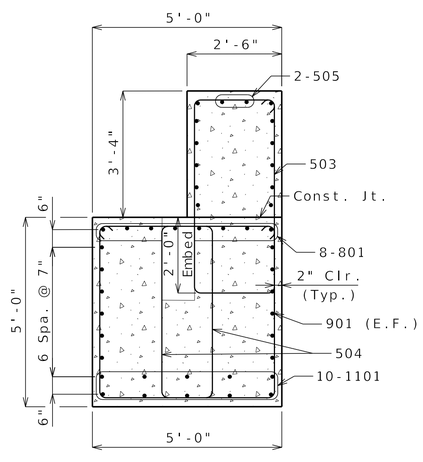

PIER CAP SECTION

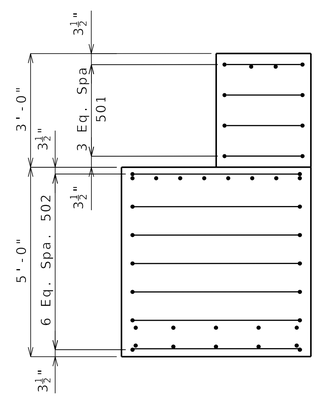

CAP END VIEW

REINFORCING STEEL SCHEDULE CAST-IN-PLACE COLUMN/DRILLED SHAFT PIER 6									
Mark	BAR No.	No. Req.	A(in)	B(in)	Length ft	Length in.	TYPE	LOCATION	WIEGHT (LBS.)
506	5	100	36	20	11	2	10	Shear Ties	1165
1102	11	36	-	-	48	8	STR.	Vertical Bars	9309
REINFORCING STEEL SCHEDULE CAST-IN-PLACE COLUMN/DRILLED SHAFT PIER 7									
506	5	102	36	20	11	2	10	Shear Ties	1188
1103	11	36	-	-	49	8	STR.	Vertical Bars	9500
REINFORCING STEEL SCHEDULE CAST-IN-PLACE PIER CAP									
501	5	8	6	26	3	2	3	End Bars	27
502	5	14	6	56	5	8	3	End Bars	83
503	5	19	62	26	15	7	2	Shear Stirrups	309
504	5	38	38	34	15	11	2	Shear Stirrups	631
505	5	2	-	-	16	2	STR.	Horizontal	34
801	8	8	-	-	16	2	STR.	Horizontal	346
901	9	24	-	-	16	2	STR.	Horizontal	1320
1101	11	10	-	-	16	2	STR.	Horizontal	859

BENDING DIAGRAM

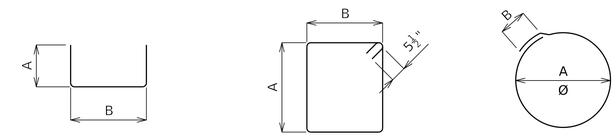

(Type 3) (Type 2) (Type 10)

* Cast-In-Place Pier Cap Quantities for one Pier Cap (2 Total Required).

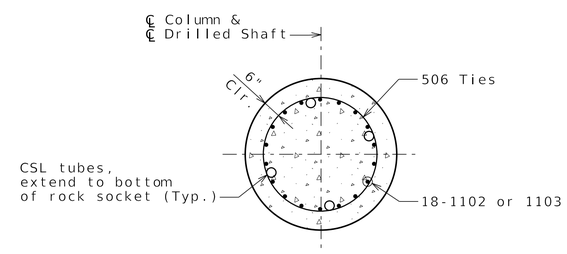

4'-0" Ø COLUMN
& DRILLED SHAFT

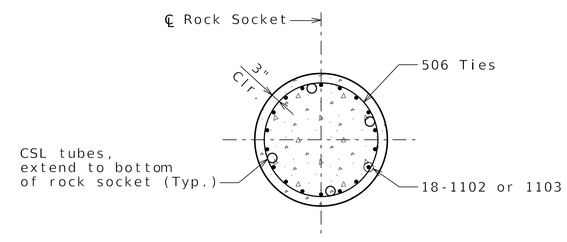

3'-6" Ø
ROCK SOCKET

Notes:

Cover: 2" Chamfer all edges: 3/4"x3/4".

NOT FOR CONSTRUCTION
COLUMN/DRILLED SHAFT DETAILS

STATE OF MISSOURI
SEAN THOMAS COONEY
NUMBER PE-2014007262
PROFESSIONAL ENGINEER
9-12-2025

DATE PREPARED: 9/12/2025
ROUTE: I-70 STATE: MO
DISTRICT: BR SHEET NO.: A5801T-15
COUNTY: ST. CHARLES
JOB NO.: JST0020
CONTRACT ID.
PROJECT NO.
BRIDGE NO.: A5801T

DESCRIPTION
DATE

MISSOURI HIGHWAYS AND TRANSPORTATION COMMISSION
105 WEST CAPITOL
JEFFERSON CITY, MO 65102
1-888-ASK-MODOT (1-888-275-6636)

IMPROVE 70 ALLIANCE

HNTB
715 KIRK DRIVE
KANSAS CITY, MO 64105-1310
CERTIFICATE OF AUTHORITY NO. 001270

Bartlett & West
601 MONROE ST.-SUITE 201 - JEFFERSON CITY, MO 65101
PHONE: (573) 634-2022 FAX: (573) 634-8291
CERTIFICATE OF AUTHORITY NO. 000107 - ENGINEERING
WWW.BARTLETTWEST.COM

Detailed JULY 2025
Checked JULY 2025

Note: This drawing is not to scale. Follow dimensions.

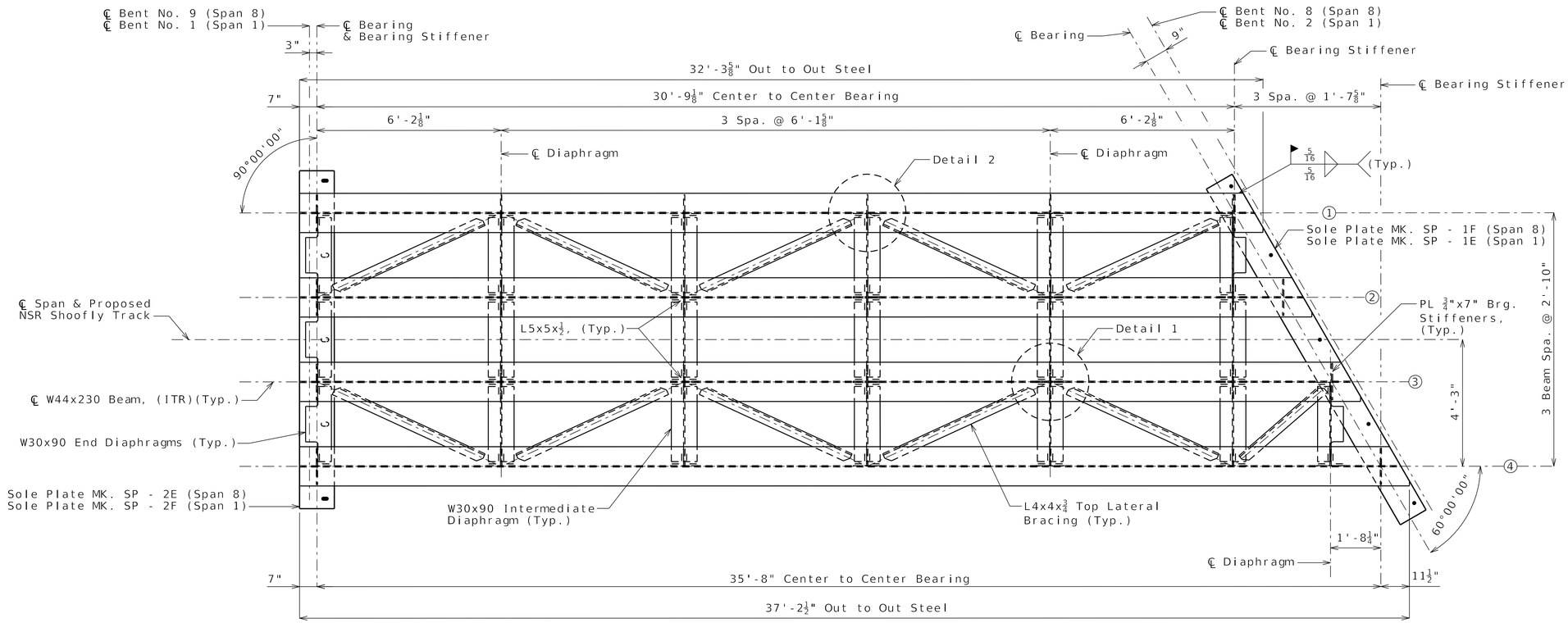

FRAMING PLAN - SPAN 8

Span 1 similar

Notes:

For additional notes, see Sheet No. A5801T-3.
For Beam Elevations, see Sheet No. A5801T-17.
For Details 1 and 2, see Sheet No. A5801T-21.
For Superstructure Details, see Sheet No. A5801T-21.

NOT FOR CONSTRUCTION
FRAMING PLAN - SPANS 1 & 8

Detailed JULY 2025
Checked JULY 2025

Note: This drawing is not to scale. Follow dimensions.

STATE OF MISSOURI
SEAN THOMAS COONEY
NUMBER
PE-2014007262
PROFESSIONAL ENGINEER
9-12-2025

DATE PREPARED	9/12/2025
ROUTE	I-70
STATE	MO
DISTRICT	BR
SHEET NO.	A5801T-16
COUNTY	ST. CHARLES
JOB NO.	JST0020
CONTRACT ID.	
PROJECT NO.	
BRIDGE NO.	A5801T

DESCRIPTION

DATE

MISSOURI HIGHWAYS AND TRANSPORTATION COMMISSION
105 WEST CAPITOL
JEFFERSON CITY, MO 65102
1-888-ASK-MODOT (1-888-275-6636)

IMPROVE 70 ALLIANCE

HNTB
715 KIRK DRIVE
KANSAS CITY, MO 64105-1310
CERTIFICATE OF AUTHORITY
NO. 001270

Bartlett & West
601 MONROE ST., SUITE 201 - JEFFERSON CITY, MO 65101
CERTIFICATE OF AUTHORITY NO. 000187 - ENGINEERING
WWW.BARTLETTWEST.COM

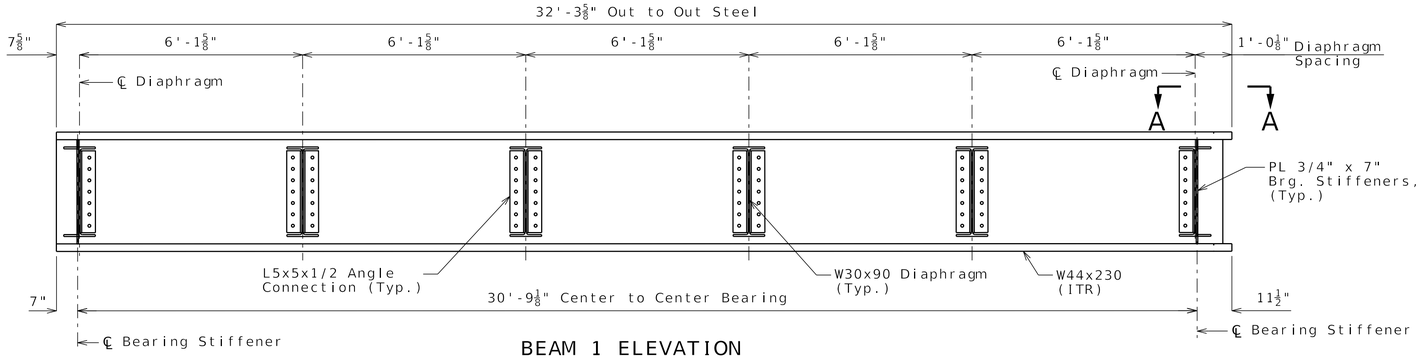

BEAM 1 ELEVATION

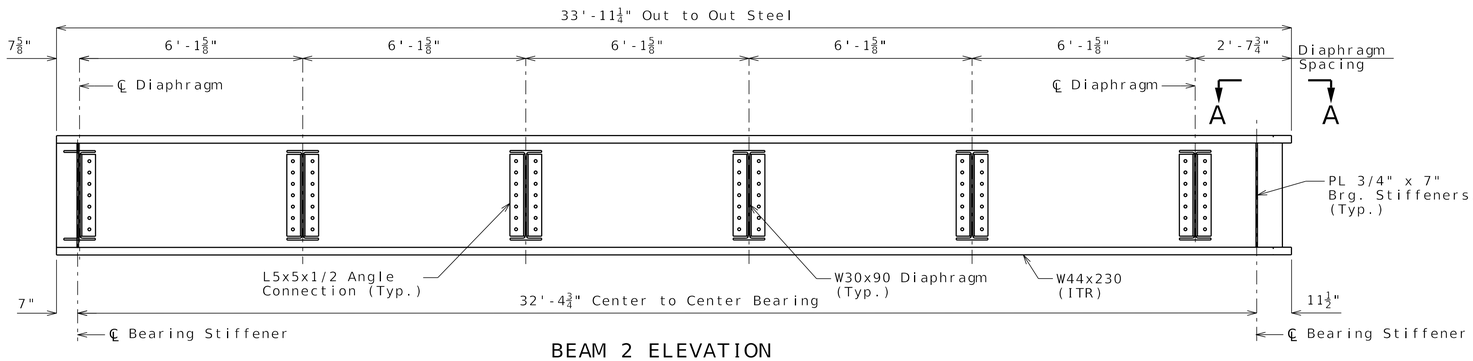

BEAM 2 ELEVATION

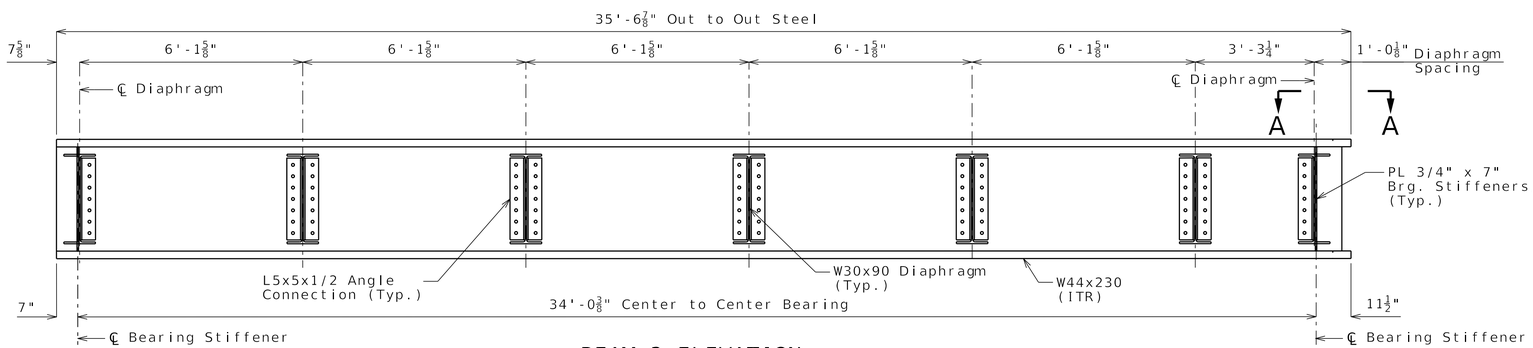

BEAM 3 ELEVATION

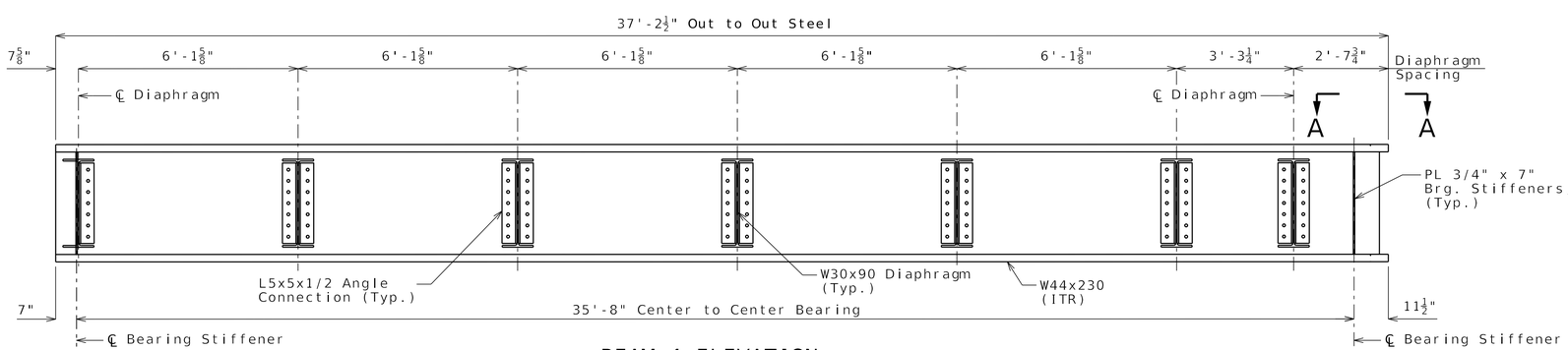

BEAM 4 ELEVATION

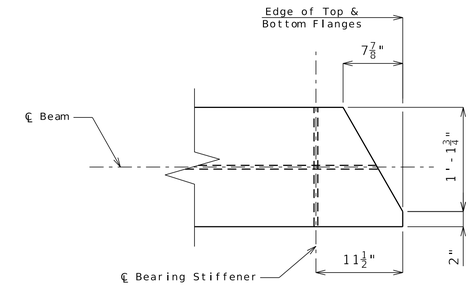

VIEW A-A

Notes:

For Additional Notes, see Sheet No. A5801T-3.

For Framing Plan, Spans 1 and 8, see Sheet No. A5801T-16.

For Superstructure Details, see Sheet Nos. A5801T-21.

NOT FOR CONSTRUCTION

BEAM ELEVATIONS - SPANS 1 & 8

Detailed JULY 2025
Checked JULY 2025

Note: This drawing is not to scale. Follow dimensions.

STATE OF MISSOURI
SEAN THOMAS COONEY
NUMBER PE-2014007262
PROFESSIONAL ENGINEER
9-12-2025

DATE PREPARED	9/12/2025
ROUTE	I-70
STATE	MO
DISTRICT	BR
SHEET NO.	A5801T-17
COUNTY	ST. CHARLES
JOB NO.	JST0020
CONTRACT ID.	
PROJECT NO.	
BRIDGE NO.	A5801T

DESCRIPTION

DATE

MISSOURI HIGHWAYS AND TRANSPORTATION COMMISSION
105 WEST CAPITOL
JEFFERSON CITY, MO 65102
1-888-ASK-MODOT (1-888-275-6636)

IMPROVE 70 ALLIANCE

HNTB
715 KIRK DRIVE
KANSAS CITY, MO 64105-1310
CERTIFICATE OF AUTHORITY NO. 001270

Bartlett & West
601 MONROE ST., SUITE 211 - JEFFERSON CITY, MO 65101
PHONE: 573-634-2022
CERTIFICATE OF AUTHORITY NO. 000167 - ENGINEERING
WWW.BARTLETTWEST.COM

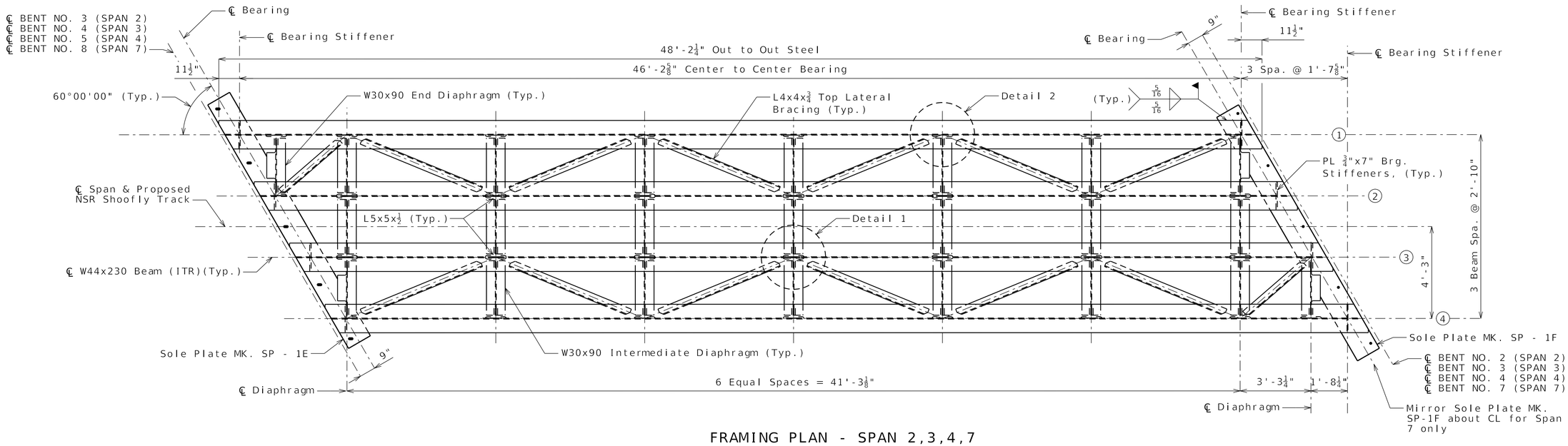

FRAMING PLAN - SPAN 2,3,4,7

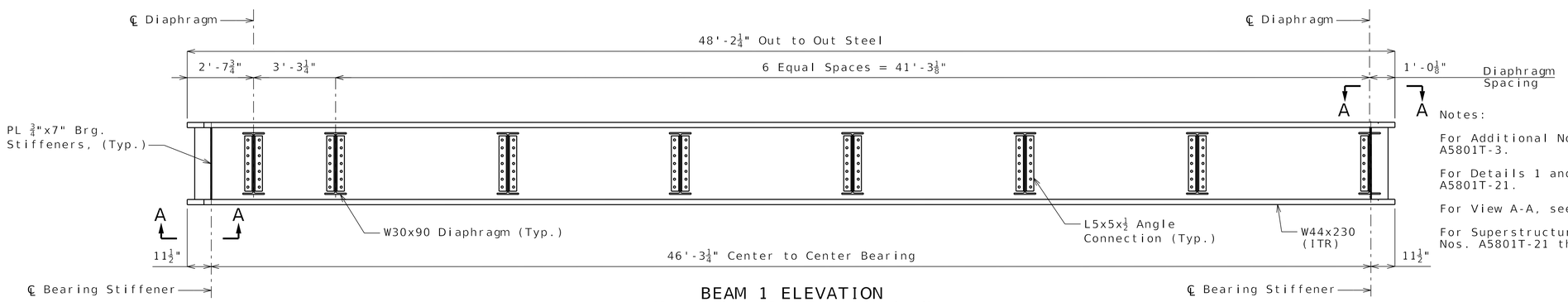

BEAM 1 ELEVATION
(Beam 1 shown. Beam 4 opposite hand)

Notes:

For Additional Notes, see Sheet No. A5801T-3.

For Details 1 and 2, see Sheet No. A5801T-21.

For View A-A, see Sheet No. A5801T-17.

For Superstructure Details, see Sheet Nos. A5801T-21 thru A5801T-23.

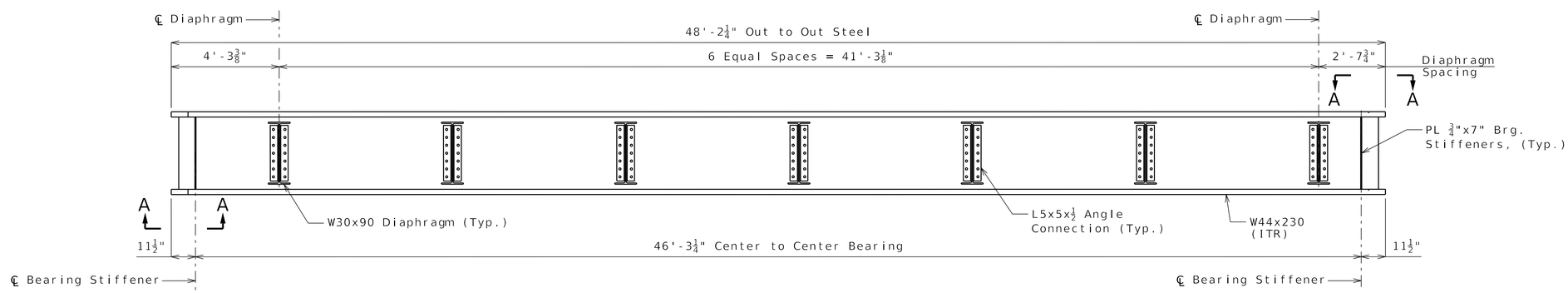

BEAM 2 ELEVATION
(Beam 2 shown. Beam 3 opposite hand)

NOT FOR CONSTRUCTION

FRAMING PLAN AND BEAM ELEVATIONS - SPANS 2,3,4, & 7

Detailed JULY 2025
Checked JULY 2025

Note: This drawing is not to scale. Follow dimensions.

STATE OF MISSOURI
SEAN THOMAS COONEY
NUMBER PE-2014007262
PROFESSIONAL ENGINEER
9-12-2025

DATE PREPARED	9/12/2025
ROUTE	I-70
STATE	MO
DISTRICT	BR
SHEET NO.	A5801T-18
COUNTY	ST. CHARLES
JOB NO.	JST0020
CONTRACT ID.	
PROJECT NO.	
BRIDGE NO.	A5801T

DESCRIPTION

DATE

MISSOURI HIGHWAYS AND TRANSPORTATION COMMISSION
105 WEST CAPITOL
JEFFERSON CITY, MO 65102
1-888-ASK-MODOT (1-888-275-6636)

IMPROVE 70 ALLIANCE

HNTB
715 KIRK DRIVE
KANSAS CITY, MO 64105-1310
CERTIFICATE OF AUTHORITY NO. 001270

Bartlett & West
601 MONROE ST., SUITE 201 - JEFFERSON CITY, MO 65101
PHONE: (573) 634-2022
CERTIFICATE OF AUTHORITY NO. 000107 - ENGINEERING
WWW.BARTLETTWEST.COM

B_A5801T_018_JST0020_FRMG2-4&7.dgn 3:53:41 PM 9/12/2025

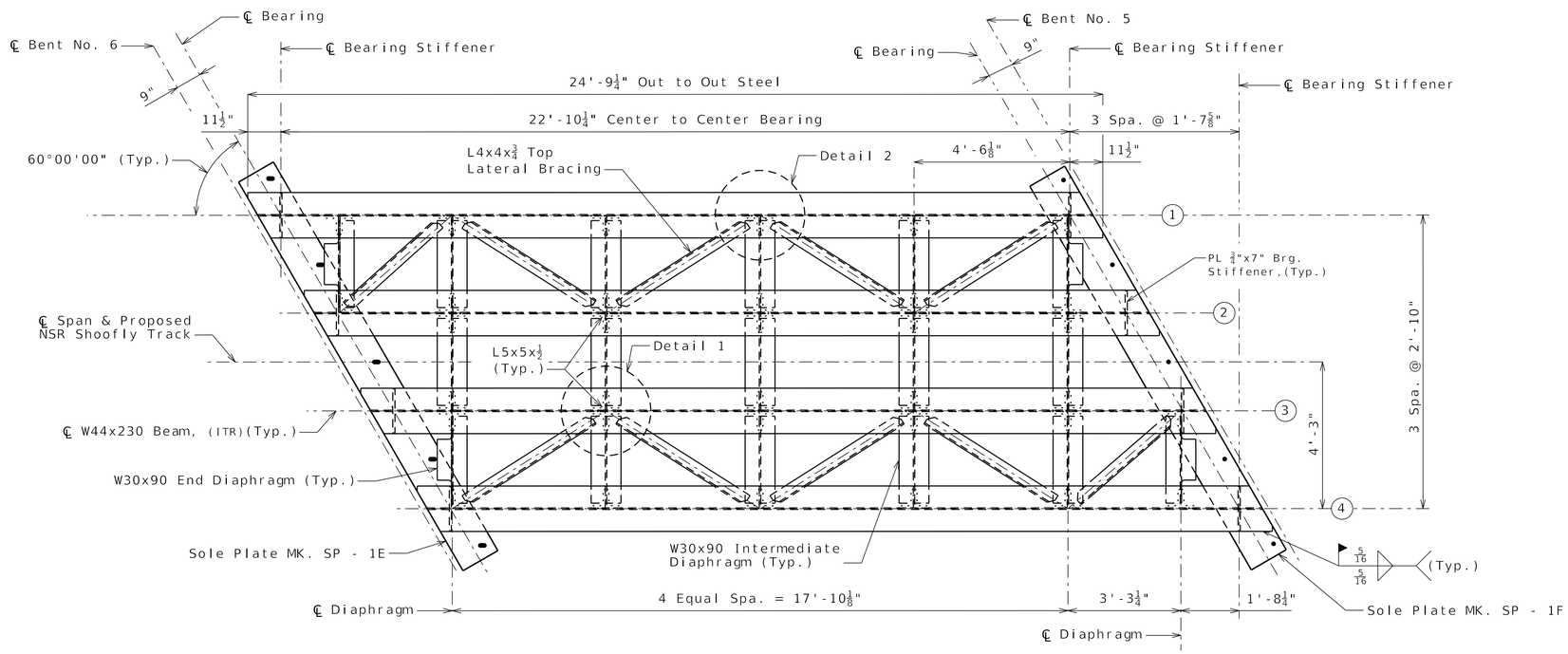

FRAMING PLAN - SPAN 5

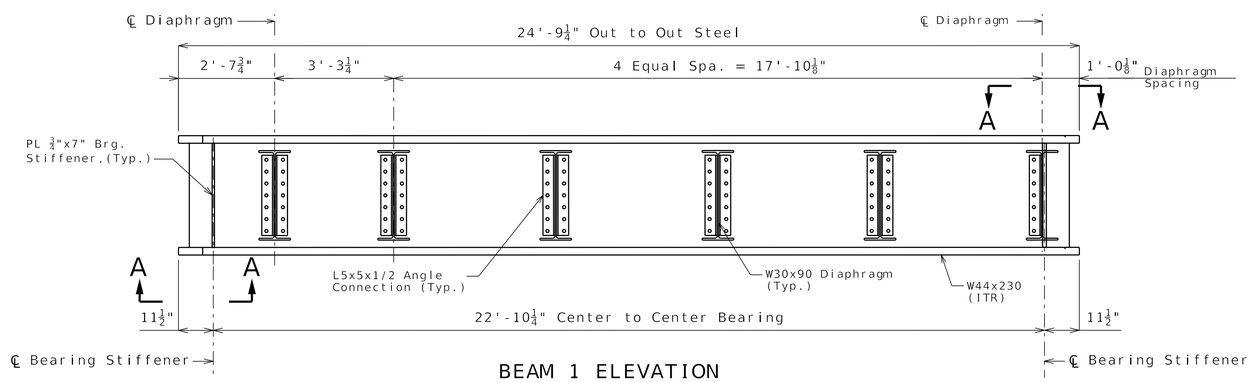

BEAM 1 ELEVATION
(Beam 1 Shown. Beam 4 opposite hand)

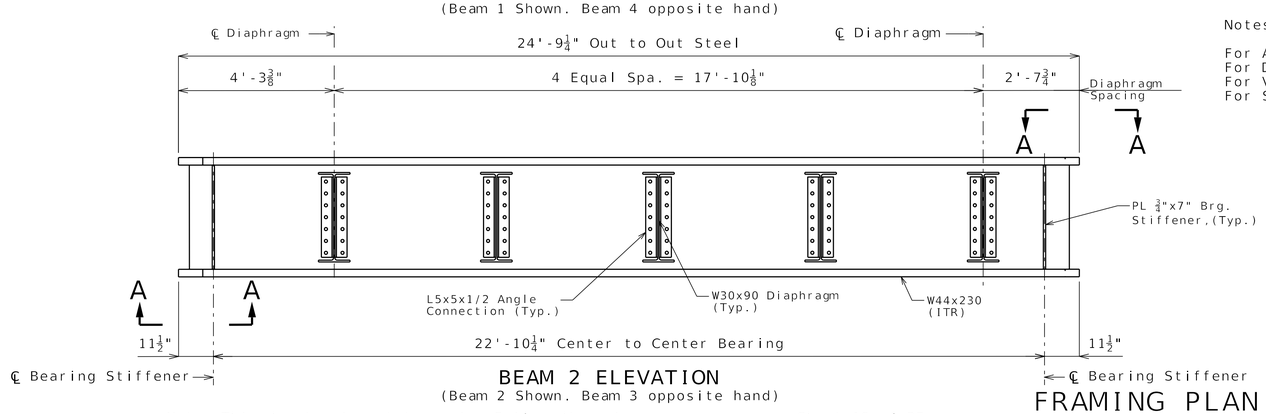

BEAM 2 ELEVATION
(Beam 2 Shown. Beam 3 opposite hand)

Notes:

For Additional Notes, see Sheet No. A5801T-3
For Details 1 and 2, see Sheet No. A5801T-21
For View A-A, see Sheet No. A5801T-17
For Superstructure Details, see Sheet No. A5801T-21

NOT FOR CONSTRUCTION

FRAMING PLAN AND BEAM ELEVATIONS - SPAN 5

Detailed JULY 2025
Checked JULY 2025

Note: This drawing is not to scale. Follow dimensions.

STATE OF MISSOURI
SEAN THOMAS COONEY
NUMBER
PE-2014007262
PROFESSIONAL ENGINEER
9-12-2025

DATE PREPARED	9/12/2025
ROUTE	I-70
STATE	MO
DISTRICT	BR
SHEET NO.	A5801T-19
COUNTY	ST. CHARLES
JOB NO.	JST0020
CONTRACT ID.	
PROJECT NO.	
BRIDGE NO.	A5801T

DESCRIPTION

DATE

MISSOURI HIGHWAYS AND TRANSPORTATION COMMISSION
105 WEST CAPITOL
JEFFERSON CITY, MO 65102
1-888-ASK-MODOT (1-888-275-6636)

IMPROVE 70 ALLIANCE

HNTB
715 KIRK DRIVE
KANSAS CITY, MO 64105-1310
CERTIFICATE OF AUTHORITY
NO. 001270

Bartlett & West
601 MONROE ST, SUITE 201 • JEFFERSON CITY, MO 65101
(573) 634-2022 • FAX (573) 634-8693
CERTIFICATE OF AUTHORITY NO. 000107 - ENGINEERING
WWW.BARTLETTWEST.COM

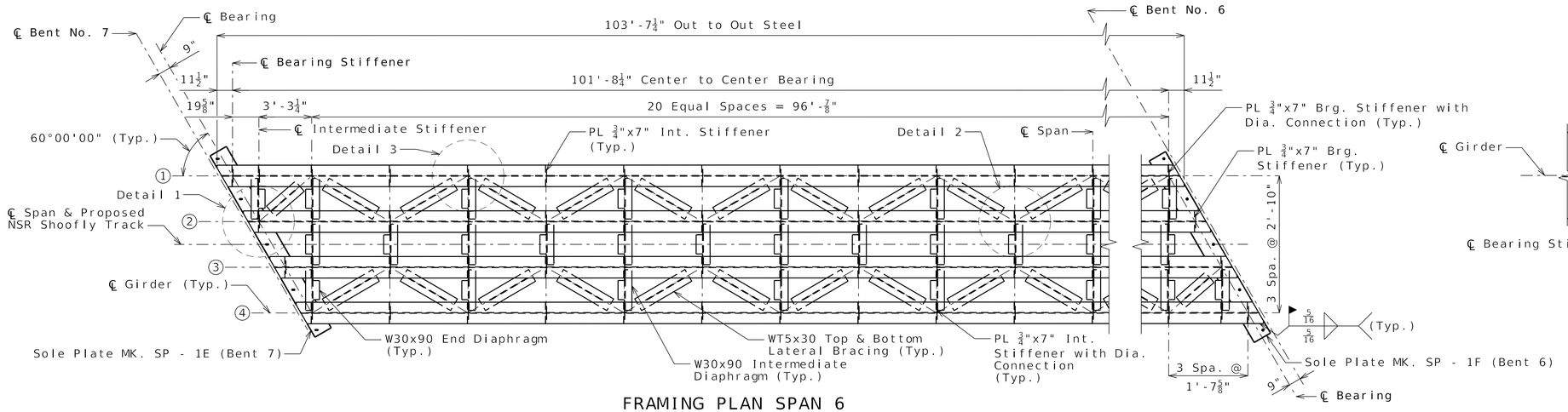

FRAMING PLAN SPAN 6

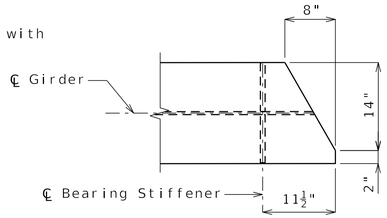

VIEW A-A

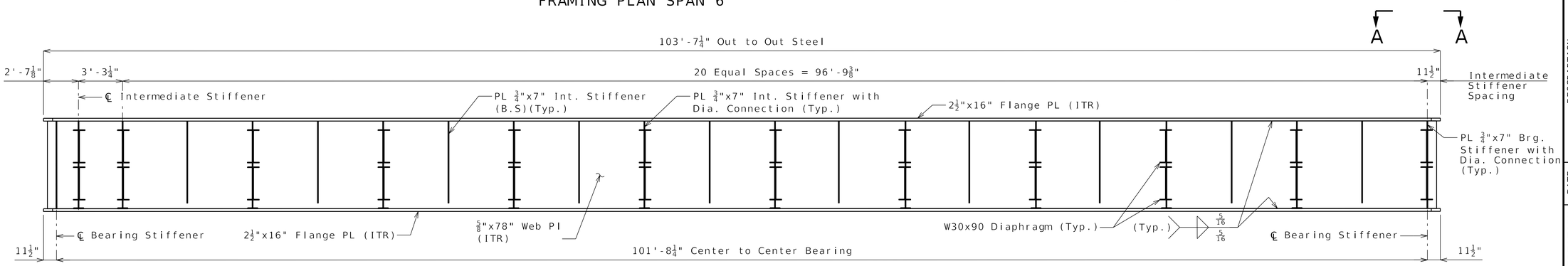

Girder 1 ELEVATION
(Girder 1 Shown. Girder 4 opposite hand)

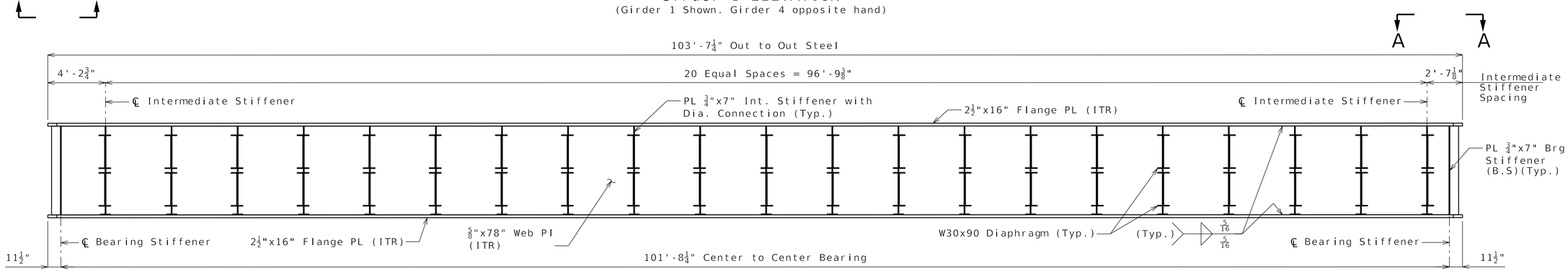

Girder 2 ELEVATION
(Girder 2 Shown. Girder 3 opposite hand)

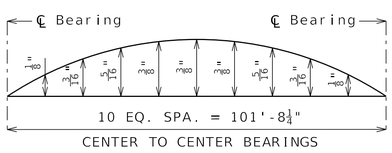

SHOP CAMBER DIAGRAM
Span 6 Cambered for Dead Load

Notes:

For Additional Notes, see Sheet No. A5801T-3
For Details 1, 2 and 3, see Sheet No.A5801T-23
For Superstructure Details, see Sheet Nos. A5801T-22 and A5801T-23

NOT FOR CONSTRUCTION
FRAMING PLAN AND GIRDER ELEVATIONS - SPAN 6

Detailed JULY 2025
Checked JULY 2025

Note: This drawing is not to scale. Follow dimensions.

STATE OF MISSOURI
SEAN THOMAS COONEY
NUMBER PE-2014007262
PROFESSIONAL ENGINEER
9-12-2025

DATE PREPARED	9/12/2025
ROUTE	I-70
STATE	MO
DISTRICT	BR
SHEET NO.	A5801T-20
COUNTY	ST. CHARLES
JOB NO.	JST0020
CONTRACT ID.	
PROJECT NO.	
BRIDGE NO.	A5801T

DESCRIPTION

DATE

MISSOURI HIGHWAYS AND TRANSPORTATION COMMISSION
105 WEST CAPITOL
JEFFERSON CITY, MO 65102
1-888-ASK-MODOT (1-888-275-6636)

IMPROVE 70 ALLIANCE

HNTB
715 KIRK DRIVE
KANSAS CITY, MO 64105-1310
CERTIFICATE OF AUTHORITY NO. 001270

Bartlett & West
601 MONROE ST., SUITE 201 - JEFFERSON CITY, MO 65101
(573) 634-2022 - FAX (573) 634-2026
WWW.BARTLETTWEST.COM
CERTIFICATE OF AUTHORITY NO. 000107 - ENGINEERING

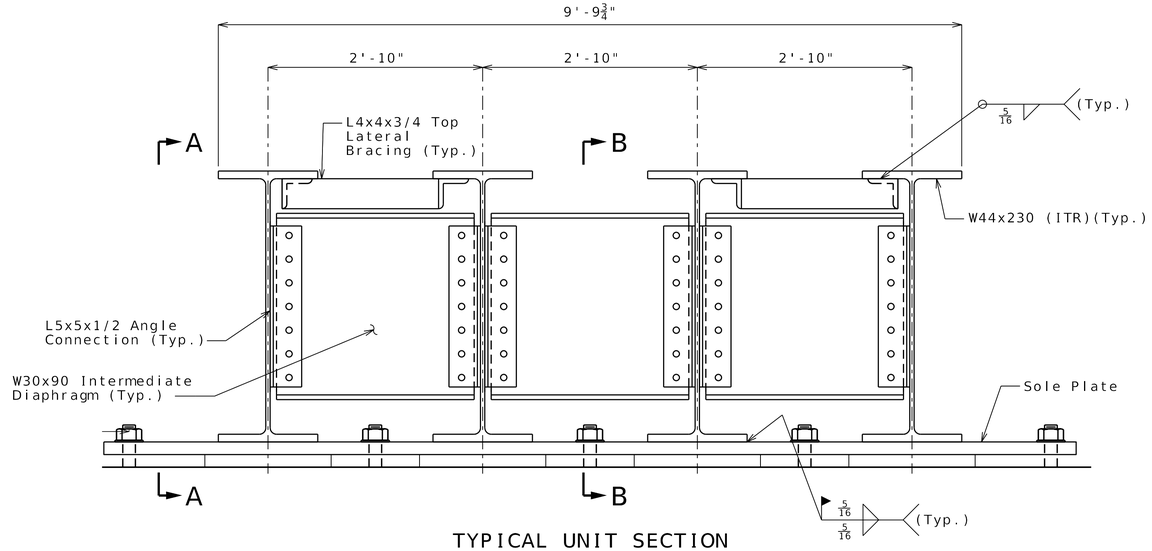

TYPICAL UNIT SECTION
SPAN 1-5,7, & 8

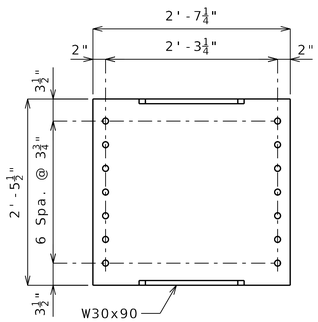

INTERMEDIATE DIAPHRAGM

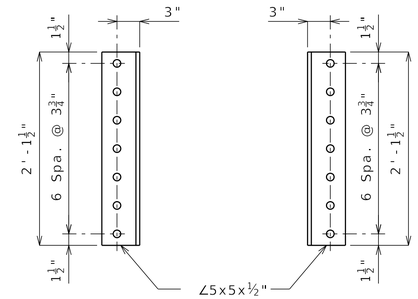

ANGLE CONNECTION

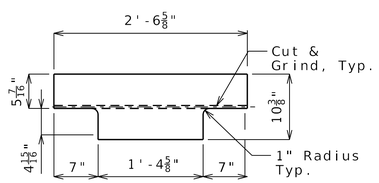

END DIAPHRAGM FLANGE COPING

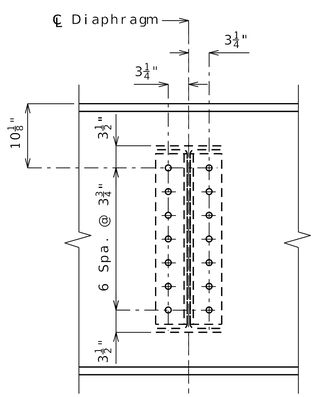

SECTION A-A

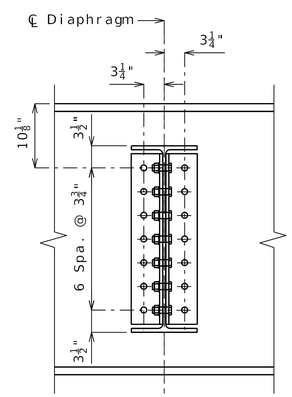

SECTION B-B

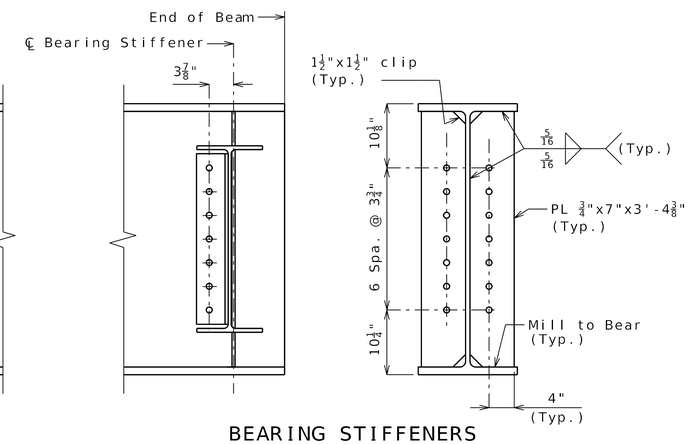

BEARING STIFFENERS

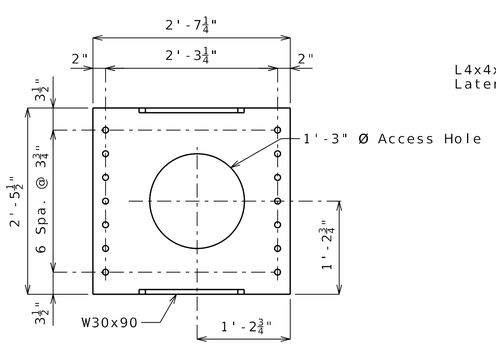

END DIAPHRAGM

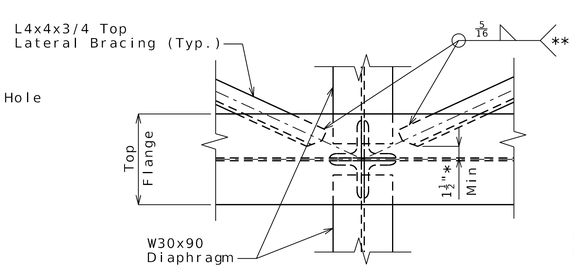

DETAIL 1
(Top lateral bracing connection)

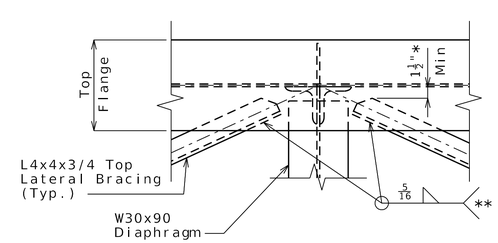

DETAIL 2
(Top lateral bracing connection)

Notes:

For additional notes, see Sheet No. A5801T-3.

For Bearing Details, see sheet No. A5801T-25.

* Dimension is from toe of web-flange to toe of flange-top lateral bracing weld.

** Terminate top lateral bracing welds ¼" +/- ⅛" from the beam top flange edge.

NOT FOR CONSTRUCTION

SUPERSTRUCTURE DETAILS 1 - SPANS 1,2,3,4,5,7, & 8

Detailed JULY 2025
Checked JULY 2025

Note: This drawing is not to scale. Follow dimensions.

STATE OF MISSOURI
SEAN THOMAS COONEY
NUMBER PE-2014007262
PROFESSIONAL ENGINEER
9-12-2025

DATE PREPARED	9/12/2025
ROUTE	I-70
STATE	MO
DISTRICT	BR
SHEET NO.	A5801T-21
COUNTY	ST. CHARLES
JOB NO.	JST0020
CONTRACT ID.	
PROJECT NO.	
BRIDGE NO.	A5801T

DESCRIPTION

DATE

MISSOURI HIGHWAYS AND TRANSPORTATION COMMISSION
105 WEST CAPITOL
JEFFERSON CITY, MO 65102
1-888-ASK-MODOT (1-888-275-6636)

IMPROVE 70 ALLIANCE

HNTB
715 KIRK DRIVE
KANSAS CITY, MO 64105-1310
CERTIFICATE OF AUTHORITY NO. 001270

Bartlett & West
601 MONROE ST, SUITE 201 • JEFFERSON CITY, MO 65101
TEL: (573) 634-2448 • FAX: (573) 634-8693
CERTIFICATE OF AUTHORITY NO. 000107 • ENGINEERING
WWW.BARTLETTWEST.COM

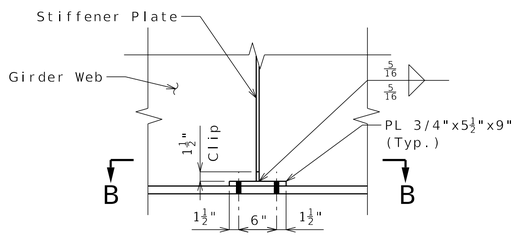

VIEW A-A

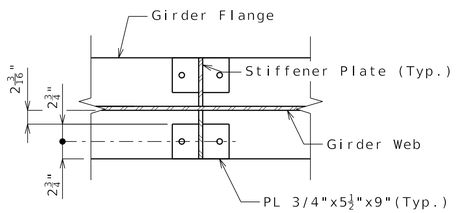

VIEW B-B

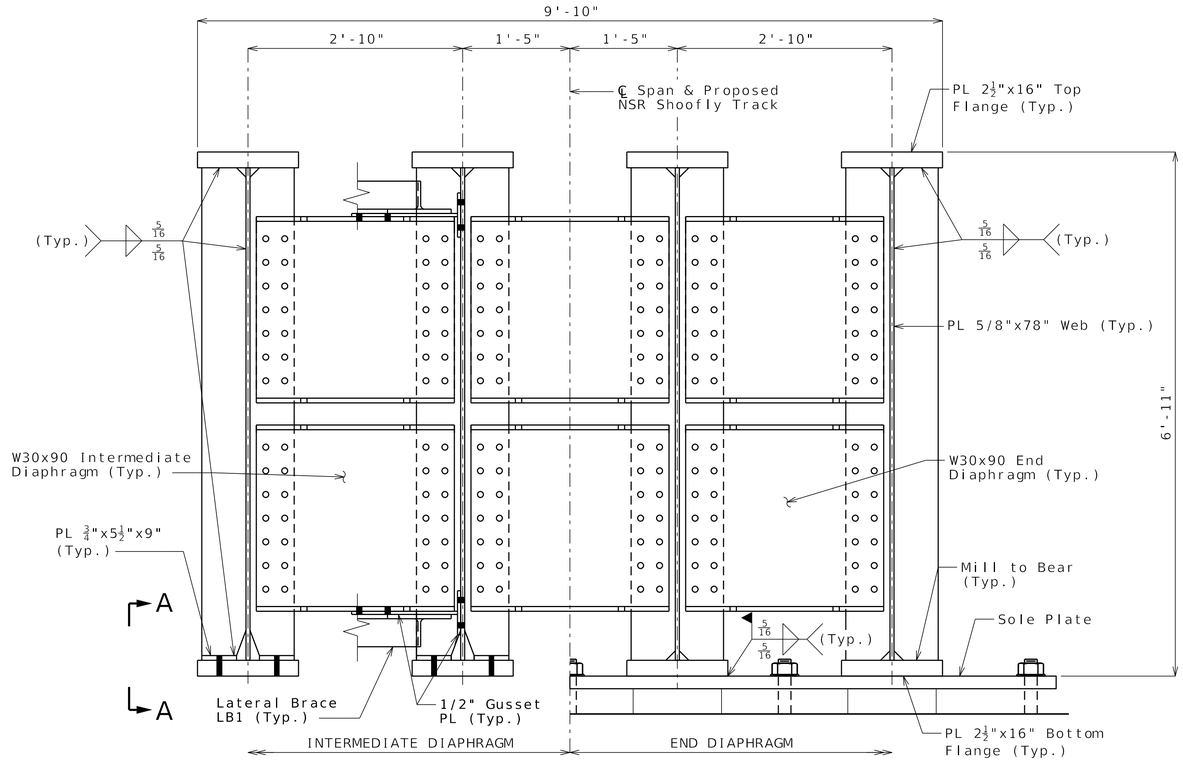

TYPICAL UNIT SECTION

Span 6

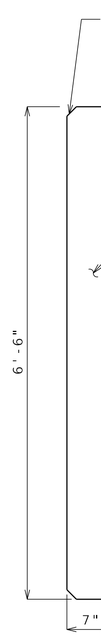

BEARING STIFFENER

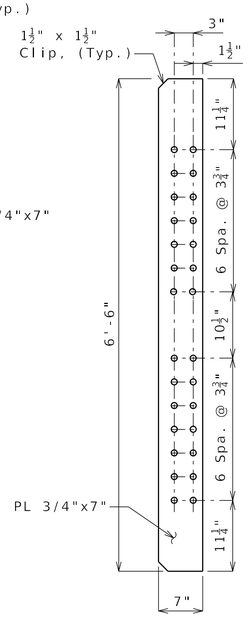

BEARING STIFFENER WITH DIAPHRAGM CONNECTION

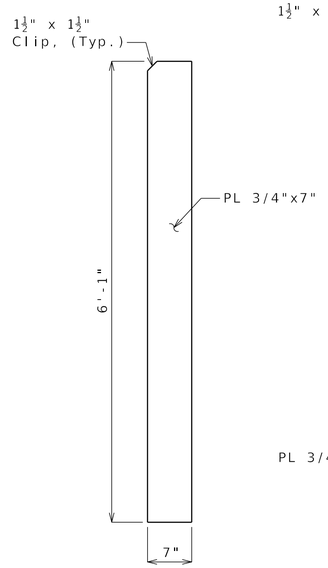

INTERMEDIATE STIFFENER

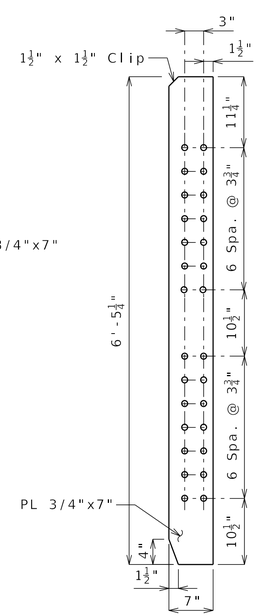

INTERMEDIATE STIFFENER WITH DIAPHRAGM CONNECTION

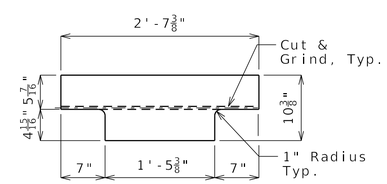

DIAPHRAGM FLANGE COPING

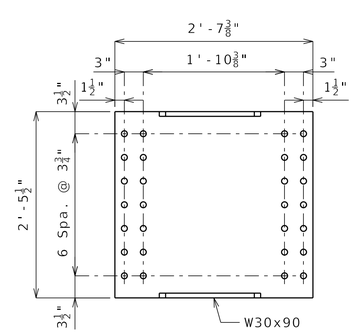

TYPICAL DIAPHRAGM

Notes:

For Additional Notes, see Sheet No. A5801T-3

For Lateral Bracing and Connection Details, see Sheet No. A5801T-23

For Bearing Details, see Sheet No. A5801T-25

NOT FOR CONSTRUCTION

SUPERSTRUCTURE DETAILS 2 - SPAN 6

Detailed JULY 2025
Checked JULY 2025

Note: This drawing is not to scale. Follow dimensions.

STATE OF MISSOURI
SEAN THOMAS COONEY
NUMBER PE-2014007262
PROFESSIONAL ENGINEER
9-12-2025

DATE PREPARED	9/12/2025
ROUTE	I-70
STATE	MO
DISTRICT	BR
SHEET NO.	A5801T-22
COUNTY	ST. CHARLES
JOB NO.	JST0020
CONTRACT ID.	
PROJECT NO.	
BRIDGE NO.	A5801T

DESCRIPTION

DATE

MISSOURI HIGHWAYS AND TRANSPORTATION COMMISSION

105 WEST CAPITOL
JEFFERSON CITY, MO 65102
1-888-ASK-MODOT (1-888-275-6636)

IMPROVE 70 ALLIANCE

HNTB
715 KIRK DRIVE
KANSAS CITY, MO 64105-1310
CERTIFICATE OF AUTHORITY NO. 001270

Bartlett & West
601 MONROE ST., SUITE 201 - JEFFERSON CITY, MO 65101
(573) 893-1911 FAX: (573) 893-1977
CERTIFICATE OF AUTHORITY NO. 000107 - ENGINEERING
WWW.BARTLETTWEST.COM

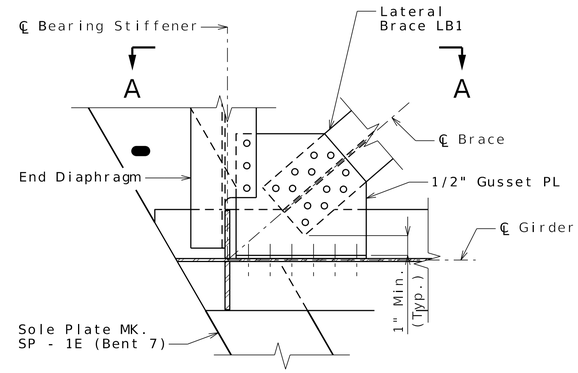

DETAIL 1
(Bottom lateral bracing shown, top lateral bracing similar)

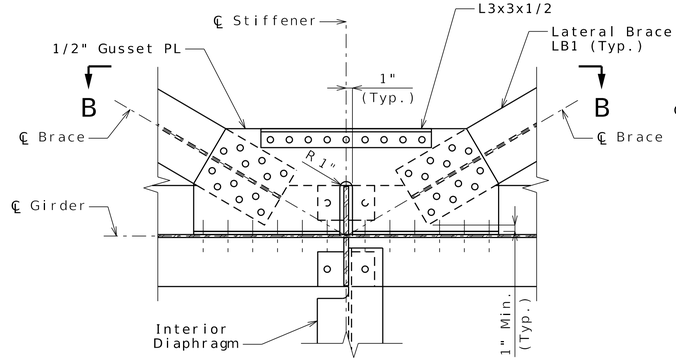

DETAIL 2
(Bottom lateral bracing shown, top lateral bracing similar)

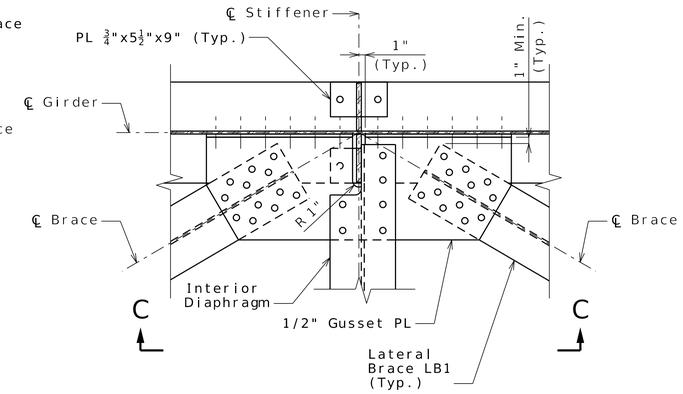

DETAIL 3
(Bottom lateral bracing shown, top lateral bracing similar)

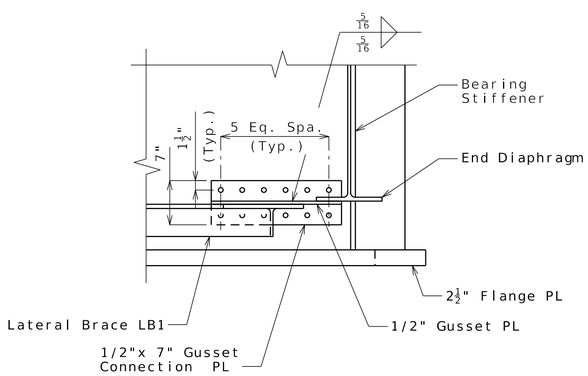

Section A-A

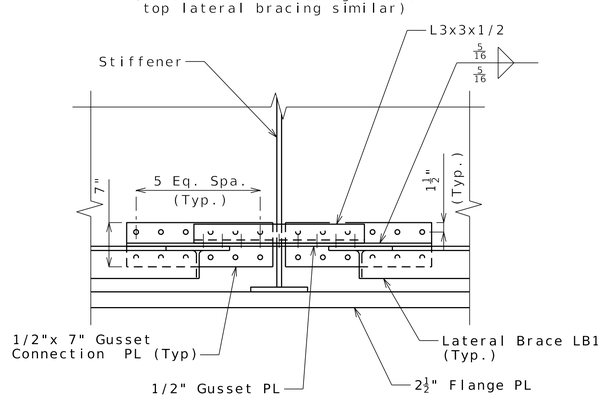

Section B-B

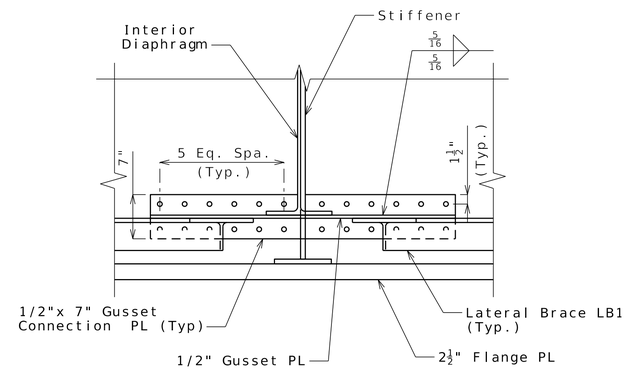

Section C-C

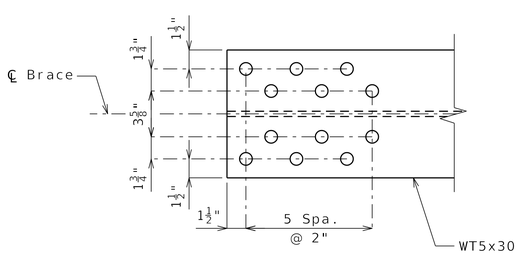

LATERAL BRACE LB1

Note:

Bolt spacing and edge distances shall meet AREMA Chapter 15 requirements.

NOT FOR CONSTRUCTION
SUPERSTRUCTURE DETAILS 3 - SPAN 6

Detailed JULY 2025
Checked JULY 2025

Note: This drawing is not to scale. Follow dimensions.

STATE OF MISSOURI
SEAN THOMAS COONEY
NUMBER PE-2014007262
PROFESSIONAL ENGINEER
9-12-2025

DATE PREPARED	9/12/2025
ROUTE	I-70
STATE	MO
DISTRICT	BR
SHEET NO.	A5801T-23
COUNTY	ST. CHARLES
JOB NO.	JST0020
CONTRACT ID.	
PROJECT NO.	
BRIDGE NO.	A5801T

DESCRIPTION

DATE

MISSOURI HIGHWAYS AND TRANSPORTATION COMMISSION
105 WEST CAPITOL
JEFFERSON CITY, MO 65102
1-888-ASK-MODOT (1-888-275-6636)

IMPROVE 70 ALLIANCE

HNTB
715 KIRK DRIVE
KANSAS CITY, MO 64105-1310
CERTIFICATE OF AUTHORITY
NO. 001270

Bartlett & West
601 MONROE ST., SUITE 201 - JEFFERSON CITY, MO 65101
PHONE: (573) 634-2022
CERTIFICATE OF AUTHORITY NO. 000167 - ENGINEERING
WWW.BARTLETTWEST.COM

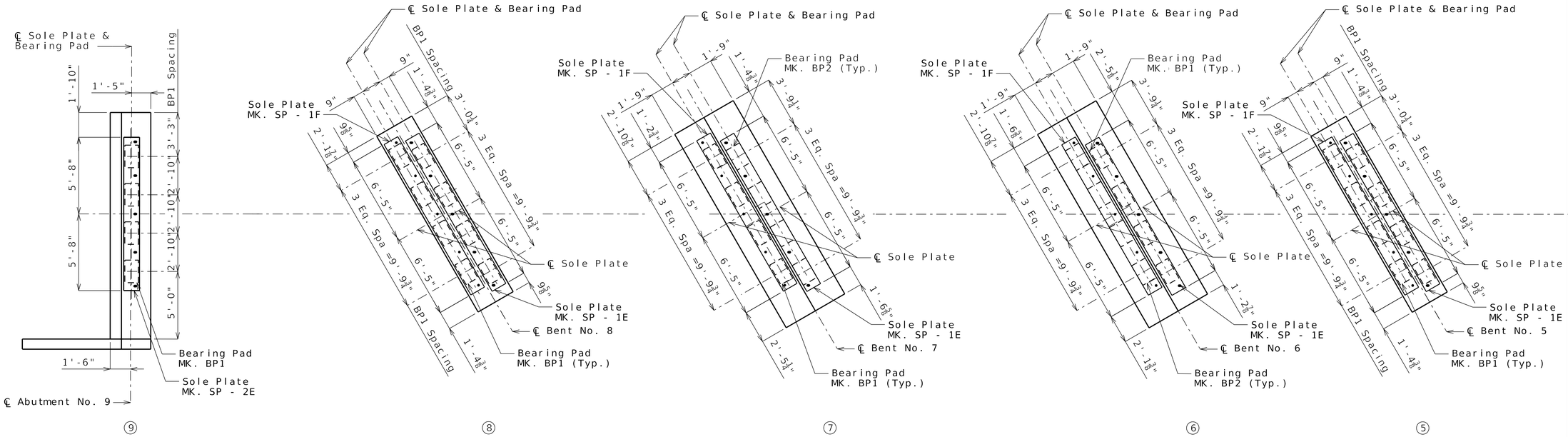

BEARING LAYOUT

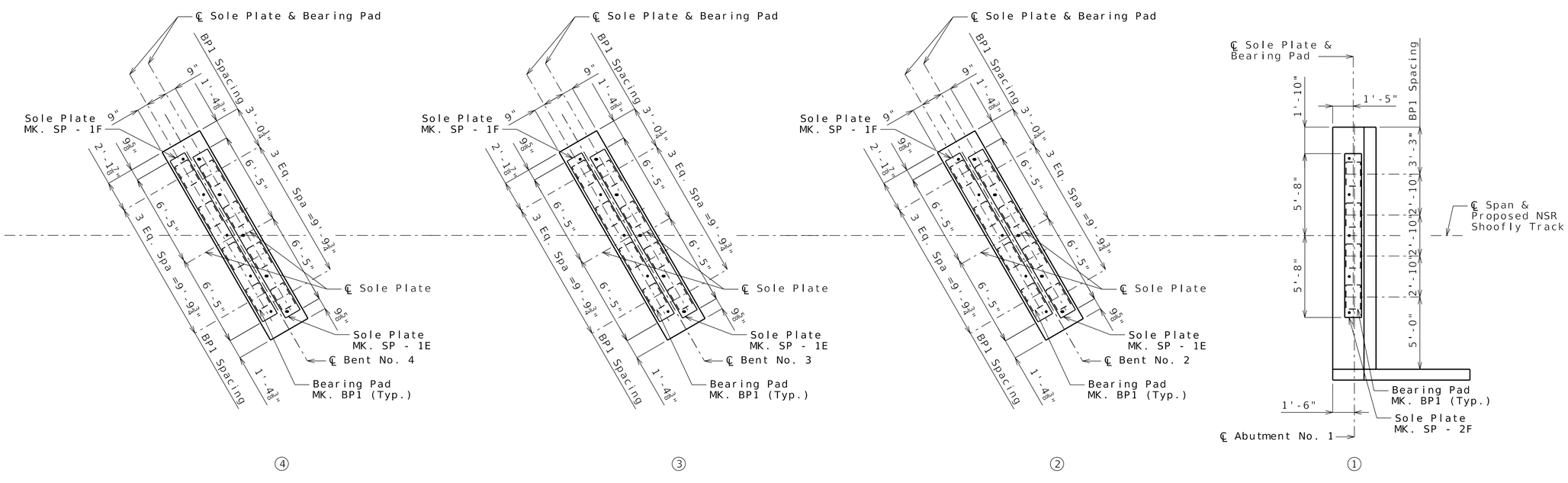

BEARING LAYOUT

NOT FOR CONSTRUCTION
BEARING LAYOUT

Detailed JULY 2025
Checked JULY 2025

Note: This drawing is not to scale. Follow dimensions.

STATE OF MISSOURI
SEAN THOMAS COONEY
NUMBER PE-2014007262
PROFESSIONAL ENGINEER
9-12-2025

DATE PREPARED	9/12/2025
ROUTE	I-70
STATE	MO
DISTRICT	BR
SHEET NO.	A5801T-24
COUNTY	ST. CHARLES
JOB NO.	JST0020
CONTRACT ID.	
PROJECT NO.	
BRIDGE NO.	A5801T

DESCRIPTION | DATE

MISSOURI HIGHWAYS AND TRANSPORTATION COMMISSION
105 WEST CAPITOL
JEFFERSON CITY, MO 65102
1-888-ASK-MODOT (1-888-275-6636)

IMPROVE 70 ALLIANCE

HNTB
715 KIRK DRIVE
KANSAS CITY, MO 64105-1310
CERTIFICATE OF AUTHORITY
NO. 001270

Bartlett & West
601 MONROE ST., SUITE 201 - JEFFERSON CITY, MO 65101
PHONE: (573) 634-2448 FAX: (573) 634-8291
CERTIFICATE OF AUTHORITY NO. 000107 - ENGINEERING
PHONE: (816) 931-7700 FAX: (816) 931-7700

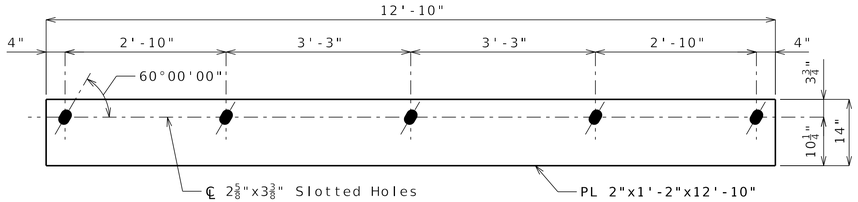

SOLE PLATE MK. SP-1E

(Est. Wt. = 1225 Lbs Each)

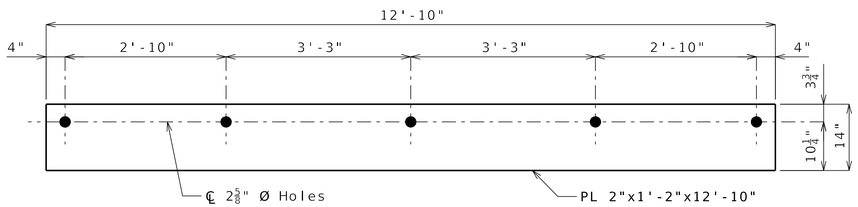

SOLE PLATE MK. SP-1F

(Est. Wt. = 1225 Lbs Each)

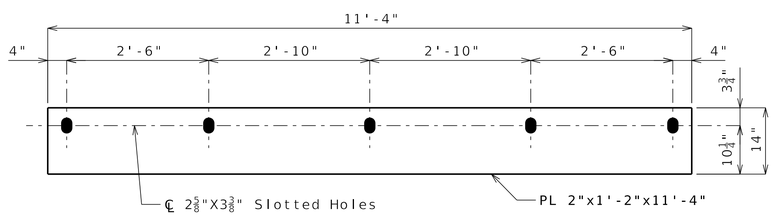

SOLE PLATE MK. SP-2E

(Est. Wt. = 1080 Lbs Each)

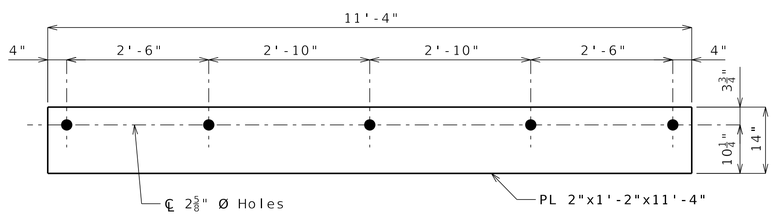

SOLE PLATE MK. SP-2F

(Est. Wt. = 1080 Lbs Each)

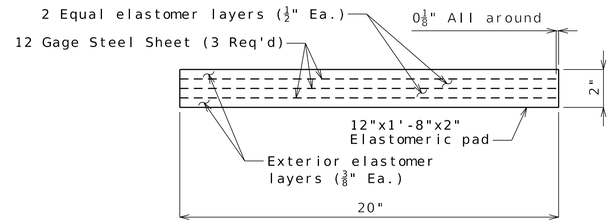

Bearing Pad MK. BP1

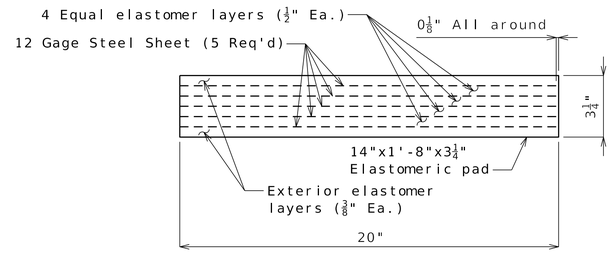

Bearing Pad MK. BP2

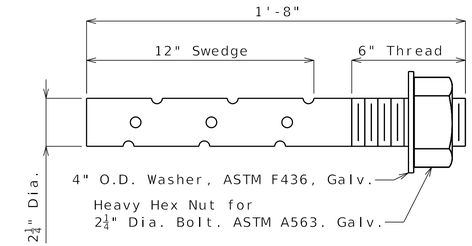

ANCHOR BOLT AB1

ASTM F1554 Grade 105, Galv.
AB1 Spans 1,2,3,4,5,7 & 8

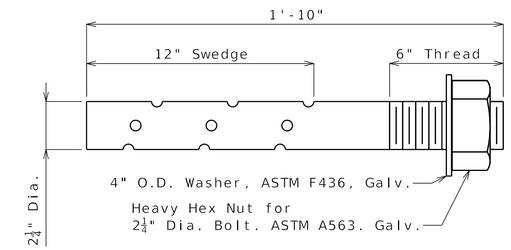

ANCHOR BOLT AB2

ASTM F1554 Grade 105, Galv.
AB2 for Span 6

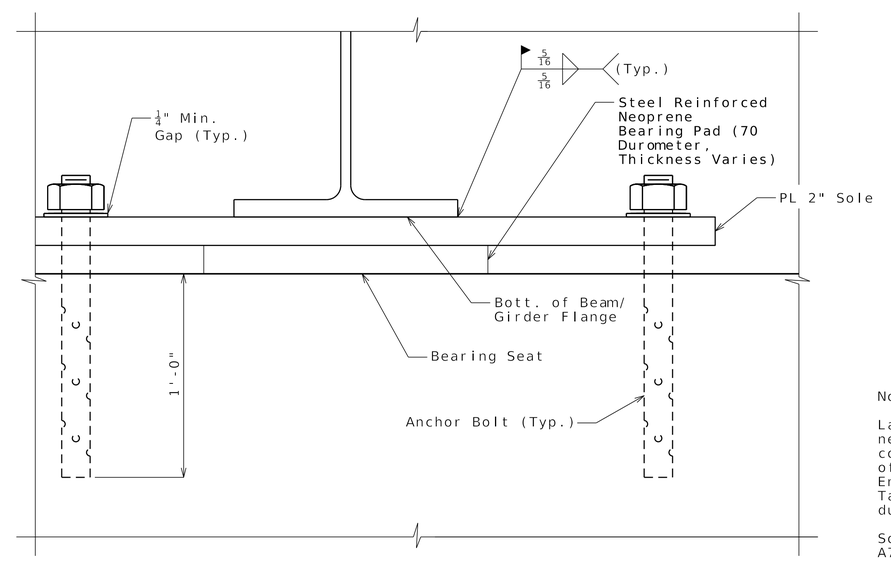

TYPICAL BEARING ASSEMBLY ELEVATION

Notes:

Laminated, steel reinforced neoprene bearing pads shall conform to the requirements of AREMA Manual for Railway Engineering, Chapter 15, Table 15-5-7 for 70 durometer hardness.

Sole plates shall be ASTM A709, Grade 50W.

NOT FOR CONSTRUCTION
BEARING DETAILS

STATE OF MISSOURI
SEAN THOMAS COONEY
NUMBER PE-2014007262
PROFESSIONAL ENGINEER
9-12-2025

DATE PREPARED	9/12/2025
ROUTE	I-70
STATE	MO
DISTRICT	BR
SHEET NO.	A5801T-25
COUNTY	ST. CHARLES
JOB NO.	JST0020
CONTRACT ID.	
PROJECT NO.	
BRIDGE NO.	A5801T

DESCRIPTION	DATE

MISSOURI HIGHWAYS AND TRANSPORTATION COMMISSION
105 WEST CAPITOL
JEFFERSON CITY, MO 65102
1-888-ASK-MODOT (1-888-275-6636)

IMPROVE 70 ALLIANCE

HNTB
715 KIRK DRIVE
KANSAS CITY, MO 64105-1310
CERTIFICATE OF AUTHORITY
NO. 001270

Bartlett & West
601 MONROE ST., SUITE 201 - JEFFERSON CITY, MO 65101
PHONE: (573) 634-2448
CERTIFICATE OF AUTHORITY NO. E00707 - ENGINEERING
PHONE: (573) 751-7717 CERT

Detailed JULY 2025
Checked JULY 2025

Note: This drawing is not to scale. Follow dimensions.

CONTROL POINT 103
74 /5/8x24_ROD_W/CAP

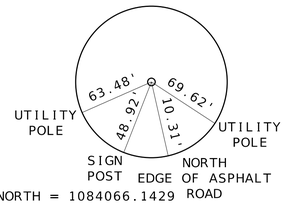

NORTH = 1084066.1429
EAST= 718041.3630
ELEV.= 632.63

CONTROL POINT 110
74 /5/8x24_ROD_W/CAP

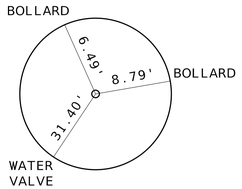

NORTH = 1082661.1273
EAST= 718510.5348
ELEV.= 610.11

CONTROL POINT 111
74 /5/8x24_ROD_W/CAP

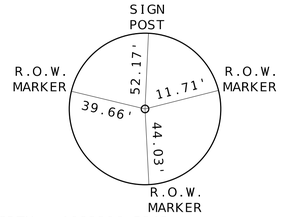

NORTH = 1082296.5243
EAST= 719837.7445
ELEV.= 610.40

BENCHMARK 202
75 -BM 2IN SQ CUT

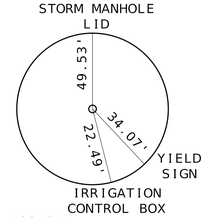

NORTH = 1081744
EAST = 718878
ELEV.= 553.33

BENCHMARK 203
75 -BM 2IN SQ CUT

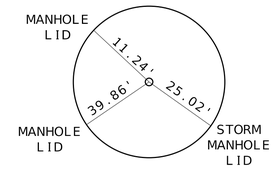

NORTH = 1083118
EAST= 719393
ELEV.= 595.44

BENCHMARK 204
75 -BM 2IN SQ CUT

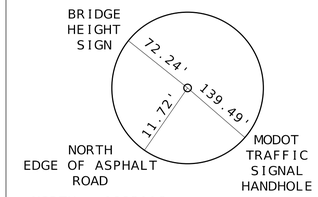

NORTH = 1083116
EAST= 717065
ELEV.= 614.72

BENCHMARK 205
75 BM 2IN SQ CUT

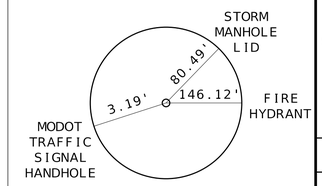

NORTH = 1082666
EAST= 717887
ELEV.= 607.64

BENCHMARK 206
75 -BM 2IN SQ CUT

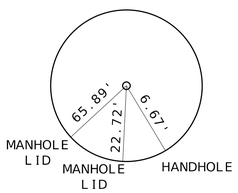

NORTH = 1082388
EAST= 719140
ELEV.= 568.06

BENCHMARK 207
75 -BM 2IN SQ CUT

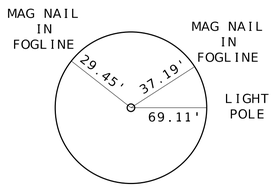

NORTH = 1082484
EAST= 720156
ELEV.= 596.03

NOT FOR CONSTRUCTION
SURVEY CONTROL POINTS

STATE OF MISSOURI
SEAN THOMAS COONEY
NUMBER PE-2014007262
PROFESSIONAL ENGINEER
9-12-2025

DATE PREPARED 9/12/2025
ROUTE I-70 | STATE MO
DISTRICT BR | SHEET NO. A5801T-26
COUNTY ST. CHARLES
JOB NO. JST0020
CONTRACT ID.
PROJECT NO.
BRIDGE NO. A5801T

DATE	DESCRIPTION

MISSOURI HIGHWAYS AND TRANSPORTATION COMMISSION
105 WEST CAPITOL
JEFFERSON CITY, MO 65102
1-888-ASK-MODOT (1-888-275-6636)

IMPROVE 70 ALLIANCE

HNTB
715 KIRK DRIVE
KANSAS CITY, MO 64105-1310
CERTIFICATE OF AUTHORITY NO. 001270

Bartlett & West
601 MONROE ST., SUITE 201 - JEFFERSON CITY, MO 65101
PHONE: (573) 634-2448
CERTIFICATE OF AUTHORITY NO. 000107 - ENGINEERING
WWW.BARTLETTWEST.COM

Detailed JUL 2025
Checked JUL 2025

Note: This drawing is not to scale. Follow dimensions.

ALL PROJECT COORDINATES HAVE BEEN PROJECTED FROM THE MISSOURI STATE PLANE COORDINATE (SPC) SYSTEM OF 1983 USING AN AVERAGE PROJECT PROJECTION (GRID TO GROUND) FACTOR. TO GET BACK TO STATE PLANE COORDINATES, MULTIPLY THE PROJECT COORDINATES BY THE AVERAGE GRID FACTOR AS SHOWN IN THE "REFERENCE CONTROL INFORMATION" PORTION OF THIS TABLE.

PROJECT COORDINATE INFORMATION

COORDINATE SYSTEM	MISSOURI STATE PLANE, EAST ZONE
HORIZONTAL DATUM	NAD83 (2011)
VERTICAL DATUM	NAVD88
GEOID MODEL	GEOID 18
ELEVATIONS DETERMINED BY	BARTLETT & WEST USED OPUS SOLUTIONS FOR THE HORIZONTAL COORDINATES AND HELD THE OPUS VERTICAL ELEVATION FOR PRIMRARY CONTROL POINTS 1 THRU 3. A DIGITAL LEVEL LOOP WAS USED FOR THE REMAINING PRIMARY CONTROL POINTS, AND VERTICAL CONTROL POINTS
PROJECT PROJECTION FACTOR	1.0000878

REFERENCE CONTROL INFORMATION

COORDINATE SYSTEM	MISSOURI STATE PLANE, EAST ZONE
CONTROL STATION	MISSOURI CORS
DESIGNATION	MODOT OFALLON CORS ARP
CORS_ID	MOOF
PID	DM4688
LATITUDE	N38°45'14.06179"
LONGITUDE	W90°41'44.78025"
NORTHING (M)	324131.153
EASTING (M)	232983.488
ZONE	EAST
PROJECT AVERAGE GRID FACTOR	0.99991221

EXAMPLE OF PROJECT COORDINATE TO S.P.C.

PROJECT NORTHING X AVERAGE GRID FACTOR
= STATE PLANE NORTHING
PROJECT EASTING X AVERAGE GRID FACTOR
= STATE PLANE EASTING

EXAMPLE: CONTROL POINT #___
N ______.____ X _.________ = N ______.___
E _______.____ X _.________ = E _______.___

LINEAR UNIT CONVERSION

1 METER = 3.280833333 US SURVEY FEET (USFT)

COORDINATE POINT LISTING

SHEET NO	STATION	LOCATION	OFFSET (USFT)	MODIFIED STATE PLANE (GROUND) NORTHING (US SURVEY FT)	EASTING (US SURVEY FT)	ELEVATION (US SURVEY FT)	DESCRIPTION	GPK POINT ID
PROJECT CONTROL POINTS								
	STA 1176+99.03	RAMP 70W-WENT	16.71' LT.	1084357.313	713965.778	643.84	74 /5/8x24_ROD_W/CAP	BM-94
	STA 1187+32.19	I-70	73.71' LT.	1084189.054	714972.273	635.15	74 /5/8x24_ROD_W/CAP	BM-95
	STA 1197+51.75	I-70	268.13' LT.	1084151.572	716074.286	646.09	74 /5/8x24_ROD_W/CAP	BM-96
	STA 84+01.08	W MAIN	48.75' LT.	1084066.143	718041.364	632.63	74 /5/8x24_ROD_W/CAP	BM-103
	STA 90+93.97	MAR-LE DR	36.74' LT.	1082661.127	718510.535	610.12	74 /5/8x24_ROD_W/CAP	BM-110
	STA 1240+43.55	RAMP Z-70E	164.08' RT.	1082296.524	719837.744	610.40	74 /5/8x24_ROD_W/CAP	BM-111
	STA 108+08.31	HWY Z	68.99' RT.	1081744	718878	553.33	75 -BM 2IN SQ CUT	BM-202
	STA 93+54.43	HWY Z	25.49' LT.	1083118	719393	595.44	75 -BM 2IN SQ CUT	BM-203
	STA 1211+14.27	I-70	77.72' LT.	1083116	717065	614.72	75 -BM 2IN SQ CUT	BM-204
	STA 84+39.53	MAR-LE DR	20.63' RT.	1082666	717887	607.64	75 BM 2IN SQ CUT	BM-205
	STA 101+31.70	HWY Z	32.67' RT.	1082388	719140	568.06	75 -BM 2IN SQ CUT	BM-206
	STA 1243+96.57	RAMP Z-70E	13.57' RT.	1082484	720156	596.03	75 -BM 2IN SQ CUT	BM-207

NOT FOR CONSTRUCTION
SURVEY CONTROL DATA

STATE OF MISSOURI
SEAN THOMAS COONEY
NUMBER PE-2014007262
PROFESSIONAL ENGINEER
9-12-2025

DATE PREPARED 9/12/2025
ROUTE I-70 | STATE MO
DISTRICT BR | SHEET NO. A5801T-27
COUNTY ST. CHARLES
JOB NO. JST0020
CONTRACT ID.
PROJECT NO.
BRIDGE NO. A5801T

DESCRIPTION | DATE

MISSOURI HIGHWAYS AND TRANSPORTATION COMMISSION
105 WEST CAPITOL
JEFFERSON CITY, MO 65102
1-888-ASK-MODOT (1-888-275-6636)

IMPROVE 70 ALLIANCE

HNTB
715 KIRK DRIVE
KANSAS CITY, MO 64105-1310
CERTIFICATE OF AUTHORITY
NO. 001270

Bartlett & West
601 MONROE ST., SUITE 201 - JEFFERSON CITY, MO 65101
(573) 634-2022 - FAX (573) 634-8021
CERTIFICATE OF AUTHORITY NO. 000107 - ENGINEERING
WWW.BARTLETTWEST.COM

Detailed JUL 2025
Checked JUL 2025

Note: This drawing is not to scale. Follow dimensions.

B_A5801T_027_JST0020_SURV-2.dgn 3:54:33 PM 9/12/2025