SEC/SUR 8 TWP 48N RGE 12W

(60'-92'-70') PRESTRESSED CONCRETE NU-GIRDER SPANS

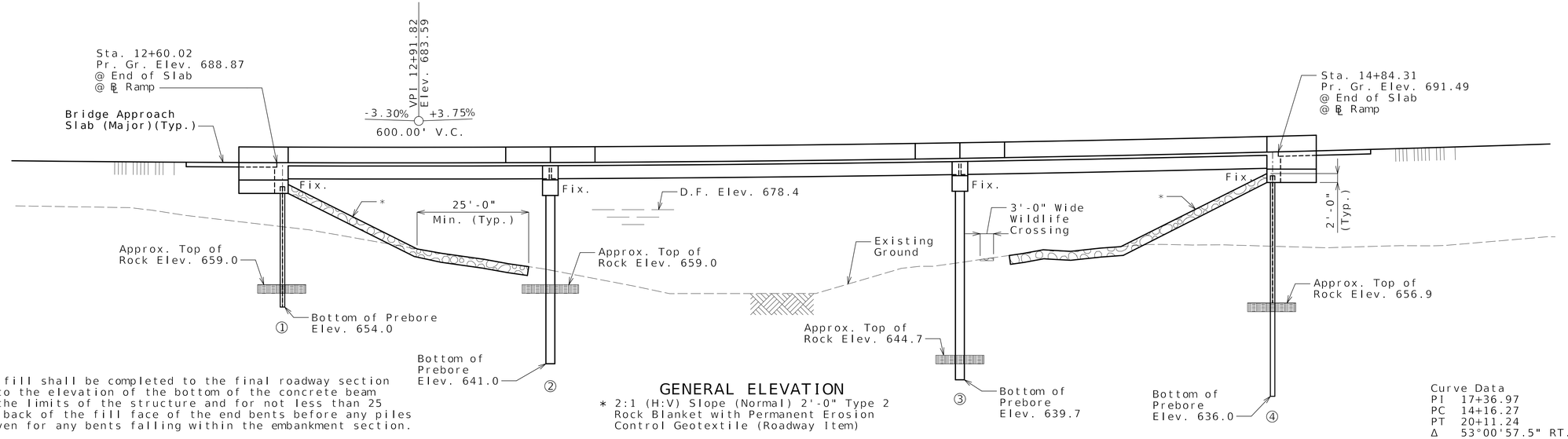

Roadway fill shall be completed to the final roadway section and up to the elevation of the bottom of the concrete beam within the limits of the structure and for not less than 25 feet in back of the fill face of the end bents before any piles are driven for any bents falling within the embankment section.

GENERAL ELEVATION

* 2:1 (H:V) Slope (Normal) 2'-0" Type 2 Rock Blanket with Permanent Erosion Control Geotextile (Roadway Item)

Curve Data
PI 17+36.97
PC 14+16.27
PT 20+11.24
Δ 53°00'57.5" RT.
D 8°54'38.5"
L 594.97'
T 320.70'
R 643.00'

Note: All bents are parallel.

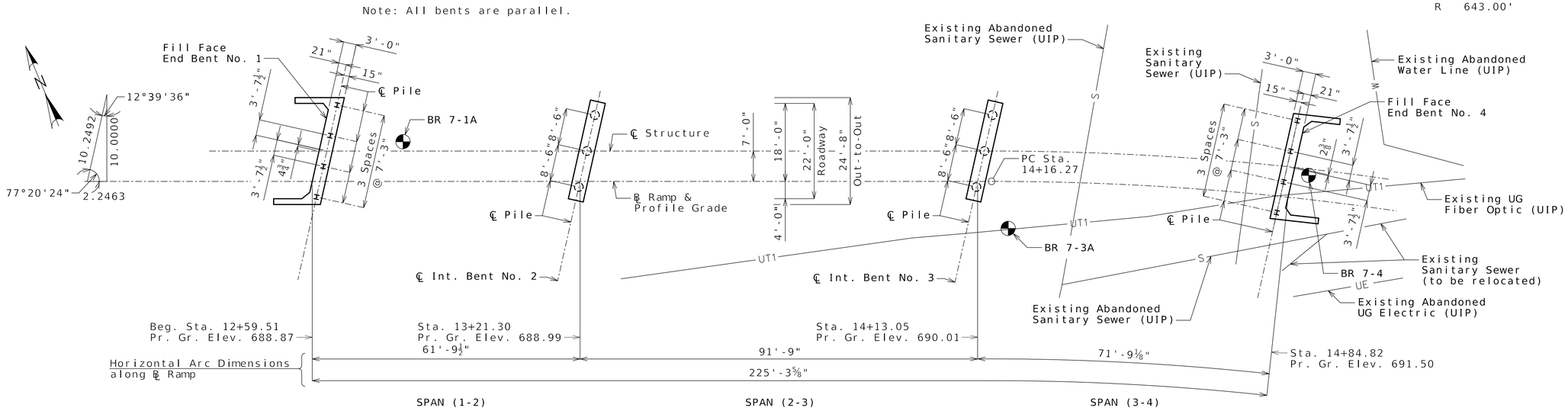

PLAN

Indicates location of borings.

Notice and Disclaimer Regarding Boring Log Data

The locations of all subsurface borings for this structure are shown on the plan sheet(s) for this structure. The boring data for all locations indicated, as well as any other boring logs or other factual records of subsurface data and investigations performed by the department for the design of the project, are shown on Sheet(s) No. 35 thru 38 and may be included in the Electronic Bridge Deliverables. They will also be available from the Project Contact upon written request. No greater significance or weight should be given to the boring data depicted on the plan sheets than is given to the subsurface data available from the district or elsewhere.

The Commission does not represent or warrant that any such boring data accurately depicts the conditions to be encountered in constructing this project. A contractor assumes all risks it may encounter in basing its bid prices, time or schedule of performance on the boring data depicted here or those available from the district, or on any other documentation not expressly warranted, which the contractor may obtain from the Commission.

B.M. 70 - ELEVATION = 715.81, STATE PLAN (1983 CENTRAL ZONE)
NORTHING 1138803.05, EASTING 1700592.207
LATITUDE 38.96086552 DEGREES, LONGITUDE -92.28837098 DEGREES
POINT DESCRIPTION 74/IR

BRIDGE: I-70 RAMP OVER HINKSON CREEK

I-70 FROM ROUTE 763 TO ROUTE 63
ABOUT 1.6 MILES EAST OF ROUTE 763
BEGINNING STATION 12+59.51

Designed Jan. 2025
Detailed Jan. 2025
Checked Jan. 2025

Note: This drawing is not to scale. Follow dimensions.

STATE OF MISSOURI
ALEX BENZ
NUMBER PE-2018003121
PROFESSIONAL ENGINEER

Alex C. Benz
02/13/2025 11:53:37 AM
Alex Benz - Civil
MO PE-2018003121

DATE PREPARED	
2/12/2025	
ROUTE	STATE
I-70	MO
DISTRICT	SHEET NO.
BR	1
COUNTY	
BOONE	
JOB NO.	
JST0021	
CONTRACT ID.	
PROJECT NO.	
BRIDGE NO.	
A9545	

DATE	DESCRIPTION
12/12/24	REV. A - PRELIMINARY REVIEW
01/31/25	REV. B - FINAL REVIEW
02/14/25	REV. 0 - RELEASED FOR CONSTRUCTION

MISSOURI HIGHWAYS AND TRANSPORTATION COMMISSION
105 WEST CAPITOL
JEFFERSON CITY, MO 65102
1-888-ASK-MODOT (1-888-275-6636)

MoDOT IMPROVE I-70 DB PROJECT 1

EFK•Moen
Civil Engineering Design
13523 Barrett Parkway Dr
Suite 250
St. Louis, MO 63021
Phone 314-394-3100
Fax 314-394-3199
Missouri Certificate of Authority: 001578

c:\pw_workdir\jacobs-amer-transp\d0181918\B_A9545_001_JST0021_Plan-and-Elev.dgn 3:47:54 PM 2/12/2025

Foundation Data

Type	Design Data		Bent Number 1	2	3	4
Load Bearing Pile	Pile Type and Size		HP 12x53	OECIP 24"	OECIP 24"	HP 12x53
	Number	ea	4	3	3	4
	Approximate Length Per Each	ft	35	41	49	50
	Pile Point Reinforcement	ea	All	All	All	All
	Min. Galvanized Penetration (Elev.)	ft	Full Length	Full Length	Full Length	Full Length
	Est. Max. Scour Depth 500 (Elev.)	ft	-	656.0	656.8	-
	Minimum Tip Penetration (Elev.)	ft	654.0	641.0	639.7	636.0
	Criteria for Min. Tip Penetration		Min. Embed.	Scour	Scour	Min. Embed.
	Pile Driving Verification Method		DF	DT	DT	DF
	Resistance Factor		0.4	0.65	0.65	0.4
	Minimum Nominal Axial Compressive Resistance	kip	535	706	706	535

OECIP = Open Ended Cast-In-Place concrete pile

DF = FHWA-modified Gates Dynamic Pile Formula

DT = Dynamic Testing

$$\text{Minimum Nominal Axial Compressive Resistance} = \frac{\text{Maximum Factored Loads}}{\text{Resistance Factor}}$$

HP piles are anticipated to be driven to refusal on rock. Review all borings for depth of rock and restrict driving as appropriate to comply with hard rock driving criteria in accordance with Sec 702. When pile refusal on rock occurs, as approved by the engineer, the minimum nominal axial compressive resistance is verified and no additional pile driving verification method is required.

Prebore for piles at Bents No. 1 thru 4 to elevations 654.0, 641.0, 639.7 and 636.0 respectively.

All piles shall be galvanized down to the minimum galvanized penetration (elevation).

Manufactured pile point reinforcement shall be used on all piles in this structure.

Pile point reinforcement need not be galvanized. Shop drawings will not be required for pile point reinforcement.

The contractor shall make every effort to achieve the minimum galvanized penetration (elevation) shown on the plans for all piles. Deviations in penetration less than 5 feet of the minimum will be considered acceptable provided the contractor makes the necessary corrections to ensure the minimum penetrtion is achieved on subsequent piles.

Hydrologic Data

Drainage Area = 43 mi^2
Design Flood Frequency = 100 years
Design Flood Discharge = 15,100 cfs
Design Flood (D.F.) Elevation = 678.4
Estimated Backwater = 0.1 ft
Average Velocity thru Opening = 6.1 ft/s
Freeboard (50-year)
Freeboard = 7.3 ft
Roadway Overtopping
Overtopping Flood Discharge = N/A cfs
Overtopping Flood Frequency > 500 years
500-Year Flood Elevation = 680.9

General Notes:

Design Specifications:
2020 AASHTO LRFD Bridge Design Specifications (9th Ed.)
Seismic Design Category = A
Design earthquake response spectral acceleration coefficient at 1.0 second period, SD1 = 0.088
Acceleration Coefficient (effective peak ground acceleration coefficient), As = 0.060

Design Loading:
Vehicular = HL-93
Future Wearing Surface = 35 lb/sf
Earth = 120 lb/cf
Equivalent Fluid Pressure = 45 lb/cf (Min.)
Superstructure: Simply-Supported, Non-composite for dead load.
Continuous Composite for live load.

Design Unit Stresses:

Class B Concrete (Substructure)	f'c = 3,000 psi
Class B-2 Concrete (Superstructure, except Prestressed Girders and Barrier)	f'c = 4,000 psi
Class B-1 Concrete (Barrier)	f'c = 4,000 psi
Reinforcing Steel (ASTM A615 Grade 60)	fy = 60,000 psi
Structural Steel HP Pile (ASTM A709 Grade 50)	fy = 50,000 psi
Welded or Seamless steel shell (pipe) for CIP pile (ASTM A252 Grade 3)	fy = 45,000 psi

For precast prestressed panel stresses, see Sheet No. 19.

For prestressed girder stresses, see Sheets No. 15-17.

Neoprene Pads:
Neoprene bearing pads shall be 60 durometer and shall be in accordance with Sec 716.

Reinforcing Steel:
Minimum clearance to reinforcing steel shall be 1 1/2" unless otherwise shown.

Joint Filler:
All joint filler shall be in accordance with Sec 1057 for preformed sponge rubber expansion and partition joint filler, except as noted.

Traffic Handling:
Structure to be closed during construction. Traffic to be maintained on other routes. See Seg1 MOT plans for traffic control.

Miscellaneous:
MoDOT Construction personnel will indicate the type of joint filler option used under the precast panels for this structure:

☐ Constant Joint Filler
☐ Variable Joint Filler

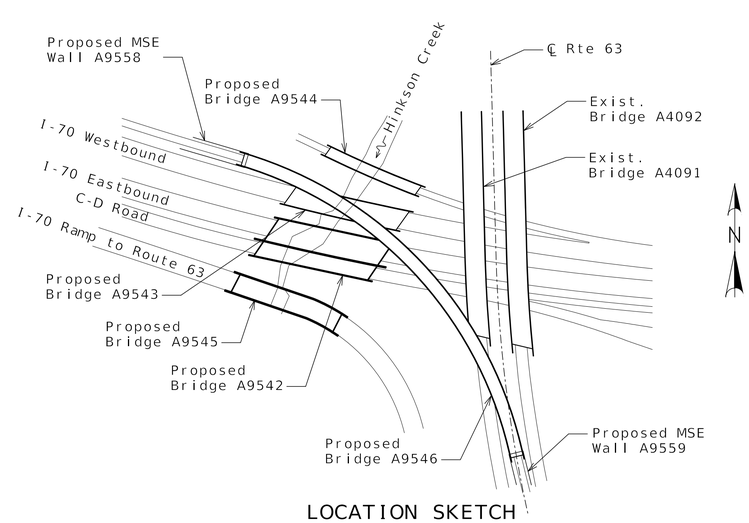

LOCATION SKETCH

STATE OF MISSOURI
ALEX BENZ
NUMBER PE-2018003121
PROFESSIONAL ENGINEER

Alex C. Benz
02/13/2025 11:53:42 AM
Alex Benz - Civil
MO PE-2018003121

DATE PREPARED	2/12/2025
ROUTE	I-70
STATE	MO
DISTRICT	BR
SHEET NO.	2
COUNTY	BOONE
JOB NO.	JST0021
CONTRACT ID.	
PROJECT NO.	
BRIDGE NO.	A9545

DATE	DESCRIPTION
12/12/24	REV. A - PRELIMINARY REVIEW
01/31/25	REV. B - FINAL REVIEW
02/14/25	REV. 0 - RELEASED FOR CONSTRUCTION

MISSOURI HIGHWAYS AND TRANSPORTATION COMMISSION
105 WEST CAPITOL
JEFFERSON CITY, MO 65102
1-888-ASK-MODOT (1-888-275-6636)

MoDOT IMPROVE I-70 DB PROJECT 1

EFK•Moen
Civil Engineering Design
13523 Barrett Parkway Dr
Suite 250
St. Louis, MO 63021
Phone 314-394-3100
Fax 314-394-3199
Missouri Certificate of Authority: 001578

Detailed Jan. 2025
Checked Jan. 2025

Note: This drawing is not to scale. Follow dimensions.

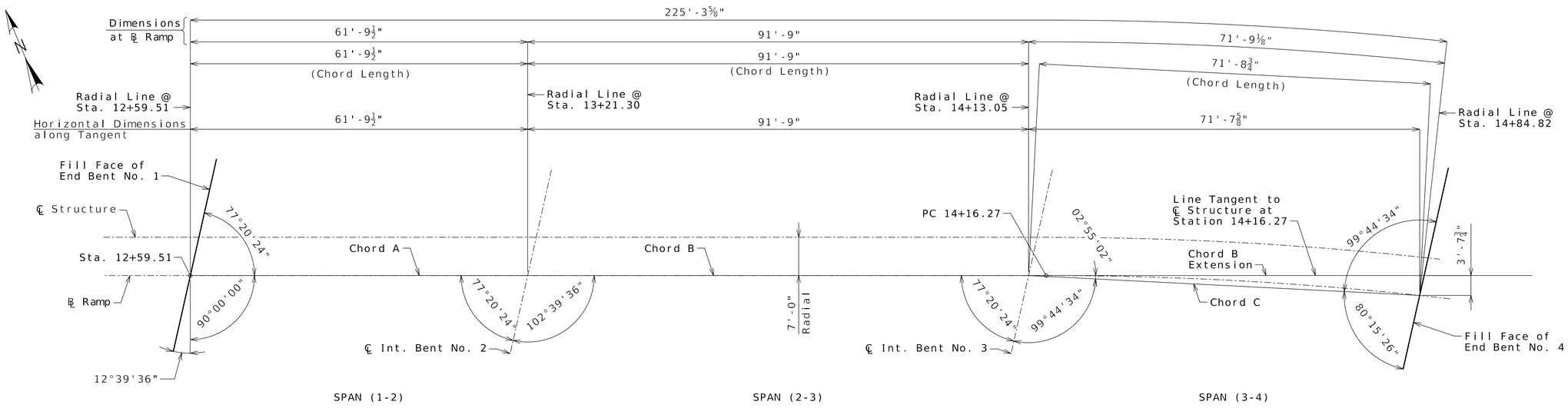

PLAN

Notes:

All dimensions are horizontal.

All bents are parallel.

All stationing is located along ℄ Ramp.

SUBSTRUCTURE LAYOUT

Detailed Jan. 2025
Checked Jan. 2025

Note: This drawing is not to scale. Follow dimensions.

STATE OF MISSOURI
ALEX BENZ
NUMBER PE-2018003121
PROFESSIONAL ENGINEER

Alex C. Benz
02/13/2025 11:53:42 AM
Alex Benz - Civil
MO PE-2018003121

DATE PREPARED	
2/12/2025	
ROUTE: I-70	STATE: MO
DISTRICT: BR	SHEET NO.: 3
COUNTY: BOONE	
JOB NO.: JST0021	
CONTRACT ID.	
PROJECT NO.	
BRIDGE NO.: A9545	

DATE	DESCRIPTION
12/12/24	REV. A - PRELIMINARY REVIEW
01/31/25	REV. B - FINAL REVIEW
02/14/25	REV. 0 - RELEASED FOR CONSTRUCTION

MISSOURI HIGHWAYS AND TRANSPORTATION COMMISSION
105 WEST CAPITOL
JEFFERSON CITY, MO 65102
1-888-ASK-MODOT (1-888-275-6636)

MoDOT IMPROVE I-70 DB PROJECT 1

EFK•Moen
Civil Engineering Design
13523 Barrett Parkway Dr
Suite 250
St. Louis, MO 63021
Phone 314-394-3100
Fax 314-394-3199
Missouri Certificate of Authority: 001578

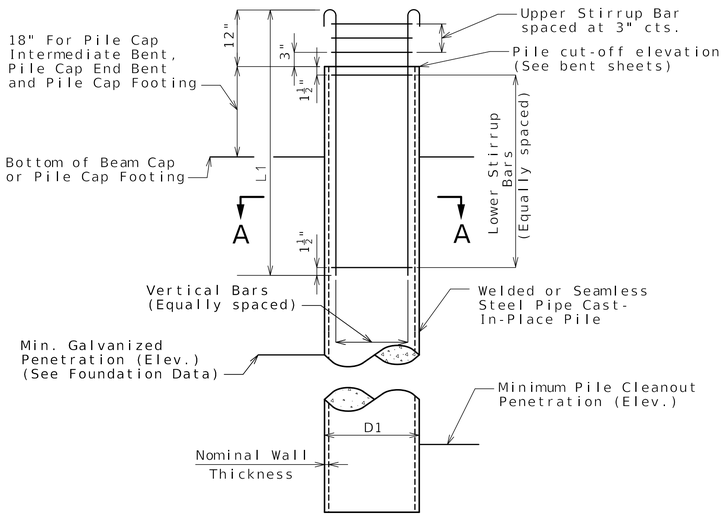

GALVANIZED OPEN ENDED CAST-IN-PLACE (OECIP) CONCRETE PILE WITHOUT PILE POINT REINFORCEMENT

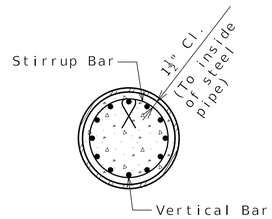

SECTION A-A

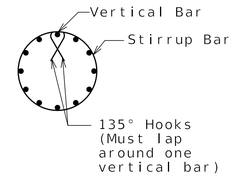

DETAIL OF SEISMIC STIRRUP BAR

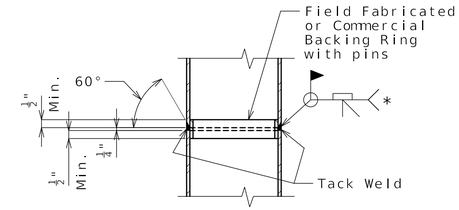

STEEL PIPE PILE SPLICE

* Galvanizing material shall be omitted or removed one inch clear of weld locations in accordance with Sec 702.

GALVANIZED OPEN ENDED CAST-IN-PLACE (OECIP) CONCRETE PILE DATA		
Bent Number	2	3
D1, CECIP Pile (O.D.)	24"	24"
Min. Nominal Wall Thickness	3/4"	3/4"
Pile Point Reinforcement	Open ended cutting shoe	
Min. Pile Cleanout Penetration (Elev.)	641	640
Vertical Bars	12-#6-V20	12-#6-V30
L1, Length of Vertical Bars	7'-3"	7'-3"
Upper Stirrup Bars	3-#4-P20	3-#4-P30
Lower Stirrup Bars	7-#4-P21	7-#4-P31

Notes:

Welded or seamless steel shell (pipe) shall be ASTM A252 Modified Grade 3 (fy = 50,000 psi) with physical and chemical requirements that meet ASTM A572 Grade 50. Pipe certification and source material certification shall be required.

Open ended pile shall be augered out to the minimum pile cleanout penetration elevation and filled with Class B-1 concrete.

Concrete for cast-in-place pile shall be Class B-1.

Steel casting for open ended cutting shoe pile point reinforcement shall be ASTM A27 Grade 65-35.

The minimum wall thickness of any spot or local area of any type shall not be more than 12.5% under the specified nominal wall thickness.

The contractor shall determine the pile wall thickness required to avoid damage from all driving activities, but wall thickness shall not be less than the minimum specified. No additional payment will be made for furnishing a thicker pile wall then specified on the plans.

Splices of pipe for cast-in-place pipe pile shall be made watertight and to the full strength of the pipe above and below the splice to permit hard driving without damage. Pipe damaged during driving shall be replaced without cost to the state. Pipe sections used for splicing shall be at least 5 feet in length.

At the contractor's option, the hooks of vertical bars embedded in the beam cap may be oriented inward or outward.

Reinforcing steel for cast-in-place pile is included in the Bill of Reinforcing Steel.

All reinforcement for cast-in-place pile is included in the estimated quantities for bents.

For Foundation Data table, see Sheet No. 2.

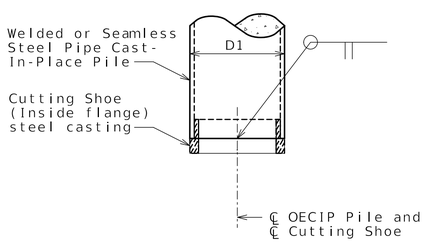

MANUFACTURED OPEN ENDED CUTTING SHOE (INSIDE FLANGE)

GALVANIZED OPEN ENDED CAST-IN-PLACE (OECIP) CONCRETE PILE

Detailed Jan. 2025
Checked Jan. 2025

Note: This drawing is not to scale. Follow dimensions.

STATE OF MISSOURI ALEX BENZ NUMBER PE-2018003121 PROFESSIONAL ENGINEER

Alex C. Benz
02/13/2025 11:53:42 AM
Alex Benz - Civil
MO PE-2018003121

DATE PREPARED	
2/12/2025	
ROUTE: I-70	STATE: MO
DISTRICT: BR	SHEET NO.: 4
COUNTY: BOONE	
JOB NO.: JST0021	
CONTRACT ID.	
PROJECT NO.	
BRIDGE NO.: A9545	

DATE	DESCRIPTION
12/12/24	REV. A - PRELIMINARY REVIEW
01/31/25	REV. B - FINAL REVIEW
02/14/25	REV. 0 - RELEASED FOR CONSTRUCTION

MISSOURI HIGHWAYS AND TRANSPORTATION COMMISSION
105 WEST CAPITOL
JEFFERSON CITY, MO 65102
1-888-ASK-MODOT (1-888-275-6636)

MoDOT IMPROVE I-70 DB PROJECT 1

EFK•Moen
Civil Engineering Design
13523 Barrett Parkway Dr Suite 250 St. Louis, MO 63021
Phone 314-394-3100
Fax 314-394-3199
Missouri Certificate of Authority: 001578

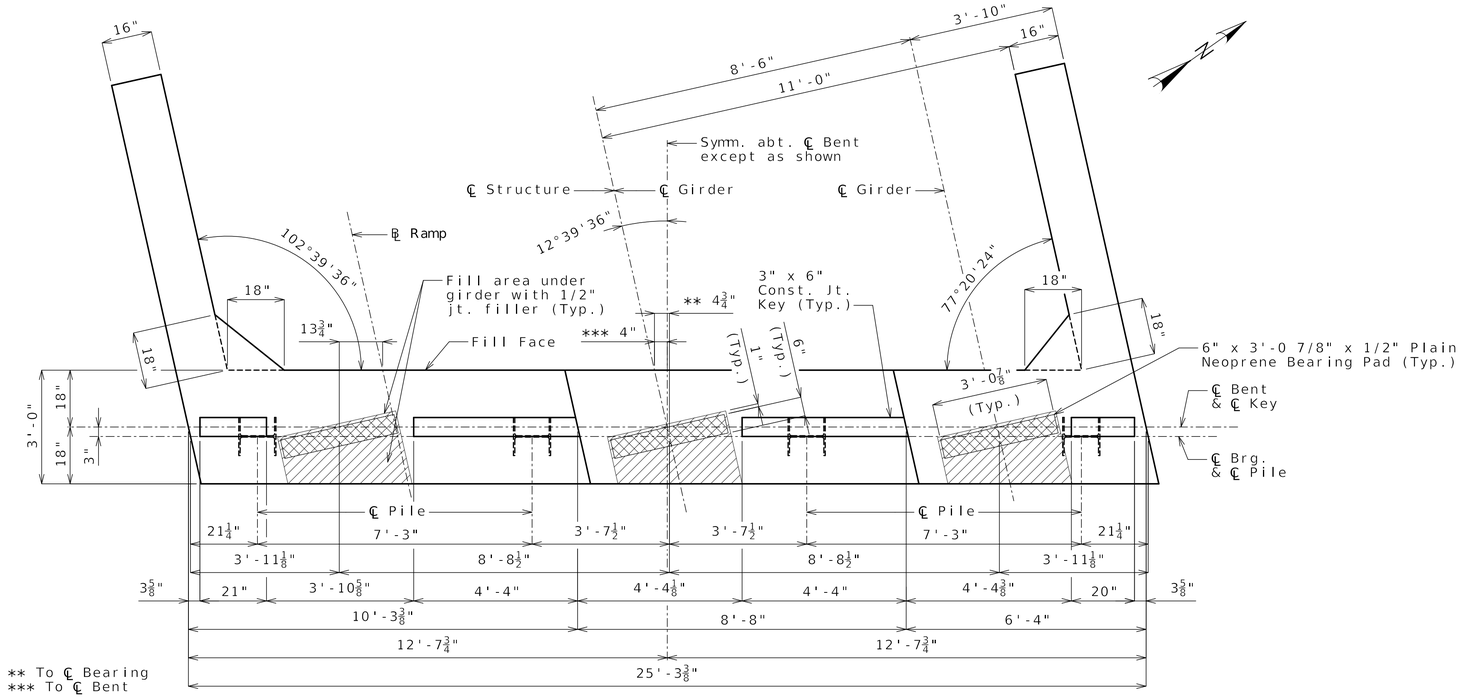

PLAN OF BEAM

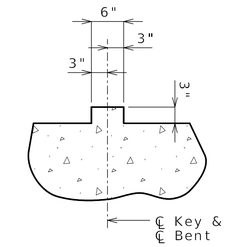

SECTION THRU KEY

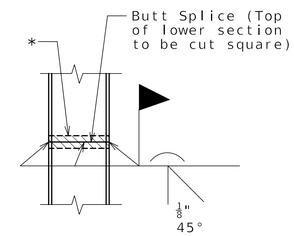

STEEL PILE SPLICE

(If required)

* Galvanizing material shall be omitted or removed one inch clear of weld locations in accordance with Sec 702.

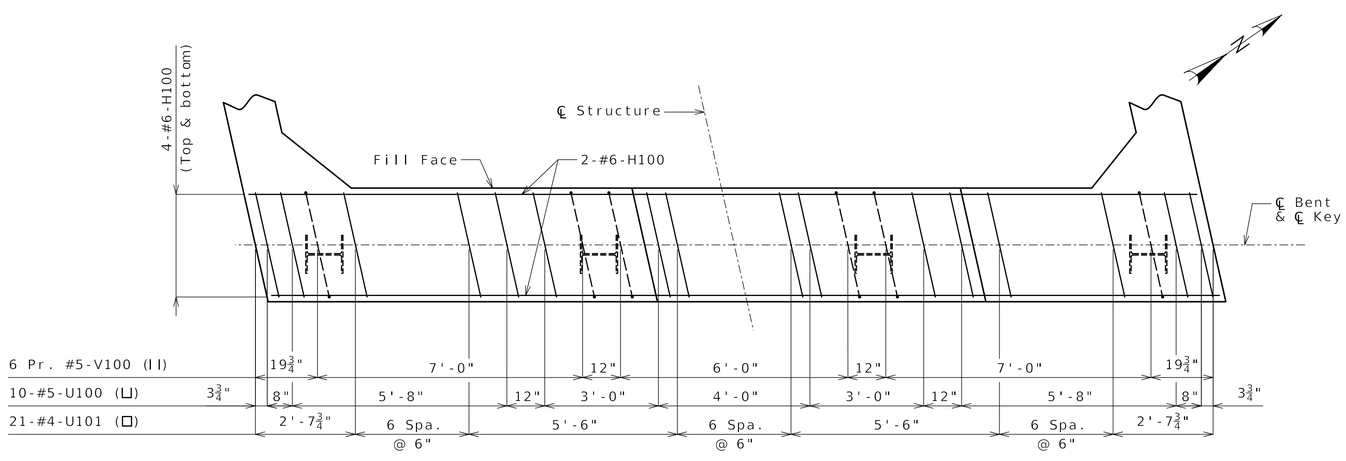

PLAN OF BEAM SHOWING REINFORCEMENT

Keys not shown for clarity.

General Notes:

Woek this sheet with Sheets No. 6 & 7.

All U bars and pairs of V bars shall be placed parallel to centerline of roadway.

Reinforcing steel shall be shifted to clear piles.

U bars shall clear piles by at least 1 1/2 inches.

DETAILS OF END BENT NO. 1

Detailed Jan. 2025
Checked Jan. 2025

Note: This drawing is not to scale. Follow dimensions.

STATE OF MISSOURI
ALEX BENZ
NUMBER PE-2018003121
PROFESSIONAL ENGINEER

Alex C. Benz
02/13/2025 11:53:42 AM
Alex Benz - Civil
MO PE-2018003121

DATE PREPARED	
2/12/2025	
ROUTE	STATE
I-70	MO
DISTRICT	SHEET NO.
BR	5
COUNTY	
BOONE	
JOB NO.	
JST0021	
CONTRACT ID.	
PROJECT NO.	
BRIDGE NO.	
A9545	

DATE	DESCRIPTION
12/12/24	REV. A - PRELIMINARY REVIEW
01/31/25	REV. B - FINAL REVIEW
02/14/25	REV. 0 - RELEASED FOR CONSTRUCTION

MISSOURI HIGHWAYS AND TRANSPORTATION COMMISSION
105 WEST CAPITOL
JEFFERSON CITY, MO 65102
1-888-ASK-MODOT (1-888-275-6636)

MoDOT IMPROVE I-70 DB PROJECT 1

EFK•Moen
Civil Engineering Design
13523 Barrett Parkway Dr
Suite 250
St. Louis, MO 63021
Phone 314-394-3100
Fax 314-394-3199
Missouri Certificate of Authority: 001578

c:\pw_workdir\jacobs-amer-transp\d0181918\B_A9545_005_JST0021_End-Bent-1_1.dgn 3:48:37 PM 2/12/2025

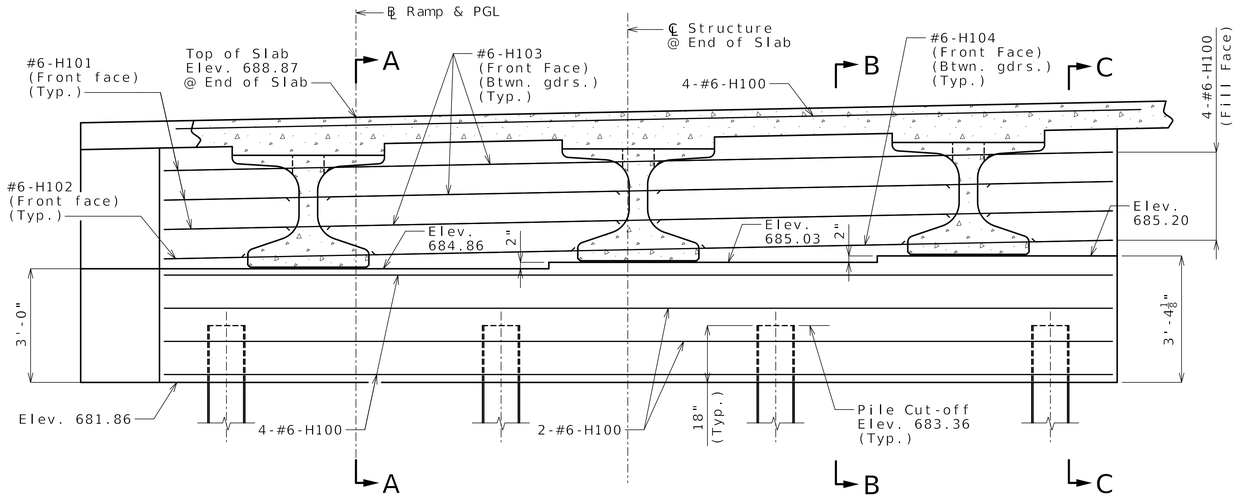

SECTION NEAR END BENT

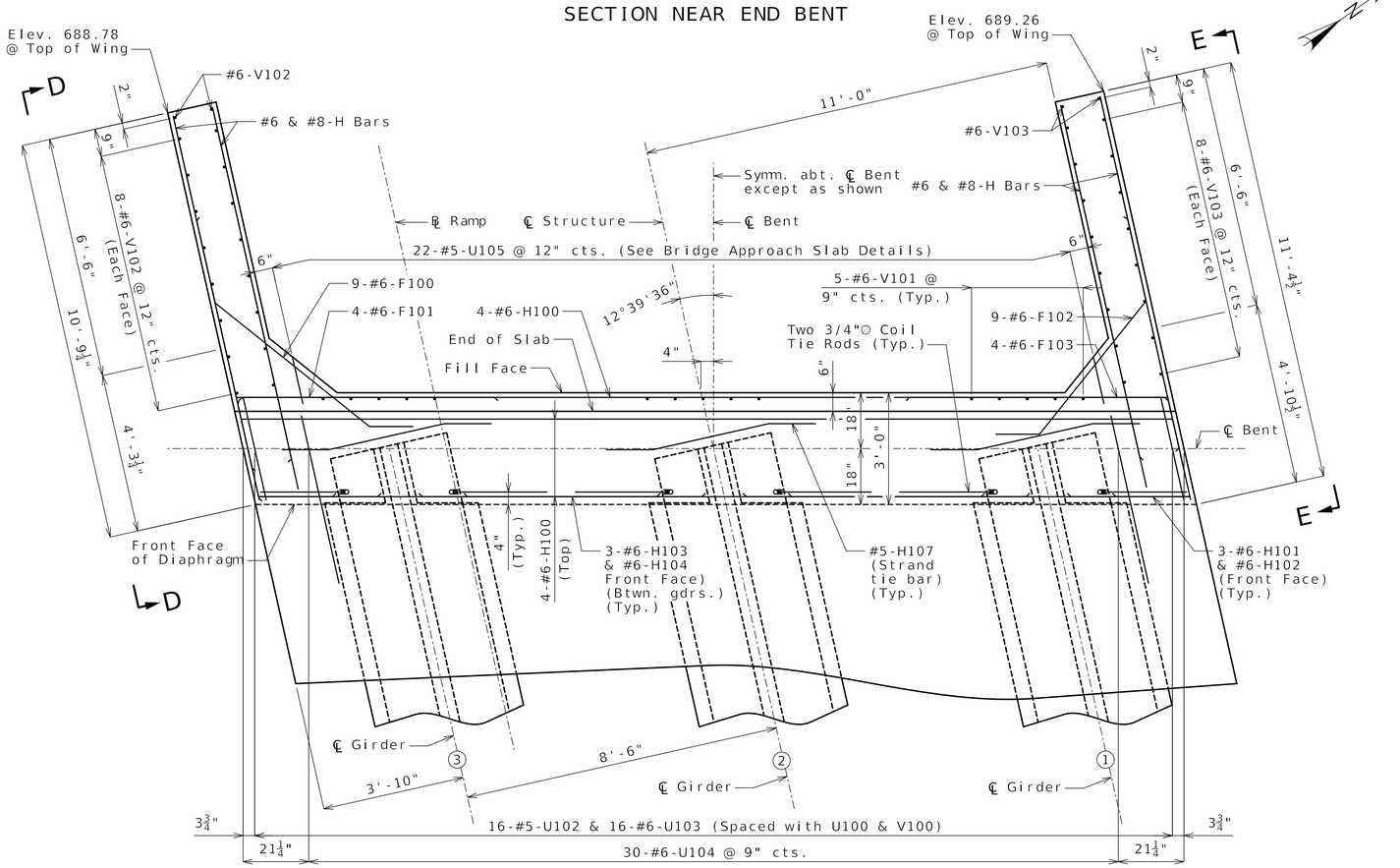

PART PLAN

DETAILS OF END BENT NO. 1

Notes:

Work this sheet with Sheets No. 5 & 7.

For Section A-A, B-B, & C-C and Elevations D-D & E-E, see Sheet No. 7.

The #6-F100 and #6-F102 bars shall be bent in the field to clear girders.

The U bars shall be placed parallel to centerline of roadway.

All concrete in the end bent above top of beam and below top of slab shall be Class B-2.

Strands at end of beams shall be field bent or if necessary cut in field to maintain 1 1/2-inch minimum clearance to fill face of end bent.

For locations of coil tie rods and #5-H107 (strand tie bar), see Sheet No. 15.

For details of vertical drain at end bents, see Sheet No. 8.

For details of bridge approach slab, see Sheet No. 30.

STATE OF MISSOURI
ALEX BENZ
NUMBER PE-2018003121
PROFESSIONAL ENGINEER

Alex C. Benz
02/13/2025 11:53:42 AM
Alex Benz - Civil
MO PE-2018003121

DATE PREPARED	
2/12/2025	
ROUTE: I-70	STATE: MO
DISTRICT: BR	SHEET NO.: 6
COUNTY: BOONE	
JOB NO.: JST0021	
CONTRACT ID.	
PROJECT NO.	
BRIDGE NO.: A9545	

DATE	DESCRIPTION
12/12/24	REV. A - PRELIMINARY REVIEW
01/31/25	REV. B - FINAL REVIEW
02/14/25	REV. 0 - RELEASED FOR CONSTRUCTION

MISSOURI HIGHWAYS AND TRANSPORTATION COMMISSION
105 WEST CAPITOL
JEFFERSON CITY, MO 65102
1-888-ASK-MODOT (1-888-275-6636)

MoDOT IMPROVE I-70 DB PROJECT 1

EFK•Moen
Civil Engineering Design
13523 Barrett Parkway Dr
Suite 250
St. Louis, MO 63021
Phone 314-394-3100
Fax 314-394-3199
Missouri Certificate of Authority: 001578

Detailed Jan. 2025
Checked Jan. 2025

Note: This drawing is not to scale. Follow dimensions.

c:\pw_workdir\jacobs-amer-transp\d0181918\B_A9545_006_JST0021_End-Bent-1_2.dgn 3:48:47 PM 2/12/2025

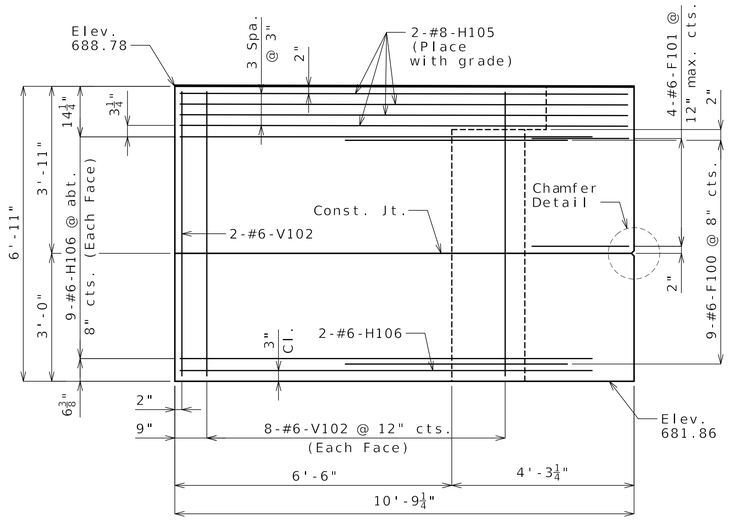

ELEVATION D-D

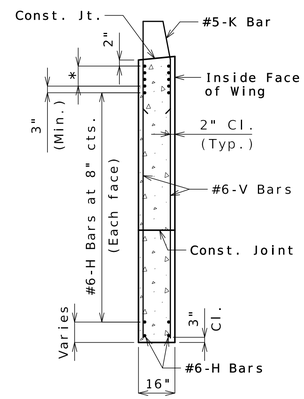

TYPICAL SECTION THRU WING

* #8-H Bars at 3" cts. (Each face)(Place with grade)

(Right wing shown, left wing similar)

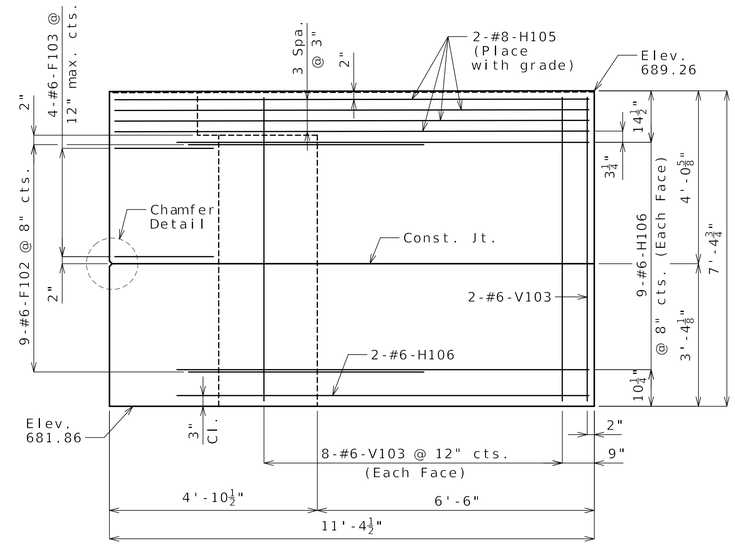

ELEVATION E-E

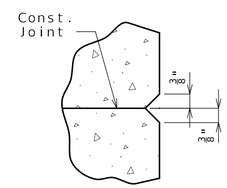

CHAMFER DETAIL

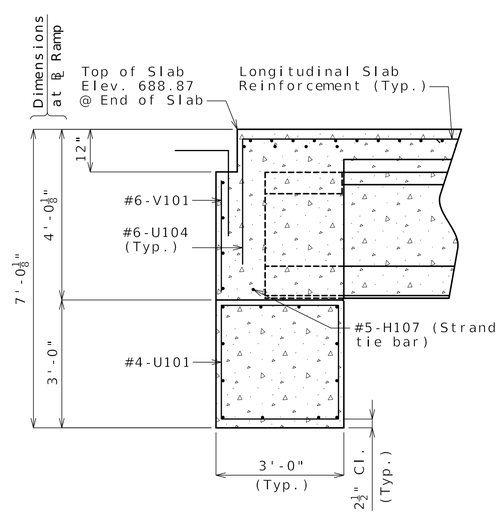

SECTION A-A

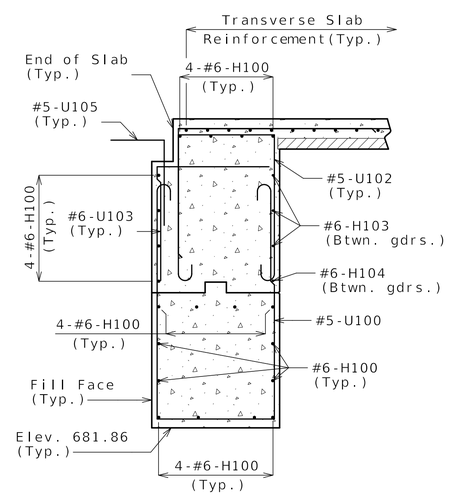

SECTION B-B

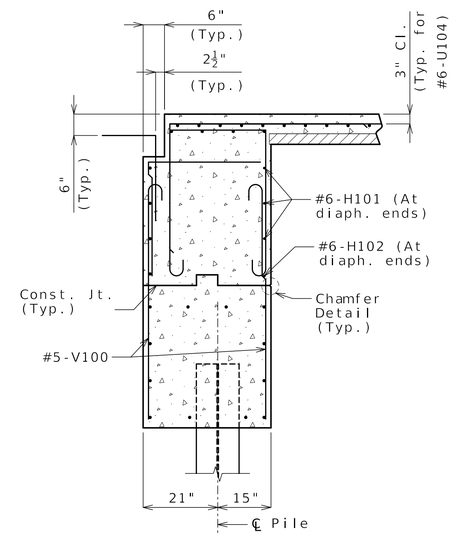

SECTION C-C

Notes:

Work this sheet with Sheets No. 5 & 6.

For reinforcement of the barrier, see Sheets No. 28 & 29.

DETAILS OF END BENT NO. 1

Detailed Jan. 2025
Checked Jan. 2025

Note: This drawing is not to scale. Follow dimensions.

STATE OF MISSOURI
ALEX BENZ
NUMBER PE-2018003121
PROFESSIONAL ENGINEER

Alex C. Benz
02/13/2025 11:53:42 AM
Alex Benz - Civil
MO PE-2018003121

DATE PREPARED	
2/12/2025	
ROUTE	STATE
I-70	MO
DISTRICT	SHEET NO.
BR	7
COUNTY	
BOONE	
JOB NO.	
JST0021	
CONTRACT ID.	
PROJECT NO.	
BRIDGE NO.	
A9545	

DATE	DESCRIPTION
12/12/24	REV. A - PRELIMINARY REVIEW
01/31/25	REV. B - FINAL REVIEW
02/14/25	REV. 0 - RELEASED FOR CONSTRUCTION

MISSOURI HIGHWAYS AND TRANSPORTATION COMMISSION
105 WEST CAPITOL
JEFFERSON CITY, MO 65102
1-888-ASK-MODOT (1-888-275-6636)

MoDOT IMPROVE I-70 DB PROJECT 1

EFK•Moen
Civil Engineering Design
13523 Barrett Parkway Dr
Suite 250
St. Louis, MO 63021
Phone 314-394-3100
Fax 314-394-3199
Missouri Certificate of Authority: 001578

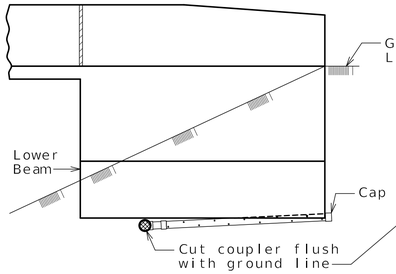

ELEVATION OF WING

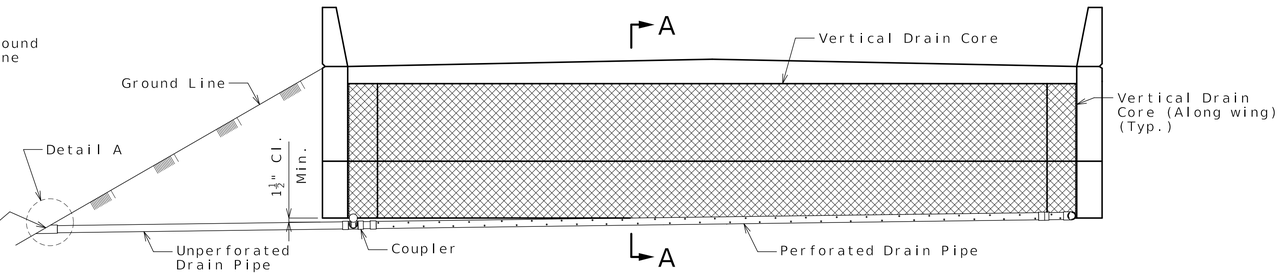

ELEVATION OF END BENT

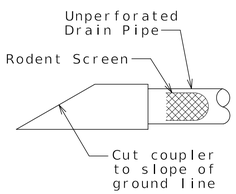

DETAIL A

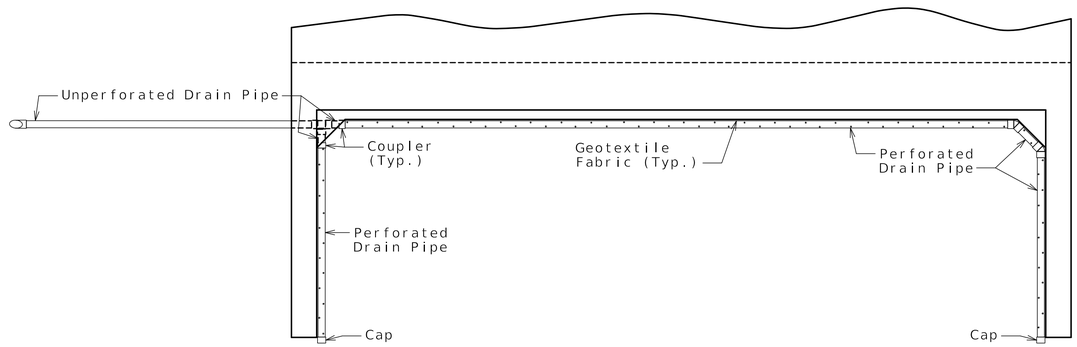

PLAN OF END BENT

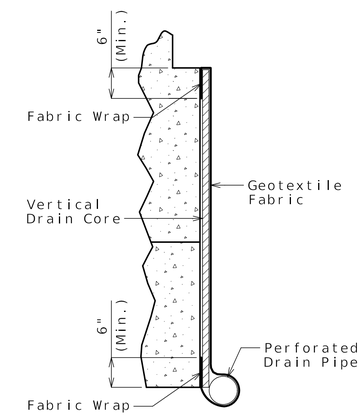

PART SECTION A-A
(Section thru wing similar)

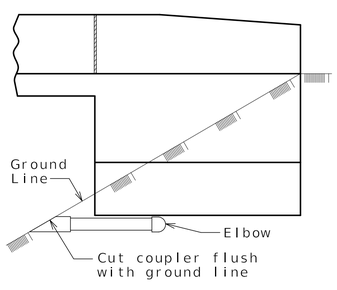

ELEVATION OF WING

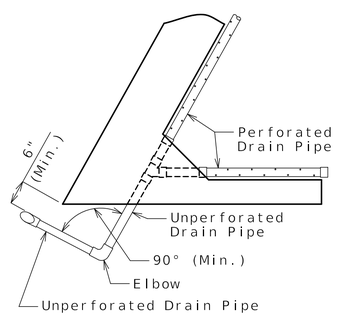

PART PLAN

OPTIONAL TURNED DRAIN
(Use only when straight drain is not practical.)

General Notes:

All drain pipe shall be sloped 1 to 2 percent.

Drain pipe may be either 6-inch diameter corrugated metallic-coated steel pipe underdrain, 4-inch diameter corrugated polyvinyl chloride (PVC) drain pipe, or 4-inch diameter corrugated polyethylene (PE) drain pipe.

Drain pipe shall be placed at fill face of end bent and inside face of wings. The pipe shall slope to lowest grade of ground line, also missing the lower beam of end bent by a minimum of 1 1/2 inches.

Perforated pipe shall be placed at fill face side and inside face of wings at the bottom of end bent and plain pipe shall be used where the vertical drain ends to the exit at ground line.

VERTICAL DRAIN AT END BENTS

(Squared end bent shown, skewed end bent similar)

Detailed Jan. 2025
Checked Jan. 2025

Note: This drawing is not to scale. Follow dimensions.

STATE OF MISSOURI ALEX BENZ NUMBER PE-2018003121 PROFESSIONAL ENGINEER

Alex C. Benz
02/13/2025 11:53:43 AM
Alex Benz - Civil
MO PE-2018003121

DATE PREPARED	
2/12/2025	
ROUTE	STATE
I-70	MO
DISTRICT	SHEET NO.
BR	8
COUNTY	
BOONE	
JOB NO.	
JST0021	
CONTRACT ID.	
PROJECT NO.	
BRIDGE NO.	
A9545	

DATE	DESCRIPTION
12/12/24	REV. A - PRELIMINARY REVIEW
01/31/25	REV. B - FINAL REVIEW
02/14/25	REV. 0 - RELEASED FOR CONSTRUCTION

MISSOURI HIGHWAYS AND TRANSPORTATION COMMISSION
105 WEST CAPITOL
JEFFERSON CITY, MO 65102
1-888-ASK-MODOT (1-888-275-6636)

MoDOT IMPROVE I-70 DB PROJECT 1

EFK•Moen
Civil Engineering Design
13523 Barrett Parkway Dr
Suite 250
St. Louis, MO 63021
Phone 314-394-3100
Fax 314-394-3199
Missouri Certificate of Authority: 001578

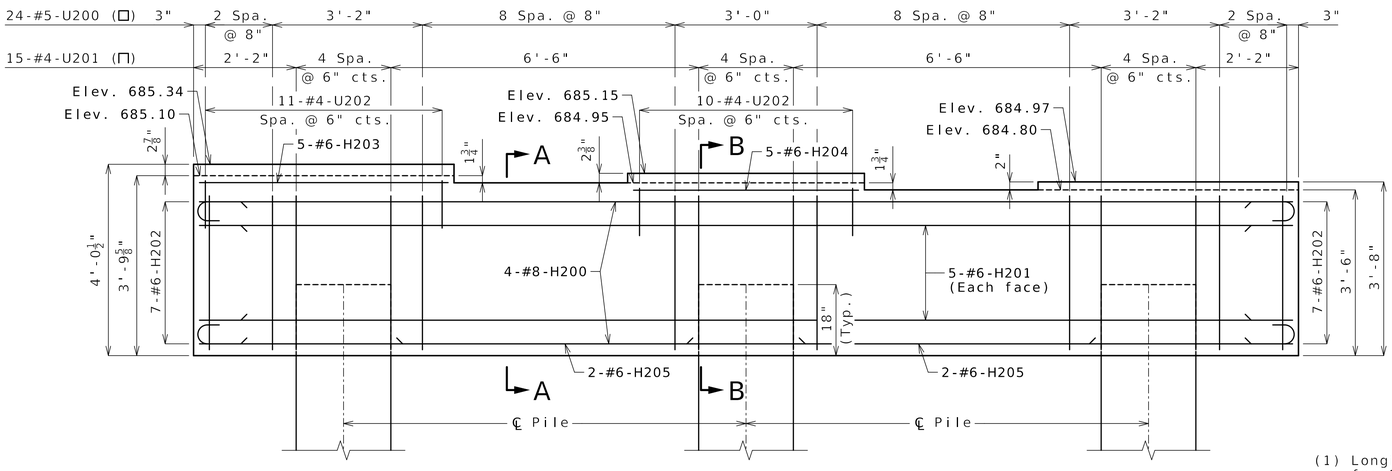

ELEVATION

(1) Longitudinal step for Span (1-2)

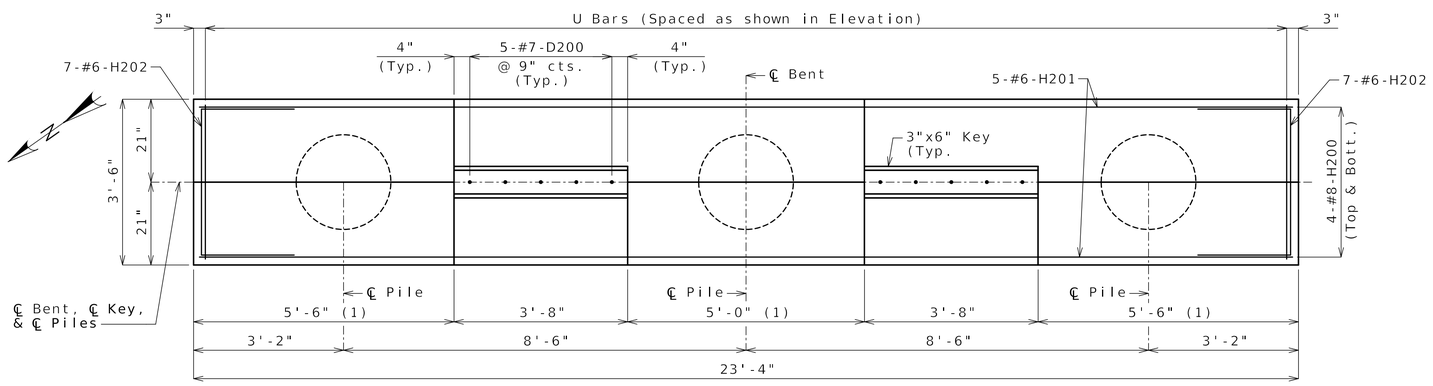

PLAN SHOWING REINFORCEMENT

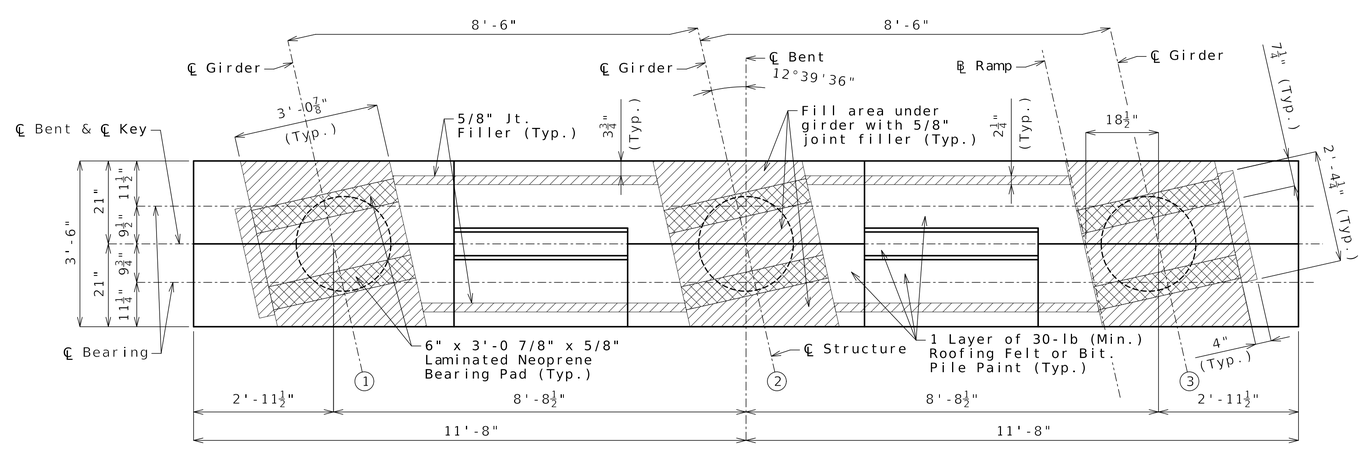

PLAN OF BEAM

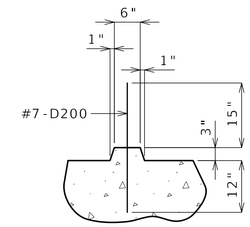

SECTION THRU KEY

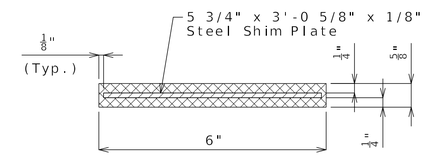

SECTION THRU LAMINATED NEOPRENE BEARING PAD

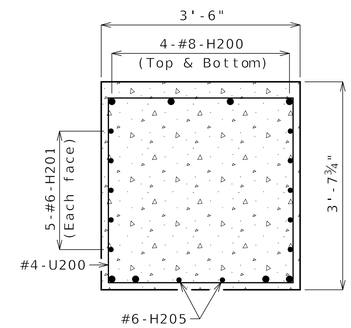

SECTION A-A

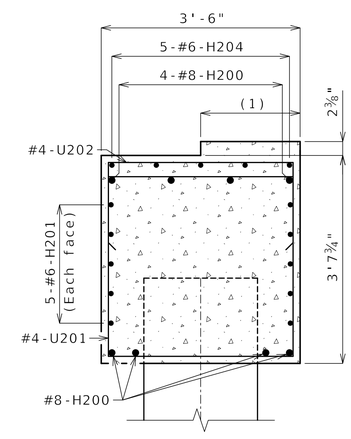

SECTION B-B

Note:

For steps 2 inches or more, use 2 1/4" x 1/2-inch joint filler up vertical face

DETAILS OF INTERMEDIATE BENT NO. 2

Detailed Jan. 2025
Checked Jan. 2025

Note: This drawing is not to scale. Follow dimensions.

STATE OF MISSOURI — ALEX BENZ — NUMBER PE-2018003121 — PROFESSIONAL ENGINEER

Alex C. Benz
02/13/2025 11:53:43 AM
Alex Benz - Civil
MO PE-2018003121

DATE PREPARED	2/12/2025
ROUTE	I-70
STATE	MO
DISTRICT	BR
SHEET NO.	9
COUNTY	BOONE
JOB NO.	JST0021
CONTRACT ID.	
PROJECT NO.	
BRIDGE NO.	A9545

DATE	DESCRIPTION
12/12/24	REV. A - PRELIMINARY REVIEW
01/31/25	REV. B - FINAL REVIEW
02/14/25	REV. 0 - RELEASED FOR CONSTRUCTION

MISSOURI HIGHWAYS AND TRANSPORTATION COMMISSION
105 WEST CAPITOL
JEFFERSON CITY, MO 65102
1-888-ASK-MODOT (1-888-275-6636)

MoDOT IMPROVE I-70 DB PROJECT 1

EFK•Moen
Civil Engineering Design
13523 Barrett Parkway Dr Suite 250 St. Louis, MO 63021
Phone 314-394-3100
Fax 314-394-3199
Missouri Certificate of Authority: 001578

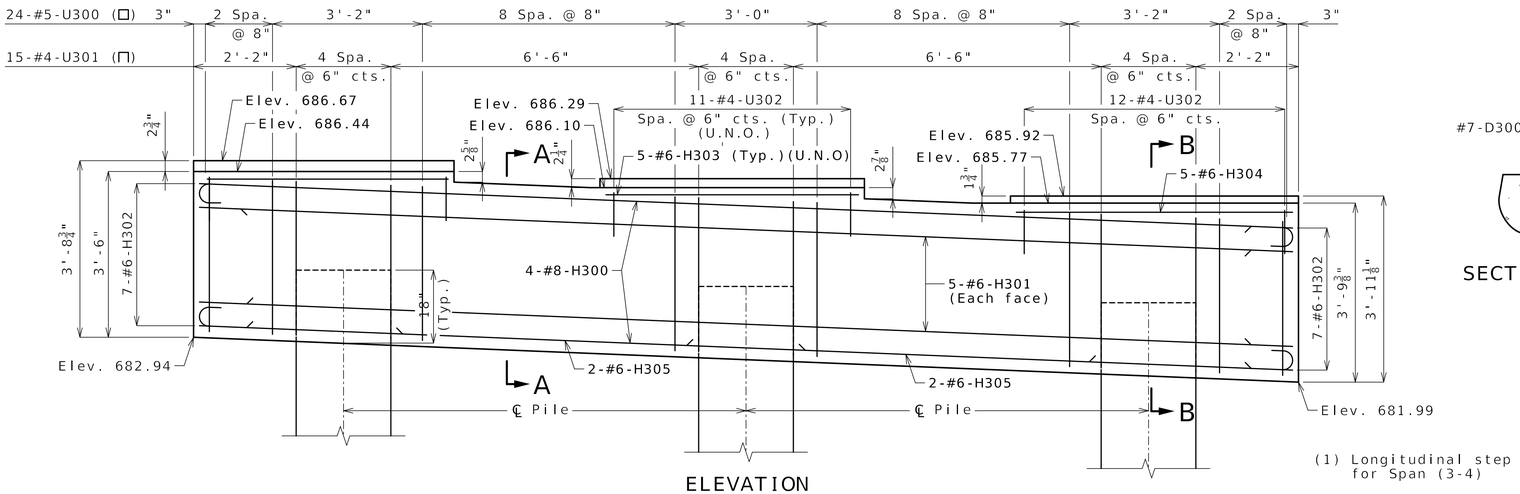

ELEVATION

(1) Longitudinal step for Span (3-4)

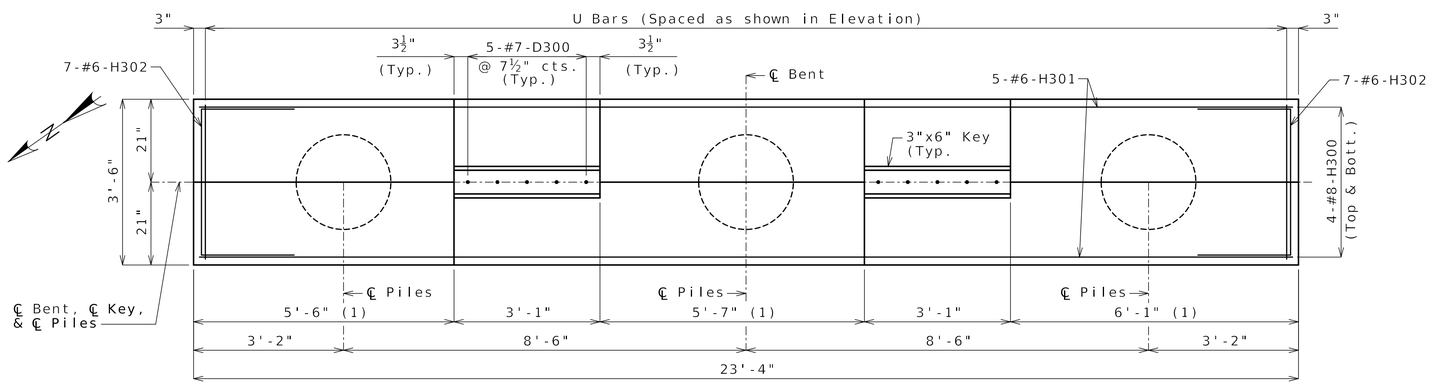

PLAN SHOWING REINFORCEMENT

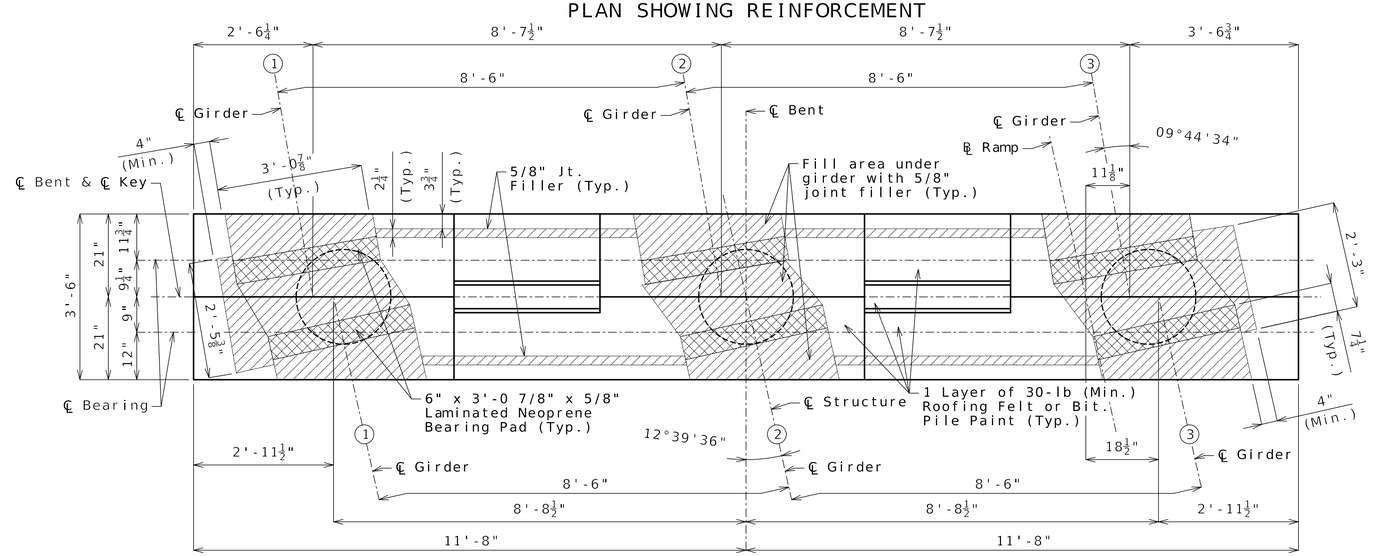

PLAN OF BEAM

DETAILS OF INTERMEDIATE BENT NO. 3

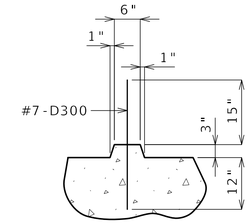

SECTION THRU KEY

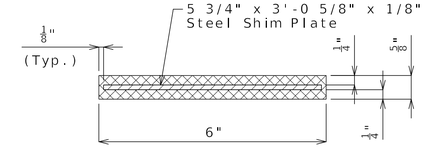

SECTION THRU LAMINATED NEOPRENE BEARING PAD

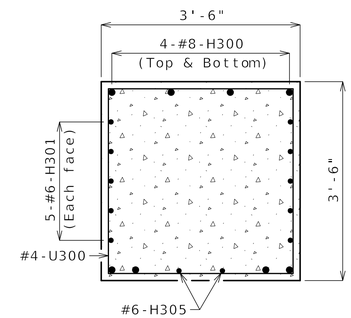

SECTION A-A

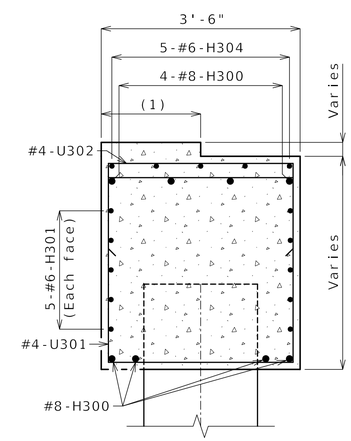

SECTION B-B

Detailed Jan. 2025
Checked Jan. 2025

Note: This drawing is not to scale. Follow dimensions.

STATE OF MISSOURI
ALEX BENZ
NUMBER PE-2018003121
PROFESSIONAL ENGINEER

Alex C. Benz
02/13/2025 11:53:43 AM
Alex Benz - Civil
MO PE-2018003121

DATE PREPARED	
2/12/2025	
ROUTE	STATE
I-70	MO
DISTRICT	SHEET NO.
BR	10
COUNTY	
BOONE	
JOB NO.	
JST0021	
CONTRACT ID.	
PROJECT NO.	
BRIDGE NO.	
A9545	

DATE	DESCRIPTION
12/12/24	REV. A - PRELIMINARY REVIEW
01/31/25	REV. B - FINAL REVIEW
02/14/25	REV. 0 - RELEASED FOR CONSTRUCTION

MISSOURI HIGHWAYS AND TRANSPORTATION COMMISSION
105 WEST CAPITOL
JEFFERSON CITY, MO 65102
1-888-ASK-MODOT (1-888-275-6636)

MoDOT IMPROVE I-70 DB PROJECT 1

EFK•Moen
Civil Engineering Design
13523 Barrett Parkway Dr
Suite 250
St. Louis, MO 63021
Phone 314-394-3100
Fax 314-394-3199
Missouri Certificate of Authority: 001578

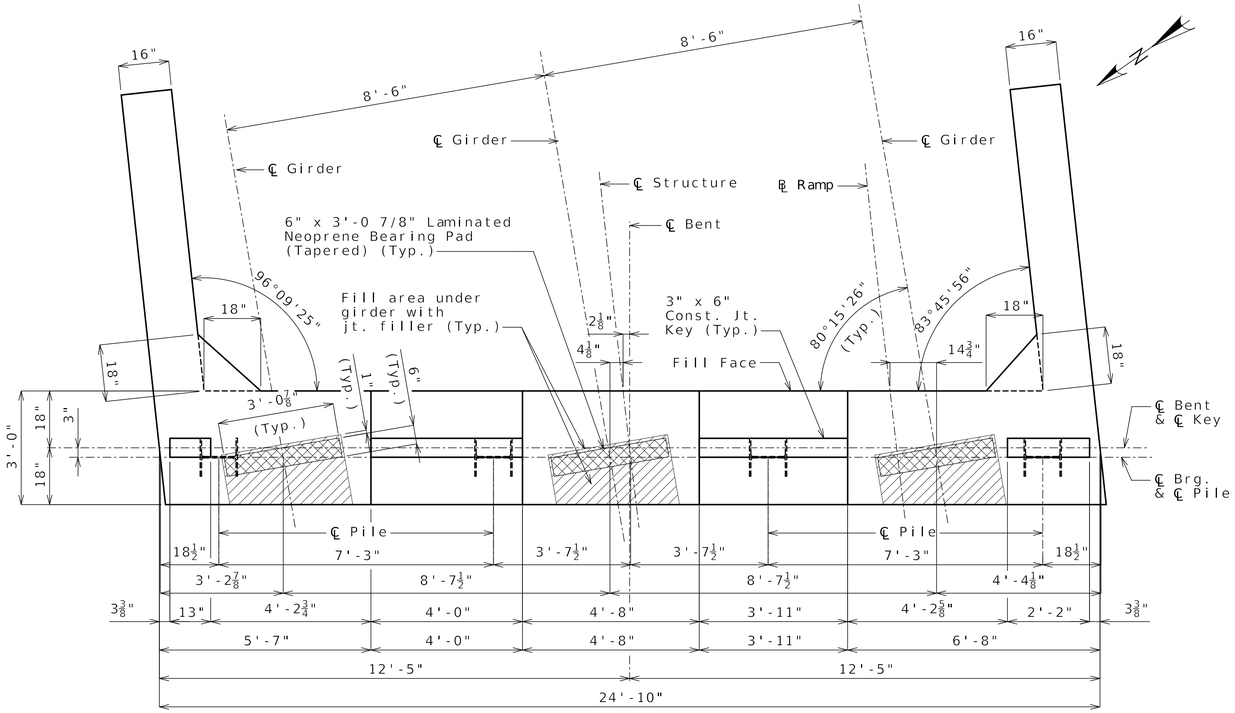

PLAN OF BEAM

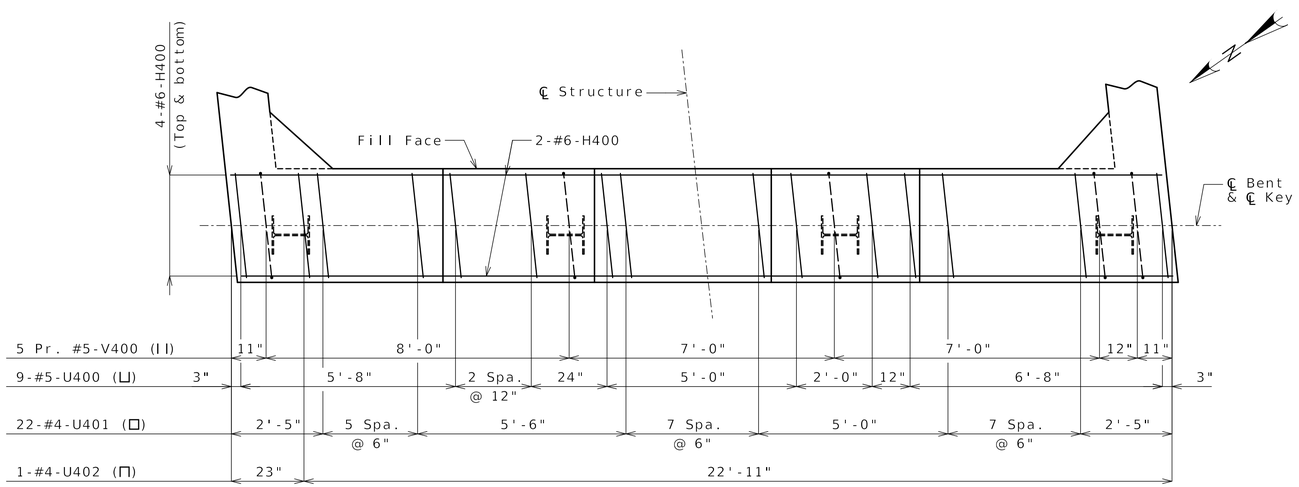

PLAN OF BEAM SHOWING REINFORCEMENT

Keys not shown for clarity.

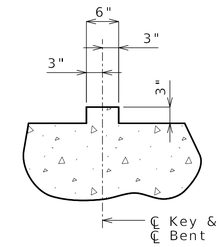

SECTION THRU KEY

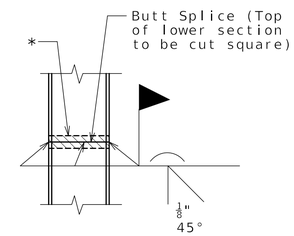

STEEL PILE SPLICE

(If required)

* Galvanizing material shall be omitted or removed one inch clear of weld locations in accordance with Sec 702.

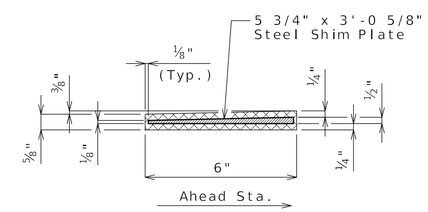

SECTION THRU LAMINATED
NEOPRENE BEARING PAD (TAPERED)

General Notes:

Woek this sheet with Sheets No. 12 & 13.

All U bars and pairs of V bars shall be placed parallel to centerline of roadway.

Reinforcing steel shall be shifted to clear piles.

U bars shall clear piles by at least 1 1/2 inches.

DETAILS OF END BENT NO. 4

Detailed Jan. 2025
Checked Jan. 2025

Note: This drawing is not to scale. Follow dimensions.

STATE OF MISSOURI
ALEX BENZ
NUMBER PE-2018003121
PROFESSIONAL ENGINEER

Alex C. Benz
02/13/2025 11:53:43 AM
Alex Benz - Civil
MO PE-2018003121

DATE PREPARED	
2/12/2025	
ROUTE	STATE
I-70	MO
DISTRICT	SHEET NO.
BR	11
COUNTY	
BOONE	
JOB NO.	
JST0021	
CONTRACT ID.	
PROJECT NO.	
BRIDGE NO.	
A9545	

DATE	DESCRIPTION
12/12/24	REV. A - PRELIMINARY REVIEW
01/31/25	REV. B - FINAL REVIEW
02/14/25	REV. 0 - RELEASED FOR CONSTRUCTION

MISSOURI HIGHWAYS AND TRANSPORTATION COMMISSION
105 WEST CAPITOL
JEFFERSON CITY, MO 65102
1-888-ASK-MODOT (1-888-275-6636)

MoDOT IMPROVE I-70 DB PROJECT 1

EFK•Moen
Civil Engineering Design
13523 Barrett Parkway Dr
Suite 250
St. Louis, MO 63021
Phone 314-394-3100
Fax 314-394-3199
Missouri Certificate of Authority: 001578

REV.

c:\pw_workdir\jacobs-amer-transp\d0181918\B_A9545_011_JST0021_End-Bent-4_1.dgn 3:49:40 PM 2/12/2025

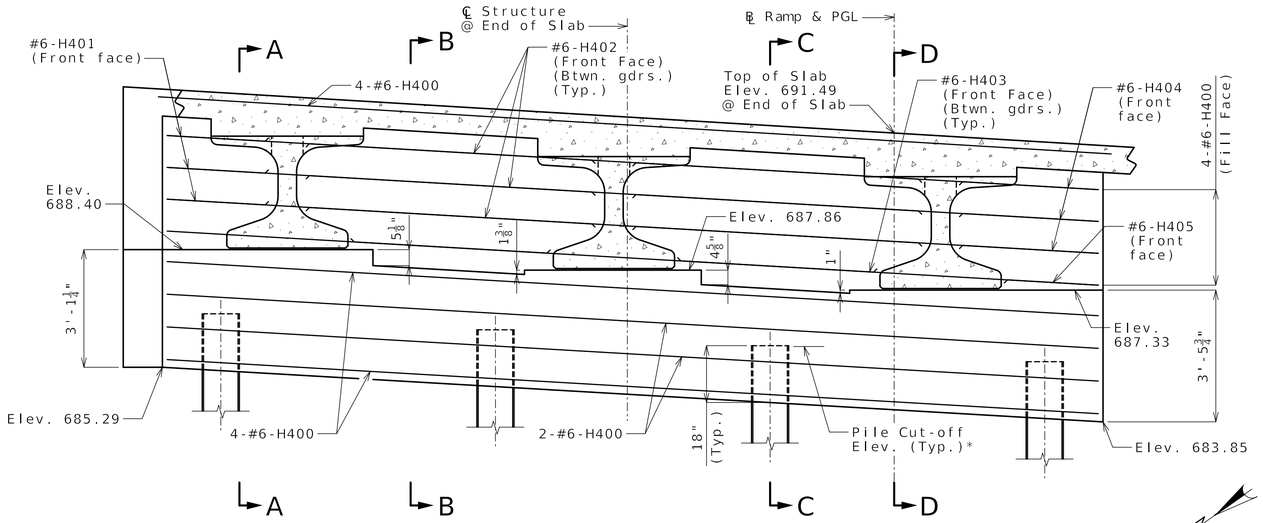

SECTION NEAR END BENT

* See Pile Cut-Off Elev. Table

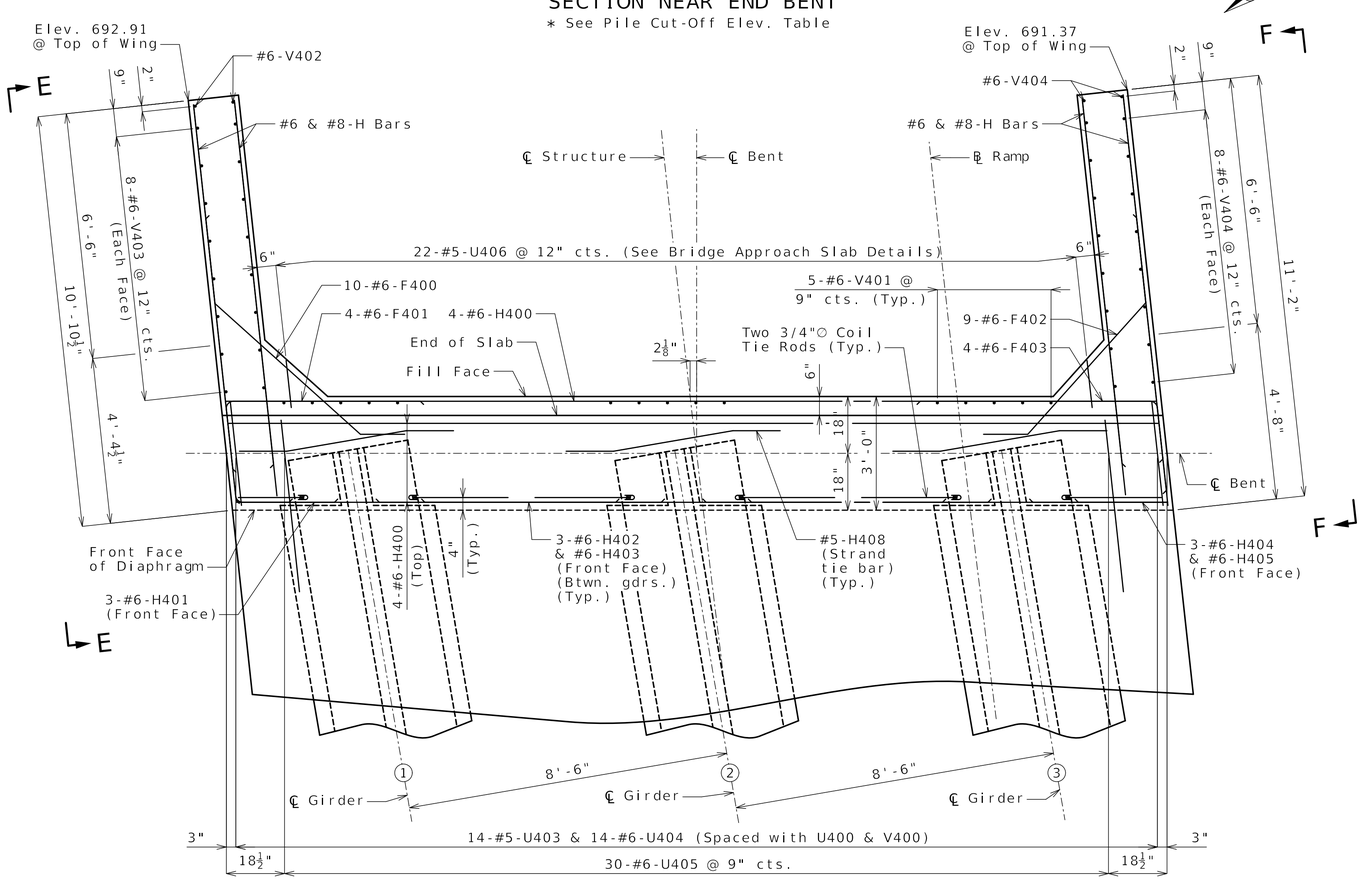

PART PLAN

Pile No.	Cut-Off Elev.
11	686.71
12	686.28
13	685.86
14	685.44

Note: For Pile Numbers, see Sheet No. 34.

Notes:

Work this sheet with Sheets No. 11 & 13.

For Section A-A, B-B, C-C, & D-D and Elevations E-E & F-F, see Sheet No. 13.

The #6-F400 and #6-F402 bars shall be bent in the field to clear girders.

The U bars shall be placed parallel to centerline of roadway.

All concrete in the end bent above top of beam and below top of slab shall be Class B-2.

Strands at end of beams shall be field bent or if necessary cut in field to maintain 1 1/2-inch minimum clearance to fill face of end bent.

For locations of coil tie rods and #5-H408 (strand tie bar), see Sheet No. 17.

For details of vertical drain at end bents, see Sheet No. 8.

For details of bridge approach slab, see Sheet No. 30.

DETAILS OF END BENT NO. 4

Detailed Jan. 2025
Checked Jan. 2025

Note: This drawing is not to scale. Follow dimensions.

STATE OF MISSOURI
ALEX BENZ
NUMBER PE-2018003121
PROFESSIONAL ENGINEER

Alex C. Benz
02/13/2025 11:53:43 AM
Alex Benz - Civil
MO PE-2018003121

DATE PREPARED	
2/12/2025	
ROUTE: I-70	STATE: MO
DISTRICT: BR	SHEET NO.: 12
COUNTY: BOONE	
JOB NO.: JST0021	
CONTRACT ID.	
PROJECT NO.	
BRIDGE NO.: A9545	

DATE	DESCRIPTION
12/12/24	REV. A - PRELIMINARY REVIEW
01/31/25	REV. B - FINAL REVIEW
02/14/25	REV. 0 - RELEASED FOR CONSTRUCTION

MISSOURI HIGHWAYS AND TRANSPORTATION COMMISSION
105 WEST CAPITOL
JEFFERSON CITY, MO 65102
1-888-ASK-MODOT (1-888-275-6636)

MoDOT IMPROVE I-70 DB PROJECT 1

EFK•Moen
Civil Engineering Design
13523 Barrett Parkway Dr
Suite 250
St. Louis, MO 63021
Phone 314-394-3100
Fax 314-394-3199
Missouri Certificate of Authority: 001578

c:\pw_workdir\jacobs-amer-transp\d0181918\B_A9545_012_JST0021_End-Bent-4_2.dgn 3:49:49 PM 2/12/2025

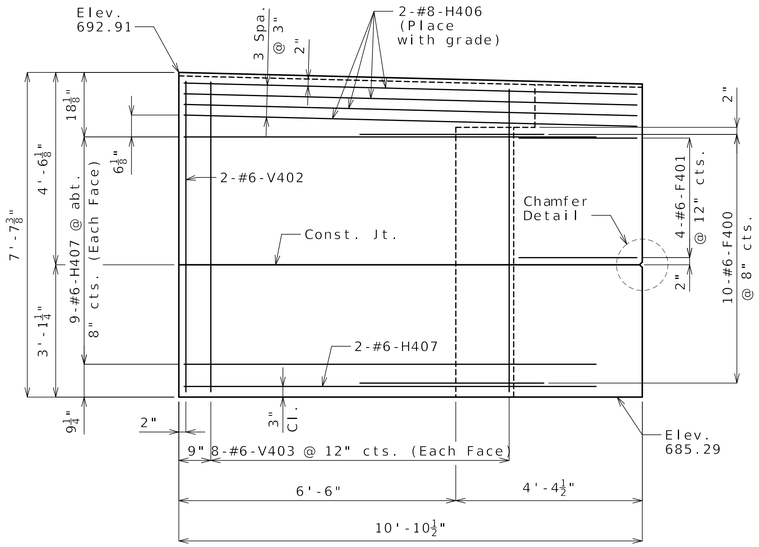

ELEVATION E-E

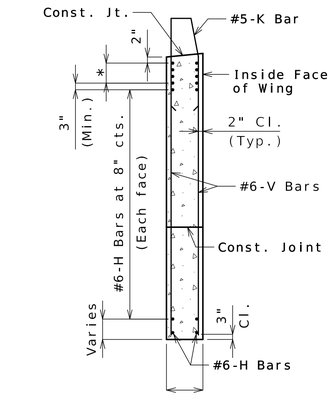

TYPICAL SECTION THRU WING

* #8-H Bars at 3" cts. (Each face)(Place with grade)

(Right wing shown, left wing similar)

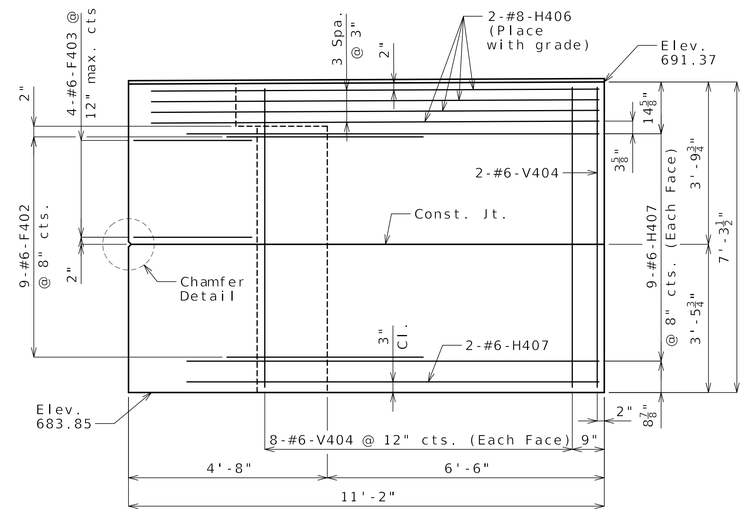

ELEVATION F-F

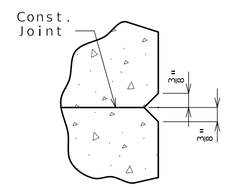

CHAMFER DETAIL

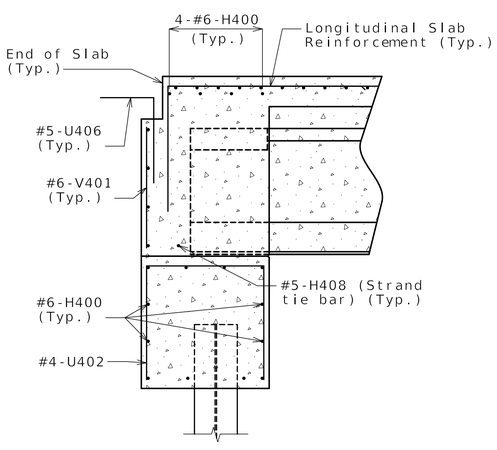

SECTION A-A

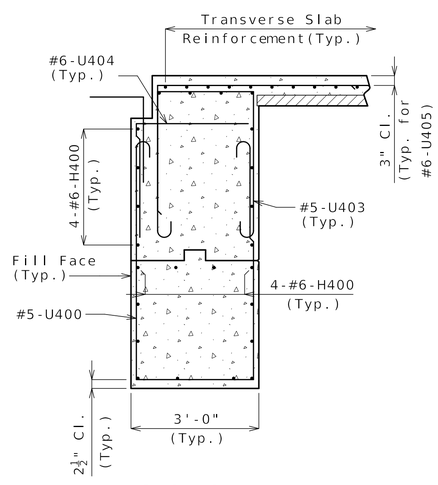

SECTION B-B

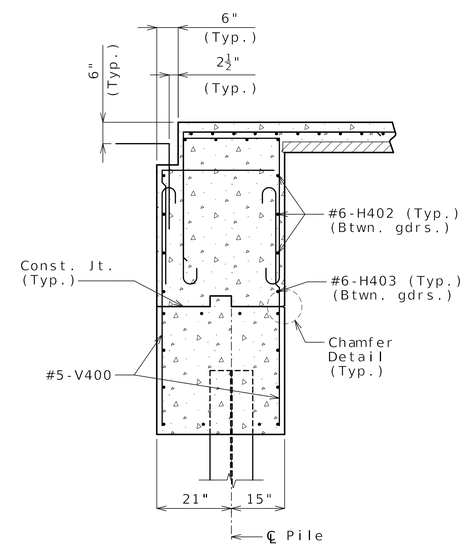

SECTION C-C

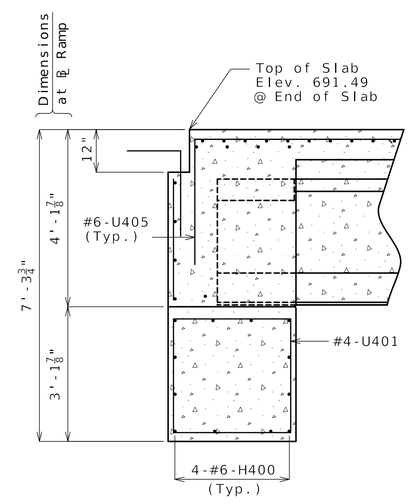

SECTION D-D

Notes:

Work this sheet with Sheets No. 11 & 12.

For reinforcement of the barrier, see Sheets No. 28 & 29.

DETAILS OF END BENT NO. 4

Detailed Jan. 2025
Checked Jan. 2025

Note: This drawing is not to scale. Follow dimensions.

STATE OF MISSOURI
ALEX BENZ
NUMBER PE-2018003121
PROFESSIONAL ENGINEER

Alex C. Benz
02/13/2025 11:53:43 AM
Alex Benz - Civil
MO PE-2018003121

DATE PREPARED	
2/12/2025	
ROUTE	STATE
I-70	MO
DISTRICT	SHEET NO.
BR	13
COUNTY	
BOONE	
JOB NO.	
JST0021	
CONTRACT ID.	
PROJECT NO.	
BRIDGE NO.	
A9545	

DATE	DESCRIPTION
12/12/24	REV. A - PRELIMINARY REVIEW
01/31/25	REV. B - FINAL REVIEW
02/14/25	REV. 0 - RELEASED FOR CONSTRUCTION

MISSOURI HIGHWAYS AND TRANSPORTATION COMMISSION
105 WEST CAPITOL
JEFFERSON CITY, MO 65102
1-888-ASK-MODOT (1-888-275-6636)

MoDOT IMPROVE I-70 DB PROJECT 1

EFK•Moen
Civil Engineering Design
13523 Barrett Parkway Dr
Suite 250
St. Louis, MO 63021
Phone 314-394-3100
Fax 314-394-3199
Missouri Certificate of Authority: 001578

c:\pw_workdir\jacobs-amer-transp\d0181918\B_A9545_013_JST0021_End-Bent-4_3.dgn 3:50:01 PM 2/12/2025

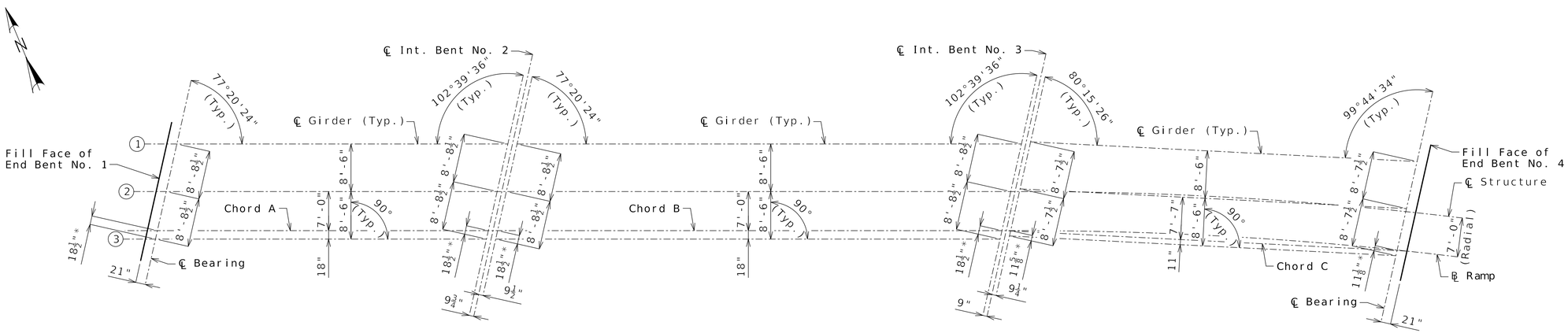

PLAN

Notes:

All dimensions are horizontal.

All bents are parallel.

Girders within a span are parallel to chords.

* Dimensions along centerline of bearing are to Chords A, B and C.

GIRDER LAYOUT

Detailed Jan. 2025
Checked Jan. 2025

Note: This drawing is not to scale. Follow dimensions.

STATE OF MISSOURI
ALEX BENZ
NUMBER PE-2018003121
PROFESSIONAL ENGINEER

Alex C. Benz
02/13/2025 11:53:43 AM
Alex Benz - Civil
MO PE-2018003121

DATE PREPARED	
2/12/2025	
ROUTE	STATE
I-70	MO
DISTRICT	SHEET NO.
BR	14
COUNTY	
BOONE	
JOB NO.	
JST0021	
CONTRACT ID.	
PROJECT NO.	
BRIDGE NO.	
A9545	

DATE	DESCRIPTION
12/12/24	REV. A - PRELIMINARY REVIEW
01/31/25	REV. B - FINAL REVIEW
02/14/25	REV. 0 - RELEASED FOR CONSTRUCTION

MISSOURI HIGHWAYS AND TRANSPORTATION COMMISSION

MoDOT
105 WEST CAPITOL
JEFFERSON CITY, MO 65102
1-888-ASK-MODOT (1-888-275-6636)

MoDOT IMPROVE I-70 DB PROJECT 1

EFK•Moen
Civil Engineering Design
13523 Barrett Parkway Dr
Suite 250
St. Louis, MO 63021
Phone 314-394-3100
Fax 314-394-3199
Missouri Certificate of Authority: 001578

(1) Fabricator shall apply a bond breaker to this region excluding where joint filler will be applied.

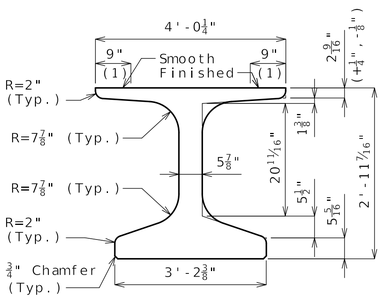

DIMENSIONS

(2) Outer strands tensioned to 2.02 kips/strand and inner strands to 8 kips/strand. Placed symmetrical about ℄ Girder. May be moved laterally in pairs.

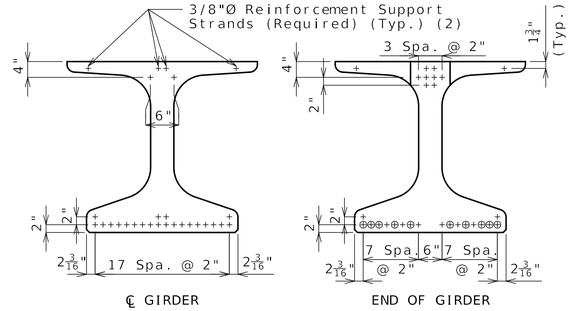

STRAND ARRANGEMENT

+ Indicates prestressing strand.

○ Indicates cut & shop bend with 3'-0" projection.

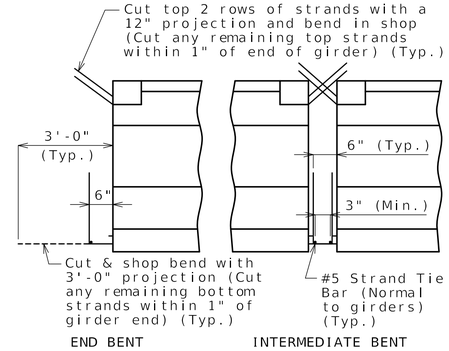

STRANDS AT GIRDER ENDS

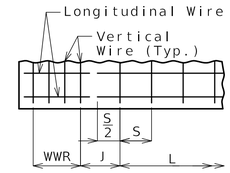

WELDED WIRE PLACEMENT

S = Vertical wire spacing

L = Length of WWR mats

J = Distance between WWR mats

Bill of Reinforcing Steel

Bars Each Girder				
No.	Size/Mark		Length	Shape
82	3	G1	2'-10"	8
2	4	G3	3'-11⅜"	20
2	4	G4	2'-3"	20
2	4	G5	2'-8⅞"	20
2	4	G6	3'-10⅞"	20

Welded Wire Each Girder					
Mark	Size	S	W	L	J
WWR1	D22	4"	W9	7'8"	6¼"
WWR2	D22	8"	W9	8'-0"	11"
WWR3	D22	12"	W9	22'-0"	--
WWR6	D31	2"	W12	16"	4"

Bending Diagrams

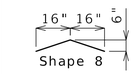

Shape 20

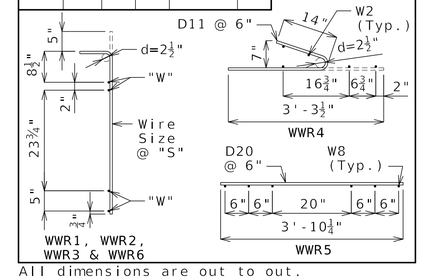

All dimensions are out to out.

Hooks and bends shall be in accordance with the CRSI Manual of Standard Practice for Detailing Reinforced Concrete Structures, Stirrup and Tie Dimensions.

Actual bar lengths are measured along centerline of bar to the nearest inch.

Minimum clearance to reinforcing shall be 1", unless otherwise shown.

All bar reinforcement shall be Grade 60.

WWR shall not be epoxy coated.

G4 and G5 not required for interior girders. G3 and G6 not required for exterior girders of intermediate spans. Half no. of G3, G4, G5 and G6 not required for ext. girders of end spans.

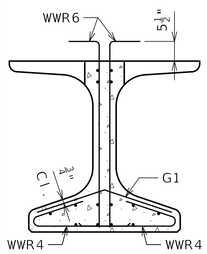

SECTION A-A

Strands not shown for clarity.

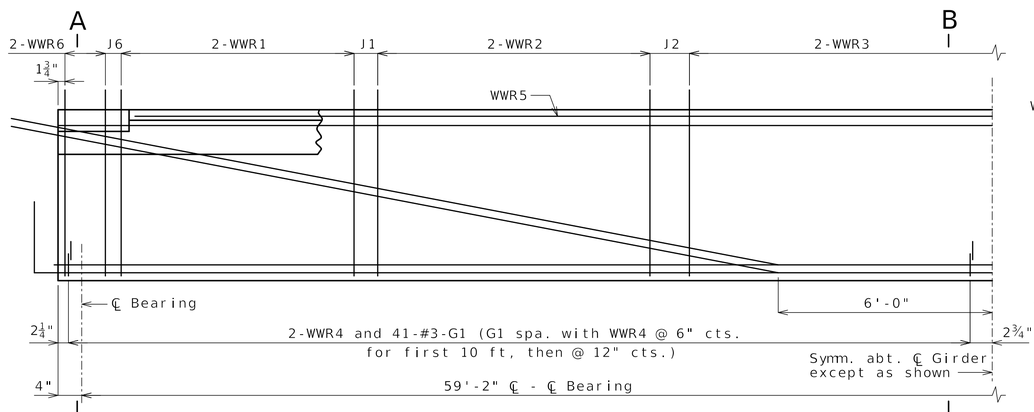

HALF ELEVATION

Reinforcement support strands not shown for clarity.

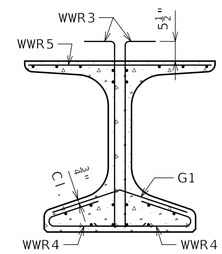

SECTION B-B

Strands not shown for clarity.

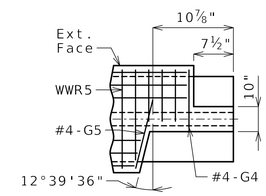

LEFT EXTERIOR GIRDER AT INTERMEDIATE BENT

Similar for right ext.

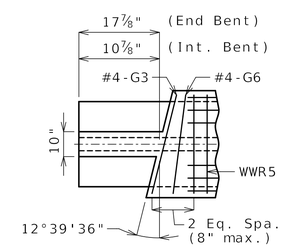

INTERIOR GIRDER AT ALL BENTS & EXTERIOR GIRDER AT END BENT

TOP FLANGE BLOCKOUT

General Notes:

Concrete for prestressed beams shall be Class A-1 with f'c = 8000 psi and f'ci = 6500 psi.

Use 24 strands, 0.6"Ø Grade 270, with an initial prestress force of 1055 kips.

Pretensioned members shall be in accordance with Sec 1029.

Fabricator shall be responsible for location and design of lifting devices.

Exterior and interior girders are the same except: coil ties, top flange blockout, coil inserts for slab drains.

The contractor shall provide bracing necessary for lateral and torsional stability of the girders during construction of the concrete slab and remove the bracing after the slab has attained 75% design strength. Contractor shall not drill holes in the girders.

For Girder Camber Diagram, see Sheet No. 21.

For location of coil inserts at slab drains, see Sheet No. 20.

For location of coil ties at concrete diaphragms and integral bents, see Sheets No. 6 and 18.

Alternate bar reinforcing steel details are provided and may be used. The same type of reinforcing steel shall be used for all girders in all spans.

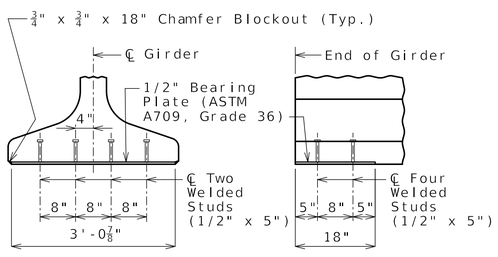

END VIEW

SIDE VIEW

BEARING PLATE

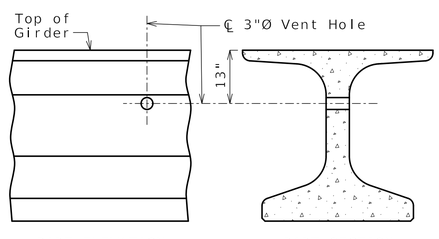

PART ELEVATION

PART SECTION

VENT HOLE

Place vent holes at or near upgrade 1/3 point of girders and clear reinforcing steel or strands by 1 1/2" minimum.

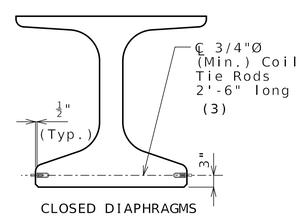

CLOSED DIAPHRAGMS AND INTEGRAL BENTS

COIL TIES

Exclude coil tie at exterior face of exterior girders except at integral end bents.

(3) 2'-0" at exterior face of exterior girders at end bents

NU-GIRDERS - SPAN (1-2)

Detailed Jan. 2025
Checked Jan. 2025

Note: This drawing is not to scale. Follow dimensions.

STATE OF MISSOURI ALEX BENZ NUMBER PE-2018003121 PROFESSIONAL ENGINEER

Alex C. Benz
02/13/2025 11:53:44 AM
Alex Benz - Civil
MO PE-2018003121

DATE PREPARED	
2/12/2025	
ROUTE	STATE
I-70	MO
DISTRICT	SHEET NO.
BR	15
COUNTY	
BOONE	
JOB NO.	
JST0021	
CONTRACT ID.	
PROJECT NO.	
BRIDGE NO.	
A9545	

DATE	DESCRIPTION
12/12/24	REV. A - PRELIMINARY REVIEW
01/31/25	REV. B - FINAL REVIEW
02/14/25	REV. 0 - RELEASED FOR CONSTRUCTION

MISSOURI HIGHWAYS AND TRANSPORTATION COMMISSION

105 WEST CAPITOL
JEFFERSON CITY, MO 65102
1-888-ASK-MODOT (1-888-275-6636)

MoDOT IMPROVE I-70 DB PROJECT 1

EFK•Moen
Civil Engineering Design
13523 Barrett Parkway Dr Suite 250 St. Louis, MO 63021
Phone 314-394-3100
Fax 314-394-3199
Missouri Certificate of Authority: 001578

(1) Fabricator shall apply a bond breaker to this region excluding where joint filler will be applied.

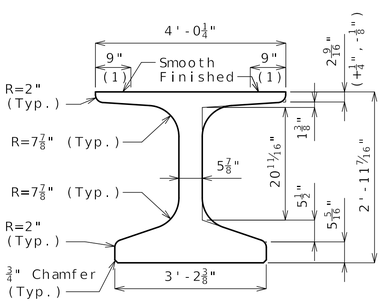

DIMENSIONS AT SECTION B-B

(2) Outer strands tensioned to 2.02 kips/strand and inner strands to 8 kips/strand. Placed symmetrical about ℄ Girder. May be moved laterally in pairs.

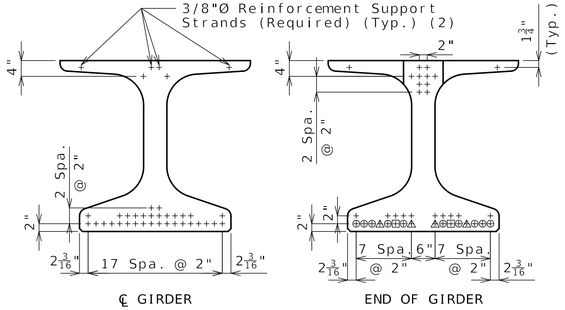

STRAND ARRANGEMENT

+ Indicates prestressing strand.

All strands are fully bonded unless otherwise noted.

○ Indicates cut & shop bend with 3'-0" projection.

□ Indicates debonded for 2'-0" from end of girder

△ Indicates debonded for 5'-0" from end of girder

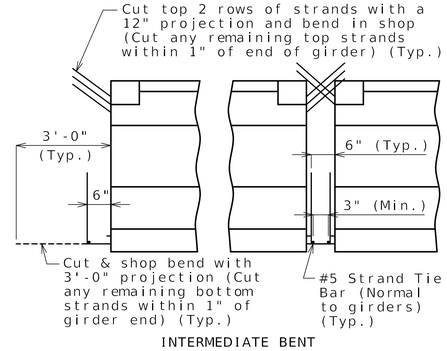

STRANDS AT GIRDER ENDS

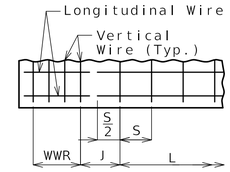

WELDED WIRE PLACEMENT

S = Vertical wire spacing

L = Length of WWR mats

J = Distance between WWR mats

Bill of Reinforcing Steel

Bars Each Girder

No.	Size/Mark		Length	Shape
112	3	G1	2'-10"	8
2	4	G3	3'-11⅜"	20
2	4	G4	2'-3"	20
2	4	G5	2'-8⅞"	20
2	4	G6	3'-10⅞"	20

Welded Wire Each Girder

Mark	Size	S	W	L	J
WWR1	D31	4"	W12	8'-0"	4¼"
WWR2	D31	8"	W12	13'-4"	11"
WWR3	D31	12"	W12	42'-0"	--
WWR6	D31	2"	W12	16"	4"

Bending Diagrams

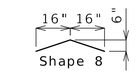

Shape 20

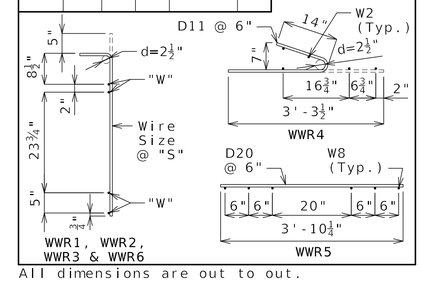

All dimensions are out to out.

Hooks and bends shall be in accordance with the CRSI Manual of Standard Practice for Detailing Reinforced Concrete Structures, Stirrup and Tie Dimensions.

Actual bar lengths are measured along centerline of bar to the nearest inch.

Minimum clearance to the reinforcing shall be 1", unless otherwise shown.

All bar reinforcement shall be Grade 60.

WWR shall not be epoxy coated.

G4 and G5 not required for interior girders. G3 and G6 not required for exterior girders of intermediate spans.

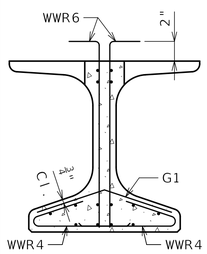

SECTION A-A

Strands not shown for clarity.

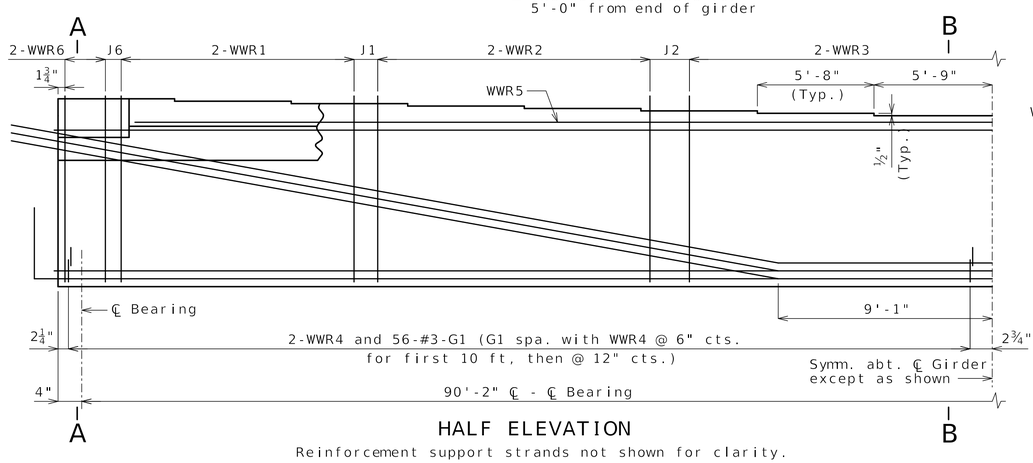

HALF ELEVATION

Reinforcement support strands not shown for clarity.

Note: Seven vertical steps at 1/2" in height included in each end of girder for total added height of 3 1/2".

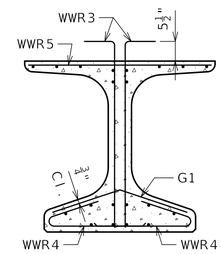

SECTION B-B

Strands not shown for clarity.

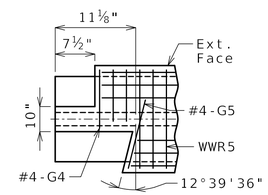

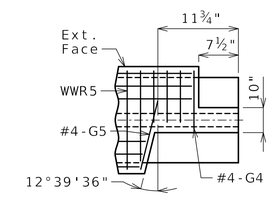

LEFT EXTERIOR GIRDER AT INTERMEDIATE BENT

Similar for right ext.

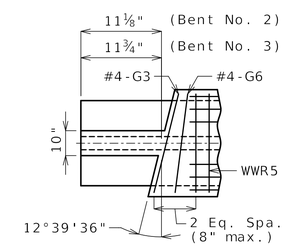

INTERIOR GIRDER AT ALL BENTS

TOP FLANGE BLOCKOUT

General Notes:

Concrete for prestressed beams shall be Class A-1 with f'c = 8000 psi and f'ci = 6500 psi.

Use 34 strands, 0.6"Ø Grade 270, with an initial prestress force of 1494 kips.

Pretensioned members shall be in accordance with Sec 1029.

Fabricator shall be responsible for location and design of lifting devices.

Exterior and interior girders are the same except: coil ties, top flange blockout, coil inserts for slab drains.

The contractor shall provide bracing necessary for lateral and torsional stability of the girders during construction of the concrete slab and remove the bracing after the slab has attained 75% design strength. Contractor shall not drill holes in the girders.

For Girder Camber Diagram, see Sheet No. 21.

For location of coil inserts at slab drains, see Sheet No. 20.

For location of coil ties at concrete diaphragms and integral bents, see Sheets No. 9, 10 and 18.

Alternate bar reinforcing steel details are provided and may be used. The same type of reinforcing steel shall be used for all girders in all spans.

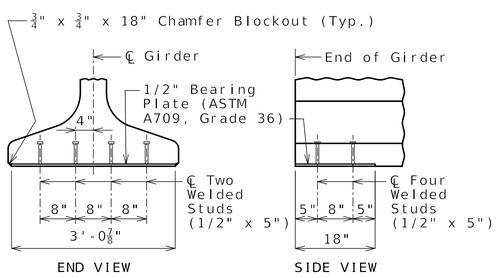

BEARING PLATE

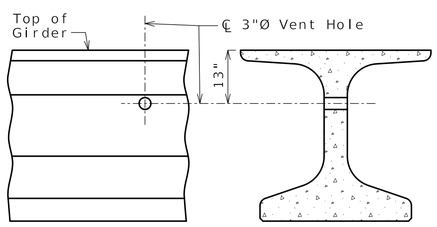

VENT HOLE

Place vent holes at or near upgrade 1/3 point of girders and clear reinforcing steel or strands by 1 1/2" minimum.

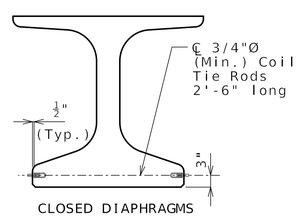

COIL TIES

Exclude coil tie at exterior face of exterior girders except at integral end bents.

NU-GIRDERS - SPAN (2-3)

Detailed Jan. 2025
Checked Jan. 2025

Note: This drawing is not to scale. Follow dimensions.

STATE OF MISSOURI ALEX BENZ NUMBER PE-2018003121 PROFESSIONAL ENGINEER

Alex C. Benz
02/13/2025 11:53:44 AM
Alex Benz - Civil
MO PE-2018003121

DATE PREPARED	
2/12/2025	
ROUTE	STATE
I-70	MO
DISTRICT	SHEET NO.
BR	16
COUNTY	
BOONE	
JOB NO.	
JST0021	
CONTRACT ID.	
PROJECT NO.	
BRIDGE NO.	
A9545	

DATE	DESCRIPTION
12/12/24	REV. A - PRELIMINARY REVIEW
01/31/25	REV. B - FINAL REVIEW
02/14/25	REV. 0 - RELEASED FOR CONSTRUCTION

MISSOURI HIGHWAYS AND TRANSPORTATION COMMISSION
105 WEST CAPITOL
JEFFERSON CITY, MO 65102
1-888-ASK-MODOT (1-888-275-6636)

MoDOT IMPROVE I-70 DB PROJECT 1

EFK•Moen
Civil Engineering Design
13523 Barrett Parkway Dr Suite 250 St. Louis, MO 63021
Phone 314-394-3100
Fax 314-394-3199
Missouri Certificate of Authority: 001578

(1) Fabricator shall apply a bond breaker to this region excluding where joint filler will be applied.

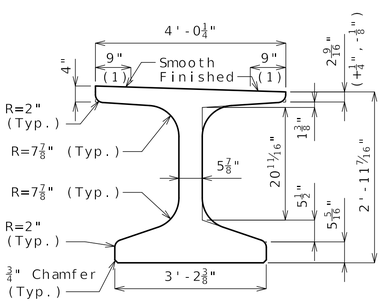

DIMENSIONS AT SECTION B-B

(2) Outer strands tensioned to 2.02 kips/strand and inner strands to 8 kips/strand. Placed symmetrical about ℄ Girder. May be moved laterally in pairs.

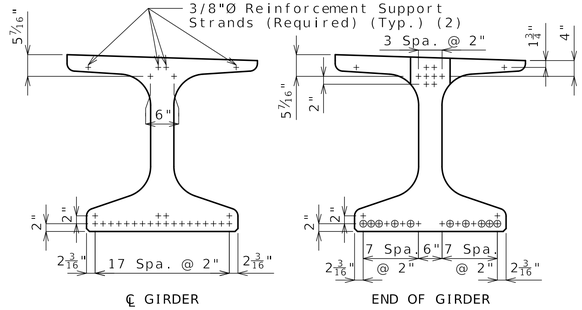

℄ GIRDER END OF GIRDER

STRAND ARRANGEMENT

+ Indicates prestressing strand.

○ Indicates cut & shop bend with 3'-0" projection.

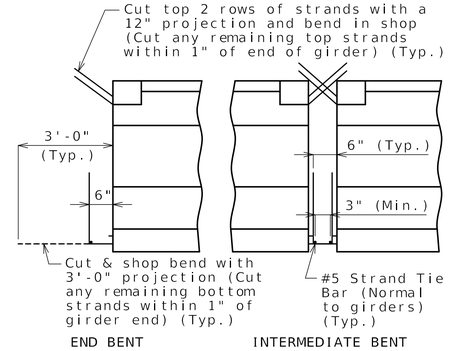

END BENT INTERMEDIATE BENT

STRANDS AT GIRDER ENDS

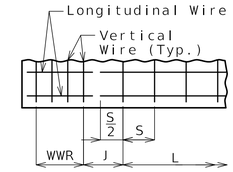

WELDED WIRE PLACEMENT

S = Vertical wire spacing

L = Length of WWR mats

J = Distance between WWR mats

Bill of Reinforcing Steel

Bars Each Girder

No.	Size/Mark		Length	Shape
92	3	G1	2'-10"	8
2	4	G3	3'-10⅞"	20
2	4	G4	2'-3"	20
2	4	G5	2'-8⅜"	20
2	4	G6	3'-10⅝"	20

Welded Wire Each Girder

Mark	Size	S	W	L	J
WWR1	D22	4"	W9	10'-0"	6¼"
WWR2	D22	8"	W9	4'-8"	11"
WWR3	D22	12"	W9	34'-0"	--
WWR6	D31	2"	W12	16"	4"

Bending Diagrams

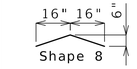

Shape 20

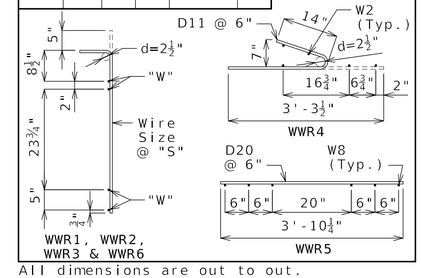

All dimensions are out to out.

Hooks and bends shall be in accordance with the CRSI Manual of Standard Practice for Detailing Reinforced Concrete Structures, Stirrup and Tie Dimensions.

Actual bar lengths are measured along centerline of bar to the nearest inch.

Minimum clearance to the reinforcing shall be 1", unless otherwise shown.

All bar reinforcement shall be Grade 60.

WWR shall not be epoxy coated.

G4 and G5 not required for interior girders. Half no. of G3, G4 and G5 not required for ext. girders of end spans.

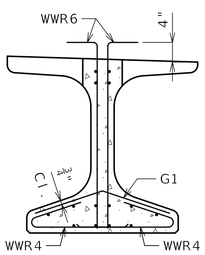

SECTION A-A

Strands not shown for clarity.

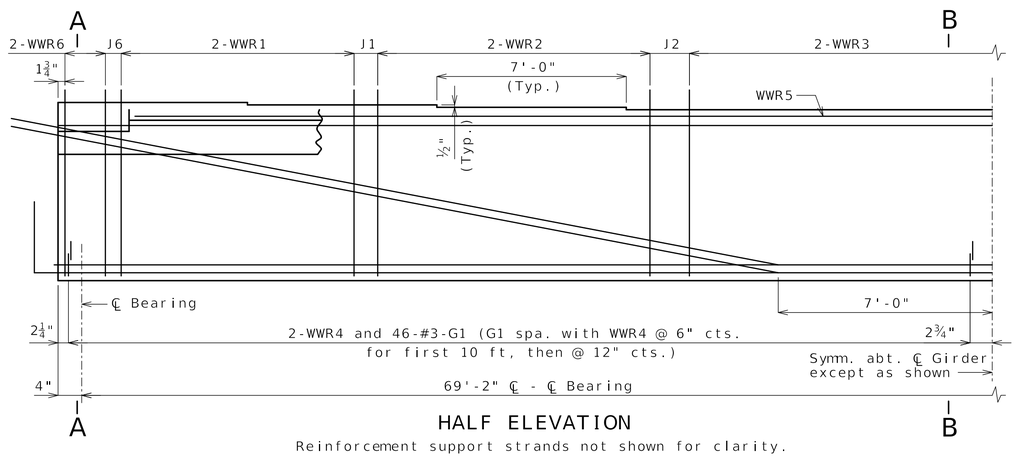

HALF ELEVATION

Reinforcement support strands not shown for clarity.

Note: Three vertical steps at 1/2" in height included in each end of girder for total added height of 1 1/2".

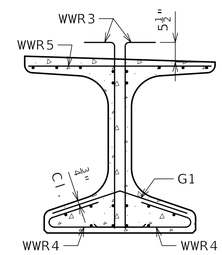

SECTION B-B

Strands not shown for clarity.

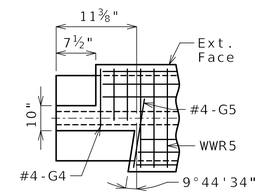

LEFT EXTERIOR GIRDER AT INTERMEDIATE BENT

Similar for right ext.

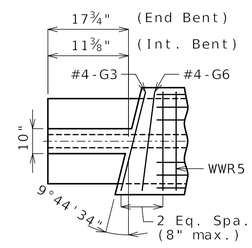

INTERIOR GIRDER AT ALL BENTS & EXTERIOR GIRDER AT END BENT

TOP FLANGE BLOCKOUT

General Notes:

Concrete for prestressed beams shall be Class A-1 with f'c = 8000 psi and f'ci = 6500 psi.

Use 24 strands, 0.6"Ø Grade 270, with an initial prestress force of 1055 kips.

Pretensioned members shall be in accordance with Sec 1029.

Fabricator shall be responsible for location and design of lifting devices.

Exterior and interior girders are the same except: coil ties, top flange blockout.

The contractor shall provide bracing necessary for lateral and torsional stability of the girders during construction of the concrete slab and remove the bracing after the slab has attained 75% design strength. Contractor shall not drill holes in the girders.

For Girder Camber Diagram, see Sheet No. 21.

For location of coil ties at concrete diaphragms and integral bents, see Sheets No. 10, 12 and 18.

Alternate bar reinforcing steel details are provided and may be used. The same type of reinforcing steel shall be used for all girders in all spans.

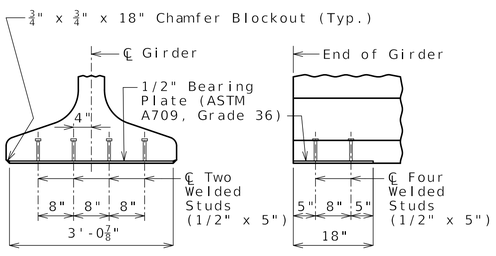

END VIEW SIDE VIEW

BEARING PLATE

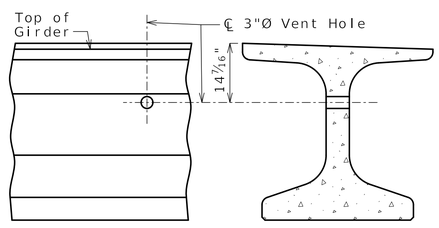

PART ELEVATION PART SECTION

VENT HOLE

Place vent holes at or near upgrade 1/3 point of girders and clear reinforcing steel or strands by 1 1/2" minimum.

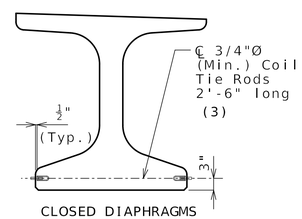

CLOSED DIAPHRAGMS AND INTEGRAL BENTS

COIL TIES

Exclude coil tie at exterior face of exterior girders except at integral end bents.

(3) 1'-6" at exterior face of exterior girders at end bents

NU-GIRDERS - SPAN (3-4)

Detailed Jan. 2025
Checked Jan. 2025

Note: This drawing is not to scale. Follow dimensions.

STATE OF MISSOURI ALEX BENZ NUMBER PE-2018003121 PROFESSIONAL ENGINEER

Alex C. Benz
02/13/2025 11:53:44 AM
Alex Benz - Civil
MO PE-2018003121

DATE PREPARED	
2/12/2025	
ROUTE	STATE
I-70	MO
DISTRICT	SHEET NO.
BR	17
COUNTY	
BOONE	
JOB NO.	
JST0021	
CONTRACT ID.	
PROJECT NO.	
BRIDGE NO.	
A9545	

DATE	DESCRIPTION
12/12/24	REV. A - PRELIMINARY REVIEW
01/31/25	REV. B - FINAL REVIEW
02/14/25	REV. 0 - RELEASED FOR CONSTRUCTION

MISSOURI HIGHWAYS AND TRANSPORTATION COMMISSION

105 WEST CAPITOL
JEFFERSON CITY, MO 65102
1-888-ASK-MODOT (1-888-275-6636)

MoDOT IMPROVE I-70 DB PROJECT 1

EFK•Moen
Civil Engineering Design
13523 Barrett Parkway Dr Suite 250
St. Louis, MO 63021
Phone 314-394-3100
Fax 314-394-3199
Missouri Certificate of Authority: 001578

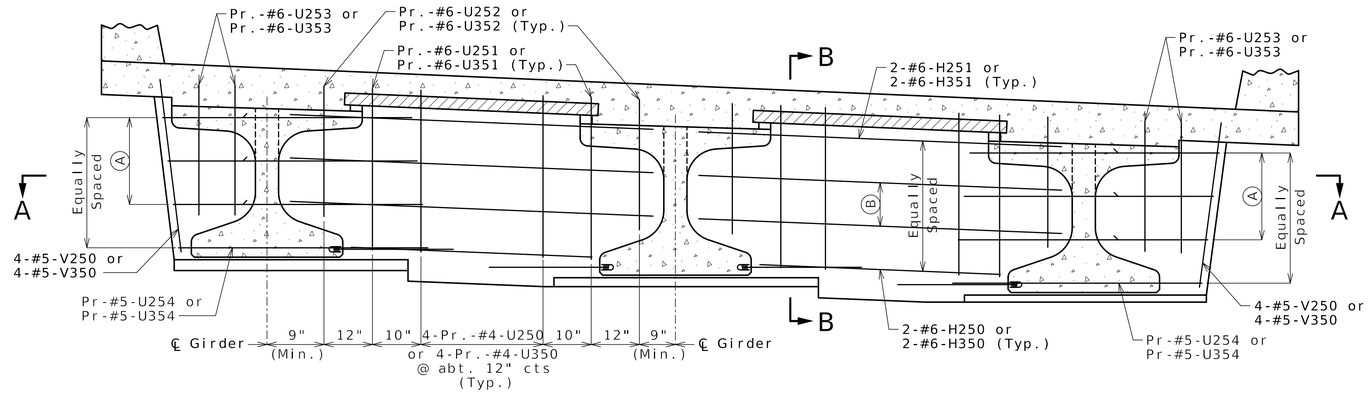

Ⓐ 3-Pr.-#5-U255 or 3-Pr.-#5-U355

Ⓑ 2-#4-H252 or 2-#4-H352 (Ea. face)(Typ.)

SECTION NEAR INTERMEDIATE BENT

(Normal to ℄ Structure)

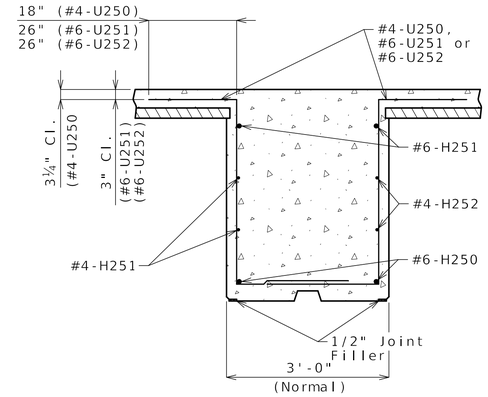

SECTION B-B

Int. Bent No. 2 shown,
Int. Bent No. 3 similar

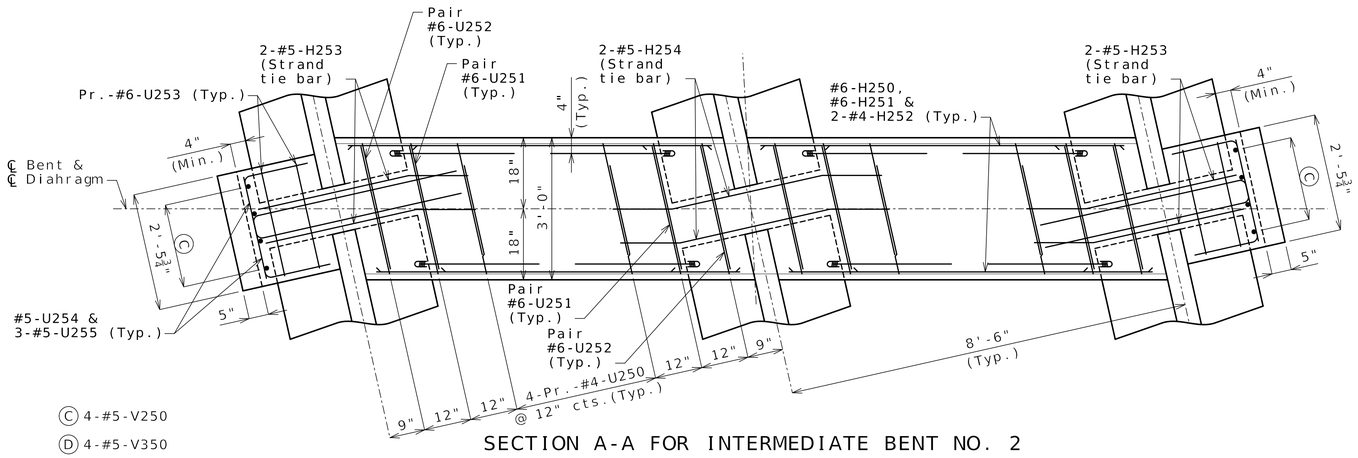

Ⓒ 4-#5-V250

Ⓓ 4-#5-V350

SECTION A-A FOR INTERMEDIATE BENT NO. 2

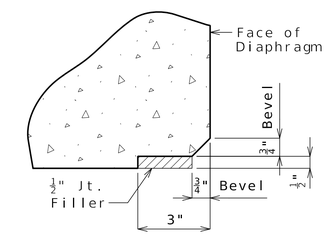

EDGE DETAIL

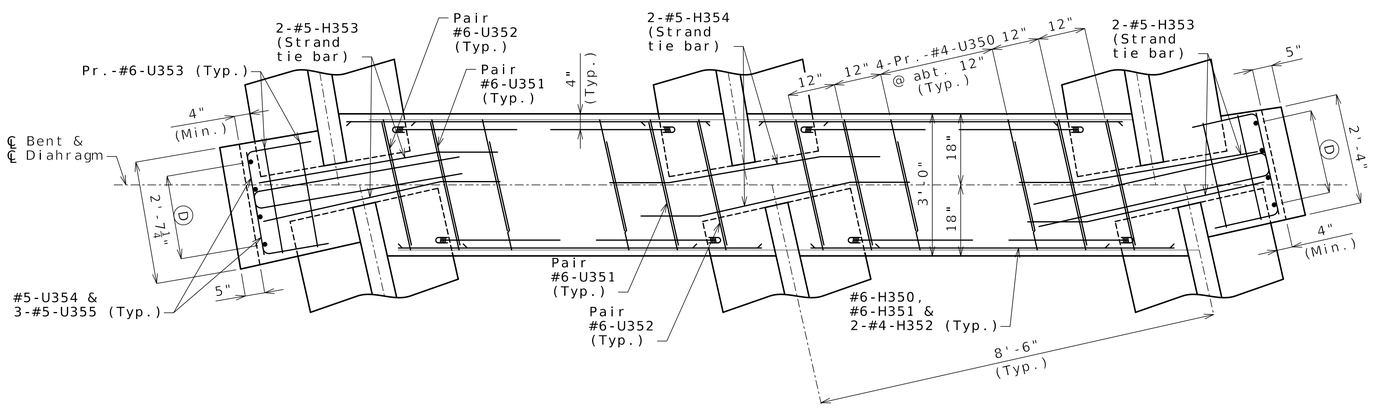

SECTION A-A FOR INTERMEDIATE BENT NO. 3

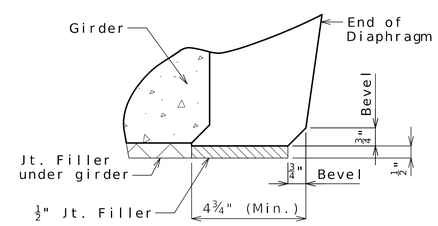

END DETAIL

Notes:

For locations of Strand Tie Bars, see Sheets No. 15-17.

For location and details of Coil Tie Rods, see Sheets No. 15-17.

Diaphragms at intermediate bents shall be built vertical.

All U-bars in diaphragms are to be placed parallel to ℄ Roadway.

CONCRETE DIAPHRAGMS AT INTERMEDIATE BENTS

Detailed Jan. 2025
Checked Jan. 2025

Note: This drawing is not to scale. Follow dimensions.

STATE OF MISSOURI
ALEX BENZ
NUMBER PE-2018003121
PROFESSIONAL ENGINEER

Alex C. Benz
02/13/2025 11:53:44 AM
Alex Benz - Civil
MO PE-2018003121

DATE PREPARED	
2/12/2025	
ROUTE	STATE
I-70	MO
DISTRICT	SHEET NO.
BR	18
COUNTY	
BOONE	
JOB NO.	
JST0021	
CONTRACT ID.	
PROJECT NO.	
BRIDGE NO.	
A9545	

DATE	DESCRIPTION
01/31/25	REV. B - FINAL REVIEW
02/14/25	REV. 0 - RELEASED FOR CONSTRUCTION

MISSOURI HIGHWAYS AND TRANSPORTATION COMMISSION
105 WEST CAPITOL
JEFFERSON CITY, MO 65102
1-888-ASK-MODOT (1-888-275-6636)

MoDOT IMPROVE I-70 DB PROJECT 1

EFK•Moen
Civil Engineering Design
13523 Barrett Parkway Dr Suite 250 St. Louis, MO 63021
Phone 314-394-3100
Fax 314-394-3199
Missouri Certificate of Authority: 001578

c:\pw_workdir\jacobs-amer-transp\d0181918\B_A9545_018_JST0021_Int-Bent-Diaph.dgn 3:50:52 PM 2/12/2025

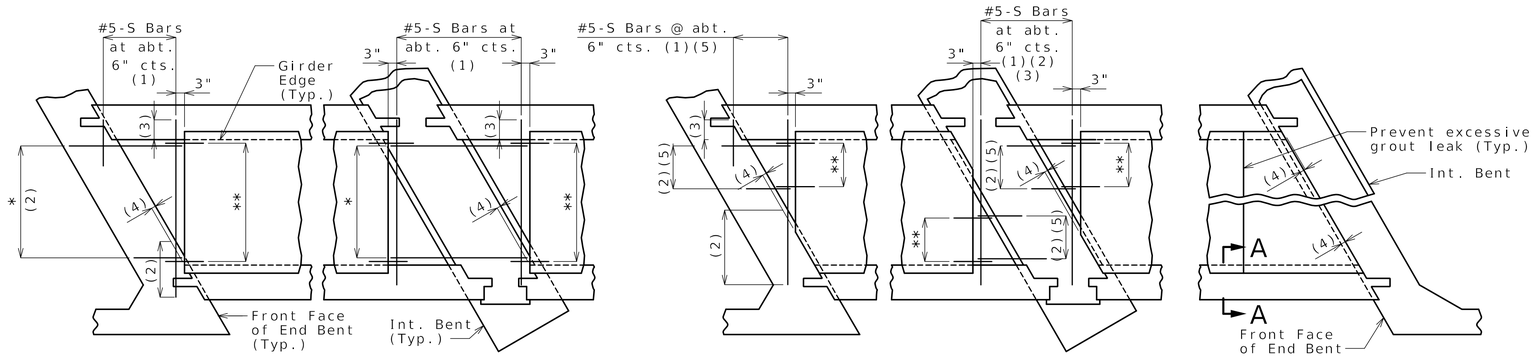

SQUARED END PANELS OR TRUNCATED END PANELS

PLAN SHOWING PANEL PLACEMENT

* #5-S Bars at abt. 9" cts. (1)
** #3-P1 at 12" cts. (End panels only)

SKEWED END PANELS

Joint Filler Dimensions		
Width	Height	
	Min.	Max.
3"	1"	4"

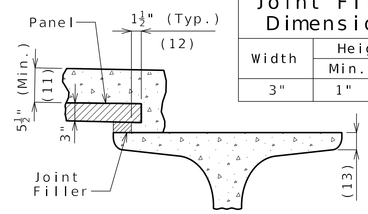

SECTION A-A

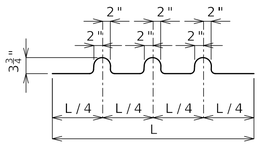

BENDING DIAGRAM FOR U1 BAR

U1 Bars may be oriented at right angles to location and spacing shown. U1 Bars shall be placed between P1 bars.

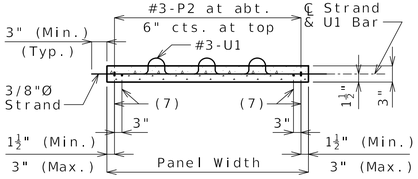

SECTION B-B

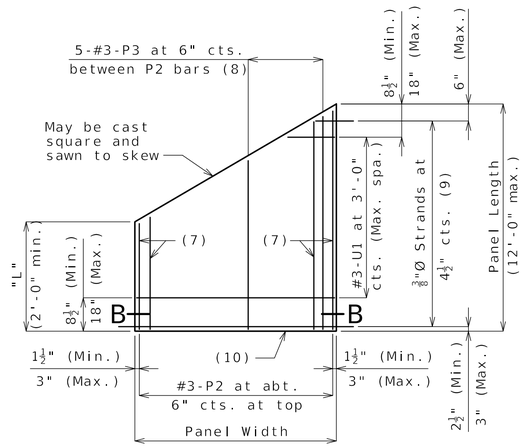

PLAN OF OPTIONAL SKEWED END PANEL

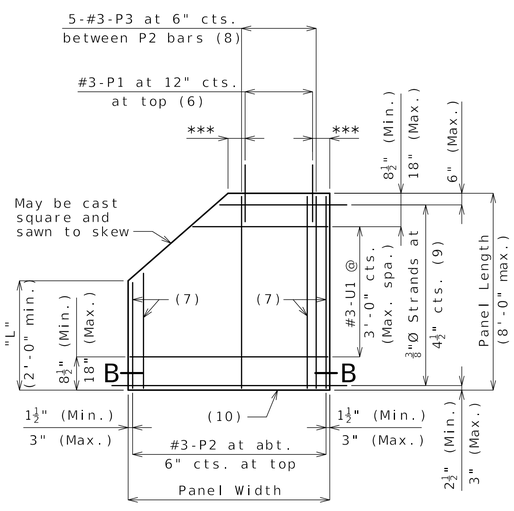

PLAN OF OPTIONAL TRUNCATED END PANEL

*** 3" (Min.), 6" (Max.)

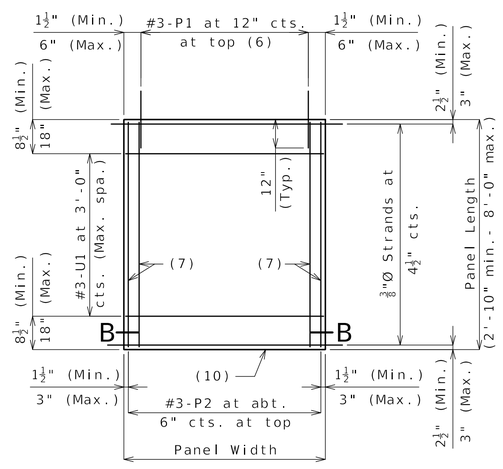

PLAN OF SQUARED PANEL

PRESTRESSED PANELS

Reference Notes:

Plan of Panel Placement:
(1) S-bars shown are bottom steel in slab between panels and used with squared and truncated end panels only.

(2) Extend S-bars 18 inches beyond the front face of end bents and int. bents for squared and truncated end panels only.

(3) Extend S-bars 9 inches beyond edge of girder (Typ.).

(4) End panels shall be dimensioned 1/2" min. to 1 1/2" max. from the inside face of diaphragm.

(5) For truncated end panels, use a min. of #5-S bars at 6" crossings in openings, or min. 4x4-W7xW7.

Plans of Panels:
(6) For end panels only, P1 bars shall be 2'-0" in length and embedded 12". P1 bars will not be required for panels at squared integral end bents.

(7) #3-P2 bars near edge of panel at bottom (under strands).

(8) Use #3-P3 bars if panel is skewed 45° or greater.

(9) Any strand 2'-0" or shorter shall have a #4 reinforcing bar on each side of it, centered between strands. Strands 2'-0" or shorter may then be debonded at the fabricator's option.

(10) Optional 1/2" x 45° Chamfer one or both sides at bottom.

Section A-A:
(11) Slab thickness over prestressed panels varies due to girder camber. In order to maintain minimum slab thickness, it may be necessary to raise the grade uniformly throughout the structure. No payment will be made for additional labor or materials required for necessary grade adjustment.

(12) Contractor shall ensure proper consolidation under and between panels.

(13) At the contractor's option, the variation in slab thickness over prestressed panels may be eliminated or reduced by increasing and varying the girder top flange thickness. Dimensions shall be shown on the shop drawings.

General Notes:

Prestressed Panels:
Concrete for prestressed panels shall be Class A-1 with f'c = 6,000 psi, f'ci = 4,000 psi.

The top surface of all panels shall receive a scored finish with a depth of scoring of 1/8" perpendicular to the prestressing strands in the panels.

Prestressing tendons shall be high-tensile strength, uncoated, seven-wire, low-relaxation strands for prestressed concrete in accordance with AASHTO M 203 Grade 270, with nominal diameter of strand = 3/8" and nominal area = 0.085 sq.in. and minimum ultimate strength = 22.95 kips (270 ksi). Larger strands may be used with the same spacing and initial tension.

Initial prestressing force = 17.2 kips/strand.

The method and sequence of releasing the strands shall be shown on the shop drawings.

Suitable anchorage devices for lifting panels may be cast in panels, provided the devices are shown on the shop drawings and approved by the engineer. Panel lengths shall be determined by the contractor and shown on the shop drawings.

When squared end panels are used at skewed bents, the skewed portion shall be cast full depth. No separate payment will be made for additional concrete and reinforcing required.

Support from diaphragm forms is required under the optional skewed end until cast-in-place concrete has reached 3,000 psi compressive strength.

Prestressed panels shall be brought to saturated surface-dry (SSD) condition just prior to the deck pour. There shall be no free standing water on the panels or in the area to be cast.

The prestressed panel quantities are not included in the table of estimated quantities for the slab.

Reinforcing Steel:
All dimensions are out to out.

Hooks and bends shall be in accordance with the CRSI Manual of Standard Practice for Detailing Reinforced Concrete Structures, Stirrup and Tie Dimensions.

Minimum clearance to reinforcing steel shall be 1 1/2", unless otherwise shown.

If U1 bars interfere with placement of slab steel, U1 loops may be bent over, as necessary, to clear slab steel.

Deformed welded wire reinforcement (WWR) providing a minimum area of reinforcing perpendicular to strands of 0.22 sq in./ft, with spacing parallel to strands sufficient to ensure proper handling, may be used in lieu of the #3-P2 bars shown. Wire diameter shall not be larger than 0.375 inch. The above alternative reinforcement criteria may be used in lieu of the #3-P3 bars, when required, and placed over a width not less than 2 feet.

The following reinforcing steel shall be tied securely to the strands with the following maximum spacing in each direction:
#3-P2 bars at 16 inches.
WWR at 24 inches.

The #3-U1 bars shall be tied securely to #3-P2 bars, to WWR or to strands (when placed between P1 bars) at about 3-foot centers.

Minimum reinforcement steel length shall be 2'-0".

All reinforcement other than prestressing strands shall be epoxy coated.

Precast panels may be in contact with stirrup reinforcing in diaphragms.

S-bars are not listed in the bill of reinforcing.

Cost of S-bars will be considered completely covered by the contract unit price for the slab.

Joint Filler:
Joint filler shall be preformed fiber expansion joint material in accordance with Sec 1057 or expanded or extruded polystyrene bedding material in accordance with Sec 1073.

Use Slab Haunching Diagram on Sheet No. 21 for determining thickness of joint filler within the limits noted in the table of Joint Filler Dimensions.

Thicker material may be used on one or both sides of the girder to reduce cast-in-place concrete thickness to within tolerances.

The same thickness of preformed fiber expansion joint material shall be used under any one edge of any panel except at locations where top flange thickness may be stepped. The maximum change in thickness between adjacent panels shall be 1/2 inch. The polystyrene bedding material may be cut with a transition to match haunch height above top of flange.

Joint filler shall be glued to the girder. When thickness exceeds 1 1/2 inches, the joint filler shall be glued top and bottom. The glue used shall be the type recommended by the joint filler manufacturer.

Edges of panels shall be uniformly seated on the joint filler before slab reinforcement is placed.

STATE OF MISSOURI ALEX BENZ NUMBER PE-2018003121 PROFESSIONAL ENGINEER
Alex C. Benz
02/13/2025 11:53:44 AM
Alex Benz - Civil
MO PE-2018003121

DATE PREPARED	
2/12/2025	
ROUTE	STATE
I-70	MO
DISTRICT	SHEET NO.
BR	19
COUNTY	
BOONE	
JOB NO.	
JST0021	
CONTRACT ID.	
PROJECT NO.	
BRIDGE NO.	
A9545	

DATE	DESCRIPTION
12/12/24	REV. A - PRELIMINARY REVIEW
01/31/25	REV. B - FINAL REVIEW
02/14/25	REV. 0 - RELEASED FOR CONSTRUCTION

MISSOURI HIGHWAYS AND TRANSPORTATION COMMISSION
105 WEST CAPITOL
JEFFERSON CITY, MO 65102
1-888-ASK-MODOT (1-888-275-6636)

MoDOT IMPROVE I-70 DB PROJECT 1

EFK•Moen
Civil Engineering Design
13523 Barrett Parkway Dr Suite 250 St. Louis, MO 63021
Phone 314-394-3100
Fax 314-394-3199
Missouri Certificate of Authority: 001578

Detailed Jan. 2025
Checked Jan. 2025

Note: This drawing is not to scale. Follow dimensions.

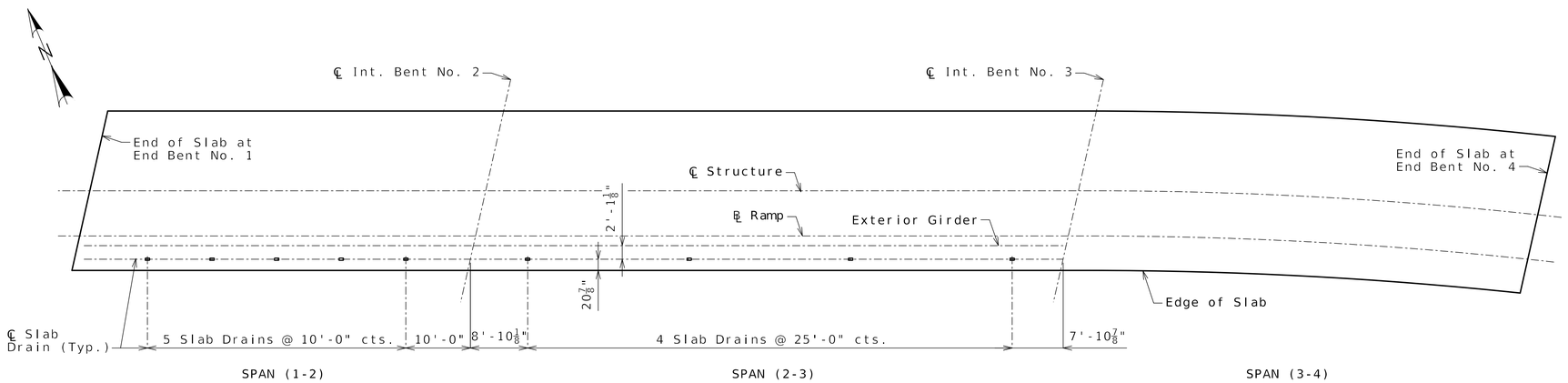

PLAN OF SLAB SHOWING SLAB DRAIN LOCATIONS

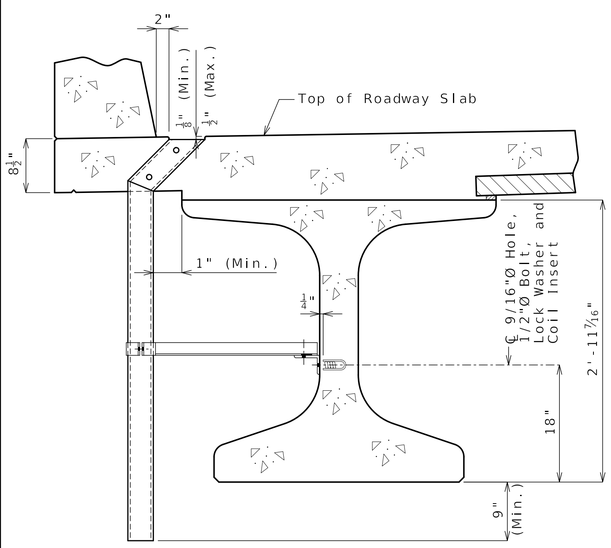

PART SECTION NEAR DRAIN

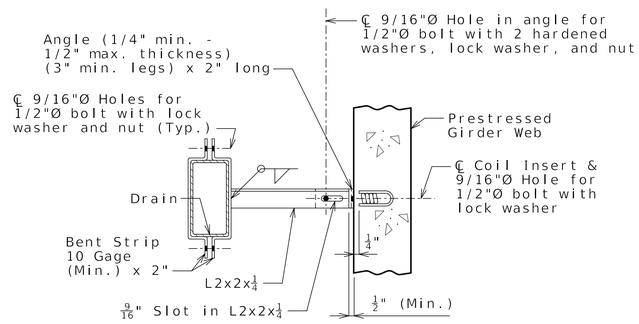

PART SECTION SHOWING BRACKET ASSEMBLY

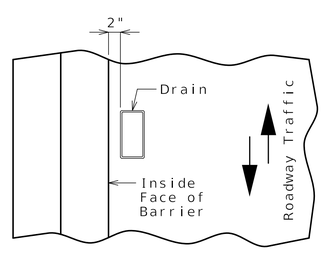

PART PLAN OF SLAB AT DRAIN

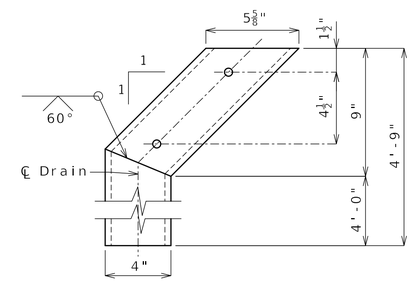

ELEVATION OF DRAIN

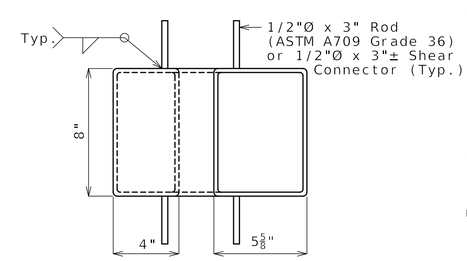

PLAN OF STEEL DRAIN OPTION

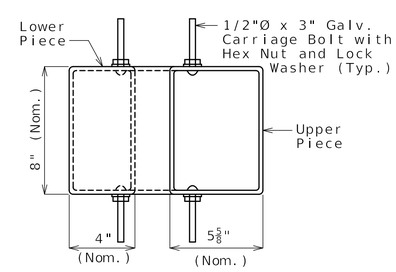

PLAN OF FRP DRAIN OPTION

General Notes:

Contractor shall have the option to construct either steel or FRP slab drains. All drains shall be of same type.

Slab drain bracket assembly shall be ASTM A709 Grade 36 steel.

Locate drains in slab by dimensions shown in Part Section Near Drain.

Reinforcing steel shall be shifted to clear drains.

The coil inserts and bracket assembly shall be galvanized in accordance with ASTM A123.

All bolts, hardened washers, lock washers and nuts shall be galvanized in accordance with AASHTO M 232 (ASTM A153), Class C.

All 1/2"Ø bolts shall be ASTM A307.

Shop drawings will not be required for the slab drains and the bracket assembly.

The coil insert required for the bracket assembly attachment shall be located on the prestressed girder shop drawings.

Coil inserts shall have a concrete pull-out strength (ultimate load) of at least 2,500 pounds in 5,000 psi concrete.

The bolt required to attach the slab drain bracket assembly to the prestressed girder web shall be supplied by the prestressed girder fabricator.

Notes for Steel Drain:

Slab drains may be fabricated of either 1/4" welded sheets of ASTM A709 Grade 36 steel or from 1/4" structural steel tubing ASTM A500 or A501.

Outside dimensions of drains are 8" x 4".

The drains shall be galvanized in accordance with ASTM A123.

Notes for FRP Drain:

Drains shall be machine filament-wound thermosetting resin tubing meeting the requirements of ASTM D2996 with the following exceptions:

Shape of drains shall be rectangular with outside nominal dimensions of 8" x 4".

Minimum reinforced wall thickness shall be 1/4 inch.

The resin used shall be ultraviolet (UV) resistant and/or have UV inhibitors mixed throughout. Drains may have an exterior coating for additional UV resistance.

The color of the slab drain shall be gray (Federal Standard 26373). The color shall be uniform throughout the resin and any coating used.

The combination of materials used in the manufacture of the drains shall be tested for UV resistance in accordance with ASTM D4329 Cycle A. The representative material shall withstand at least 500 hours of testing with only minor discoloration and without any physical deterioration. The contractor shall furnish the results of the required ultraviolet testing prior to acceptance of the slab drains.

At the contractor's option, drains may be field cut. The method of cutting FRP slab drain shall be as recommended by the manufacturer to ensure a smooth, chip free cut.

Both upper and lower drain pieces shall be rigidly connected to each other. Drain flow shall not be obstructed. Approval of the engineer is required.

SLAB DRAINS

Detailed Jan. 2025
Checked Jan. 2025

Note: This drawing is not to scale. Follow dimensions.

STATE OF MISSOURI
ALEX BENZ
NUMBER PE-2018003121
PROFESSIONAL ENGINEER

Alex C. Benz
02/13/2025 11:53:44 AM
Alex Benz - Civil
MO PE-2018003121

DATE PREPARED	
2/12/2025	
ROUTE	STATE
I-70	MO
DISTRICT	SHEET NO.
BR	20
COUNTY	
BOONE	
JOB NO.	
JST0021	
CONTRACT ID.	
PROJECT NO.	
BRIDGE NO.	
A9545	

DATE	DESCRIPTION
12/12/24	REV. A - PRELIMINARY REVIEW
01/31/25	REV. B - FINAL REVIEW
02/14/25	REV. 0 - RELEASED FOR CONSTRUCTION

MISSOURI HIGHWAYS AND TRANSPORTATION COMMISSION
105 WEST CAPITOL
JEFFERSON CITY, MO 65102
1-888-ASK-MODOT (1-888-275-6636)

MoDOT IMPROVE I-70 DB PROJECT 1

EFK•Moen
Civil Engineering Design
13523 Barrett Parkway Dr Suite 250 St. Louis, MO 63021
Phone 314-394-3100
Fax 314-394-3199
Missouri Certificate of Authority: 001578

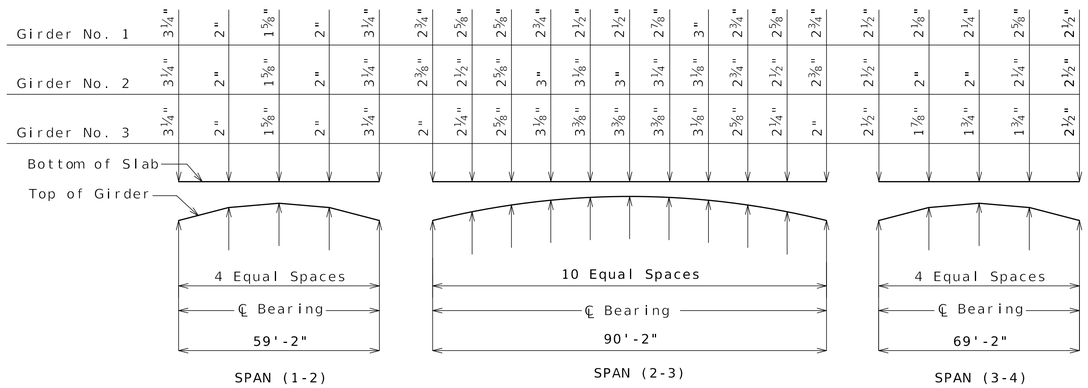

THEORETICAL SLAB HAUNCHING DIAGRAM (ESTIMATED AT 90 DAYS)

If girder camber is different from that shown in the camber diagram, in order to maintain minimum slab thickness, an adjustment of the slab haunches, an increase in slab thickness or a raise in grade uniformly throughout the structure shall be necessary. No payment will be made for additional labor or materials required for variation in haunching, slab thickness or grade adjustment.

Concrete in the slab haunches is included in the Estimated Quantities for Slab on Concrete I-Girder.

Theoretical Bottom of Slab Elevations at Centerline of Girder (Prior to forming for slab) (Estimated at 90 days)

Girder Number	Span (1-2) (59'-2" ℄ Brg. - ℄ Brg.)				
	℄ Brg.	0.25	0.50	0.75	℄ Brg.
1	688.46	688.49	688.53	688.56	688.61
2	688.29	688.32	688.35	688.39	688.43
3	688.13	688.15	688.18	688.21	688.25

Girder Number	Span (2-3) (90-2" ℄ Brg. - ℄ Brg.)										
	℄ Brg.	.10	.20	.30	.40	.50	.60	.70	.80	.90	℄ Brg.
1	688.62	688.75	688.89	689.02	689.14	689.29	689.44	689.58	689.71	689.84	689.97
2	688.44	688.57	688.71	688.84	688.96	689.08	689.20	689.31	689.40	689.50	689.59
3	688.26	688.39	688.52	688.64	688.76	688.87	688.96	689.03	689.10	689.16	689.23

Girder Number	Span (3-4) (69'-2" ℄ Brg. - ℄ Brg.)				
	℄ Brg.	0.25	0.50	0.75	℄ Brg.
1	690.02	690.45	690.90	691.36	691.76
2	689.64	690.02	690.42	690.83	691.22
3	689.28	689.60	689.94	690.29	690.68

Elevations are based on a constant slab thickness of 8 1/2" and include allowance for theoretical dead load deflections due to weight of slab (including precast panel) and barrier.

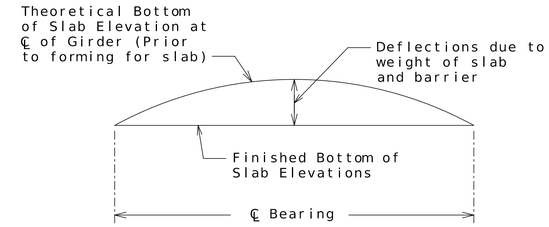

TYPICAL SLAB ELEVATIONS DIAGRAM

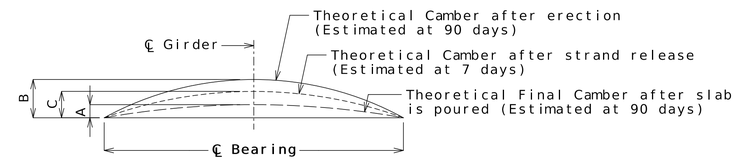

Girder	Span (1-2)			Span (2-3)			Span (3-4)		
	A	B	C	A	B	C	A	B	C
Exterior	1"	1½"	1¼"	⅞"	3½"	3¼"	⅞"	1¾"	1⅝"
Interior	1"			¾"			⅞"		

GIRDER CAMBER DIAGRAM

Conversion Factors for Girder Camber (Estimated at 90 days):

0.1 pt. = 0.314 x 0.5 pt.
0.2 pt. = 0.593 x 0.5 pt.
0.3 pt. = 0.813 x 0.5 pt.
0.4 pt. = 0.952 x 0.5 pt.

0.25 pt. = 0.7125 x 0.5 pt.

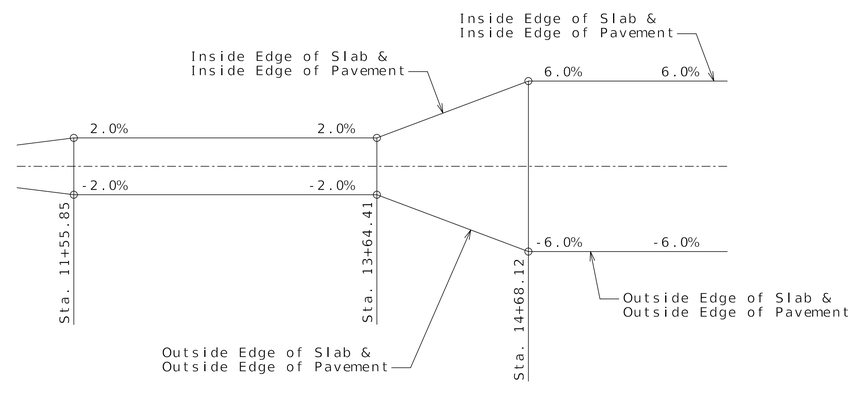

SUPERELEVATION TABLE

STATE OF MISSOURI
ALEX BENZ
NUMBER PE-2018003121
PROFESSIONAL ENGINEER

Alex C. Benz
02/13/2025 11:53:44 AM
Alex Benz - Civil
MO PE-2018003121

DATE PREPARED	
2/12/2025	
ROUTE: I-70	STATE: MO
DISTRICT: BR	SHEET NO.: 21
COUNTY: BOONE	
JOB NO.: JST0021	
CONTRACT ID.	
PROJECT NO.	
BRIDGE NO.: A9545	

DATE	DESCRIPTION
12/12/24	REV. A - PRELIMINARY REVIEW
01/31/25	REV. B - FINAL REVIEW
02/14/25	REV. 0 - RELEASED FOR CONSTRUCTION

MISSOURI HIGHWAYS AND TRANSPORTATION COMMISSION
105 WEST CAPITOL
JEFFERSON CITY, MO 65102
1-888-ASK-MODOT (1-888-275-6636)

MoDOT IMPROVE I-70 DB PROJECT 1

EFK•Moen
Civil Engineering Design
13523 Barrett Parkway Dr
Suite 250
St. Louis, MO 63021
Phone 314-394-3100
Fax 314-394-3199
Missouri Certificate of Authority: 001578

Detailed Jan. 2025
Checked Jan. 2025

Note: This drawing is not to scale. Follow dimensions.

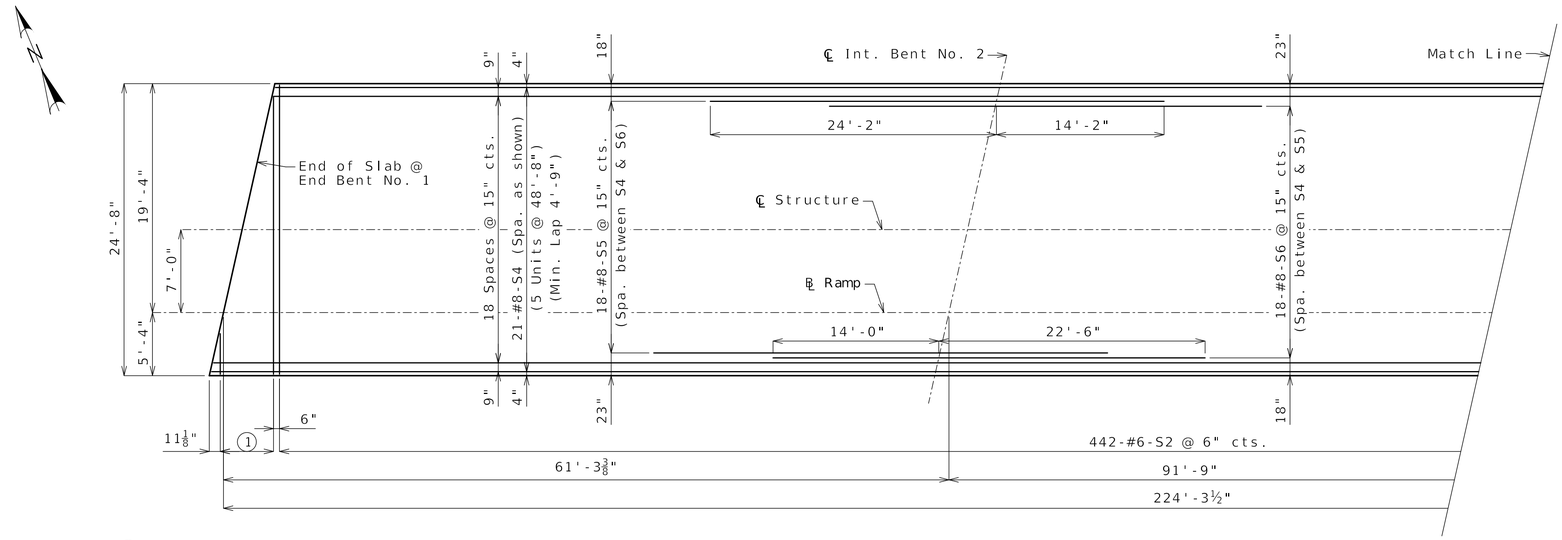

① 10-#6-S1 @ 6" cts.

② 5-#6-S3 @ 6" cts.

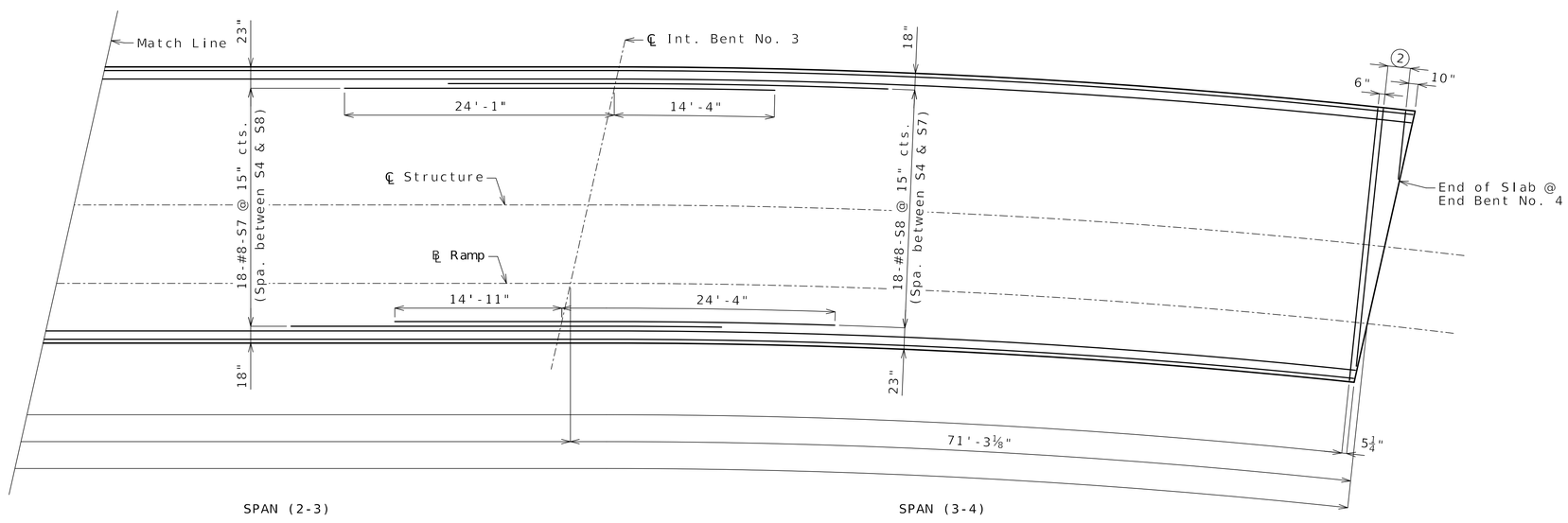

Notes:

Longitudinal slab dimensions are measured horizontally.

For Plan of Slab Showing Bottom Reinforcement, see Sheet No. 23.

For Section Thru Slab and Slab Pouring Sequence, see Sheet No. 24.

Fr Details and Reinforcement of Type D Barrier not shown, see Sheets No. 26 & 27.

For Theoretical Slab Haunching Diagram, see Sheet No. 21.

For Details of Precast Prestressed Panels, see Sheet No. 19.

For Theoretical Bottom of Slab Elevations, see Sheet No. 21.

For details and locations of Slab Drains, see Sheet No. 20.

PLAN OF SLAB SHOWING TOP REINFORCEMENT

Detailed Jan. 2025
Checked Jan. 2025

Note: This drawing is not to scale. Follow dimensions.

STATE OF MISSOURI
ALEX BENZ
NUMBER PE-2018003121
PROFESSIONAL ENGINEER

Alex C. Benz
02/13/2025 11:53:44 AM
Alex Benz - Civil
MO PE-2018003121

DATE PREPARED	
2/12/2025	
ROUTE	STATE
I-70	MO
DISTRICT	SHEET NO.
BR	22
COUNTY	
BOONE	
JOB NO.	
JST0021	
CONTRACT ID.	
PROJECT NO.	
BRIDGE NO.	
A9545	

DATE	DESCRIPTION
12/12/24	REV. A - PRELIMINARY REVIEW
01/31/25	REV. B - FINAL REVIEW
02/14/25	REV. 0 - RELEASED FOR CONSTRUCTION

MISSOURI HIGHWAYS AND TRANSPORTATION COMMISSION
105 WEST CAPITOL
JEFFERSON CITY, MO 65102
1-888-ASK-MODOT (1-888-275-6636)

MoDOT IMPROVE I-70 DB PROJECT 1

EFK•Moen
Civil Engineering Design
13523 Barrett Parkway Dr
Suite 250
St. Louis, MO 63021
Phone 314-394-3100
Fax 314-394-3199
Missouri Certificate of Authority: 001578

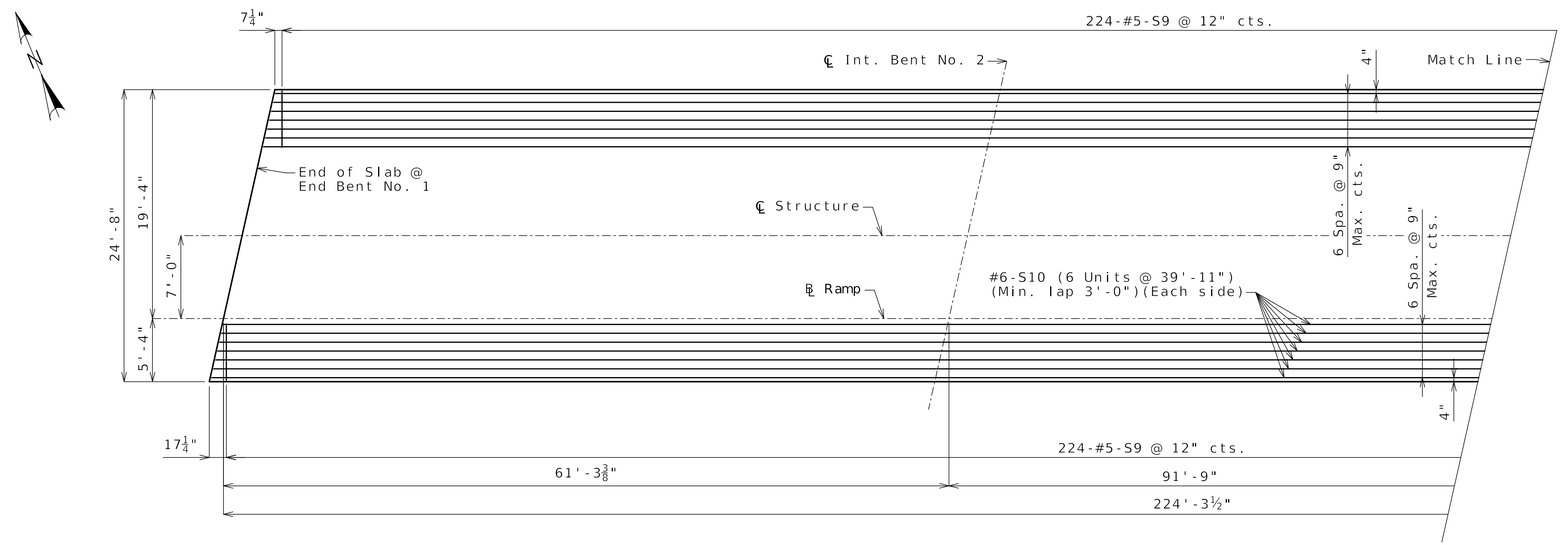

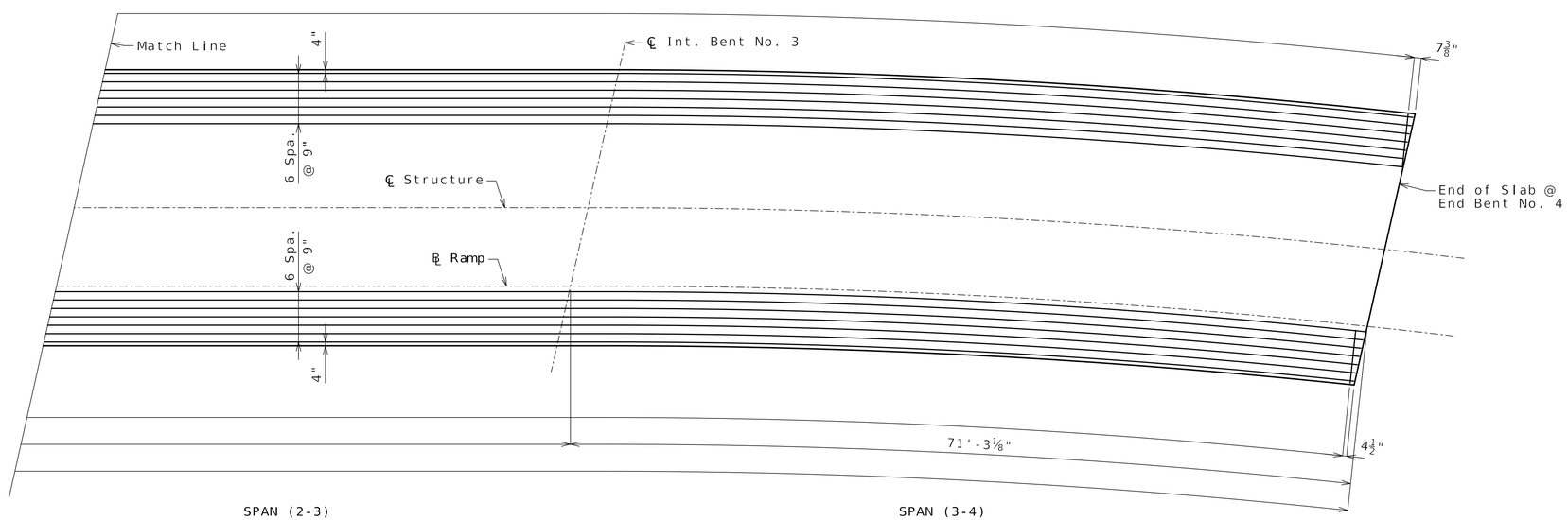

Notes:

Longitudinal slab dimensions are measured horizontally.

For Plan of Slab Showing Top Reinforcement, see Sheet No. 22.

For Section Thru Slab and Slab Pouring Sequence, see Sheet No. 24.

Fr Details and Reinforcement of Type D Barrier not shown, see Sheets No. 26 & 27.

For Theoretical Slab Haunching Diagram, see Sheet No. 21.

For Details of Precast Prestressed Panels, see Sheet No. 19.

For Theoretical Bottom of Slab Elevations, see Sheet No. 21.

For details and locations of Slab Drains, see Sheet No. 20.

PLAN OF SLAB SHOWING BOTTOM REINFORCEMENT

Detailed Jan. 2025
Checked Jan. 2025

Note: This drawing is not to scale. Follow dimensions.

STATE OF MISSOURI
ALEX BENZ
NUMBER PE-2018003121
PROFESSIONAL ENGINEER

Alex C. Benz
02/13/2025 11:53:45 AM
Alex Benz - Civil
MO PE-2018003121

DATE PREPARED	2/12/2025
ROUTE	I-70
STATE	MO
DISTRICT	BR
SHEET NO.	23
COUNTY	BOONE
JOB NO.	JST0021
CONTRACT ID.	
PROJECT NO.	
BRIDGE NO.	A9545

DESCRIPTION	DATE
REV. B - FINAL REVIEW	01/31/25
REV. 0 - RELEASED FOR CONSTRUCTION	02/14/25

MISSOURI HIGHWAYS AND TRANSPORTATION COMMISSION
105 WEST CAPITOL
JEFFERSON CITY, MO 65102
1-888-ASK-MODOT (1-888-275-6636)

MoDOT IMPROVE I-70 DB PROJECT 1

EFK•Moen
Civil Engineering Design
13523 Barrett Parkway Dr
Suite 250
St. Louis, MO 63021
Phone 314-394-3100
Fax 314-394-3199
Missouri Certificate of Authority: 001578

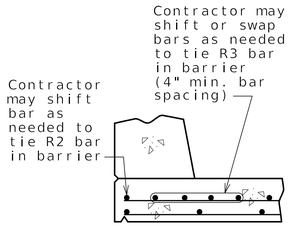

OPTIONAL SHIFTING TOP BARS AT BARRIER

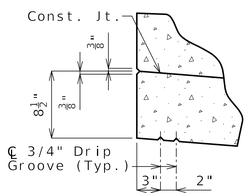

DETAIL A

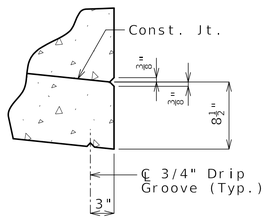

DETAIL B

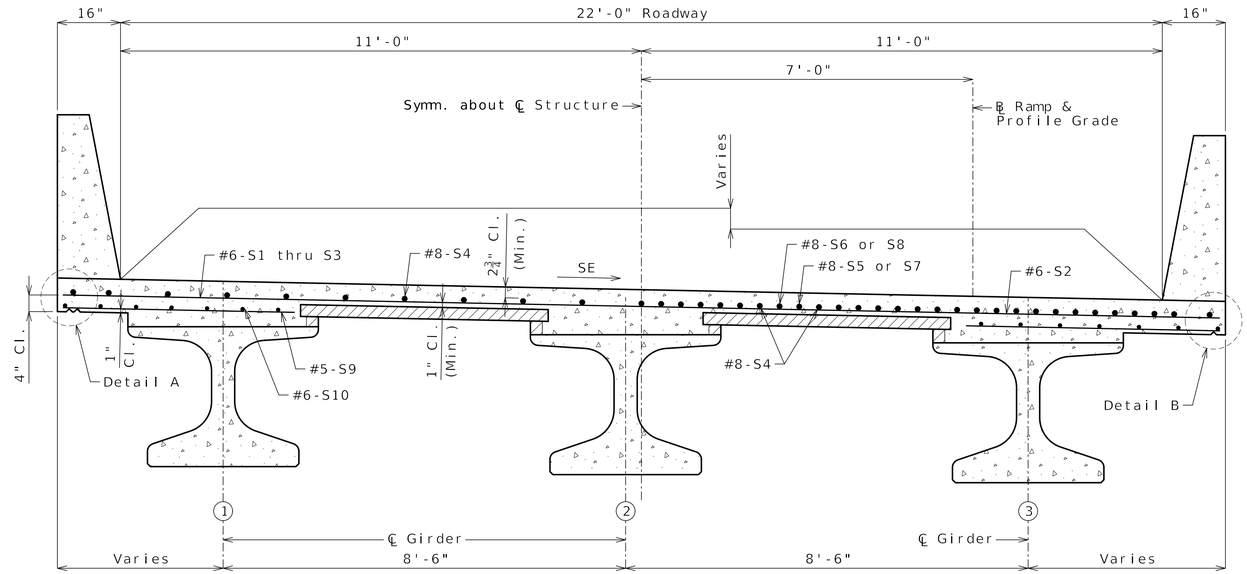

HALF SECTION NEAR MIDSPAN HALF SECTION NEAR INTERMEDIATE BENT

SECTION THRU SLAB

* Alternate bar shape available, see barrier sheet.

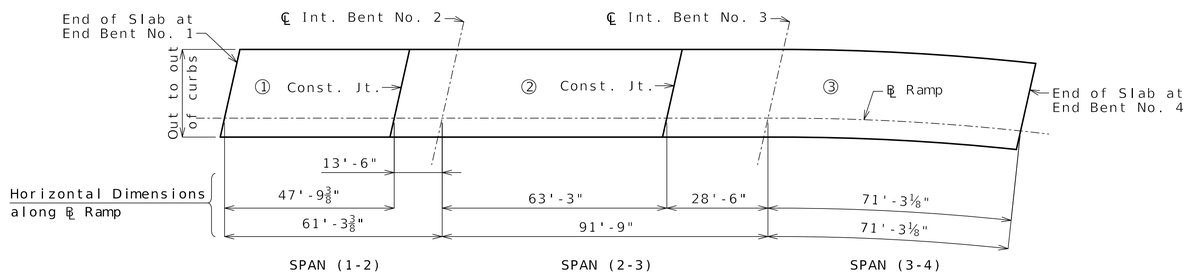

	Sequence of Pours			Min. Rate of Pour Cu. Yds./Hr.
	Direction			With Retarder
Basic Sequence	1 End to 2	2 1 to 3	3 2 to End	25
Alternate pours to the basic sequence are subject to the approval of the engineer in accordance with Sec 703.				
Alternate A Pours	1 + 2 End to 3		3 2 to End	25
Alternate B Pours	1 + 2 + 3 End to End			25

The contractor shall furnish an approved retarder to retard the set of the concrete to 2.5 hours, and shall pour and satisfactorily finish the slab pours at the rate given.

The concrete diaphragm at the intermediate bents and integral end bents shall be poured a minimum of 30 minutes and a maximum of 2 hours before the slab is poured.

SLAB POURING SEQUENCE

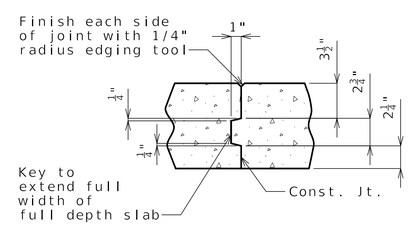

FULL DEPTH SLAB

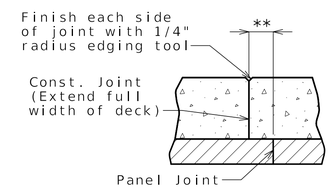

** Adjust the construction joint to a clearance of 6 inches minimum from the panel joint.

SLAB ON PANELS

SLAB CONSTRUCTION JOINT

Notes:

For details of precast prestressed panels, see Sheet No. 19.

For reinforcement of barrier not shown, see Sheets No. 26 & 27.

For Theoretical Bottom of Slab Elevations, Girder Camber Diagram and Theoretical Slab Haunching Diagram, see Sheet No. 21.

For Plan of Slab Showing Reinforcement, see Sheets No. 22 & 23.

SLAB DETAILS

Detailed Jan. 2025
Checked Jan. 2025

Note: This drawing is not to scale. Follow dimensions.

STATE OF MISSOURI ALEX BENZ NUMBER PE-2018003121 PROFESSIONAL ENGINEER

Alex C. Benz
02/13/2025 11:53:45 AM
Alex Benz - Civil
MO PE-2018003121

DATE PREPARED	
2/12/2025	
ROUTE: I-70	STATE: MO
DISTRICT: BR	SHEET NO.: 24
COUNTY: BOONE	
JOB NO.: JST0021	
CONTRACT ID.	
PROJECT NO.	
BRIDGE NO.: A9545	

DATE	DESCRIPTION
12/12/24	REV. A - PRELIMINARY REVIEW
01/31/25	REV. B - FINAL REVIEW
02/14/25	REV. 0 - RELEASED FOR CONSTRUCTION

MISSOURI HIGHWAYS AND TRANSPORTATION COMMISSION
105 WEST CAPITOL
JEFFERSON CITY, MO 65102
1-888-ASK-MODOT (1-888-275-6636)

MoDOT IMPROVE I-70 DB PROJECT 1

EFK•Moen
Civil Engineering Design
13523 Barrett Parkway Dr
Suite 250
St. Louis, MO 63021
Phone 314-394-3100
Fax 314-394-3199
Missouri Certificate of Authority: 001578

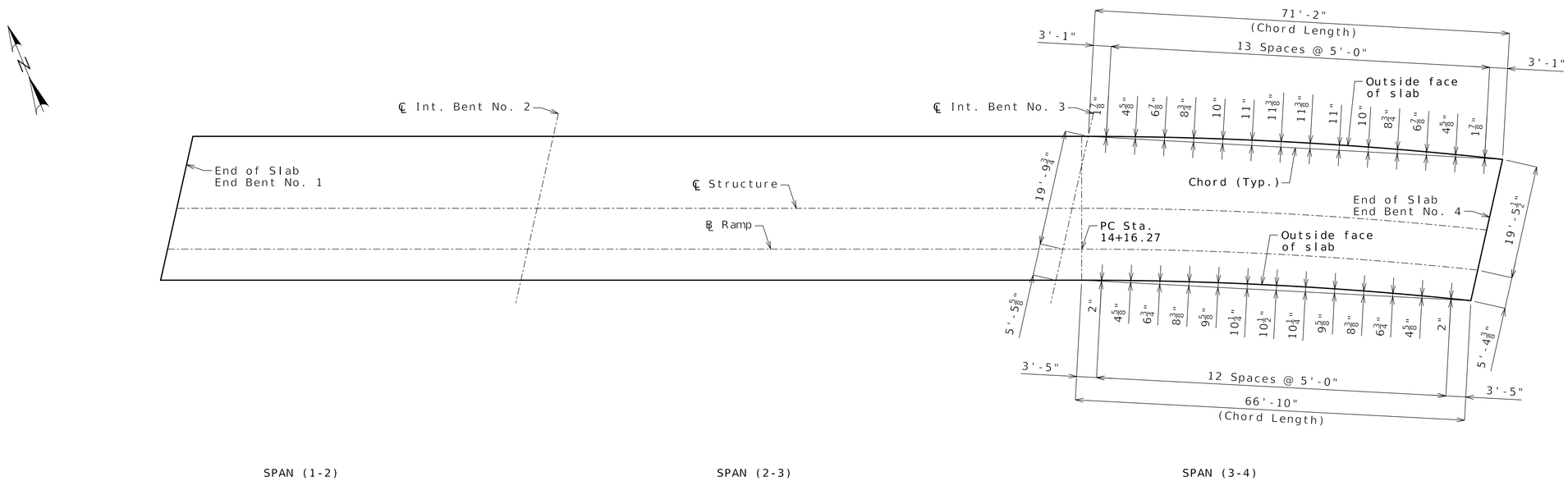

PLAN

Notes:

All dimensions are horizontal.

All bents are parallel.

SLAB CURVE ORDINATES

Detailed Jan. 2025
Checked Jan. 2025

Note: This drawing is not to scale. Follow dimensions.

STATE OF MISSOURI
ALEX BENZ
NUMBER PE-2018003121
PROFESSIONAL ENGINEER

Alex C. Benz

02/13/2025 11:53:45 AM
Alex Benz - Civil
MO PE-2018003121

DATE PREPARED	2/12/2025
ROUTE	I-70
STATE	MO
DISTRICT	BR
SHEET NO.	25
COUNTY	BOONE
JOB NO.	JST0021
CONTRACT ID.	
PROJECT NO.	
BRIDGE NO.	A9545

DATE	DESCRIPTION
12/12/24	REV. A - PRELIMINARY REVIEW
01/31/25	REV. B - FINAL REVIEW
02/14/25	REV. 0 - RELEASED FOR CONSTRUCTION

MISSOURI HIGHWAYS AND TRANSPORTATION COMMISSION

105 WEST CAPITOL
JEFFERSON CITY, MO 65102
1-888-ASK-MODOT (1-888-275-6636)

MoDOT IMPROVE I-70 DB PROJECT 1

EFK•Moen
Civil Engineering Design
13523 Barrett Parkway Dr
Suite 250
St. Louis, MO 63021
Phone 314-394-3100
Fax 314-394-3199
Missouri Certificate of Authority: 001578

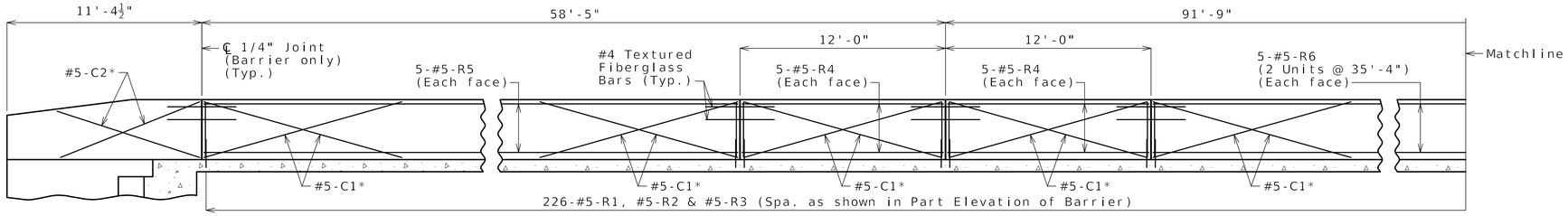

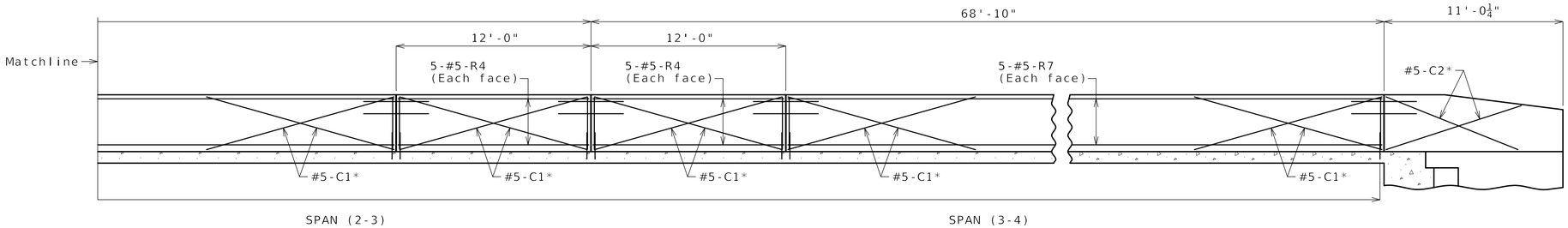

ELEVATION OF BARRIER

Longitudinal dimensions are horizontal arc dimensions along outside face of barrier.

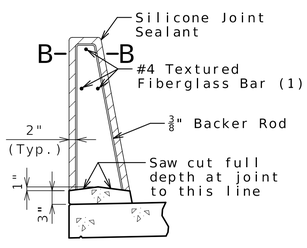

SECTION THRU SAW CUT JOINT

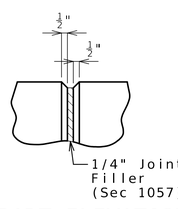

PART ELEVATION AT FORMED JOINT

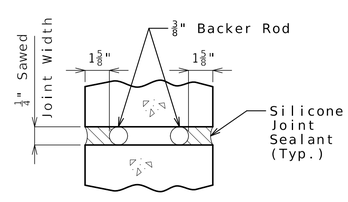

SECTION B-B

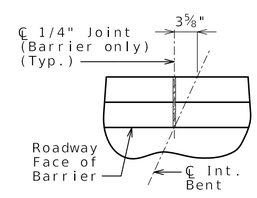

PART PLAN SHOWING JOINT LOCATION

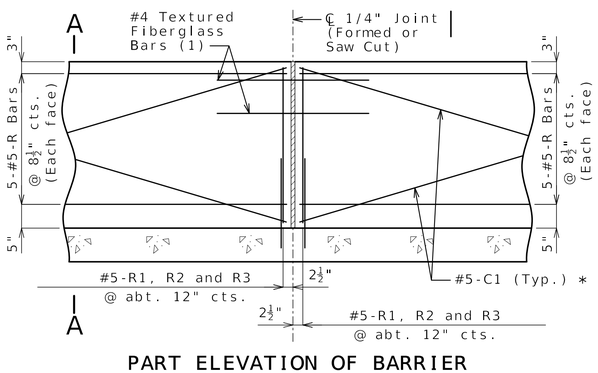

PART ELEVATION OF BARRIER

(1) Four feet long, centered on joint, slip-formed option only

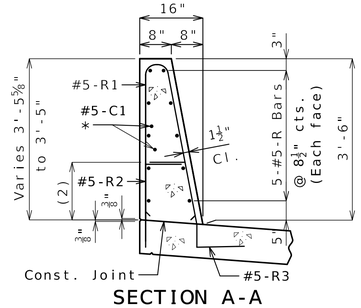

SECTION A-A

Use a minimum lap of 3'-1" for #5 horizontal barrier bars.

The cross-sectional area above the slab varies from 3.50 square feet to 3.47 square feet.

(2) Varies 14 3/8" to 13 3/4" to top of bar

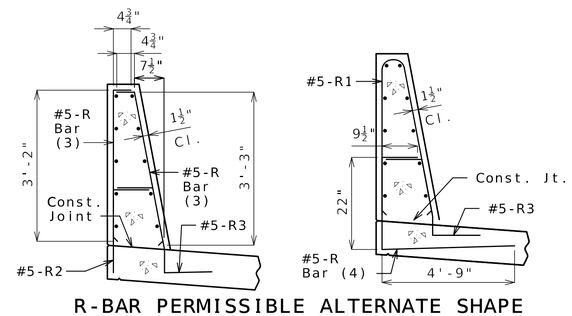

R-BAR PERMISSIBLE ALTERNATE SHAPE

(3) The R1 bar may be separated into two bars as shown, at the contractor's option, only when slip forming is not used. (All dimensions are out to out.)

(4) The R2 bar and #5 bottom transverse slab bar in cantilever (prestressed panels only) combination may be furnished as one bar as shown, at the contractor's option.

General Notes:

* Slip-formed option only.

Conventional forming or slip forming may be used. Saw cut joints may be used with conventional forming.

Top of barrier shall be built parallel to grade and barrier joints (except at end bents) normal to grade.

All exposed edges of barrier shall have either a 1/2-inch radius or a 3/8-inch bevel, unless otherwise noted.

Payment for all concrete and reinforcement, complete in place, will be considered completely covered by the contract unit price for Type D Barrier per linear foot.

Concrete in barrier shall be Class B-1.

Measurement of barrier is to the nearest linear foot for each structure, measured along the outside top of slab from end of wing to end of wing.

Concrete traffic barrier delineators shall be placed on top of the barrier as shown on Missouri Standard Plan 617.10 and in accordance with Sec 617. Delineators on bridges with two-lane, two-way traffic shall have retroreflective sheeting on both sides. Concrete traffic barrier delineators will be considered completely covered by the contract unit price for Type D Barrier.

Joint sealant and backer rods shall be in accordance with Sec 717 for silicone joint sealant for saw cut and formed joints.

For slip-formed option, both sides of barrier shall have a vertically broomed finish and the top shall have a transversely broomed finish.

LEFT TYPE D BARRIER

Detailed Jan. 2025
Checked Jan. 2025

Note: This drawing is not to scale. Follow dimensions.

STATE OF MISSOURI ALEX BENZ NUMBER PE-2018003121 PROFESSIONAL ENGINEER

Alex C. Benz
02/13/2025 11:53:45 AM
Alex Benz - Civil
MO PE-2018003121

DATE PREPARED	
2/12/2025	
ROUTE: I-70	STATE: MO
DISTRICT: BR	SHEET NO.: 26
COUNTY: BOONE	
JOB NO.: JST0021	
CONTRACT ID.	
PROJECT NO.	
BRIDGE NO.: A9545	

DATE	DESCRIPTION
12/12/24	REV. A - PRELIMINARY REVIEW
01/31/25	REV. B - FINAL REVIEW
02/14/25	REV. 0 - RELEASED FOR CONSTRUCTION

MISSOURI HIGHWAYS AND TRANSPORTATION COMMISSION
105 WEST CAPITOL
JEFFERSON CITY, MO 65102
1-888-ASK-MODOT (1-888-275-6636)

MoDOT IMPROVE I-70 DB PROJECT 1

EFK•Moen Civil Engineering Design
13523 Barrett Parkway Dr Suite 250 St. Louis, MO 63021
Phone 314-394-3100 Fax 314-394-3199
Missouri Certificate of Authority: 001578

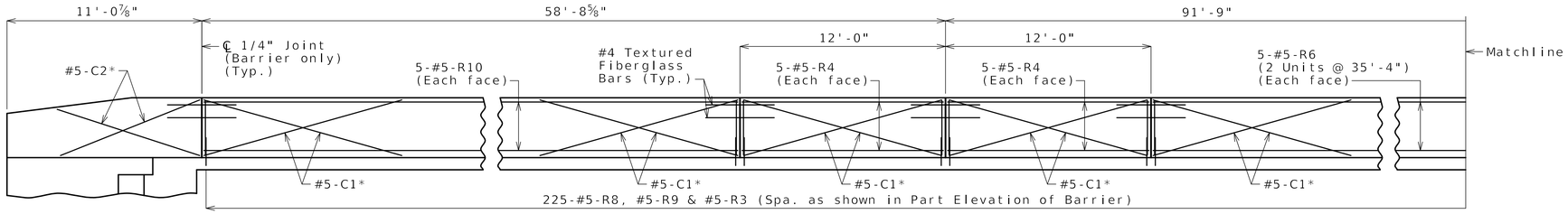

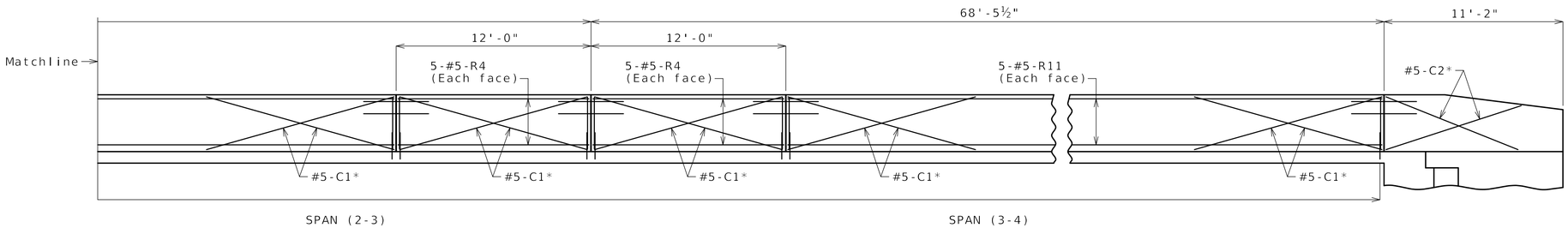

ELEVATION OF BARRIER

Longitudinal dimensions are horizontal arc dimensions along outside face of barrier.

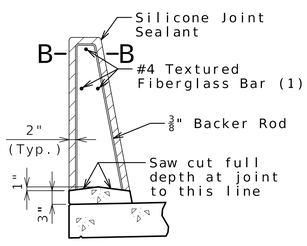

SECTION THRU SAW CUT JOINT

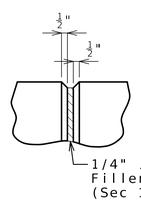

PART ELEVATION AT FORMED JOINT

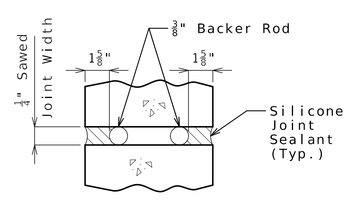

SECTION B-B

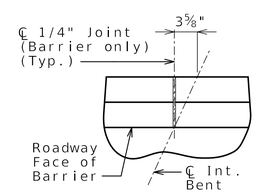

PART PLAN SHOWING JOINT LOCATION

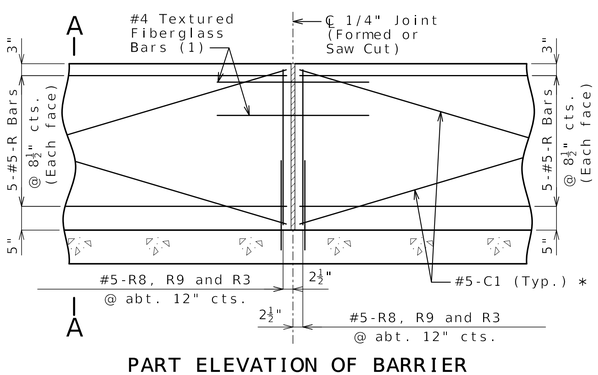

PART ELEVATION OF BARRIER

(1) Four feet long, centered on joint, slip-formed option only

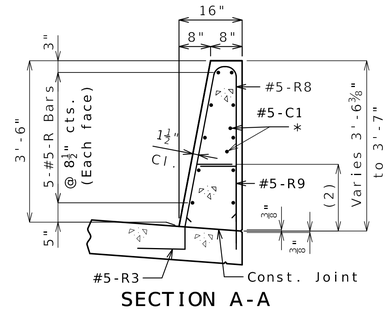

SECTION A-A

Use a minimum lap of 3'-1" for #5 horizontal barrier bars.

The cross-sectional area above the slab varies from 3.55 square feet to 3.57 square feet.

(2) Varies 15" to 15 5/8" to top of bar

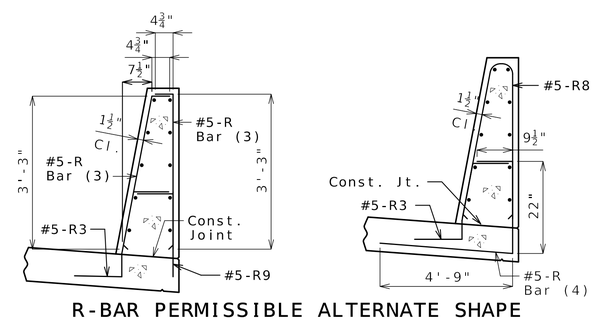

R-BAR PERMISSIBLE ALTERNATE SHAPE

(3) The R1 bar may be separated into two bars as shown, at the contractor's option, only when slip forming is not used. (All dimensions are out to out.)

(4) The R8 bar and #5 bottom transverse slab bar in cantilever (prestressed panels only) combination may be furnished as one bar as shown, at the contractor's option.

General Notes:

* Slip-formed option only.

Conventional forming or slip forming may be used. Saw cut joints may be used with conventional forming.

Top of barrier shall be built parallel to grade and barrier joints (except at end bents) normal to grade.

All exposed edges of barrier shall have either a 1/2-inch radius or a 3/8-inch bevel, unless otherwise noted.

Payment for all concrete and reinforcement, complete in place, will be considered completely covered by the contract unit price for Type D Barrier per linear foot.

Concrete in barrier shall be Class B-1.

Measurement of barrier is to the nearest linear foot for each structure, measured along the outside top of slab from end of wing to end of wing.

Concrete traffic barrier delineators shall be placed on top of the barrier as shown on Missouri Standard Plan 617.10 and in accordance with Sec 617. Delineators on bridges with two-lane, two-way traffic shall have retroreflective sheeting on both sides. Concrete traffic barrier delineators will be considered completely covered by the contract unit price for Type D Barrier.

Joint sealant and backer rods shall be in accordance with Sec 717 for silicone joint sealant for saw cut and formed joints.

For slip-formed option, both sides of barrier shall have a vertically broomed finish and the top shall have a transversely broomed finish.

RIGHT TYPE D BARRIER

Detailed Jan. 2025
Checked Jan. 2025

Note: This drawing is not to scale. Follow dimensions.

STATE OF MISSOURI
ALEX BENZ
NUMBER PE-2018003121
PROFESSIONAL ENGINEER

Alex C. Benz
02/13/2025 11:53:45 AM
Alex Benz - Civil
MO PE-2018003121

DATE PREPARED	2/12/2025
ROUTE	I-70
STATE	MO
DISTRICT	BR
SHEET NO.	27
COUNTY	BOONE
JOB NO.	JST0021
CONTRACT ID.	
PROJECT NO.	
BRIDGE NO.	A9545

DATE	DESCRIPTION
01/31/25	REV. B - FINAL REVIEW
02/14/25	REV. 0 - RELEASED FOR CONSTRUCTION

MISSOURI HIGHWAYS AND TRANSPORTATION COMMISSION
105 WEST CAPITOL
JEFFERSON CITY, MO 65102
1-888-ASK-MODOT (1-888-275-6636)

MoDOT IMPROVE I-70 DB PROJECT 1

EFK•Moen
Civil Engineering Design
13523 Barrett Parkway Dr Suite 250 St. Louis, MO 63021
Phone 314-394-3100
Fax 314-394-3199
Missouri Certificate of Authority: 001578

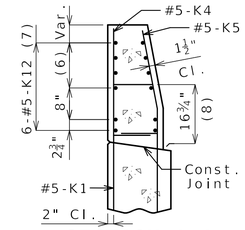

SECTION A-A

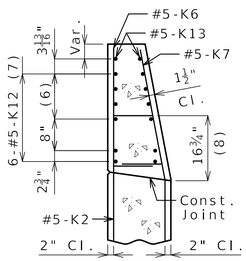

SECTION B-B

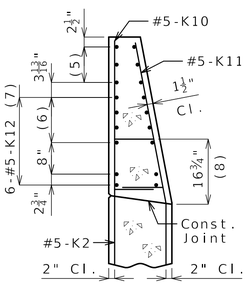

SECTION C-C

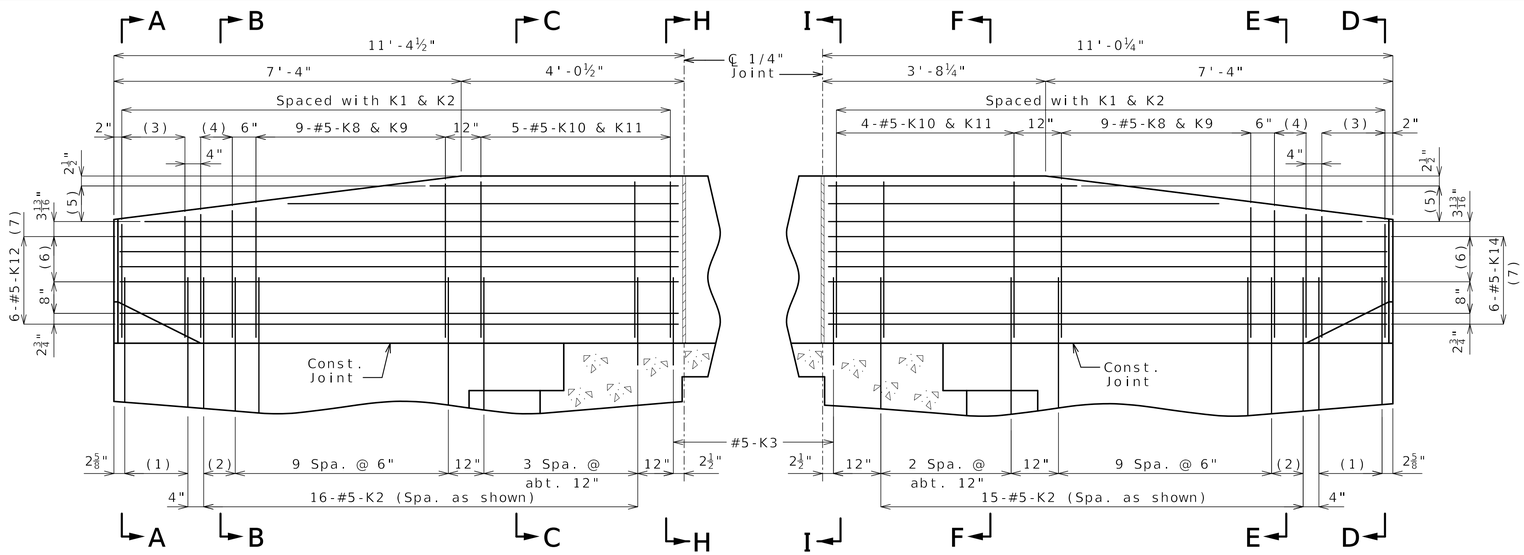

PART ELEVATION

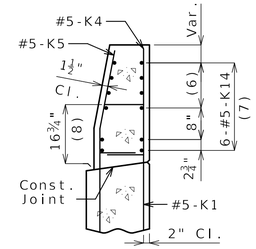

SECTION D-D

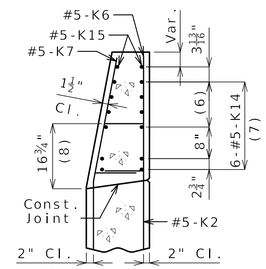

SECTION E-E

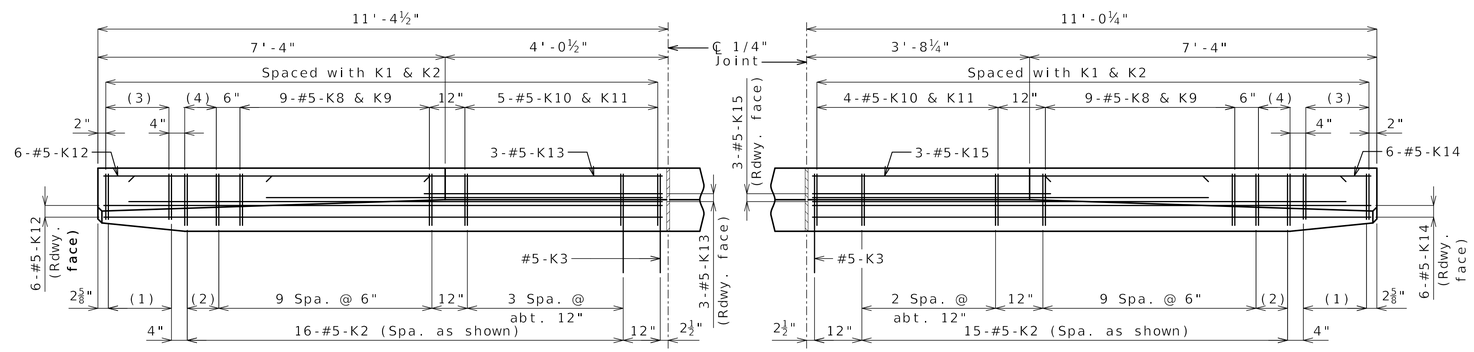

PART PLAN

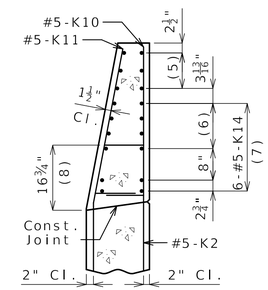

SECTION F-F

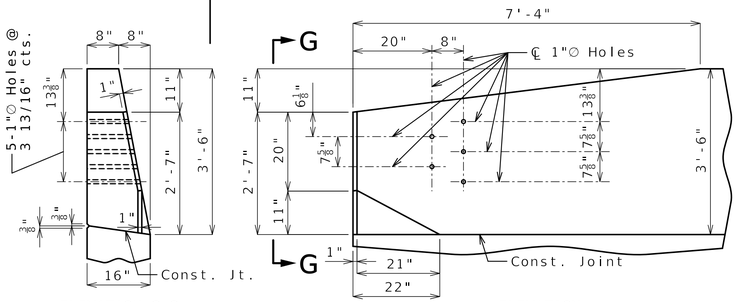

ELEVATION G-G

ELEVATION

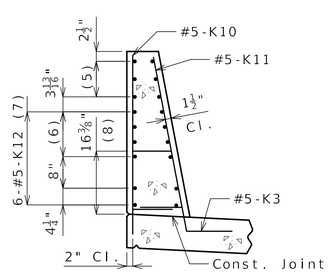

SECTION H-H

(1) 5-#5-K1 @ 4" cts.

(2) 2 spaces @ 4"

(3) 5-#5-K4 & K5

(4) 3-#5-K6 & K7

(5) 3-#5-K13 or K15 @ 4½" cts., each face

(6) 3 spaces @ 3 13/16"

(7) Spaced as shown, each face

(8) To top of bar

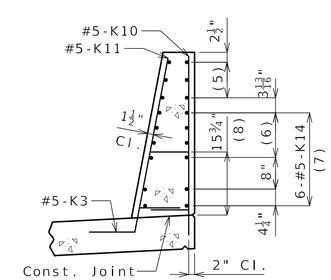

SECTION I-I

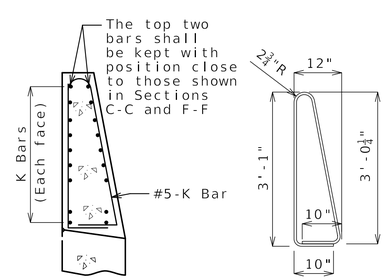

K10-K11 BAR PERMISSIBLE ALTERNATE SHAPE

(Other K bars not shown for clarity)

The K10-K11 bar combination may be furnished as one bar as shown, at the contractor's option.

All dimensions are out to out.

* Transition to zero at Type A curb for gutter lines to match.

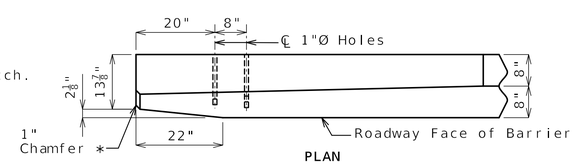

PLAN

DETAILS OF GUARD RAIL ATTACHMENT

General Notes:

Concrete traffic barrier delineators shall be placed on top of the barrier as shown on Missouri Standard Plan 617.10 and in accordance with Sec 617. Delineators on bridges with two-lane, two-way traffic shall have retroreflective sheeting on both sides. Concrete traffic barrier delineators will be considered completely covered by the contract unit price for Type D Barrier.

Reinforcing Steel:
Minimum clearance to reinforcing steel shall be 1 1/2" except as shown for bars embedded into end bent.

LEFT TYPE D BARRIER AT END BENTS

Detailed Jan. 2025
Checked Jan. 2025

Note: This drawing is not to scale. Follow dimensions.

STATE OF MISSOURI ALEX BENZ NUMBER PE-2018003121 PROFESSIONAL ENGINEER
Alex C. Benz
02/13/2025 11:53:45 AM
Alex Benz - Civil
MO PE-2018003121

DATE PREPARED 2/12/2025
ROUTE I-70 | STATE MO
DISTRICT BR | SHEET NO. 28
COUNTY BOONE
JOB NO. JST0021
CONTRACT ID.
PROJECT NO.
BRIDGE NO. A9545

DATE	DESCRIPTION
12/12/24	REV. A - PRELIMINARY REVIEW
01/31/25	REV. B - FINAL REVIEW
02/14/25	REV. 0 - RELEASED FOR CONSTRUCTION

MISSOURI HIGHWAYS AND TRANSPORTATION COMMISSION
105 WEST CAPITOL
JEFFERSON CITY, MO 65102
1-888-ASK-MODOT (1-888-275-6636)

MoDOT IMPROVE I-70 DB PROJECT 1

EFK•Moen
Civil Engineering Design
13523 Barrett Parkway Dr Suite 250 St. Louis, MO 63021
Phone 314-394-3100 Fax 314-394-3199
Missouri Certificate of Authority: 001578

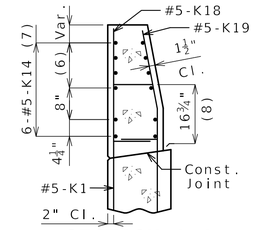

SECTION A-A

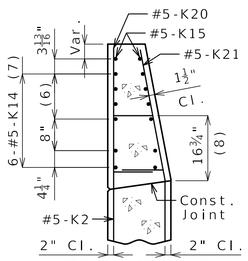

SECTION B-B

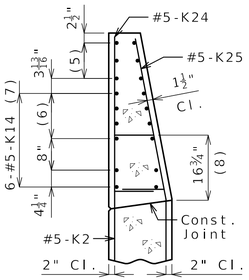

SECTION C-C

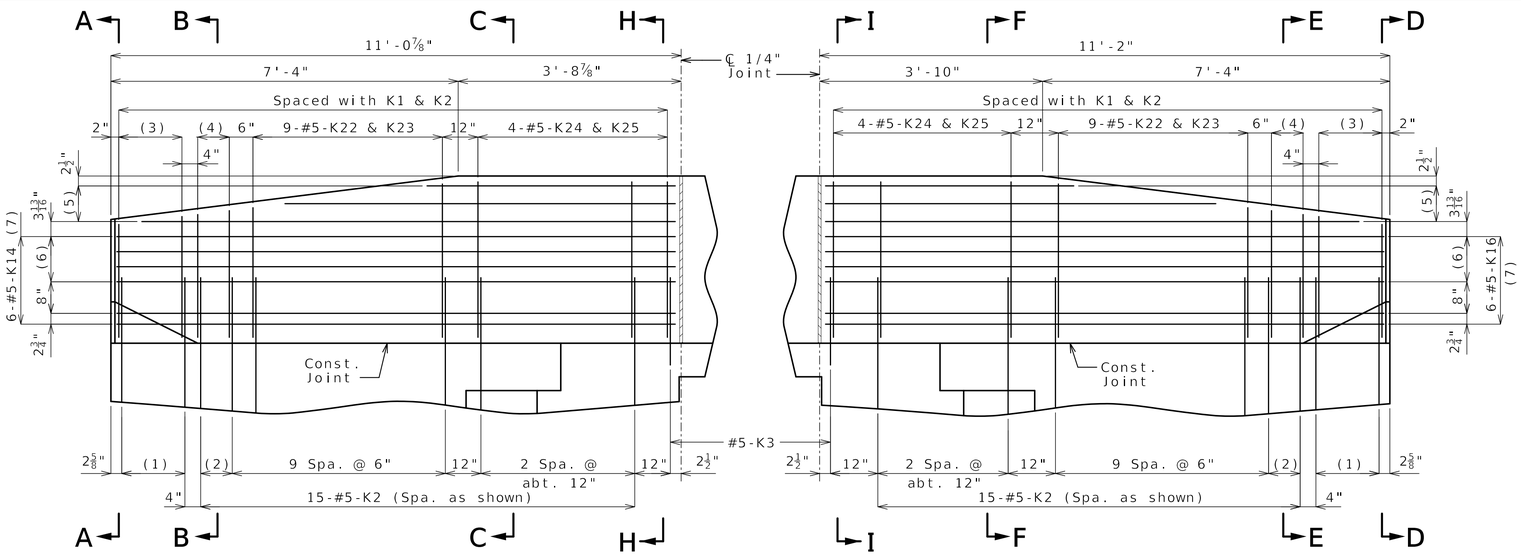

PART ELEVATION

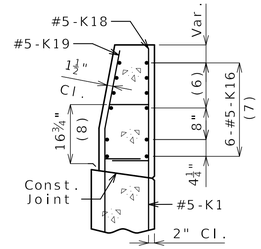

SECTION D-D

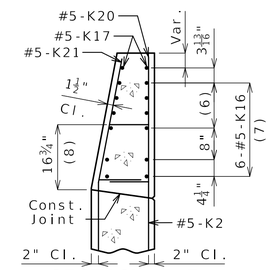

SECTION E-E

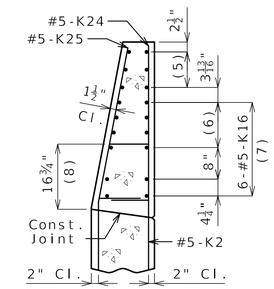

SECTION F-F

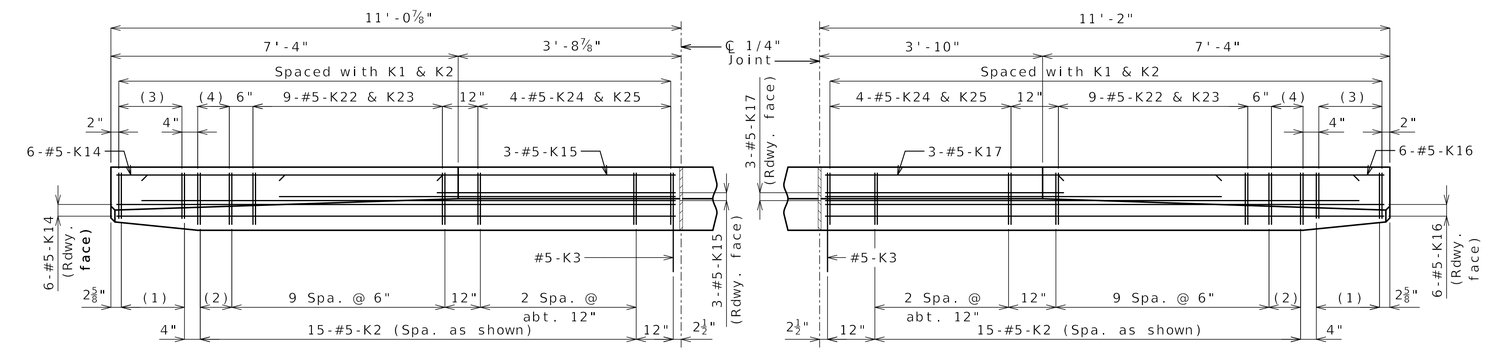

PART PLAN

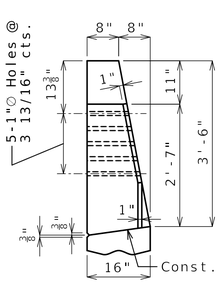

ELEVATION G-G

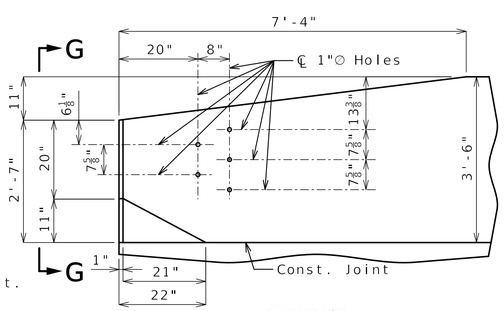

ELEVATION

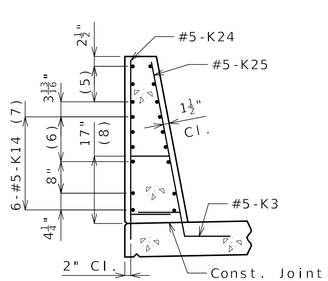

SECTION H-H

(1) 5-#5-K1 @ 4" cts.

(2) 2 spaces @ 4"

(3) 5-#5-K18 & K19

(4) 3-#5-K20 & K21

(5) 3-#5-K15 or K17 @ 4½" cts., each face

(6) 3 spaces @ 3 13/16"

(7) Spaced as shown, each face

(8) To top of bar

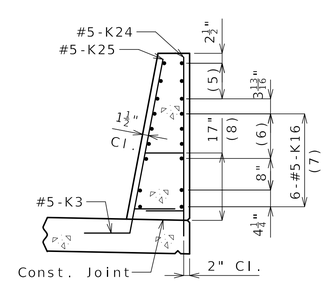

SECTION I-I

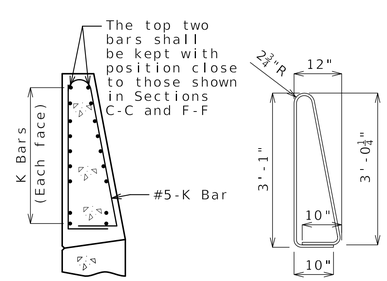

K24-K25 BAR PERMISSIBLE ALTERNATE SHAPE

(Other K bars not shown for clarity)

The K24-K25 bar combination may be furnished as one bar as shown, at the contractor's option.

All dimensions are out to out.

* Transition to zero at Type A curb for gutter lines to match.

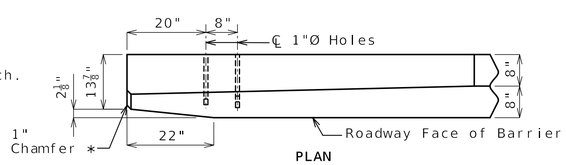

PLAN

DETAILS OF GUARD RAIL ATTACHMENT

General Notes:

Concrete traffic barrier delineators shall be placed on top of the barrier as shown on Missouri Standard Plan 617.10 and in accordance with Sec 617. Delineators on bridges with two-lane, two-way traffic shall have retroreflective sheeting on both sides. Concrete traffic barrier delineators will be considered completely covered by the contract unit price for Type D Barrier.

Reinforcing Steel:
Minimum clearance to reinforcing steel shall be 1 1/2" except as shown for bars embedded into end bent.

RIGHT TYPE D BARRIER AT END BENTS

Detailed Jan. 2025
Checked Jan. 2025

Note: This drawing is not to scale. Follow dimensions.

STATE OF MISSOURI ALEX BENZ NUMBER PE-2018003121 PROFESSIONAL ENGINEER

Alex C. Benz
02/13/2025 11:53:45 AM
Alex Benz - Civil
MO PE-2018003121

DATE PREPARED	
2/12/2025	
ROUTE	STATE
I-70	MO
DISTRICT	SHEET NO.
BR	29
COUNTY	
BOONE	
JOB NO.	
JST0021	
CONTRACT ID.	
PROJECT NO.	
BRIDGE NO.	
A9545	

DATE	REV.	DESCRIPTION
01/31/25	REV. B	- FINAL REVIEW
02/14/25	REV. 0	- RELEASED FOR CONSTRUCTION

MISSOURI HIGHWAYS AND TRANSPORTATION COMMISSION
105 WEST CAPITOL
JEFFERSON CITY, MO 65102
1-888-ASK-MODOT (1-888-275-6636)

MoDOT IMPROVE I-70 DB PROJECT 1

EFK•Moen
Civil Engineering Design
13523 Barrett Parkway Dr Suite 250 St. Louis, MO 63021
Phone 314-394-3100
Fax 314-394-3199
Missouri Certificate of Authority: 001578

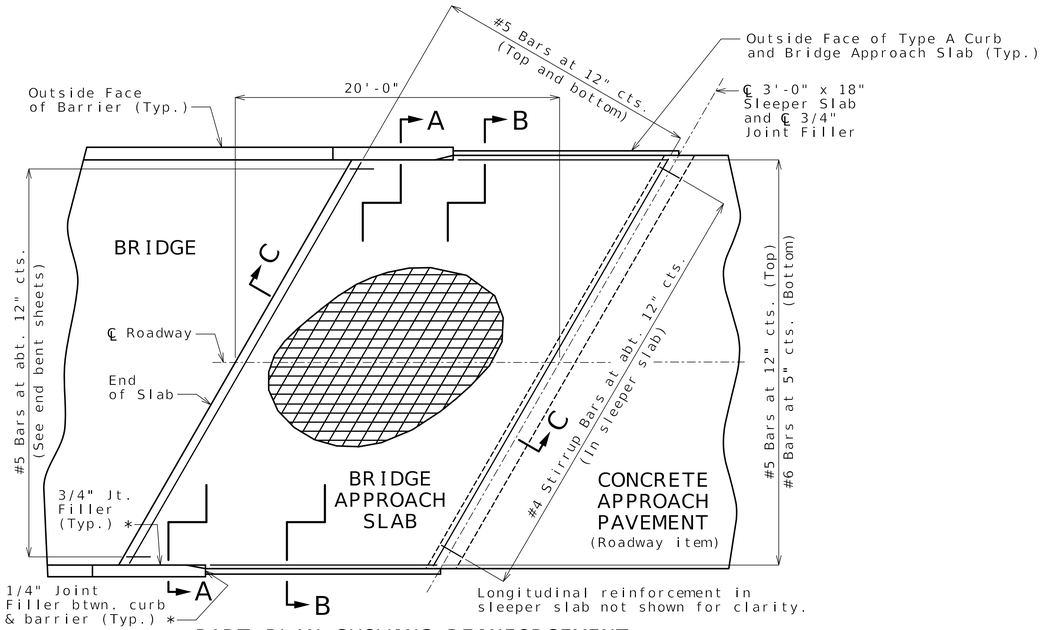

PART PLAN SHOWING REINFORCEMENT

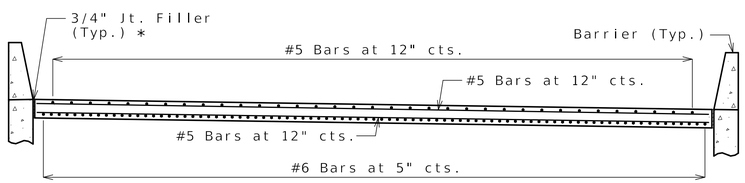

SECTION A-A

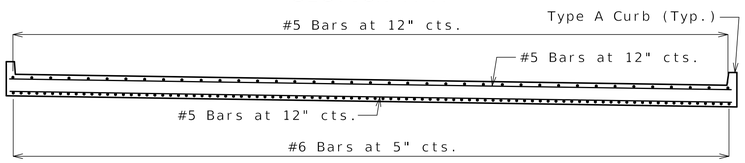

SECTION B-B

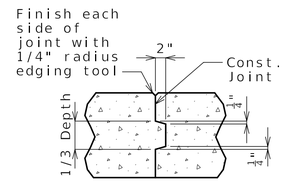

CONSTRUCTION JOINT DETAIL

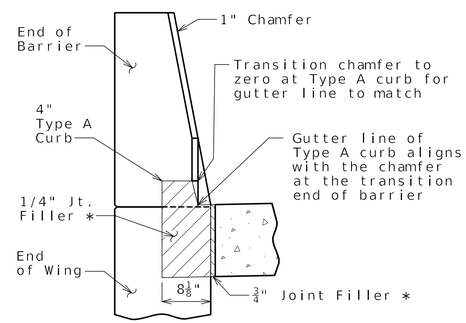

SECTION BETWEEN CURB AND BARRIER

General Notes:

All concrete for the bridge approach slab and sleeper slab shall be in accordance with Sec 503 (f'c = 4,000 psi).

The reinforcing steel in the bridge approach slab and the sleeper slab shall be epoxy coated Grade 60 with fy = 60,000 psi.

Drain pipe may be either 6" diameter corrugated metallic-coated pipe underdrain, 4" diameter corrugated polyvinyl chloride (PVC) drain pipe, or 4" diameter corrugated polyethylene (PE) drain pipe.

Minimum clearance to reinforcing steel shall be 1 1/2", unless otherwise shown.

The reinforcing steel in the bridge approach slab and the sleeper slab shall be continuous. The transverse reinforcing steel may be made continuous by providing a minimum lap splice of 29 inches for #5 bars and 44 inches for #6 bars, or by mechanical bar splice.

Mechanical bar splices shall be in accordance with Sec 710.

All joint filler shall be in accordance with Sec 1057 for preformed fiber expansion joint filler except as noted.

The contractor shall pour and satisfactorily finish the bridge slab before placing the bridge approach slab.

Longitudinal construction joints in approach slab and sleeper slab shall be aligned with longitudinal construction joints in bridge slab.

For concrete approach pavement details, see roadway plans.

See Missouri Standard Plan 609.00 for details of Type A curb.

Payment for furnishing all materials, labor and excavation necessary to construct the approach slab, including the timber header, sleeper slab, underdrain, Type 5 aggregate base, joint filler and all other appurtenances and incidental work as shown on this sheet, complete in place, will be considered completely covered by the contract unit price for Bridge Approach Slab (Major) per square yard.

* Seal joint between vertical face of approach slab and wing with sealant in accordance with Sec 717 for silicone joint sealant for saw cut and formed joints.

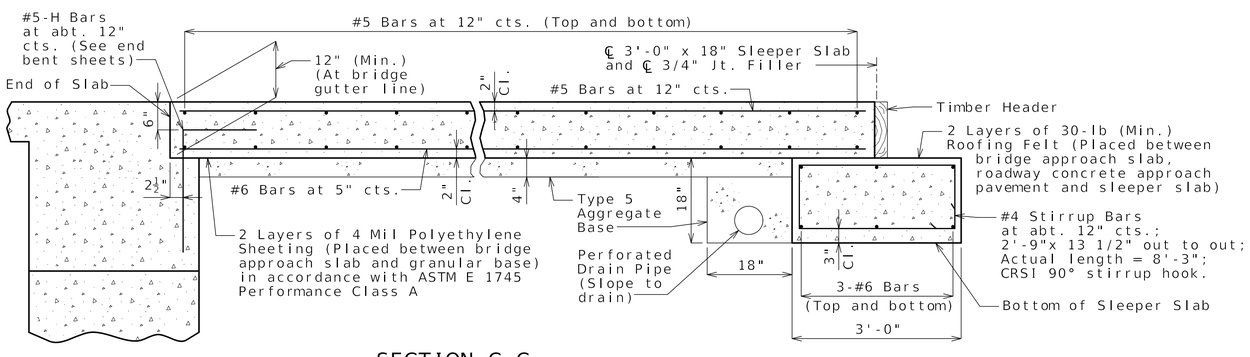

SECTION C-C

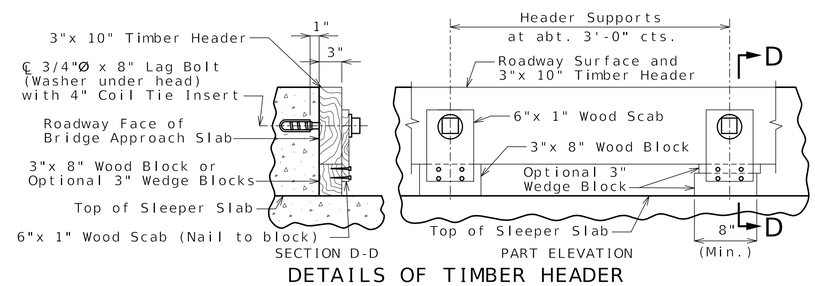

DETAILS OF TIMBER HEADER

Remove timber header when concrete pavement is placed.

BRIDGE APPROACH SLAB (MAJOR)

Detailed Jan. 2025
Checked Jan. 2025

Note: This drawing is not to scale. Follow dimensions.

STATE OF MISSOURI ALEX BENZ NUMBER PE-2018003121 PROFESSIONAL ENGINEER

Alex C. Benz

02/13/2025 11:53:45 AM
Alex Benz - Civil
MO PE-2018003121

DATE PREPARED	
2/12/2025	
ROUTE	STATE
I-70	MO
DISTRICT	SHEET NO.
BR	30
COUNTY	
BOONE	
JOB NO.	
JST0021	
CONTRACT ID.	
PROJECT NO.	
BRIDGE NO.	
A9545	

DATE	DESCRIPTION
12/12/24	REV. A - PRELIMINARY REVIEW
01/31/25	REV. B - FINAL REVIEW
02/14/25	REV. 0 - RELEASED FOR CONSTRUCTION

MISSOURI HIGHWAYS AND TRANSPORTATION COMMISSION
105 WEST CAPITOL
JEFFERSON CITY, MO 65102
1-888-ASK-MODOT (1-888-275-6636)

MoDOT IMPROVE I-70 DB PROJECT 1

EFK•Moen
Civil Engineering Design
13523 Barrett Parkway Dr
Suite 250
St. Louis, MO 63021
Phone 314-394-3100
Fax 314-394-3199
Missouri Certificate of Authority: 001578

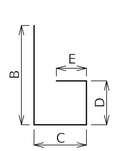

SHAPE 6
or 6S

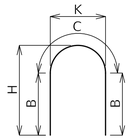

SHAPE 7

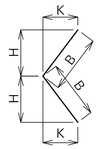

SHAPE 8
or 8S

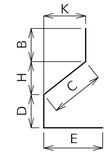

SHAPE 9
or 9S

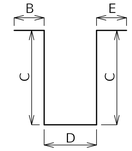

SHAPE 10
or 10S

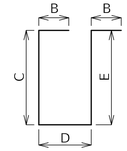

SHAPE 11
or 11S

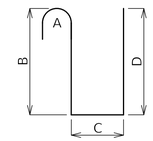

SHAPE 12

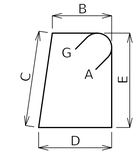

SHAPE 13S

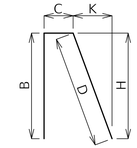

SHAPE 14
or 14S

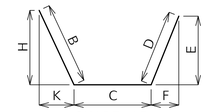

SHAPE 15
or 15S

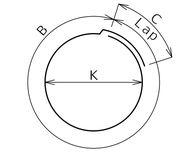

SHAPE 16

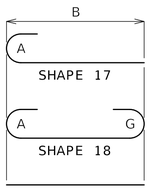

SHAPE 17
SHAPE 18
SHAPE 20

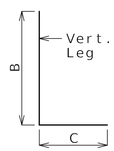

SHAPE 19
or 19S

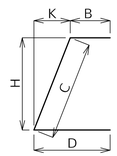

SHAPE 21
or 21S

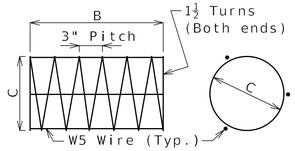

SHAPE 22

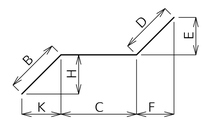

SHAPE 23
or 23S

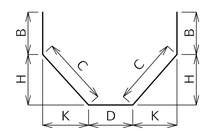

SHAPE 24
or 24S

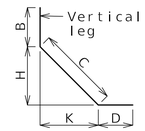

SHAPE 25
or 25S

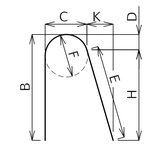

SHAPE 26

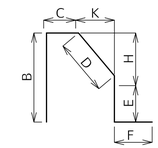

SHAPE 27S

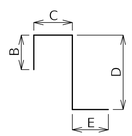

SHAPE 28
or 28S

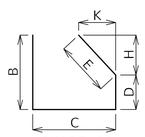

SHAPE 29
or 29S

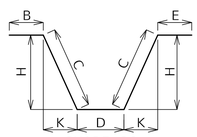

SHAPE 30
or 30S

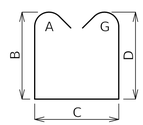

SHAPE 31S

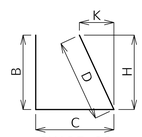

SHAPE 32
or 32S

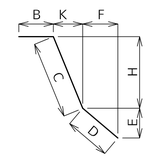

SHAPE 33
or 33S

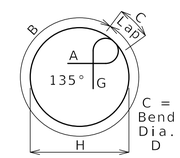

SHAPE 34S

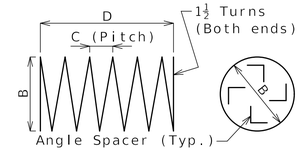

SHAPE 35 (1)

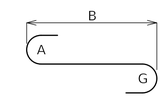

SHAPE 36

Finished Bend Diameters D and Hook Dimensions

Standard Pin Bend Shapes

Size	Case	D	A or G 90°	A or G 180°	J 180°
#4	1	3"	8"	6"	4"
#5	1	3¾"	10"	7"	5"
#6	1	4½"	12"	8¼"	6"
#7	2	5¼"	14"	9¾"	7"
	3	7"	15"	11½"	8¾"
#8	2	6"	16"	11"	8"
	3	8"	17"	13¼"	10"
#9	1	9½"	19½"	15½"	11¾"
#10	1	10¾"	22"	17½"	13¼"
#11	1	12"	24½"	19½"	14⅞"
#14	1	18¼"	31¼"	27½"	21⅝"
#18	1	24"	41½"	36¼"	28½"

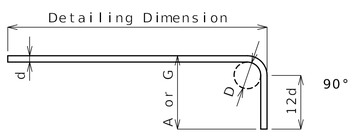

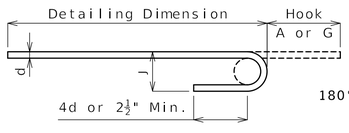

Stirrup Pin Bend Shapes (S)

Size	Case	D	A or G 90°	A or G 135°	A or G 180°	H 135°	J 180°
#4	2	2"	4½"	4½"	5"	2⅝"	3"
	3	3"	5"	5¼"	6"	3"	4"
#5	2	2½"	5¾"	5¾"	5¾"	3⅝"	3¾"
	3	3¾"	6¼"	6½"	7"	3⅞"	5"
#6	1	4½"	12"	7¾"	8¼"	4⅜"	6"

Applicable for all grades of steel.

Case 1 applies to all reinforcement. Case 2 applies to all reinforcement except for galvanized bars. Case 3 applies to galvanized bars only.

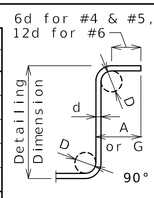

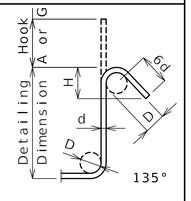

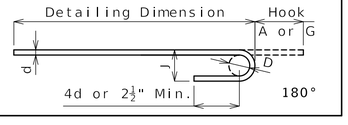

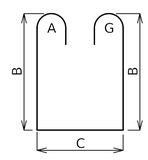

SHAPE 37S

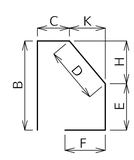

SHAPE 38S

BENDING DIAGRAMS

All dimensions are out to out.

Shapes ending with an S shall be bent in accordance with stirrup pin bend shapes.

Unless otherwise noted, finished bending diameter D is the same for all bends of a shape.

(1) Shall be a deformed or plain spiral bar or wire.

Four angle or channel spacers are required for each column spiral. Spacers are to be placed on inside of spirals. Length and weight of column spirals do not include splices or spacers.

Reinforcing Steel Totals (Pounds)

	Size	Substructure Plain	Substructure Epoxy	Superstructure Slab Plain	Superstructure Slab Epoxy	Superstructure Barrier	Superstructure Slip Form	Entire Bridge Plain	Entire Bridge Epoxy
By Size	W5	0	0	0	0	0	0	0	0
	4	378	0	0	567	0	0	378	567
	5	684	0	0	3475	12373	574	684	16422
	6	1168	0	0	27599	0	0	1168	27599
	7	102	0	0	0	0	0	102	0
	8	1064	0	0	21870	0	0	1064	21870
	9	0	0	0	0	0	0	0	0
	10	0	0	0	0	0	0	0	0
	11	0	0	0	0	0	0	0	0
	14	0	0	0	0	0	0	0	0
	18	0	0	0	0	0	0	0	0
By Type		3,396	0	0	53,511	12,373	574	3,396	53,511

All superstructure reinforcing steel shall be epoxy coated unless otherwise specified.

BENDING DIAGRAMS AND REINFORCING STEEL TOTALS

Detailed Jan. 2025
Checked Jan. 2025

Note: This drawing is not to scale. Follow dimensions.

STATE OF MISSOURI
ALEX BENZ
NUMBER PE-2018003121
PROFESSIONAL ENGINEER

Alex C. Benz
02/13/2025 11:53:46 AM
Alex Benz - Civil
MO PE-2018003121

DATE PREPARED	
2/12/2025	
ROUTE I-70	STATE MO
DISTRICT BR	SHEET NO. 31
COUNTY BOONE	
JOB NO. JST0021	
CONTRACT ID.	
PROJECT NO.	
BRIDGE NO. A9545	

DATE	DESCRIPTION
12/12/24	REV. A - PRELIMINARY REVIEW
01/31/25	REV. B - FINAL REVIEW
02/14/25	REV. 0 - RELEASED FOR CONSTRUCTION

MISSOURI HIGHWAYS AND TRANSPORTATION COMMISSION
105 WEST CAPITOL
JEFFERSON CITY, MO 65102
1-888-ASK-MODOT (1-888-275-6636)

MoDOT IMPROVE I-70 DB PROJECT 1

EFK•Moen
Civil Engineering Design
13523 Barrett Parkway Dr
Suite 250
St. Louis, MO 63021
Phone 314-394-3100
Fax 314-394-3199
Missouri Certificate of Authority: 001578

Bill of Reinforcing Steel

No. Req.	Size/ Mark	Location	Codes C	SH	V	Dimensions B ft in.	C ft in.	D ft in.	E ft in.	F ft in.	H ft in.	K ft in.	Nom. Length ft in.	Actual Length ft in.	Weight lb
		SUBSTRUCTURE													
		INT. BENT NO. 2													
10	7 D200	BEAM		20		2 6.000							2 6	2 6	51
8	8 H200	BEAM		18		23 1.000							24 11	24 11	532
10	6 H201	BEAM		20		23 1.000							23 1	23 1	347
14	6 H202	BEAM		10 S			12.000	3 1.000					5 1	4 9	100
5	6 H203	BEAM		20		5 3.000							5 3	5 3	39
5	6 H204	BEAM		20		4 9.000							4 9	4 9	36
4	6 H205	BEAM		20		6 3.000							6 3	6 3	38
24	5 U200	BEAM		13 S		3 3.000	3 3.000	3 3.000	3 3.000				13 11	13 8	342
15	4 U201	BEAM		10 S			3 3.000	3 3.000					9 9	9 7	96
21	4 U202	BEAM		10 S			12.000	3 3.000					5 3	5 1	71
		INT. BENT NO. 3													
10	7 D300	BEAM		20		2 6.000							2 6	2 6	51
8	8 H300	BEAM		18		23 1.000							24 11	24 11	532
10	6 H301	BEAM		20		23 1.000							23 1	23 1	347
14	6 H302	BEAM		10 S			12.000	3 1.000					5 1	4 9	100
10	6 H303	BEAM		20		5 3.000							5 3	5 3	79
5	6 H304	BEAM		20		5 10.000							5 10	5 10	44
4	6 H305	BEAM		20		6 3.000							6 3	6 3	38
24	5 U300	BEAM		13 S		3 3.000	3 3.000	3 3.000	3 3.000				13 11	13 8	342
15	4 U301	BEAM		10 S			3 3.000	3 3.000					9 9	9 7	96
34	4 U302	BEAM		10 S			12.000	3 3.000					5 3	5 1	115
		SUPERSTRUCTURE													
		END BENT NO. 1													
9	6 F100	WING BRACE	E	15 S		2 3.000	5 3.750	14.000	8.750	10.875	16.875	21.125	8 9	8 8	117
4	6 F101	DIAPHRAGM	E	21 S			7 0.000	2 10.000			6 10.000	18.375	9 10	9 9	59
9	6 F102	WING BRACE	E	15 S		14.000	4 7.000	2 3.000	21.125	16.875	10.875	8.750	8 0	7 11	107
4	6 F103	DIAPHRAGM	E	21 S		2 10.000	7 0.000				6 10.000	18.375	9 10	9 6	57
20	6 H100	BM & DIAPH	E	20		25 0.000							25 0	25 0	751
6	6 H101	DIAPHRAGM	E	20		3 2.000							3 2	3 2	29
2	6 H102	DIAPHRAGM	E	20		2 0.000							2 0	2 0	6
6	6 H103	DIAPHRAGM	E	20		7 6.000							7 6	7 6	68
2	6 H104	DIAPHRAGM	E	20		5 1.000							5 1	5 1	15
16	8 H105	WING	E	20		10 6.000							10 6	10 6	449
40	6 H106	WING	E	20		9 8.000							9 8	9 8	581
3	5 H107	STRAND TIE	E	23		15.000	3 2.375	15.000	3.125	14.625	3.250	14.625	5 8	5 8	18
10	5 U100	BEAM	E	37 S		5 6.000	2 9.000						14 8	14 5	150
21	4 U101	BEAM	E	13 S		2 9.000	2 8.000	2 9.000	2 8.000				11 7	11 4	159
16	5 U102	DIAPHRAGM	E	37 S		3 5.000	2 4.000						10 2	9 10	164
16	6 U103	DIAPHRAGM	E	19 S		2 7.000	2 10.000						5 5	5 3	126
30	6 U104	DIAPHRAGM	E	19 S		3 0.000	4 8.000						7 8	7 6	338
22	5 U105	DIAPHRAGM	E	19 S		2 0.000	15.000						3 3	3 2	73
12	5 V100	BEAM	E	17		5 6.000							6 0	6 0	75
15	6 V101	DIAPHRAGM	E	20		2 7.000							2 7	2 7	58
18	6 V102	WING	E	20		6 6.000							6 6	6 6	176
18	6 V103	WING	E	20		7 0.000							7 0	7 0	189

Bill of Reinforcing Steel

No. Req.	Size/ Mark	Location	Codes C	SH	V	Dimensions B ft in.	C ft in.	D ft in.	E ft in.	F ft in.	H ft in.	K ft in.	Nom. Length ft in.	Actual Length ft in.	Weight lb
		END BENT NO. 4													
10	6 F400	WING	E	15 S		2 3.000	5 2.000	14.000	9.375	10.375	18.000	20.125	8 7	8 6	128
4	6 F401	DIAPHRAGM	E	21 S		17.000	5 2.000	2 9.250			5 1.625	6.625	9 4	9 0	54
9	6 F402	WING	E	15 S		14.000	4 8.000	2 3.000	20.125	18.000	10.375	9.375	8 1	8 0	108
4	6 F403	DIAPHRAGM	E	21 S		2 9.250	6 3.000				6 2.500	8.125	9 0	8 10	53
20	6 H400	BM & DIAPH	E	20		24 7.000							24 7	24 7	738
3	6 H401	DIAPHRAGM	E	20		2 7.000							2 7	2 7	12
6	6 H402	DIAPHRAGM	E	20		7 5.000							7 5	7 5	67
2	6 H403	DIAPHRAGM	E	20		5 0.000							5 0	5 0	15
3	6 H404	DIAPHRAGM	E	20		3 7.000							3 7	3 7	16
1	6 H405	DIAPHRAGM	E	20		2 4.000							2 4	2 4	4
16	8 H406	WING	E	20		10 6.000							10 6	10 6	449
40	6 H407	WING	E	20		9 8.000							9 8	9 8	581
3	5 H408	STRAND TIE	E	23		15.000	3 2.375	15.000	2.500	14.750	2.500	14.750	5 8	5 8	18
9	5 U400	BEAM	E	37 S		5 7.000	2 9.000						14 11	14 7	137
22	4 U401	BEAM	E	13 S		2 9.000	2 8.000	2 9.000	2 8.000				11 7	11 4	167
1	4 U402	BEAM	E	10 S			2 8.000	2 9.000					8 1	7 11	5
14	5 U403	DIAPHRAGM	E	37 S		3 5.000	2 3.000						10 1	9 9	142
14	6 U404	DIAPHRAGM	E	19 S		2 8.000	2 9.000						5 5	5 3	110
30	6 U405	DIAPHRAGM	E	19 S		3 0.000	4 7.000						7 7	7 5	334
22	5 U406	DIAPHRAGM	E	19 S		2 0.000	15.000						3 3	3 2	73
10	5 V400	BEAM	E	17		5 7.000							6 1	6 1	63
15	6 V401	DIAPHRAGM	E	20		2 8.000							2 8	2 8	60
2	6 V402	WING	E	20		7 3.000							7 3	7 3	22
16	6 V403	WING	E	20		7 1.000							7 1	7 1	170
18	6 V404	WING	E	20		6 11.000							6 11	6 11	187
		INT. BENT. NO. 2													
		DIAPHRAGM													
4	6 H250	DIAPHRAGM	E	20		5 1.000							5 1	5 1	31
4	6 H251	DIAPHRAGM	E	20		7 8.000							7 8	7 8	46
8	4 H252	DIAPHRAGM	E	20		7 8.000							7 8	7 8	41
4	5 H253	STRAND TIE	E	23			3 3.000	15.000	3.250	14.625			4 6	4 6	19
2	5 H254	STRAND TIE	E	23		15.000	3 3.000	15.000	3.250	14.625	3.250	14.625	5 9	5 9	12
16	4 U250	DIAPHRAGM	E	28 S			18.000	3 5.000	2 5.000				7 4	7 2	77
8	6 U251	DIAPHRAGM	E	28 S			2 2.000	3 5.000	2 9.000				8 4	8 0	96
8	6 U252	DIAPHRAGM	E	28 S			2 2.000	2 9.000	2 9.000				7 8	7 4	88
8	6 U253	DIAPHRAGM	E	28 S			2 2.000	2 9.000	2 2.000				7 1	6 9	81
4	5 U254	DIAPHRAGM	E	6		4 5.000	16.000						5 9	5 6	23
12	5 U255	DIAPHRAGM	E	6		4 5.000	16.000	16.000					7 1	6 10	86
8	5 V250	DIAPHRAGM	E	20		3 8.000							3 8	3 8	31
		INT. BENT. NO. 3													
		DIAPHRAGM													
4	6 H350	DIAPHRAGM	E	20		5 1.000							5 1	5 1	31
4	6 H351	DIAPHRAGM	E	20		7 8.000							7 8	7 8	46
8	4 H352	DIAPHRAGM	E	20		7 8.000							7 8	7 8	41
4	5 H353	STRAND TIE	E	23			3 3.000	15.000	3.250	14.625			4 6	4 6	19
2	5 H354	STRAND TIE	E	23		15.000	3 3.000	15.000	3.250	14.625	3.250	14.625	5 9	5 9	12
16	4 U350	DIAPHRAGM	E	28 S			18.000	3 5.000	2 5.000				7 4	7 2	77
8	6 U351	DIAPHRAGM	E	28 S			2 2.000	3 5.000	2 9.000				8 4	8 0	96
8	6 U352	DIAPHRAGM	E	28 S			2 2.000	2 9.000	2 9.000				7 8	7 4	88
8	6 U353	DIAPHRAGM	E	28 S			2 2.000	2 9.000	2 2.000				7 1	6 9	81
4	5 U354	DIAPHRAGM	E	6		4 5.000	16.000						5 9	5 6	23
12	5 U355	DIAPHRAGM	E	6		4 5.000	16.000	16.000					7 1	6 10	86
8	5 V350	DIAPHRAGM	E	20		3 8.000							3 8	3 8	31

Nominal lengths are based on out to out dimensions shown in bending diagrams and are listed to the nearest inch for fabricator's use. Actual lengths are measured along centerline bar to the nearest inch. Weights are based on actual lengths.

For bending diagrams and steel reinforcing totals, see Sheet No. _.

Detailed Jan. 2025
Checked Jan. 2025

All bars shall be Grade 60.

BILL OF REINFORCING STEEL

Note: This drawing is not to scale. Follow dimensions.

Codes: C = Required coatings, where E = Epoxy Coated and G = Galvanized.

SH = Required shape, see bending diagrams.

V = Sets of varied bars and number of bars of each length. Bar dimensions vary in equal increments between dimensions shown on this line and the following line and the actual length dimension shown on this line and the following line vary by the specified increment.

STATE OF MISSOURI
ALEX BENZ
NUMBER PE-2018003121
PROFESSIONAL ENGINEER

Alex C. Benz
02/13/2025 11:53:46 AM
Alex Benz - Civil
MO PE-2018003121

DATE PREPARED	2/12/2025
ROUTE	I-70
STATE	MO
DISTRICT	BR
SHEET NO.	32
COUNTY	BOONE
JOB NO.	JST0021
CONTRACT ID.	
PROJECT NO.	
BRIDGE NO.	A9545

DATE	DESCRIPTION
12/12/24	REV. A - PRELIMINARY REVIEW
01/31/25	REV. B - FINAL REVIEW
02/14/25	REV. 0 - RELEASED FOR CONSTRUCTION

MISSOURI HIGHWAYS AND TRANSPORTATION COMMISSION
105 WEST CAPITOL
JEFFERSON CITY, MO 65102
1-888-ASK-MODOT (1-888-275-6636)

MoDOT IMPROVE I-70 DB PROJECT 1

EFK•Moen
Civil Engineering Design
13523 Barrett Parkway Dr
Suite 250
St. Louis, MO 63021
Phone 314-394-3100
Fax 314-394-3199
Missouri Certificate of Authority: 001578

Bill of Reinforcing Steel

No. Req.	Size/ Mark	Location	Codes C	Codes SH	Codes V	Dimensions B ft in.	C ft in.	D ft in.	E ft in.	F ft in.	H ft in.	K ft in.	Nom. Length ft in.	Actual Length ft in.	Weight lb
		SLAB													
10	6 S1	SLAB	E	20	2	23 5.000							23 5	23 5	202
		INCR=60IN				3 5.000							3 5	3 5	
442	6 S2	SLAB	E	20		24 5.000							24 5	24 5	16210
5	6 S3	SLAB	E	20	2	23 1.000							23 1	23 1	131
		INCR=102IN				6 1.000							6 1	6 1	
105	8 S4	SLAB	E	20		48 8.000							48 8	48 8	13644
18	8 S5	SLAB	E	20		38 4.000							38 4	38 4	1842
18	8 S6	SLAB	E	20		36 6.000							36 6	36 6	1754
18	8 S7	SLAB	E	20		38 5.000							38 5	38 5	1846
18	8 S8	SLAB	E	20		39 3.000							39 3	39 3	1886
448	5 S9	SLAB	E	20		4 9.000							4 9	4 9	2220
84	6 S10	SLAB	E	20		39 11.000							39 11	39 11	5036
		BARRIER													
20	5 K1	BARRIER	E	27 S		3 8.000	9.250	5.375	3 2.750		5.250	1.000	8 1	7 11	165
61	5 K2	BARRIER	E	27 S		3 8.000	9.250	14.500	2 5.750		14.250	2.750	8 2	7 11	504
4	5 K3	BARRIER	E	27 S		22.500	9.250	14.500	7.750	12.000	14.250	2.750	5 6	5 2	22
10	5 K4	BARRIER	E	19 S	2	2 3.000	10.000						3 1	3 0	32
		INCR=0 1/2 IN				2 5.000	10.000						3 3	3 2	
10	5 K5	BARRIER	E	38 S	2			18.500	8.375	8.250	18.000	4.000	2 11	2 9	31
		INCR=0 1/2 IN						20.500	8.375	8.250	20.000	4.500	3 1	2 11	
6	5 K6	BARRIER	E	19 S		2 5.625	10.000						3 4	3 2	20
6	5 K7	BARRIER	E	21 S			2 5.000	10.000			2 4.375	5.875	3 3	3 2	20
18	5 K8	BARRIER	E	19 S	2	2 7.375	10.000						3 5	3 4	65
		INCR=0 3/4 IN				3 1.375	10.000						3 11	3 10	
18	5 K9	BARRIER	E	21 S	2		2 7.250	10.000			2 6.625	6.500	3 5	3 4	69
		INCR=0 3/4 IN					3 1.375	10.000			3 0.625	7.500	3 11	3 10	
9	5 K10	BARRIER	E	19 S		3 1.375	10.000						3 11	3 10	36
9	5 K11	BARRIER	E	21 S			3 1.875	10.000			3 1.125	7.500	4 0	3 11	37
12	5 K12	BARRIER	E	20		11 1.000							11 1	11 1	139
6	5 K13	BARRIER	E	20	2	10 4.000							10 4	10 4	46
		INCR=36IN				4 4.000							4 4	4 4	
24	5 K14	BARRIER	E	20		10 9.000							10 9	10 9	269
12	5 K15	BARRIER	E	20	2	10 0.000							10 0	10 0	88
		INCR=14 3/8 IN				4 0.000							4 0	4 0	
12	5 K16	BARRIER	E	20		10 11.000							10 11	10 11	137
6	5 K17	BARRIER	E	20	2	10 2.000							10 2	10 2	45
		INCR=36IN				4 2.000							4 2	4 2	
10	5 K18	BARRIER	E	19 S	2	2 4.250	10.000						3 2	3 1	33
		INCR=0 1/2 IN				2 6.250	10.000						3 4	3 3	
10	5 K19	BARRIER	E	38 S	2			18.500	9.500	8.250	18.000	4.000	3 0	2 10	32
		INCR=0 1/2 IN						20.500	9.500	8.250	20.000	4.500	3 2	3 0	
6	5 K20	BARRIER	E	19 S		2 6.750	10.000						3 5	3 3	20
6	5 K21	BARRIER	E	21 S			2 6.625	10.000			2 6.000	6.250	3 5	3 4	21
18	5 K22	BARRIER	E	19 S	2	2 8.500	10.000						3 6	3 5	66
		INCR=0 3/4 IN				3 2.500	10.000						4 0	3 11	
18	5 K23	BARRIER	E	21 S	2		2 8.500	10.000			2 7.750	6.750	3 6	3 6	71
		INCR=0 3/4 IN					3 2.500	10.000			3 1.750	7.750	4 0	3 11	
8	5 K24	BARRIER	E	19 S		3 3.000	10.000						4 1	4 0	33
8	5 K25	BARRIER	E	21 S			3 3.000	10.000			3 2.250	7.750	4 1	4 0	33
226	5 R1	BARRIER	E	26		3 2.000	5.500	2.250	3 1.375	5.500	3 0.750	6.750	6 11	6 7	1552
226	5 R2	BARRIER	E	19 S		19.875	9.500						2 5	2 4	550
451	5 R3	BARRIER	E	27 S			9.500	15.250	5.000	12.000	15.000	3.000	3 6	3 3	1529
80	5 R4	BARRIER	E	20		11 9.000							11 9	11 9	980
10	5 R5	BARRIER	E	20		46 2.000							46 2	46 2	482
40	5 R6	BARRIER	E	20		35 4.000							35 4	35 4	1474
10	5 R7	BARRIER	E	20		56 7.000							56 7	56 7	590
225	5 R8	BARRIER	E	26		3 3.000	5.500	2.250	3 1.375	5.500	3 0.750	6.750	6 11	6 7	1545
225	5 R9	BARRIER	E	19 S		21.125	9.500						2 7	2 5	567
10	5 R10	BARRIER	E	20		46 5.000							46 5	46 5	484
10	5 R11	BARRIER	E	20		56 2.000							56 2	56 2	586
		SLIP FORM													
40	5 C1	SLIP FORM	E	20		12 0.000							12 0	12 0	501
8	5 C2	SLIP FORM	E	20		8 9.000							8 9	8 9	73

Bill of Reinforcing Steel

No. Req.	Size/ Mark	Location	Codes C	Codes SH	Codes V	Dimensions B ft in.	C ft in.	D ft in.	E ft in.	F ft in.	H ft in.	K ft in.	Nom. Length ft in.	Actual Length ft in.	Weight lb

Nominal lengths are based on out to out dimensions shown in bending diagrams and are listed to the nearest inch for fabricator's use. Actual lengths are measured along centerline bar to the nearest inch. Weights are based on actual lengths.

For bending diagrams and steel reinforcing totals, see Sheet No. _.

All bars shall be Grade 60.

Codes: C = Required coatings, where E = Epoxy Coated and G = Galvanized.

SH = Required shape, see bending diagrams.

V = Sets of varied bars and number of bars of each length. Bar dimensions vary in equal increments between dimensions shown on this line and the following line and the actual length dimension shown on this line and the following line vary by the specified increment.

Detailed Jan. 2025
Checked Jan. 2025

BILL OF REINFORCING STEEL

Note: This drawing is not to scale. Follow dimensions.

STATE OF MISSOURI
ALEX BENZ
NUMBER PE-2018003121
PROFESSIONAL ENGINEER

Alex C. Benz
02/13/2025 11:53:46 AM
Alex Benz - Civil
MO PE-2018003121

DATE PREPARED 2/12/2025
ROUTE I-70
STATE MO
DISTRICT BR
SHEET NO. 33
COUNTY BOONE
JOB NO. JST0021
CONTRACT ID.
PROJECT NO.
BRIDGE NO. A9545

DATE	DESCRIPTION
12/12/24	REV. A - PRELIMINARY REVIEW
01/31/25	REV. B - FINAL REVIEW
02/14/25	REV. 0 - RELEASED FOR CONSTRUCTION

MISSOURI HIGHWAYS AND TRANSPORTATION COMMISSION
105 WEST CAPITOL
JEFFERSON CITY, MO 65102
1-888-ASK-MODOT (1-888-275-6636)

MoDOT IMPROVE I-70 DB PROJECT 1

EFK•Moen
Civil Engineering Design
13523 Barrett Parkway Dr
Suite 250
St. Louis, MO 63021
Phone 314-394-3100
Fax 314-394-3199
Missouri Certificate of Authority: 001578

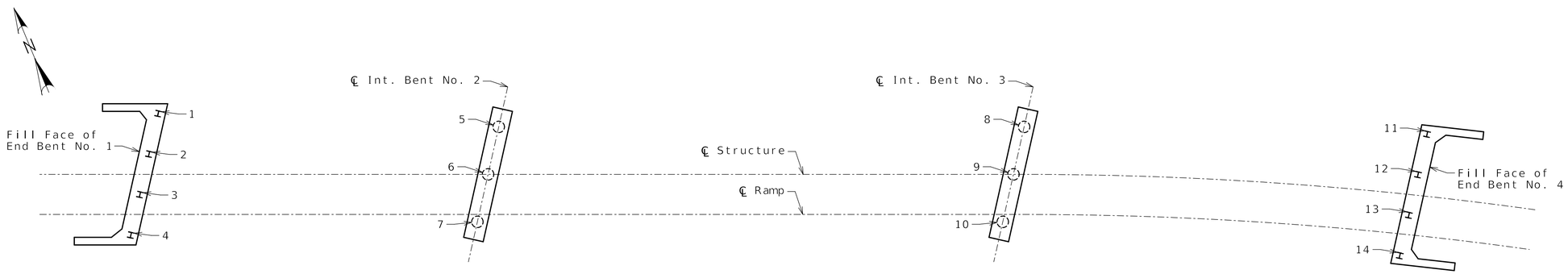

PART PLAN SHOWING PILE NUMBERING FOR RECORDING AS-BUILT PILE DATA

As-Built Pile Data

Pile No.	Length in Place (ft)	Computed Nominal Axial Compressive Resistance (kips)	Remarks
			End Bent No. 1
1			
2			
3			
4			
			End Bent No. 4
11			
12			
13			
14			

Note:
Indicate in remarks column:
A. Pile type and grade
B. Batter
C. Driven to practical refusal

This sheet to be completed by MoDOT construction personnel.

As-Built Pile Data

Pile No.	Length in Place (ft)	PDA Nom. Axial Compressive Resistance (kips)	PDA End of Drive Blow Count (blows/in.)	Actual End of Drive Blow Count (blows/in.)	Remarks
					Int. Bent No. 2
5					
6					
7					
					Int. Bent No. 3
8					
9					
10					

Note:
Indicate in remarks column:
A. Pile type and grade
B. Batter
C. Driven to practical refusal
D. PDA test pile
E. Minimum tip elevation controlled
(Use when actual blow count is less than PDA blow count due to minimum tip elevation requirement. A plus sign (+) shall be placed after the PDA nominal axial compressive resistance value indicating actual value is higher than PDA value.)

This sheet to be completed by MoDOT construction personnel.

AS-BUILT PILE DATA

Detailed Jan. 2025
Checked Jan. 2025

Note: This drawing is not to scale. Follow dimensions.

STATE OF MISSOURI
ALEX BENZ
NUMBER PE-2018003121
PROFESSIONAL ENGINEER

Alex C. Benz
02/13/2025 11:53:46 AM
Alex Benz - Civil
MO PE-2018003121

DATE PREPARED	
2/12/2025	
ROUTE: I-70	STATE: MO
DISTRICT: BR	SHEET NO.: 34
COUNTY: BOONE	
JOB NO.: JST0021	
CONTRACT ID.	
PROJECT NO.	
BRIDGE NO.: A9545	

DATE	DESCRIPTION
12/12/24	REV. A - PRELIMINARY REVIEW
01/31/25	REV. B - FINAL REVIEW
02/14/25	REV. 0 - RELEASED FOR CONSTRUCTION

MISSOURI HIGHWAYS AND TRANSPORTATION COMMISSION
105 WEST CAPITOL
JEFFERSON CITY, MO 65102
1-888-ASK-MODOT (1-888-275-6636)

MoDOT IMPROVE I-70 DB PROJECT 1

EFK•Moen
Civil Engineering Design
13523 Barrett Parkway Dr
Suite 250
St. Louis, MO 63021
Phone 314-394-3100
Fax 314-394-3199
Missouri Certificate of Authority: 001578

TSI geotechnical, inc.

Missouri Department of Transportation
Construction and Materials

BORING NO. BR 7-1A
Page 1 of 1

Job No.: 20241040.00
County: Boone
Route: I-70
Design:
Skew:
Location: Columbia, Missouri
Bent:
Logged By: SO
Operator: LRK
Station:
Northing: 1681442.097
Date of Work: 04/15/24-04/15/24
Offset:
Easting: 756679.256
Depth to Water:
Elevation: 671.1
Requested Northing:
Depth Hole Open:
Requested Station:
Requested Easting:
Time Change:
Requested Offset:
Equipment: CME 550X,Split-Spoon Sampler, Shelby Tube
Requested Elevation:
Location Note: (38.9621144°, -92.2965312°)
Drill No.:
Hammer Efficiency: 90%
Drilling Method: HSA

Depth (ft)	Graphic	Description	Elevation (ft)	Sample Type	REC % (RQD %)	Blow Counts (N_{60})	Shear Data	Field Tests	Index Tests
0		0.0-2.8' (CH) Brown and gray, fat CLAY, with sand and gravel	670						
					67	3-7-6 (20)		PP = 3.75 tsf	MC = 13.2%
		2.8-5.5' (CL) Brown, lean CLAY, with sand and gravel 3.0' (sample disturbed)			83		Qu Test Results MC = 13.1%	PP = 2.25 tsf	LL = 40 PL = 15
5		5.5-12.0' (CH) Brown and gray, fat CLAY 6.0' -gravelly below 6.0 ft.	665						
					56	9-11-7 (27)		PP = 2.75 tsf	MC = 24.2%
					22	9-9-13 (33)			MC = 16.5%
10		10.0' -rough drilling below 10.0 ft.	660						
		12.0-22.0' LIMESTONE, gray, hard to very hard, slightly weathered, finely crystalline to aphanitic, medium to thick bedded, dense, with chert nodules and seams			0	50/0.0'			
					100 (100)		Qu Test Results UCS = 2480 ksf MC = 0.0% γ_{moist} = 167.4 pcf		
15		15.0' -thin to thick bedded below 15.0 ft.	655						
					98 (90)		Qu Test Results UCS = 1670 ksf		
20			650		100 (92)		Qu Test Results UCS = 1720 ksf MC = 0.0% γ_{moist} = 166.2 pcf		
		Refusal at 12.0 feet. Bottom of borehole at 22.0 feet.							

N_{60} = (Em/60)Nm N_{60} - Corrected N value for standard 60% SPT efficiency; Em - Measured hammer efficiency in percent; Nm - Observed N-value
(1) = Assumed, (2) = Actual

Coordinate System: **Coordinate Zone:** **Coordinate Proj. Factor:**
Coordinate Datum: **Coordinate Units:** U.S. Survey Feet

* Persons using this information are cautioned that the materials shown are determined by the equipment noted and accuracy of the "log of materials" is limited thereby and by judgement of the operator. THIS INFORMATION IS FOR DESIGN PURPOSES ONLY.

LETTER BOREHOLE - MODOT 20150728.GDT - 8/15/24 11:51 - \\TSI\PROJECTS\ST\LGEOTECH\2024 PROJECTS\20241040.00 I-70 THIRD LANE (KINGDOM CITY TO COLUMBIA)\WORKING FILES\MODOT I-70 3RD LANE 20241040 - PRELIMINARY.GPJ

STATE OF MISSOURI ALEX BENZ NUMBER PE-2018003121 PROFESSIONAL ENGINEER
Alex C. Benz
02/13/2025 11:53:46 AM
Alex Benz - Civil
MO PE-2018003121

DATE PREPARED 2/12/2025
ROUTE I-70 | STATE MO
DISTRICT BR | SHEET NO. 35
COUNTY BOONE
JOB NO. JST0021
CONTRACT ID.
PROJECT NO.
BRIDGE NO. A9545

DATE	DESCRIPTION
12/12/24	REV. A - PRELIMINARY REVIEW
01/31/25	REV. B - FINAL REVIEW
02/14/25	REV. 0 - RELEASED FOR CONSTRUCTION

MISSOURI HIGHWAYS AND TRANSPORTATION COMMISSION
105 WEST CAPITOL
JEFFERSON CITY, MO 65102
1-888-ASK-MODOT (1-888-275-6636)

MoDOT IMPROVE I-70 DB PROJECT 1

EFK•Moen
Civil Engineering Design
13523 Barrett Parkway Dr Suite 250 St. Louis, MO 63021
Phone 314-394-3100 Fax 314-394-3199
Missouri Certificate of Authority: 001578

BORING DATA

Note: For locations of borings, see Sheet No. 1.

Detailed Jan. 2025
Checked Jan. 2025

Note: This drawing is not to scale. Follow dimensions.

TSI geotechnical, inc.

Missouri Department of Transportation
Construction and Materials

BORING NO. BR 7-3A
Page 1 of 2

Job No.: 20241040.00 **County:** Boone **Route:** I-70
Design: **Skew:** **Location:** Columbia, Missouri
Bent: **Logged By:** SO **Operator:** LRK
Station: **Northing:** 1681366.454 **Date of Work:** 04/11/24-04/11/24
Offset: **Easting:** 756798.332 **Depth to Water:** 18.5
Elevation: 668.7 **Requested Northing:** **Depth Hole Open:**
Requested Station: **Requested Easting:** **Time Change:**
Requested Offset: **Equipment:** CME 550X,Split-Spoon Sampler, Shelby Tube
Requested Elevation: **Location Note:** (38.9619321, -92.2961325)
Drill No.: **Hammer Efficiency:** 90% **Drilling Method:** HSA

Depth (ft)	Description	Elevation (ft)	Sample Type	REC % (RQD %)	Blow Counts (N_{60})	Shear Data	Field Tests	Index Tests
0	0.0-12.0' (CL) Brown, lean CLAY, with gravel							
	1.0' -sandy from 1.0 to 2.5 ft.			11	9-10-7 (26)			
	3.5' -brown and gray below 3.5 ft. 3.5' -with sand from 3.5 to 7.0 ft.	665		39	15-6-5 (17)		PP = 2.25 tsf	MC = 12.8%
5				92		Qu Test Results MC = 13.2%	PP = 1.75 tsf	LL = 26 PL = 15
	8.5' -sandy below 8.5 ft.	660		39	11-4-3 (11)			MC = 11.5%
10								
	12.0-23.5' (CH) Gray, fat CLAY, with sand and gravel	655		39	3-3-5 (12)		PP = 3.50 tsf	MC = 12.1%
15	15.5' -rough drilling from 15.5 to 17.0 ft.							
		650		44	7-8-10 (27)		PP = 0.75 tsf	LL = 61 PL = 19 MC = 20.7%
20								
	23.5-24.0' Gray, highly weath. LIMESTONE	645		100	50/0.1'			
25	24.0-25.0' Cherty LIMESTONE, gray, hard			83 (33)				

N_{60} = (Em/60)Nm N_{60} - Corrected N value for standard 60% SPT efficiency; Em - Measured hammer efficiency in percent; Nm - Observed N-value
(1) = Assumed, (2) = Actual

Coordinate System: **Coordinate Zone:** **Coordinate Proj. Factor:**
Coordinate Datum: **Coordinate Units:** U.S. Survey Feet

* Persons using this information are cautioned that the materials shown are determined by the equipment noted and accuracy of the "log of materials" is limited thereby and by judgement of the operator. THIS INFORMATION IS FOR DESIGN PURPOSES ONLY.

LETTER BOREHOLE - MODOT 20150728.GDT - 8/15/24 11:51 - \\TSI\PROJECTS\STL\GEOTECH\2024 PROJECTS\20241040.00 I-70 THIRD LANE (KINGDOM CITY TO COLUMBIA)\WORKING FILES\MODOT I-70 3RD LANE 20241040 - PRELIMINARY.GPJ

TSI geotechnical, inc.

Missouri Department of Transportation
Construction and Materials

BORING NO. BR 7-3A
Page 2 of 2

Job No.: 20241040.00 **County:** Boone **Route:** I-70
Design: **Skew:** **Location:** Columbia, Missouri
Bent: **Logged By:** SO **Operator:** LRK
Station: **Northing:** 1681366.454 **Date of Work:** 04/11/24-04/11/24
Offset: **Easting:** 756798.332 **Depth to Water:** 18.5
Elevation: 668.7 **Requested Northing:** **Depth Hole Open:**
Requested Station: **Requested Easting:** **Time Change:**
Requested Offset: **Equipment:** CME 550X,Split-Spoon Sampler, Shelby Tube
Requested Elevation: **Location Note:** (38.9619321, -92.2961325)
Drill No.: **Hammer Efficiency:** 90% **Drilling Method:** HSA

Depth (ft)	Description	Elevation (ft)	Sample Type	REC % (RQD %)	Blow Counts (N_{60})	Shear Data	Field Tests	Index Tests
25	25.0-35.0' Cherty LIMESTONE, gray and tan, hard to very hard, moderately to highly weathered, finely crystalline to aphanitic, dense to pitted	640		90 (33)		Qu Test Results UCS = 1210 ksf		
30	30.0' -gray, moderately weathered, coarse to finely crystalline below 30.0 ft. 32.0' -highly weathered from 32.0 to 33.0 ft.	635		97 (72)		Qu Test Results UCS = 1310 ksf		
35	Bottom of borehole at 35.0 feet.							

N_{60} = (Em/60)Nm N_{60} - Corrected N value for standard 60% SPT efficiency; Em - Measured hammer efficiency in percent; Nm - Observed N-value
(1) = Assumed, (2) = Actual

Coordinate System: **Coordinate Zone:** **Coordinate Proj. Factor:**
Coordinate Datum: **Coordinate Units:** U.S. Survey Feet

* Persons using this information are cautioned that the materials shown are determined by the equipment noted and accuracy of the "log of materials" is limited thereby and by judgement of the operator. THIS INFORMATION IS FOR DESIGN PURPOSES ONLY.

LETTER BOREHOLE - MODOT 20150728.GDT - 8/15/24 11:51 - \\TSI\PROJECTS\STL\GEOTECH\2024 PROJECTS\20241040.00 I-70 THIRD LANE (KINGDOM CITY TO COLUMBIA)\WORKING FILES\MODOT I-70 3RD LANE 20241040 - PRELIMINARY.GPJ

STATE OF MISSOURI ALEX BENZ NUMBER PE-2018003121 PROFESSIONAL ENGINEER
Alex C. Benz
02/13/2025 11:53:46 AM
Alex Benz - Civil
MO PE-2018003121

DATE PREPARED	
2/12/2025	
ROUTE: I-70	STATE: MO
DISTRICT: BR	SHEET NO.: 36
COUNTY: BOONE	
JOB NO.: JST0021	
CONTRACT ID.	
PROJECT NO.	
BRIDGE NO.: A9545	

DATE	DESCRIPTION
12/12/24	REV. A - PRELIMINARY REVIEW
01/31/25	REV. B - FINAL REVIEW
02/14/25	REV. 0 - RELEASED FOR CONSTRUCTION

MISSOURI HIGHWAYS AND TRANSPORTATION COMMISSION
105 WEST CAPITOL
JEFFERSON CITY, MO 65102
1-888-ASK-MODOT (1-888-275-6636)

MoDOT IMPROVE I-70 DB PROJECT 1

EFK•Moen
Civil Engineering Design
13523 Barrett Parkway Dr Suite 250 St. Louis, MO 63021
Phone 314-394-3100 Fax 314-394-3199
Missouri Certificate of Authority: 001578

BORING DATA

Note: For locations of borings, see Sheet No. 1.

Detailed Jan. 2025
Checked Jan. 2025

Note: This drawing is not to scale. Follow dimensions.

Missouri Department of Transportation
Construction and Materials

BORING NO. BR 7-4.1
Page 1 of 1

Job No.: 20241040.00
Design:
Bent:
Station:
Offset:
Elevation: 671.7
Requested Station:
Requested Offset:
Requested Elevation:
Drill No.:

County: Boone
Skew:
Logged By: SO
Northing: 1681227.525
Easting: 756998.155
Requested Northing:
Requested Easting:
Equipment: CME 550X,Split-Spoon Sampler, Shelby Tube
Location Note: (38.9615015, -92.2954744)
Hammer Efficiency: 90%

Route: I-70
Location: Columbia, Missouri
Operator: LRK
Date of Work: 04/11/24-04/11/24
Depth to Water: 9.5
Depth Hole Open:
Time Change:
Drilling Method: HSA

Depth (ft)	Graphic	Description	Elevation (ft)	Sample Type	REC % (RQD %)	Blow Counts (N_{60})	Shear Data	Field Tests	Index Tests
0		0.0-12.0' (CL) Brown, lean CLAY							
		1.0' -with gravel from 1.0 to 2.5 ft.	670		39	4-5-5 (15)		PP = 2.00 tsf	
		3.0' -gray below 3.0 ft.			100		Qu Test Results UCS = 3.17 ksf MC = 18.1% γ_{moist} = 150.8 pcf	PP = 4.50 tsf	LL = 39 PL = 17
5									
			665		78	2-2-2 (6)		PP = 1.00 tsf	MC = 23.1%
					100	2-3-3 (9)		PP = 2.00 tsf	MC = 24.4%
10									
			660						
		12.0-17.0' (CH) Gray, gravelly fat CLAY							
		13.0' -gravelly below 13.0 ft.			75		Qu Test Results MC = 18.4%		LL = 56 PL = 20
15					11	10-10-9 (29)			
			655						
		17.0-24.3' Gray, weathered SHALE							
					100	12-18-33 (77)		PP >4.50 tsf	MC = 20.9%
20									
			650						
					100	28-50/0.3'		PP >4.50 tsf	
		Bottom of borehole at 24.3 feet.							

N_{60} = (Em/60)Nm N_{60} - Corrected N value for standard 60% SPT efficiency; Em - Measured hammer efficiency in percent; Nm - Observed N-value
(1) = Assumed, (2) = Actual

Coordinate System: **Coordinate Zone:** **Coordinate Proj. Factor:**
Coordinate Datum: **Coordinate Units:** U.S. Survey Feet

* Persons using this information are cautioned that the materials shown are determined by the equipment noted and accuracy of the "log of materials" is limited thereby and by judgement of the operator. THIS INFORMATION IS FOR DESIGN PURPOSES ONLY.

Missouri Department of Transportation
Construction and Materials

BORING NO. BR 7-4
Page 1 of 3

Job No.: 20241040.00
Design:
Bent:
Station:
Offset:
Elevation: 668.9
Requested Station:
Requested Offset:
Requested Elevation:
Drill No.:

County: Boone
Skew:
Logged By: SO
Northing: 1681349.112
Easting: 756866.562
Requested Northing:
Requested Easting:
Equipment: CME 550X,Split-Spoon Sampler, Shelby Tube
Location Note: (38.9618677, -92.2959357)
Hammer Efficiency: 90%

Route: I-70
Location: Columbia, Missouri
Operator: LRK
Date of Work: 04/11/24-04/11/24
Depth to Water:
Depth Hole Open:
Time Change:
Drilling Method: HSA

Depth (ft)	Graphic	Description	Elevation (ft)	Sample Type	REC % (RQD %)	Blow Counts (N_{60})	Shear Data	Field Tests	Index Tests
0		0.0-12.0' (CL) Brown, lean CLAY, with gravel							
		1.5' -rough drilling from 1.5 to 3.5 ft.			22	7-9-6 (23)		PP = 1.00 tsf	
			665		0	6-5-5 (15)			
5									
		6.0' -gray below 6.0 ft. 6.0' -sandy from 6.0 to 7.5 ft.			6	7-8-6 (21)			MC = 10.1%
		8.0' (sample disturbed)	660		63		Qu Test Results MC = 17.4% γ_{moist} = 130.2 pcf	PP = 0.75 tsf	LL = 34 PL = 19
10									
		12.0-17.0' Gray, highly weathered LIMESTONE							
			655		33	6-12-13 (38)		PP >4.50 tsf	
15									
		17.0-25.0' Gray, weathered SHALE							
			650		39	20-37-40 (116)			MC = 7.6%
20									
			645		44	24-32-46 (117)			
25									

N_{60} = (Em/60)Nm N_{60} - Corrected N value for standard 60% SPT efficiency; Em - Measured hammer efficiency in percent; Nm - Observed N-value
(1) = Assumed, (2) = Actual

Coordinate System: **Coordinate Zone:** **Coordinate Proj. Factor:**
Coordinate Datum: **Coordinate Units:** U.S. Survey Feet

* Persons using this information are cautioned that the materials shown are determined by the equipment noted and accuracy of the "log of materials" is limited thereby and by judgement of the operator. THIS INFORMATION IS FOR DESIGN PURPOSES ONLY.

STATE OF MISSOURI
ALEX BENZ
NUMBER PE-2018003121
PROFESSIONAL ENGINEER

02/13/2025 11:53:46 AM
Alex Benz - Civil
MO PE-2018003121

DATE PREPARED: 2/12/2025
ROUTE: I-70 | STATE: MO
DISTRICT: BR | SHEET NO.: 37
COUNTY: BOONE
JOB NO.: JST0021
CONTRACT ID.
PROJECT NO.
BRIDGE NO.: A9545

DATE	DESCRIPTION
12/12/24	REV. A - PRELIMINARY REVIEW
01/31/25	REV. B - FINAL REVIEW
02/14/25	REV. 0 - RELEASED FOR CONSTRUCTION

MISSOURI HIGHWAYS AND TRANSPORTATION COMMISSION
105 WEST CAPITOL
JEFFERSON CITY, MO 65102
1-888-ASK-MODOT (1-888-275-6636)

MoDOT IMPROVE I-70 DB PROJECT 1

EFK•Moen
Civil Engineering Design
13523 Barrett Parkway Dr
Suite 250
St. Louis, MO 63021
Phone 314-394-3100
Fax 314-394-3199
Missouri Certificate of Authority: 001578

LETTER BOREHOLE - MODOT 20150728.GDT - 8/15/24 11:51 - \\TSI\PROJECTS\STL\GEOTECH\2024 PROJECTS\20241040.00 I-70 THIRD LANE (KINGDOM CITY TO COLUMBIA)\WORKING FILES\MODOT I-70 3RD LANE 20241040 - PRELIMINARY.GPJ

BORING DATA

Note: For locations of borings, see Sheet No. 1.

Detailed Jan. 2025
Checked Jan. 2025

Note: This drawing is not to scale. Follow dimensions.

TSI geotechnical, inc.

Missouri Department of Transportation
Construction and Materials

BORING NO. BR 7-4
Page 2 of 3

Job No.:	20241040.00	**County:**	Boone	**Route:**	I-70
Design:		**Skew:**		**Location:**	Columbia, Missouri
Bent:		**Logged By:**	SO	**Operator:**	LRK
Station:		**Northing:**	1681349.112	**Date of Work:**	04/11/24-04/11/24
Offset:		**Easting:**	756866.562	**Depth to Water:**	
Elevation:	668.9	**Requested Northing:**		**Depth Hole Open:**	
Requested Station:		**Requested Easting:**		**Time Change:**	
Requested Offset:		**Equipment:**	CME 550X,Split-Spoon Sampler, Shelby Tube		
Requested Elevation:		**Location Note:**	(38.9618677, -92.2959357)		
Drill No.:		**Hammer Efficiency:**	90%	**Drilling Method:**	HSA

Depth (ft)	Graphic	Description	Elevation (ft)	Sample Type	REC % (RQD %)	Blow Counts (N_{60})	Shear Data	Field Tests	Index Tests
25		25.0-27.0' Gray, weathered SHALE							
		27.0-32.0' Black, COAL	640		60	50/0.4'			
30									
		32.0-38.9' Gray, weathered SHALE	635		67	50/0.5'			
35									
			630		55	28-50/0.4'			
40		38.9-39.5' Gray, Calcareous SHALE with limestone band 38.9-46.0'			67 (42)				
		39.5-46.0' Calcareous SHALE, gray, soft to very soft, slightly to highly weathered, thin to thick bedded	625		67 (12)		Qu Test Results UCS = 3.96 ksf		
45									
		46.0-50.0' SHALE, gray and black, soft to very soft, slightly to highly weathered, thin to thick bedded	620		58 (17)		Qu Test Results UCS = 4.08 ksf		
50									

N_{60} = (Em/60)Nm N_{60} - Corrected N value for standard 60% SPT efficiency; Em - Measured hammer efficiency in percent; Nm - Observed N-value
(1) = Assumed, (2) = Actual

Coordinate System: _____ **Coordinate Zone:** _____ **Coordinate Proj. Factor:** _____

Coordinate Datum: _____ **Coordinate Units:** U.S. Survey Feet

* Persons using this information are cautioned that the materials shown are determined by the equipment noted and accuracy of the "log of materials" is limited thereby and by judgement of the operator. THIS INFORMATION IS FOR DESIGN PURPOSES ONLY.

TSI geotechnical, inc.

Missouri Department of Transportation
Construction and Materials

BORING NO. BR 7-4
Page 3 of 3

Job No.:	20241040.00	**County:**	Boone	**Route:**	I-70
Design:		**Skew:**		**Location:**	Columbia, Missouri
Bent:		**Logged By:**	SO	**Operator:**	LRK
Station:		**Northing:**	1681349.112	**Date of Work:**	04/11/24-04/11/24
Offset:		**Easting:**	756866.562	**Depth to Water:**	
Elevation:	668.9	**Requested Northing:**		**Depth Hole Open:**	
Requested Station:		**Requested Easting:**		**Time Change:**	
Requested Offset:		**Equipment:**	CME 550X,Split-Spoon Sampler, Shelby Tube		
Requested Elevation:		**Location Note:**	(38.9618677, -92.2959357)		
Drill No.:		**Hammer Efficiency:**	90%	**Drilling Method:**	HSA

Depth (ft)	Graphic	Description	Elevation (ft)	Sample Type	REC % (RQD %)	Blow Counts (N_{60})	Shear Data	Field Tests	Index Tests
50		50.0-50.5' SHALE, gray and black, soft to very soft, highly to completely weathered, thin to thick bedded							
		Bottom of borehole at 50.5 feet.							

N_{60} = (Em/60)Nm N_{60} - Corrected N value for standard 60% SPT efficiency; Em - Measured hammer efficiency in percent; Nm - Observed N-value
(1) = Assumed, (2) = Actual

Coordinate System: _____ **Coordinate Zone:** _____ **Coordinate Proj. Factor:** _____

Coordinate Datum: _____ **Coordinate Units:** U.S. Survey Feet

* Persons using this information are cautioned that the materials shown are determined by the equipment noted and accuracy of the "log of materials" is limited thereby and by judgement of the operator. THIS INFORMATION IS FOR DESIGN PURPOSES ONLY.

STATE OF MISSOURI ALEX BENZ NUMBER PE-2018003121 PROFESSIONAL ENGINEER

Alex C. Benz
02/13/2025 11:53:47 AM
Alex Benz - Civil
MO PE-2018003121

DATE PREPARED	
2/12/2025	
ROUTE: I-70	STATE: MO
DISTRICT: BR	SHEET NO.: 38
COUNTY: BOONE	
JOB NO.: JST0021	
CONTRACT ID.	
PROJECT NO.	
BRIDGE NO.: A9545	

DATE	DESCRIPTION
12/12/24	REV. A - PRELIMINARY REVIEW
01/31/25	REV. B - FINAL REVIEW
02/14/25	REV. 0 - RELEASED FOR CONSTRUCTION

MISSOURI HIGHWAYS AND TRANSPORTATION COMMISSION
105 WEST CAPITOL
JEFFERSON CITY, MO 65102
1-888-ASK-MODOT (1-888-275-6636)

MoDOT IMPROVE I-70 DB PROJECT 1

EFK•Moen
Civil Engineering Design
13523 Barrett Parkway Dr Suite 250 St. Louis, MO 63021
Phone 314-394-3100 Fax 314-394-3199
Missouri Certificate of Authority: 001578

LETTER BOREHOLE - MODOT 20150728.GDT - 8/15/24 11:51 - \\TSI\PROJECTS\STL\GEOTECH\2024 PROJECTS\20241040.00 I-70 THIRD LANE (KINGDOM CITY TO COLUMBIA)\WORKING FILES\MODOT I-70 3RD LANE 20241040 - PRELIMINARY.GPJ

BORING DATA

Note: For locations of borings, see Sheet No. 1.

Detailed Jan. 2025
Checked Jan. 2025

Note: This drawing is not to scale. Follow dimensions.