07/02/2025
Released for Construction

SEC/SUR 19 TWP 47N RGE 1E

(62'-66.5') 21" PRESTRESSED SPREAD BOX BEAM SPANS
SKEW: 12°00'00" R.A.

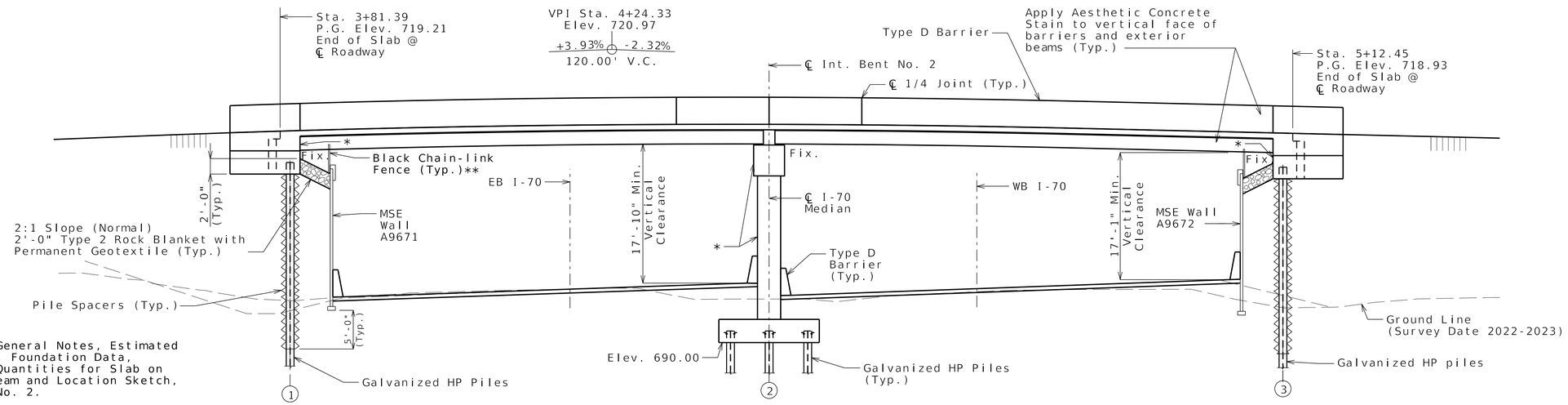

ELEVATION

Note: For General Notes, Estimated Quantities, Foundation Data, Estimated Quantities for Slab on Concrete Beam and Location Sketch, see Sheet No. 2.

Roadway fill exclusive of Select Granular Backfill for Structural Systems shall be completed to the final roadway section and up to the elevation of the bottom of the concrete beam within the limits of the structure and for not less than 25 feet in back of the fill face of the end bents before any piles are driven for any bents falling within the embankment section.

* Apply aesthetic stain to exposed surface of beam cap and columns which will have epoxy-coated reinforcement. See Job Special Provisions for aesthetic stain.

** For details of gutter and fence, see MSE wall plans.

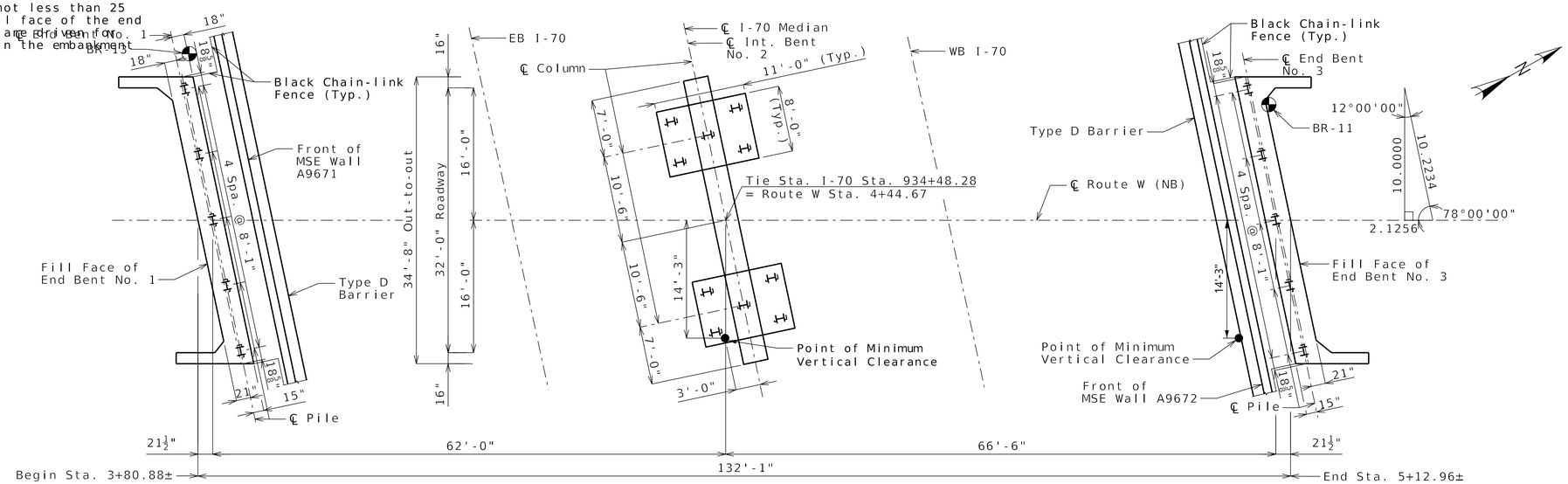

PLAN

Indicates location of post-awarded borings.

Notice and Disclaimer Regarding Boring Log Data

The locations of all subsurface borings for this structure are shown above. Boring logs profile is depicted on Sheet No. 27.

The logs laboratory test results, rock core photographs and other information obtained at these borings are available in the geotechnical memorandum prepared by HNTB for this structure.

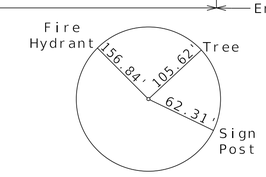

B.M. #68 - Elev. 702.60
Set 5/8" Rebar with Aluminimum Cap
N: 1086990.781, E: 689478.2799

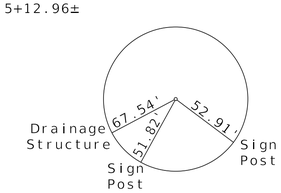

B.M. #69 - Elev. 700.77
Set 5/8" Rebar with Aluminimum Cap
N: 1086914.711, E: 690471.3471

BRIDGE: ROUTE W (NB) OVER ROUTE I-70

ROUTE I-70 FROM ROUTE 47 TO ROUTE 61
ABOUT 6.6 MILES WEST OF ROUTE 61
BEGINNING STATION 3+80.88

Detailed Apr. 2025
Checked Apr. 2025

Note: This drawing is not to scale. Follow dimensions.

DATE PREPARED	7/2/2025
ROUTE	W
STATE	MO
DISTRICT	BR
SHEET NO.	A9670-01
COUNTY	ST. CHARLES
JOB NO.	JST0020
CONTRACT ID.	
PROJECT NO.	
BRIDGE NO.	A9670

DESCRIPTION | DATE

MISSOURI HIGHWAYS AND TRANSPORTATION COMMISSION
105 WEST CAPITOL
JEFFERSON CITY, MO 65102
1-888-ASK-MODOT (1-888-275-6636)

IMPROVE 70 ALLIANCE

HNTB
211 N. BROADWAY STE. 2975
ST LOUIS, MO 63102
CERTIFICATE OF AUTHORITY NO. 001270

Bartlett&West
601 MONROE ST. SUITE 201 - JEFFERSON CITY, MO 65101
PHONE: (573) 634-2448 FAX: (573) 634-8693
CERTIFICATE OF AUTHORITY NO. 000167 - ENGINEERING
WWW.BARTLETTWEST.COM

07/02/2025
Released for Construction

Estimated Quantities

Item		Substr.	Superstr.	Total
Removal of Bridges (A0795)	lump sum			1
Bridge Approach Slab (Major)	sq. yard			150
Galvanized Structural Steel Piles (12 in.)	linear foot	1,870		1,870
Dynamic Pile Testing	each	3		3
Pile Point Reinforcement (H-Pile)	each	20		20
Class B Concrete (Substructure)	cu. yard	84.6		84.6
Aesthetic Concrete Stain	lump sum			1
Type D Barrier	linear foot		270	270
Slab on Concrete Beam	sq. yard		505	505
21 in., Prestressed Concrete Spread Box Beam	linear foot		514	514
Reinforcing Steel (Bridges)	pound		2,594	2,594
Conduit System on Structure	lump sum			1
Reinforcing Steel (Epoxy Coated)	pound		9,340	9,340
Vertical Drain at End Bents	each			2
Laminated Neoprene Bearing Pad	each		8	8
Laminated Neoprene Bearing Pad (Tapered)	each		8	8
Pipe Pile Spacers	each	10		10
Aesthetic Concrete Stain	lump sum			1

Note:

All concrete above the construction joint in the end bents is included in the Estimated Quantities for Slab on Concrete Beam.

All reinforcement in the end bents is included in the Estimated Quantities for Slab on Concrete Beam.

Cost of L4x4 ASTM A709 Grade 36 HP pile anchors and 3/4-inch diameter ASTM F3125 Grade A325 Type 1 bolts, complete in place, will be considered completely covered by the contract unit price for Galvanized Structural Steel Piles (12 in.).

Method of forming the slab shall be as shown on the plans and in accordance with Sec 703. All hardware for forming the slab to be left in place as a permanent part of the structure shall be coated in accordance with ASTM A123 or ASTM B633 with a thickness class SC 4 and a finish type I, II or III.

Foundation Data

Type	Design Data		Bent Number 1	2	3
Load Bearing Pile	Pile Type and Size		HP 12x53	HP 12x53	HP 12x53
	Number	ea	5	10	5
	Approximate Length Per Each	ft	108	84	98
	Pile Point Reinforcement	ea	All	All	All
	Min. Galvanized Penetration (Elev.)	ft	679	674	680
	Pile Driving Verification Method		DT	DT	DT
	Resistance Factor		0.65	0.65	0.65
	Minimum Nominal Axial Compressive Resistance	kip	271	419	271

DT = Dynamic Testing

Load Bearing Pile:
Minimum Nominal Axial Compressive Resistance = Maximum Factored Loads/Resistance Factor

Driven Piles:
All piles shall be galvanized down to the minimum galvanized penetration (elevation).

Pile point reinforcement need not be galvanized. Shop drawings will not be required for pile point reinforcement.

The contractor shall make every effort to achieve the minimum galvanized penetration (elevation) shown on the plans for all piles. Deviations in penetration less than 5 feet of the minimum will be considered acceptable provided the contractor makes the necessary corrections to ensure the minimum penetration is achieved on subsequent piles.

Piles at all bents are anticipated to be driven to refusal on rock. Review all borings for depth of rock and restrict driving as appropriate to comply with hard rock driving criteria in accordance with Sec 702.

Estimated Quantities for Slab on Prestressed Concrete Spread Box Beam

Item		Total
Class B-2 Concrete	cu. yard	X
Reinforcing Steel (Epoxy Coated)	pound	XX,XXX

The area of the concrete slab will be measured to the nearest square yard longitudinally from end of slab to end of slab and transversely from out to out of bridge slab (or with the horizontal dimensions as shown on the plan of slab).

Method of forming the slab shall be as shown on the plans and in accordance with Sec 703. All hardware for forming the slab to be left in place as a permanent part of the structure shall be coated in accordance with ASTM A123 or ASTM B633 with a thickness class SC 4 and a finish type I, II or III.

General Notes:

Design Specifications:
2020 AASHTO LRFD Bridge Design Specifications (9th Ed.)
2011 AASHTO Guide Specifications for LRFD Seismic Bridge Design (2nd Ed.) and 2014 Interim Revisions
Seismic Design Category = B (Seismic Detailing)
Design earthquake response spectral acceleration coefficient at 1.0 second period, S_{D1} = 0.178g
Acceleration Coefficient (effective peak ground acceleration coefficient), As = 0.158g
Operational Importance = 1.05

Design Loading:
Vehicular = HL-93
Future Wearing Surface = 35 lb/sf
Earth = 120 lb/cf
Equivalent Fluid Pressure = 45 lb/cf (Min.)
Superstructure: Simply-supported, non-composite for dead load.
Simply-supported composite for live load.

Design Unit Stresses:

Class B Concrete (Substructure)	f'c = 3,000 psi
Class B-1 Concrete (Barrier)	f'c = 4,000 psi
Class B-2 Concrete (Superstructure,except Prestressed Beams and Barrier)	f'c = 4,000 psi
Reinforcing Steel (ASTM A706 Grade 60)	fy = 60,000 psi
Structural Steel HP Pile (ASTM A709 Grade 50)	fy = 50,000 psi

For precast prestressed box beam stresses, see Sheets No. 13 and 14.

Standard Plans:
609.00, 617.10, 617.20 and 706.35

Neoprene Pads:
Neoprene Bearing Pads shall be 60 durometer and shall be in accordance with Sec 716.

Joint Filler:
All joint filler shall be in accordance with Sec 1057 for preformed sponge rubber expansion and partition joint filler, except as noted.

Reinforcing Steel:
Minimum clearance to reinforcing steel shall be 1 1/2", unless otherwise shown.

Minimum clearance between galvanized piles and uncoated (plain) reinforcing steel including bar supports shall be 1 1/2". Nylon, PVC, or polyethylene spacers shall be used to maintain clearance. Nylon cable ties shall be used to bind the spacers to the reinforcement.

Traffic Handling:
Traffic to be maintained on existing structure during construction. I-70 traffic to be maintained in both directions. See roadway plans for traffic control. Vertical clearance for Route I-70 traffic during construction shall be 15'-0" minimum over a 24'-0" wide horizontal opening of the roadway in each direction.

Miscellaneous:
Slab shall be cast-in-place with stay-in-place corrugated steel forms. Precast prestressed panels will not be permitted.

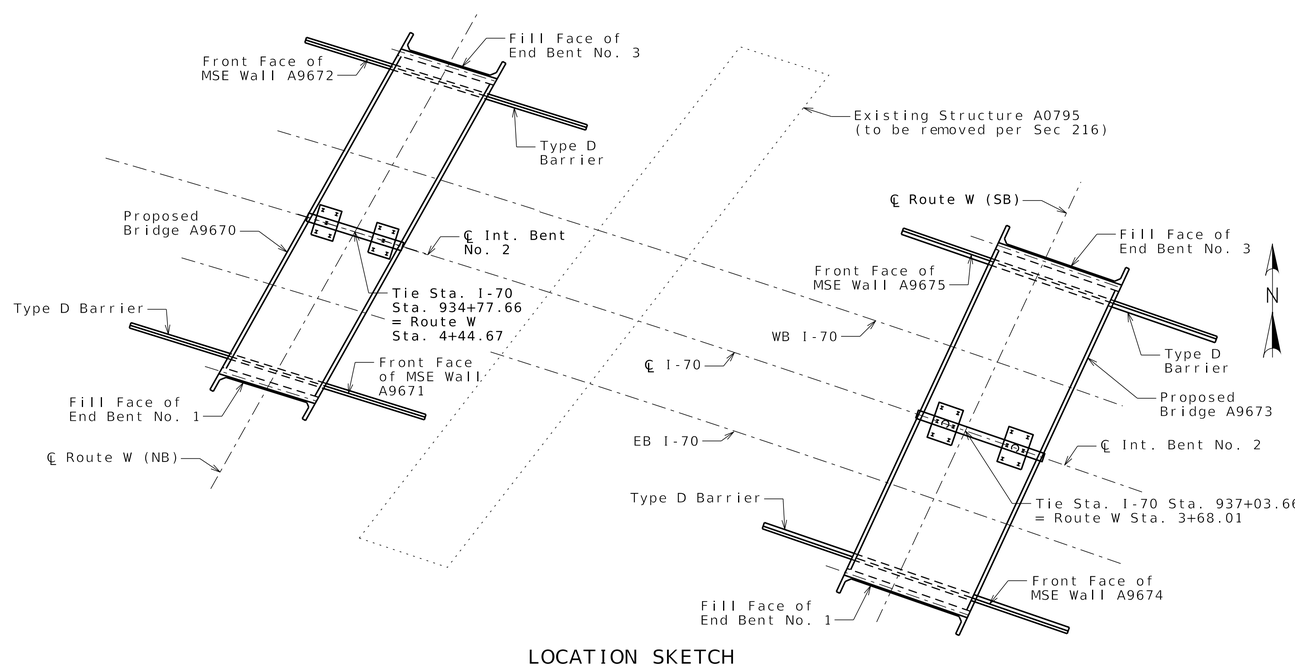

LOCATION SKETCH

Detailed Apr. 2025
Checked Apr. 2025

Note: This drawing is not to scale. Follow dimensions.

DATE PREPARED 7/2/2025
ROUTE W | STATE MO
DISTRICT BR | SHEET NO. A9670-02
COUNTY ST. CHARLES
JOB NO. JST0020
CONTRACT ID.
PROJECT NO.
BRIDGE NO. A9670

DESCRIPTION | DATE

MISSOURI HIGHWAYS AND TRANSPORTATION COMMISSION
105 WEST CAPITOL
JEFFERSON CITY, MO 65102
1-888-ASK-MODOT (1-888-275-6636)
HNTB 211 N. BROADWAY STE. 2975 ST LOUIS, MO 63102 CERTIFICATE OF AUTHORITY NO. 001270
Bartlett&West 601 MONROE ST. SUITE 201 JEFFERSON CITY, MO 65101 PHONE: 573-634-2448 CERTIFICATE OF AUTHORITY NO. 000107 - ENGINEERING WWW.BARTLETTWEST.COM

07/02/2025
Released for Construction

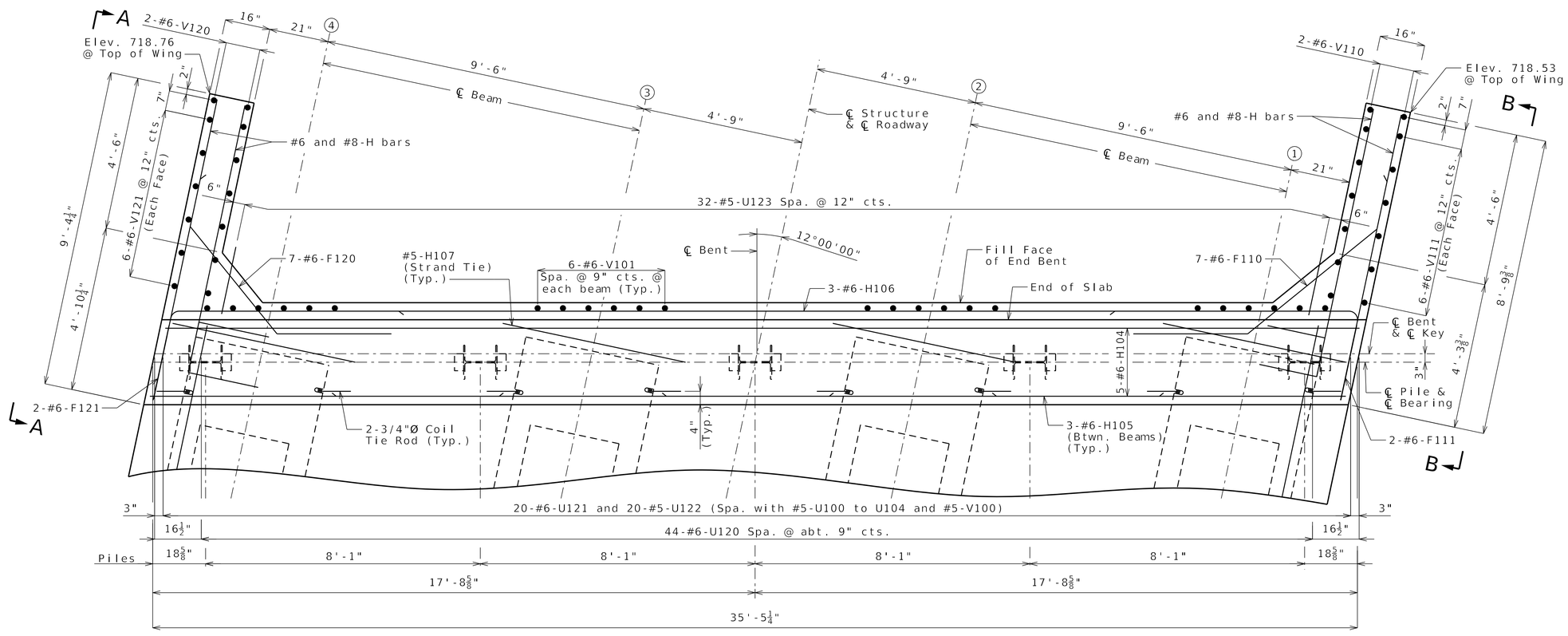

PART PLAN

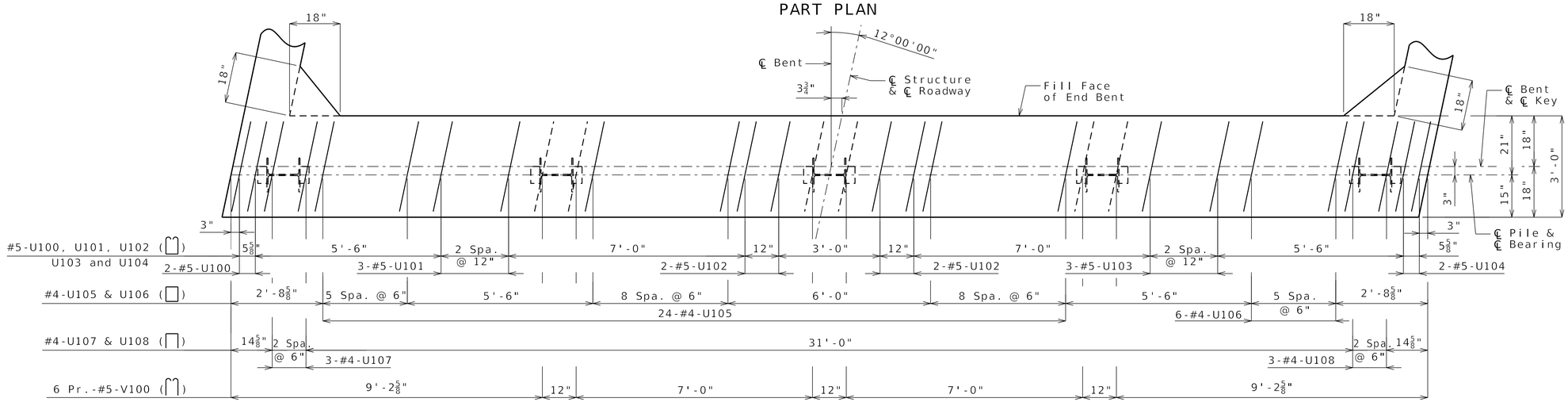

PLAN OF BEAM
(Keys not shown for clarity)

Notes:

For details at End Bent No. 1 not shown, see Sheets No. 4 and 5.

#5-U123 bar shall be used for the concrete bridge approach slab. See Sheet No. 21.

The U bars and pairs of V bars shall be placed parallel to centerline of roadway.

For location of #5-H107 (Strand Tie Bar) and Coil Tie Rods, see Sheet No. 13.

For Elevations A-A and B-B, see Sheet No. 5.

For Section Near End Bent, see Sheet No. 4.

Detailed Apr. 2025
Checked Apr. 2025

DETAILS OF END BENT NO. 1

Note: This drawing is not to scale. Follow dimensions.

Substructure Quantity Table for Bent No. 1

Item		Quantity
Dynamic Testing	each	1
Galvanized Structural Steel Pile (12 in.)	linear foot	540
Pile Point Reinforcement	each	5
Class B Concrete (Substructure)	cu. yard	14.8
Aesthetic Stain	lump sum	1
Pipe Pile Spacers	each	5

These quantities are included in the Estimated Quantities table on Sheet No. 2.

DATE PREPARED	
7/2/2025	
ROUTE: W	STATE: MO
DISTRICT: BR	SHEET NO.: A9670-03
COUNTY: ST. CHARLES	
JOB NO.: JST0020	
CONTRACT ID.	
PROJECT NO.	
BRIDGE NO.: A9670	

DESCRIPTION

DATE

MISSOURI HIGHWAYS AND TRANSPORTATION COMMISSION
105 WEST CAPITOL
JEFFERSON CITY, MO 65102
1-888-ASK-MODOT (1-888-275-6636)

IMPROVE 70 ALLIANCE

HNTB
211 N. BROADWAY STE. 2975
ST LOUIS, MO 63102
CERTIFICATE OF AUTHORITY NO. 001270

Bartlett&West
401 MONROE ST. SUITE 201 - JEFFERSON CITY, MO 65101
PHONE: 573-634-2448
CERTIFICATE OF AUTHORITY NO. 000167 - ENGINEERING
WWW.BARTLETTWEST.COM

07/02/2025
Released for Construction

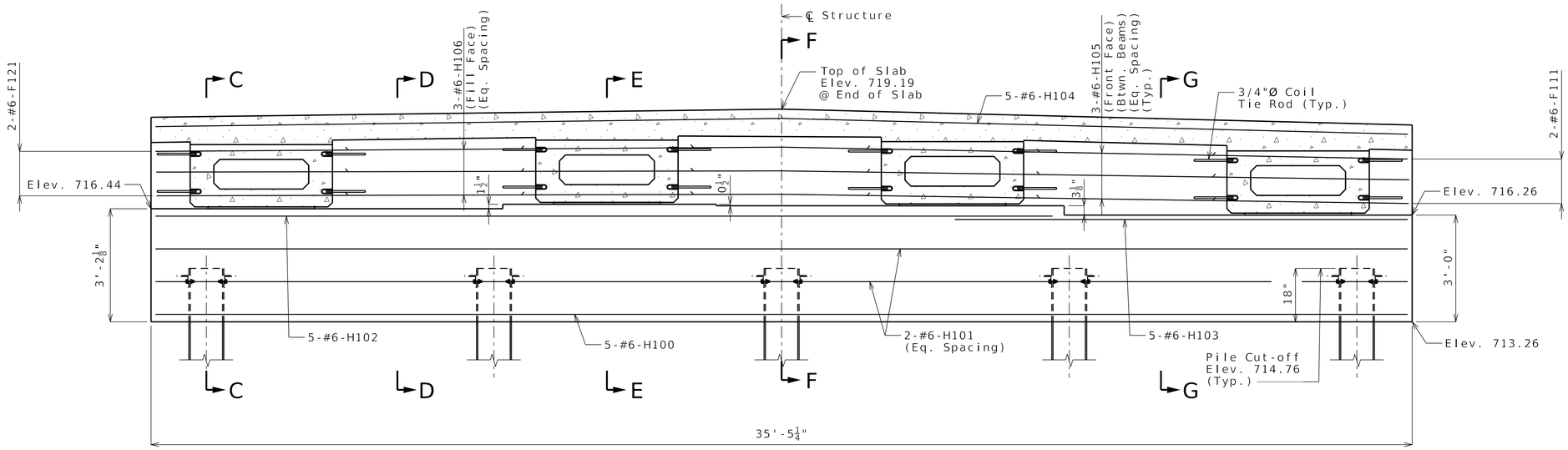

SECTION NEAR END BENT

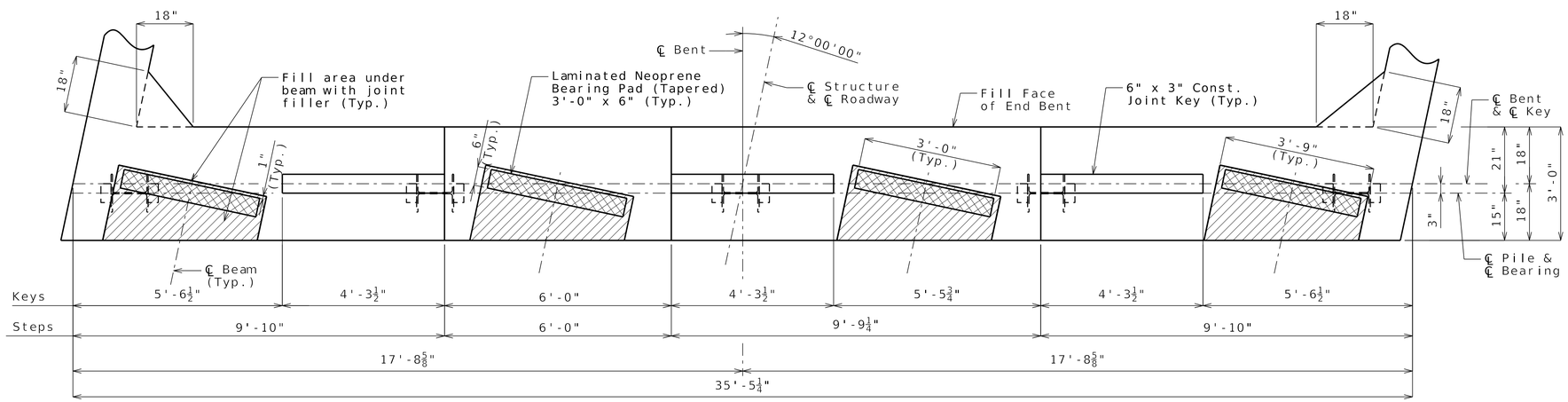

PLAN OF BEAM

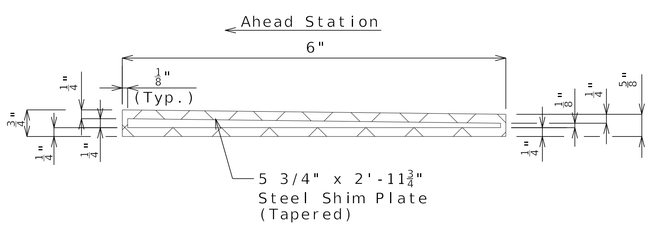

DETAILS OF 6" x 3'-0" LAMINATED NEOPRENE BEARING PADS (TAPERED)

Note: The required shim plate shall be placed between layers of elastomer and molded together to form an integral unit.

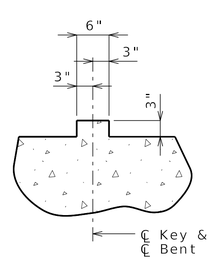

SECTION THRU KEY

DETAILS OF END BENT NO. 1

Notes:

For details of End Bent No. 1 not shown, see Sheets No. 3 and 5.

For details of barriers not shown, see Sheets No. 19 and 20.

For details of Vertical Drain at End Bents, see Sheet No. 6.

For details of Bridge Approach Slab, see Sheet No. 21.

For details of steel pile splice and pile anchors, see Sheet No. 9.

Detailed Apr. 2025
Checked Apr. 2025

Note: This drawing is not to scale. Follow dimensions.

DATE PREPARED	
7/2/2025	
ROUTE W	STATE MO
DISTRICT BR	SHEET NO. A9670-04
COUNTY ST. CHARLES	
JOB NO. JST0020	
CONTRACT ID.	
PROJECT NO.	
BRIDGE NO. A9670	

DESCRIPTION

DATE

MISSOURI HIGHWAYS AND TRANSPORTATION COMMISSION
105 WEST CAPITOL
JEFFERSON CITY, MO 65102
1-888-ASK-MODOT (1-888-275-6636)

HNTB
211 N. BROADWAY STE. 2975
ST LOUIS, MO 63102
CERTIFICATE OF AUTHORITY NO. 001210

Bartlett&West
601 MONROE ST - SUITE 201 - JEFFERSON CITY, MO 65101
PHONE: (573) 634-2448 FAX: (573) 634-8189
CERTIFICATE OF AUTHORITY NO. 000107 - ENGINEERING
WWW.BARTLETTWEST.COM

07/02/2025
Released for Construction

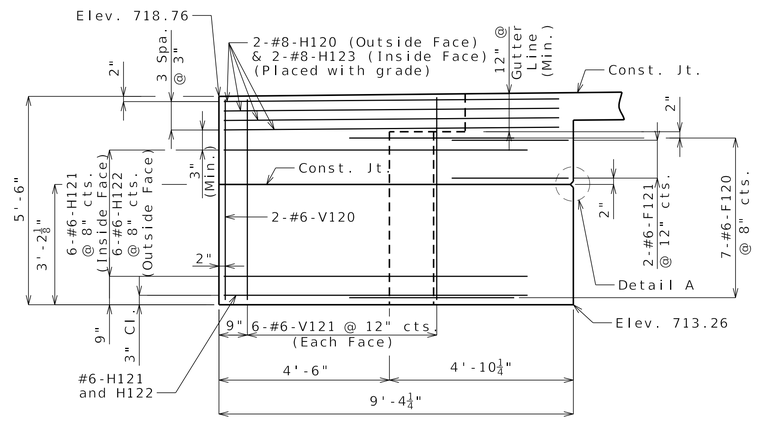

SECTION A-A

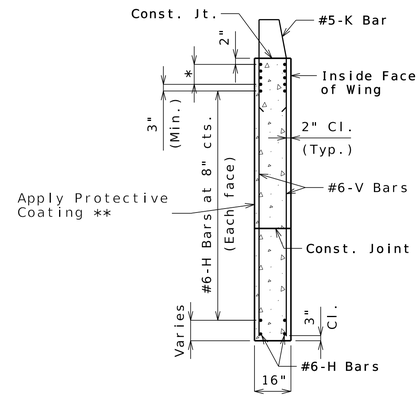

TYPICAL SECTION THRU WING

* #8-H Bars at 3" cts. (Each face)(Place with grade)

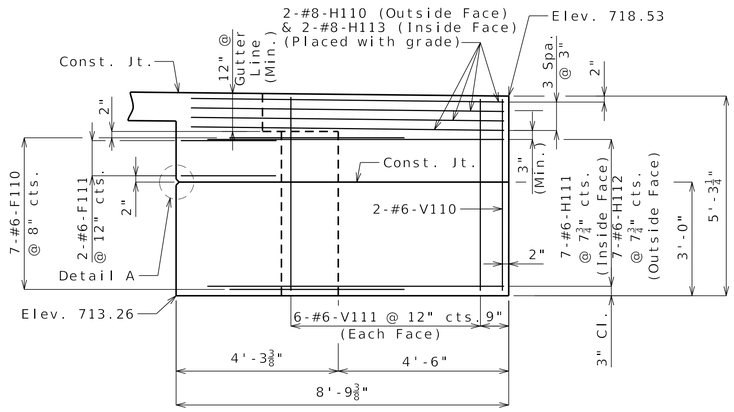

SECTION B-B

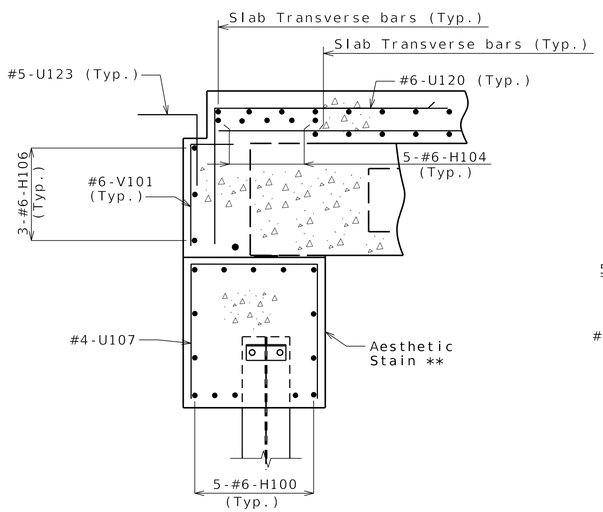

SECTION C-C

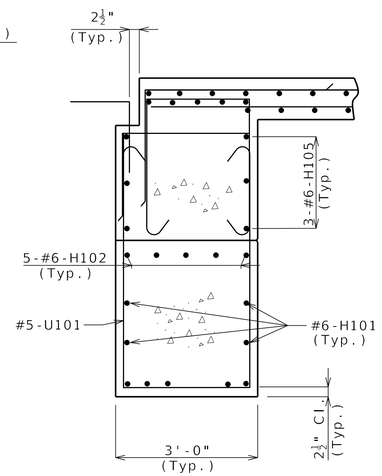

SECTION D-D

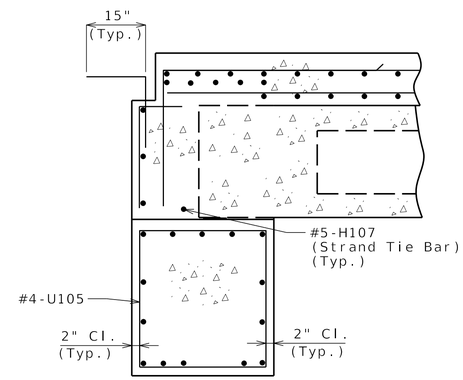

SECTION E-E

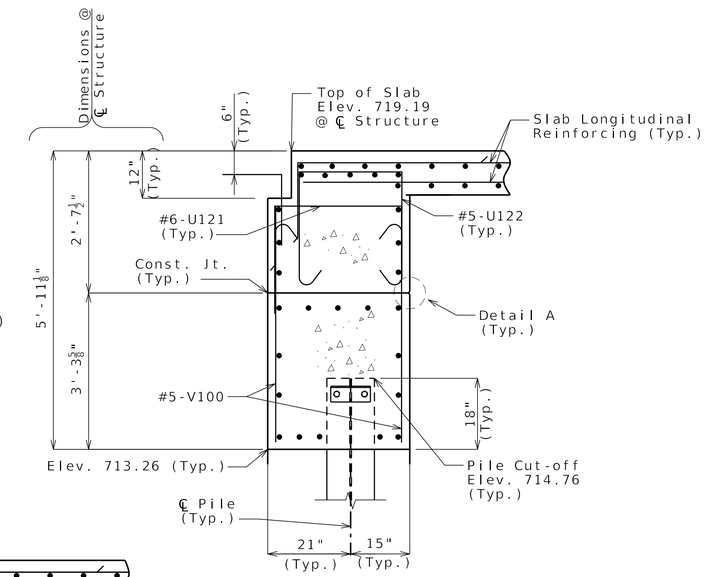

SECTION F-F

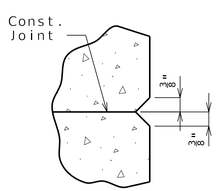

DETAIL A

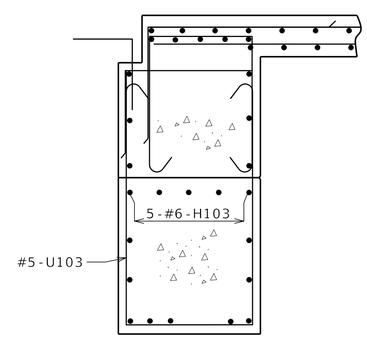

SECTION G-G

Note: For details of End Bent No. 1 not shown, see Sheets No. 3 and 4.

For details of steel pile splice and pile anchors, see Sheet No. 9.

** Apply aesthetic stain to exposed surface of beam cap and columns. See Job Special Provisions for aesthetic stain.

DETAILS OF END BENT NO. 1

Detailed Apr. 2025
Checked Apr. 2025

Note: This drawing is not to scale. Follow dimensions.

DATE PREPARED	7/2/2025
ROUTE	W
STATE	MO
DISTRICT	BR
SHEET NO.	A9670-05
COUNTY	ST. CHARLES
JOB NO.	JST0020
CONTRACT ID.	
PROJECT NO.	
BRIDGE NO.	A9670

DESCRIPTION

DATE

MISSOURI HIGHWAYS AND TRANSPORTATION COMMISSION
105 WEST CAPITOL
JEFFERSON CITY, MO 65102
1-888-ASK-MODOT (1-888-275-6636)

HNTB
211 N. BROADWAY STE. 2975
ST LOUIS, MO 63102
CERTIFICATE OF AUTHORITY NO. 001270

Bartlett&West
601 MONROE ST. SUITE 201 - JEFFERSON CITY, MO 65101
PHONE: (573) 634-2448
CERTIFICATE OF AUTHORITY NO. 000147 - ENGINEERING
WWW.BARTLETTWEST.COM

07/02/2025
Released for Construction
IMPROVE 70 ALLIANCE

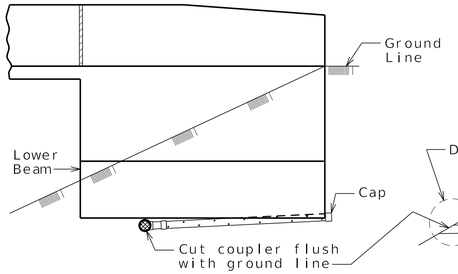

ELEVATION OF WING

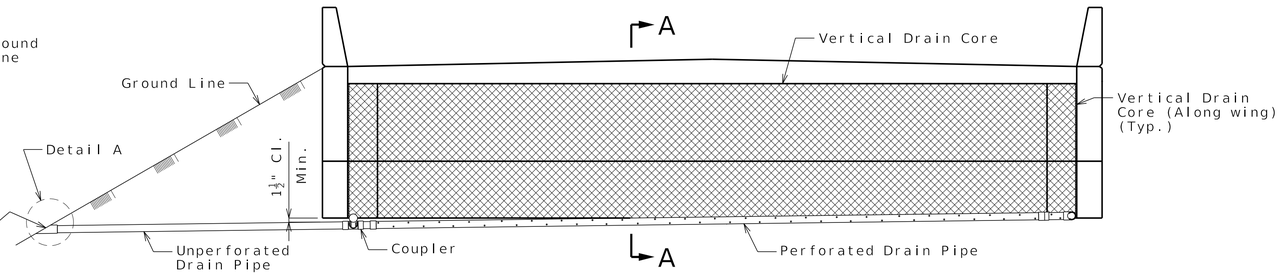

ELEVATION OF END BENT

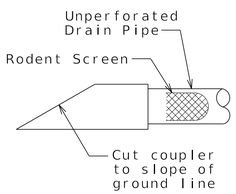

DETAIL A

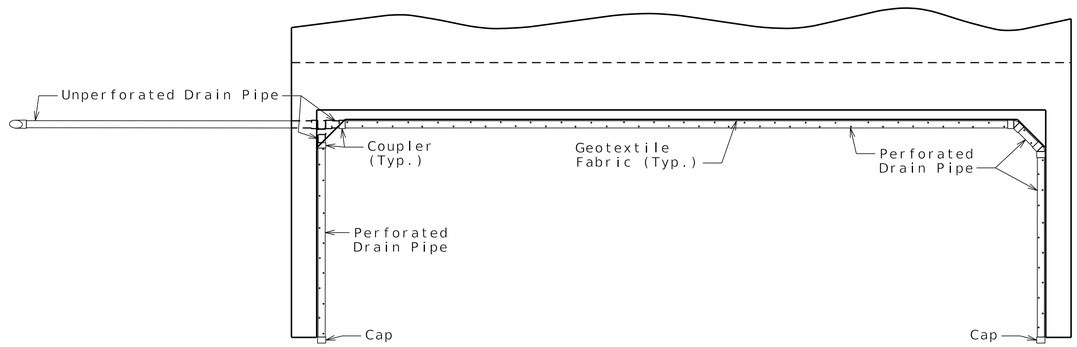

PLAN OF END BENT

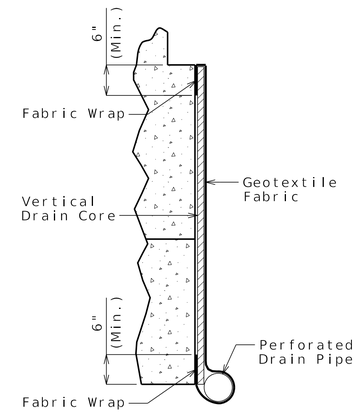

PART SECTION A-A
(Section thru wing similar)

General Notes:

All drain pipe shall be sloped 1 to 2 percent.

Drain pipe may be either 6-inch diameter corrugated metallic-coated steel pipe underdrain, 4-inch diameter corrugated polyvinyl chloride (PVC) drain pipe, or 4-inch diameter corrugated polyethylene (PE) drain pipe.

Drain pipe shall be placed at fill face of end bent and inside face of wings. The pipe shall slope to lowest grade of ground line, also missing the lower beam of end bent by a minimum of 1 1/2 inches.

Perforated pipe shall be placed at fill face side and inside face of wings at the bottom of end bent and plain pipe shall be used where the vertical drain ends to the exit at ground line.

VERTICAL DRAIN AT END BENTS

(Squared end bent shown, skewed end bent similar)

Detailed Apr. 2025
Checked Apr. 2025

Note: This drawing is not to scale. Follow dimensions.

DATE PREPARED	7/2/2025
ROUTE	W
STATE	MO
DISTRICT	BR
SHEET NO.	A9670-06
COUNTY	ST. CHARLES
JOB NO.	JST0020
CONTRACT ID.	
PROJECT NO.	
BRIDGE NO.	A9670

DESCRIPTION

DATE

MISSOURI HIGHWAYS AND TRANSPORTATION COMMISSION
105 WEST CAPITOL
JEFFERSON CITY, MO 65102
1-888-ASK-MODOT (1-888-275-6636)

IMPROVE 70 ALLIANCE

HNTB
211 N. BROADWAY STE. 2975
ST LOUIS, MO 63102
CERTIFICATE OF AUTHORITY
NO. 001270

Bartlett&West
601 MONROE ST. SUITE 201 - JEFFERSON CITY, MO 65101
PHONE: 573-893-1313
CERTIFICATE OF AUTHORITY NO. 000167 - ENGINEERING
WWW.BARTLETTWEST.COM

07/02/2025
Released for Construction

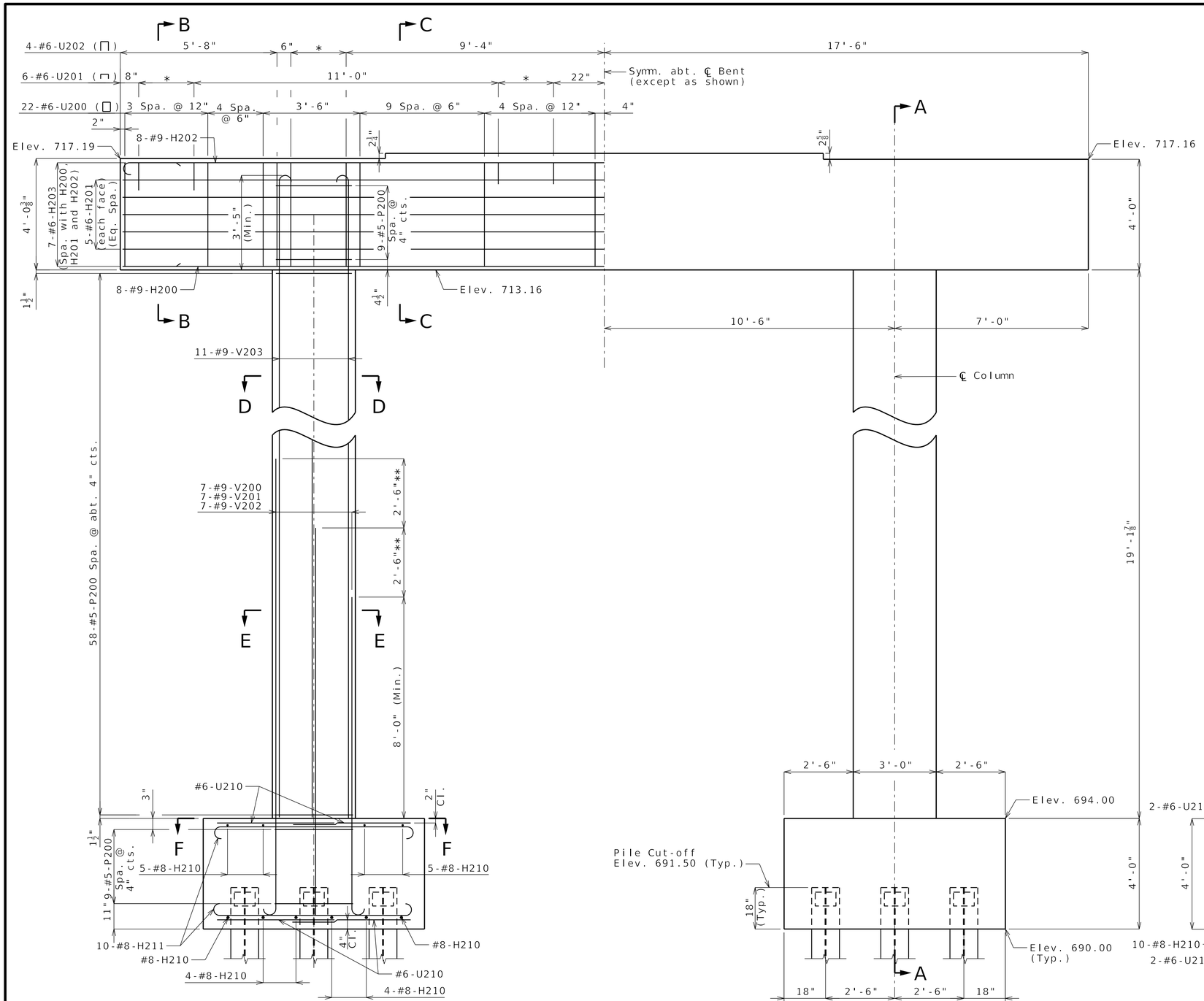

ELEVATION

Note: Key not shown for clarity.

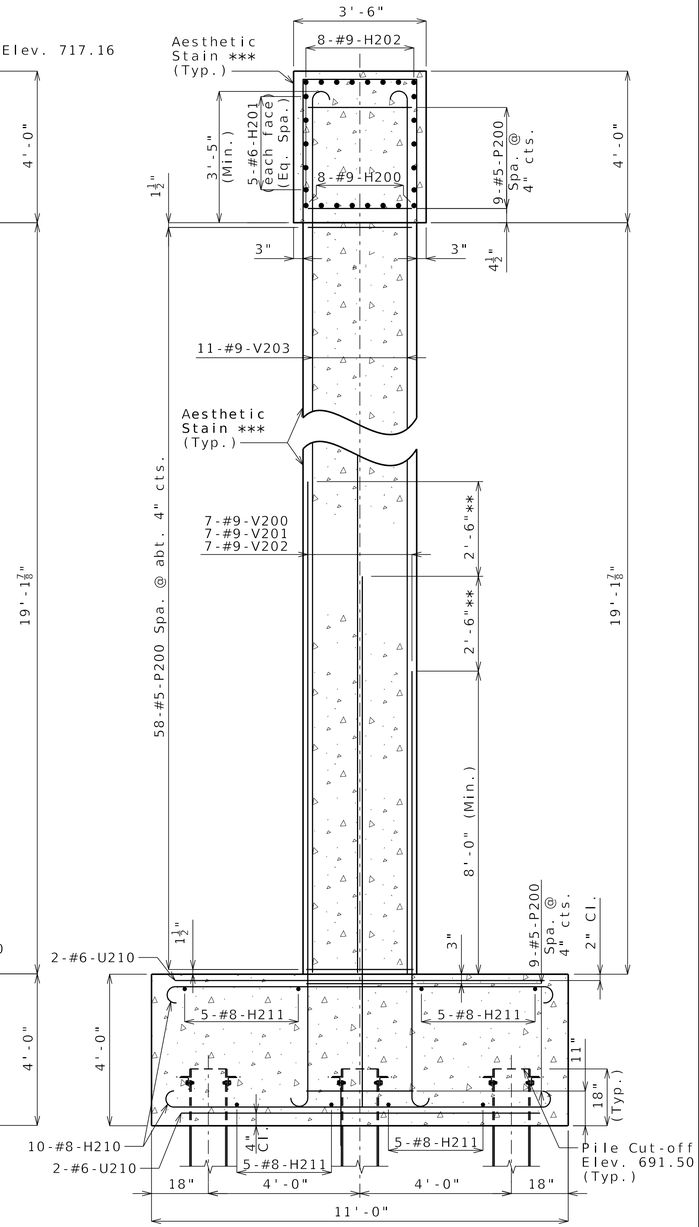

SECTION A-A

* 2 Spa. @ 12"
** Splices are to be alternately staggered at least 2'-6" at three adjacent locations (Typ.)
*** Apply aesthetic stain to exposed surface of beam cap and columns. See Job Special Provisions for aesthetic stain.

Notes:

For Sections B-B, C-C, D-D, E-E and F-F, see Sheet No. 9.

Work this sheet with Sheets No. 8 and 9.

The hook of vertical bars embedded in the beam cap shall not be turned outward, away from the column core.

DETAILS OF INTERMEDIATE BENT NO. 2

Note: This drawing is not to scale. Follow dimensions.

Detailed Apr. 2025
Checked Apr. 2025

DATE PREPARED	
7/2/2025	
ROUTE W	STATE MO
DISTRICT BR	SHEET NO. A9670-07
COUNTY ST. CHARLES	
JOB NO. JST0020	
CONTRACT ID.	
PROJECT NO.	
BRIDGE NO. A9670	

DESCRIPTION

DATE

MISSOURI HIGHWAYS AND TRANSPORTATION COMMISSION
105 WEST CAPITOL
JEFFERSON CITY, MO 65102
1-888-ASK-MODOT (1-888-275-6636)

HNTB
211 N. BROADWAY STE. 2975
ST LOUIS, MO 63102
CERTIFICATE OF AUTHORITY NO. 001210

Bartlett&West
601 MONROE ST. SUITE 201 - JEFFERSON CITY, MO 65101
PHONE: (573) 634-2448 FAX: (573) 634-2488
CERTIFICATE OF AUTHORITY NO. 000107 - ENGINEERING
WWW.BARTLETTWEST.COM

07/02/2025
Released for Construction

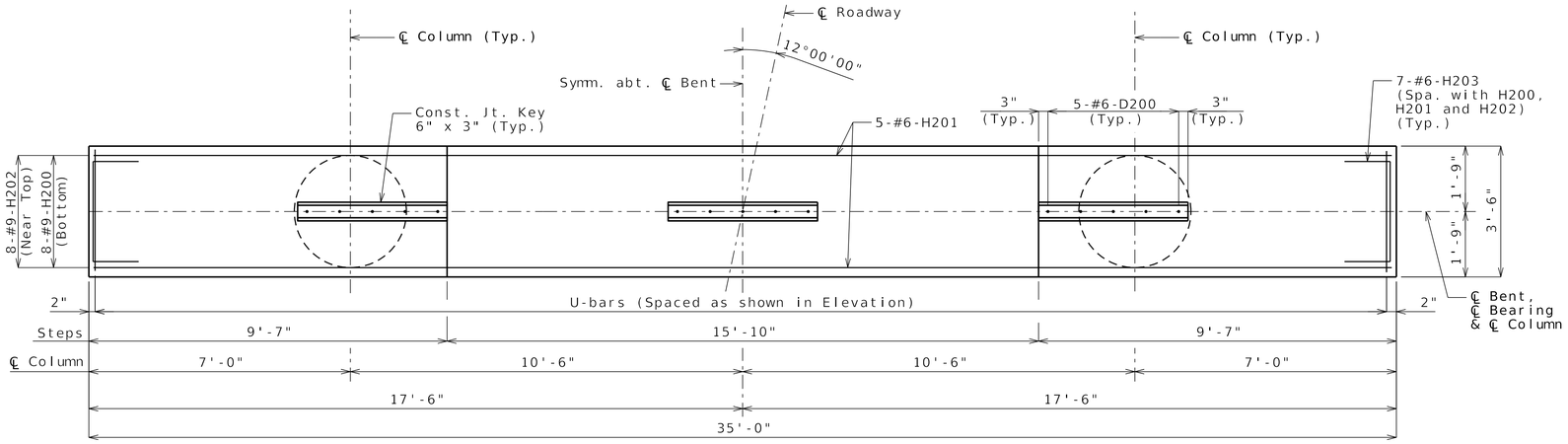

PLAN OF BEAM SHOWING REINFORCEMENT

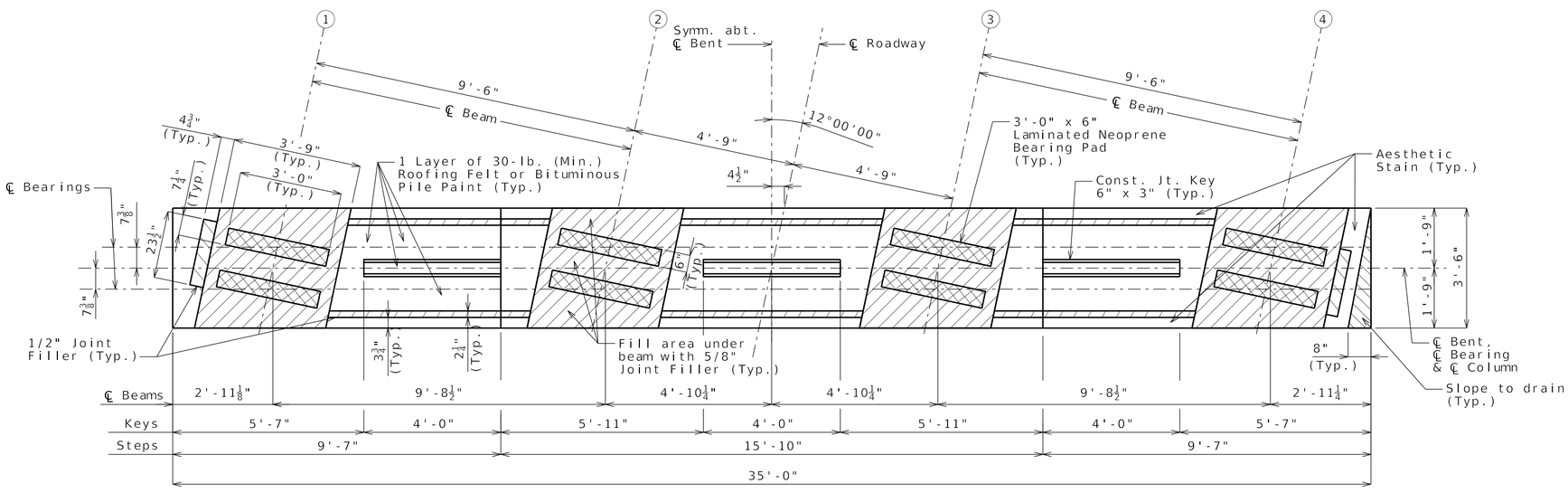

PLAN OF BEAM

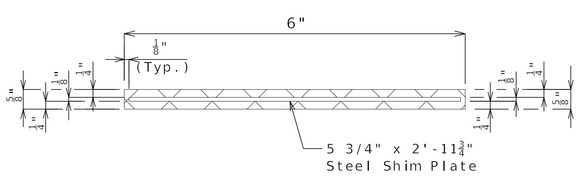

DETAILS OF 6" x 3'-0" LAMINATED NEOPRENE BEARING PADS

Note: The required shim plate shall be placed between layers of elastomer and molded together to form an integral unit.

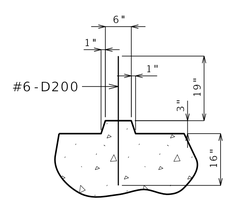

SECTION THRU KEY

Substructure Quantity Table for Bent No. 2

Item		Quantity
Dynamic Pile Testing	each	1
Galvanized Structural Steel Pile (12 in.)	linear foot	840
Pile Point Reinforcement	each	10
Class B Concrete (Substructure)	cu. yard	55.0
Reinforcing Steel (Bridges)	pound	2,594
Reinforcing Steel (Epoxy Coated)	pound	9,340
Aesthetic Stain	lump sum	1

Notes:
These quantities are included in the Estimated Quantities table on Sheet No. 2.

For Elevation, see Sheet No. 7.

For details of Int. Bent No. 2 not shown, see Sheet No. 7 and 9.

For steps 2 inches or more, use 2 1/4 x 1/2 inch joint filler up vertical face.

DETAILS OF INTERMEDIATE BENT NO. 2

Note: This drawing is not to scale. Follow dimensions.

Detailed Apr. 2025
Checked Apr. 2025

DATE PREPARED	7/2/2025
ROUTE	W
STATE	MO
DISTRICT	BR
SHEET NO.	A9670-08
COUNTY	ST. CHARLES
JOB NO.	JST0020
CONTRACT ID.	
PROJECT NO.	
BRIDGE NO.	A9670

DESCRIPTION

DATE

MISSOURI HIGHWAYS AND TRANSPORTATION COMMISSION
105 WEST CAPITOL
JEFFERSON CITY, MO 65102
1-888-ASK-MODOT (1-888-275-6636)

HNTB
211 N. BROADWAY STE. 2975
ST LOUIS, MO 63102
CERTIFICATE OF AUTHORITY
NO. 001210

Bartlett&West
601 MONROE ST. SUITE 201 - JEFFERSON CITY, MO 65101
CERTIFICATE OF AUTHORITY NO. 000107 - ENGINEERING
CERTIFICATE OF AUTHORITY NO. 000107 - ENGINEERING
WWW.BARTLETTWEST.COM

07/02/2025
Released for Construction

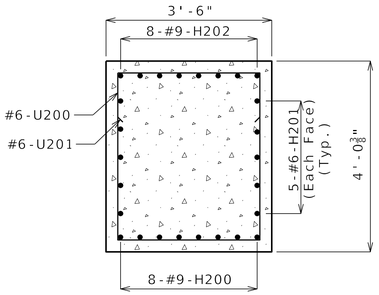

SECTION B-B

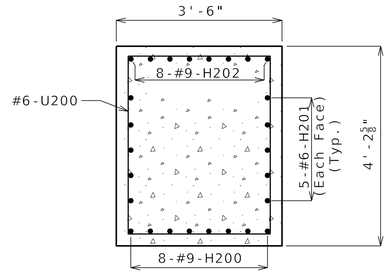

SECTION C-C

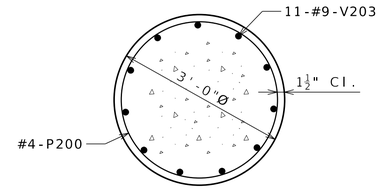

SECTION D-D

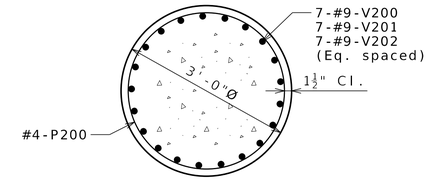

SECTION E-E
Note: V203 bars not shown for clarity.

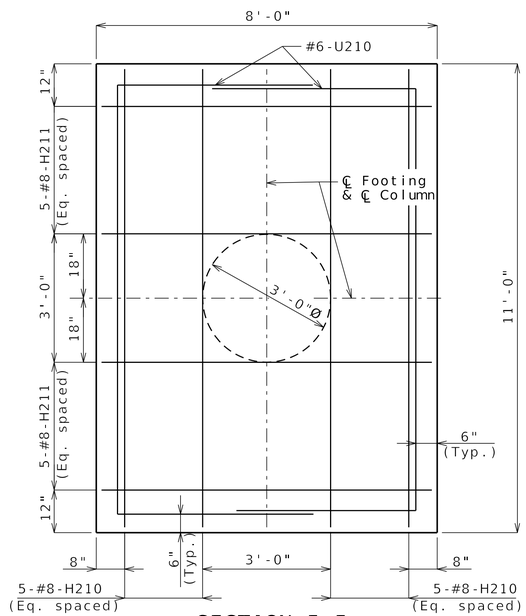

SECTION F-F
(Top Reinforcement)

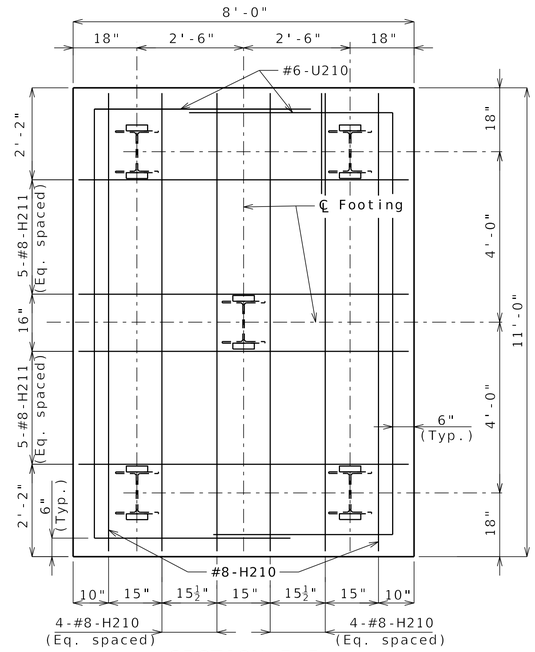

SECTION F-F
(Bottom Reinforcement)

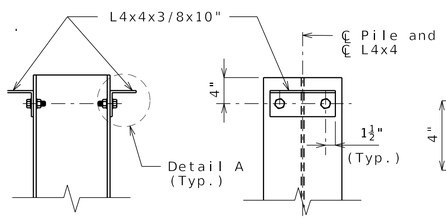

DETAILS OF HP PILE ANCHORS

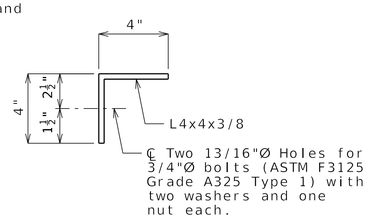

DETAIL A

Angles shall be coated with a minimum of two coats of non-aluminum epoxy mastic primer to provide a dry film thickness of 4 mils minimum, 8 mils maximum, or galvanized in accordance with Sec 1081. Bolts, washers and nuts shall be galvanized in accordance with AASHTO M 232 (ASTM A153), Class C.

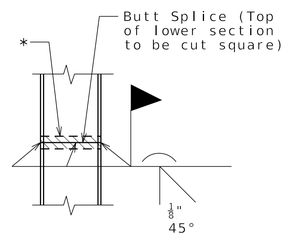

STEEL PILE SPLICE
(If required)

* Galvanizing material shall be omitted or removed one inch clear of weld locations in accordance with Sec 702.

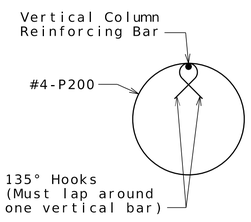

SEISMIC STIRRUP BAR
Note: Seismic stirrups hooks shall be staggered around the column at about one-third of the hoop circumference.

Notes:

Work this sheet with Sheets No. 7 and 8.

Reinforcing steel in the footing shall be shifted to clear piles by at least 1 1/2".

DETAILS OF INTERMEDIATE BENT NO. 2

Detailed Apr. 2025
Checked Apr. 2025

Note: This drawing is not to scale. Follow dimensions.

DATE PREPARED	7/2/2025
ROUTE	W
STATE	MO
DISTRICT	BR
SHEET NO.	A9670-09
COUNTY	ST. CHARLES
JOB NO.	JST0020
CONTRACT ID.	
PROJECT NO.	
BRIDGE NO.	A9670

DESCRIPTION

DATE

MISSOURI HIGHWAYS AND TRANSPORTATION COMMISSION
105 WEST CAPITOL
JEFFERSON CITY, MO 65102
1-888-ASK-MODOT (1-888-275-6636)

HNTB
211 N. BROADWAY STE. 2975
ST LOUIS, MO 63102
CERTIFICATE OF AUTHORITY NO. 001270

Bartlett&West
401 MONROE ST. SUITE 201 - JEFFERSON CITY, MO 65101
PHONE: (573) 634-2448
CERTIFICATE OF AUTHORITY NO. 000167 - ENGINEERING
WWW.BARTLETTWEST.COM

07/02/2025
Released for Construction
IMPROVE 70 ALLIANCE

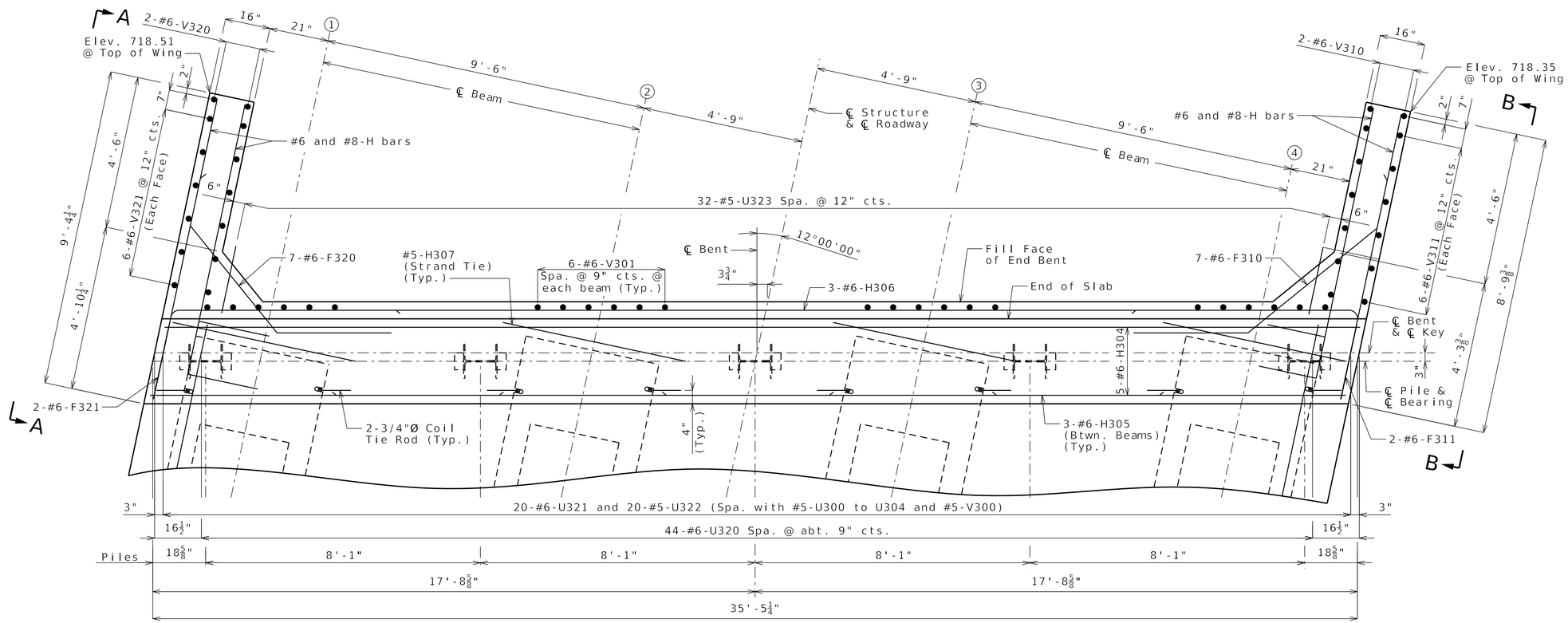

PART PLAN

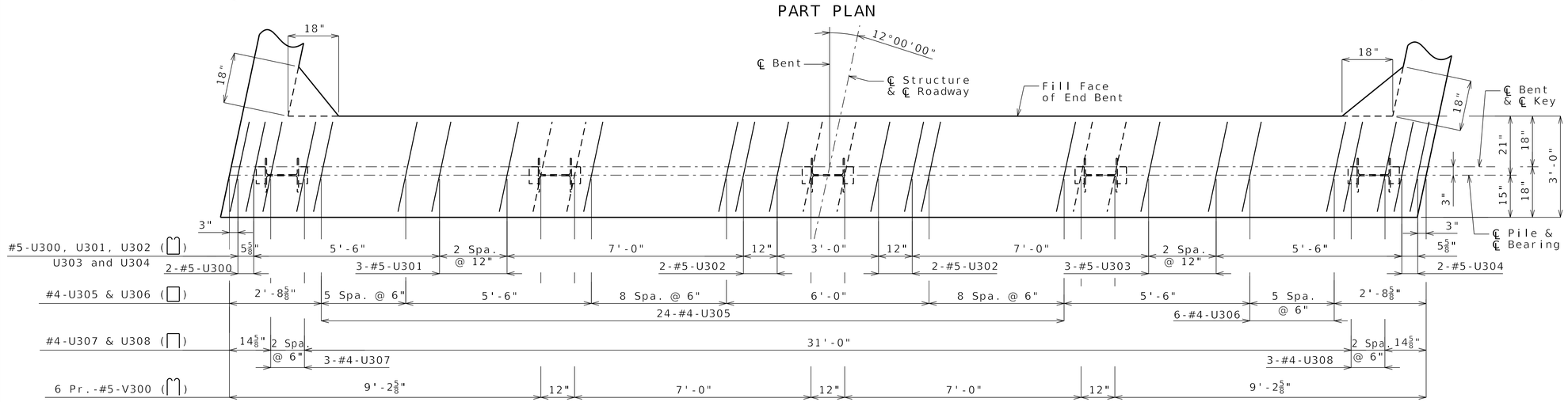

PLAN OF BEAM
(Keys not shown for clarity)

Notes:

For details at End Bent No. 3 not shown, see Sheets No. 11 and 12.

#5-U323 bar shall be used for the concrete bridge approach slab. See Sheet No. 22.

For Elevations A-A and B-B, see Sheet No. 12.

For Section Near End Bent, see Sheet No. 11.

The U bars and pairs of V bars shall be placed parallel to centerline of roadway.

Detailed Apr. 2025
Checked Apr. 2025

DETAILS OF END BENT NO. 3

Note: This drawing is not to scale. Follow dimensions.

Substructure Quantity Table for Bent No. 3

Item		Quantity
Dynamic Testing	each	1
Galvanized Structural Steel Pile (12 in.)	linear foot	490
Pile Point Reinforcement	each	5
Class B Concrete (Substructure)	cu. yard	14.8
Aesthetic Stain	lump sum	1
Pipe Pile Spacers	each	5

These quantities are included in the Estimated Quantities table on Sheet No. 2.

DATE PREPARED	
7/2/2025	
ROUTE: W	STATE: MO
DISTRICT: BR	SHEET NO.: A9670-10
COUNTY: ST. CHARLES	
JOB NO.: JST0020	
CONTRACT ID.	
PROJECT NO.	
BRIDGE NO.: A9670	

DESCRIPTION

DATE

MISSOURI HIGHWAYS AND TRANSPORTATION COMMISSION
105 WEST CAPITOL
JEFFERSON CITY, MO 65102
1-888-ASK-MODOT (1-888-275-6636)

IMPROVE 70 ALLIANCE

HNTB
211 N. BROADWAY STE. 2975
ST LOUIS, MO 63102
CERTIFICATE OF AUTHORITY NO. 001270

Bartlett&West
601 MONROE ST. SUITE 201 - JEFFERSON CITY, MO 65101
(573) 635-7228 FAX (573) 635-2724
CERTIFICATE OF AUTHORITY NO. 000107 - ENGINEERING
WWW.BARTLETTWEST.COM

07/02/2025
Released for Construction

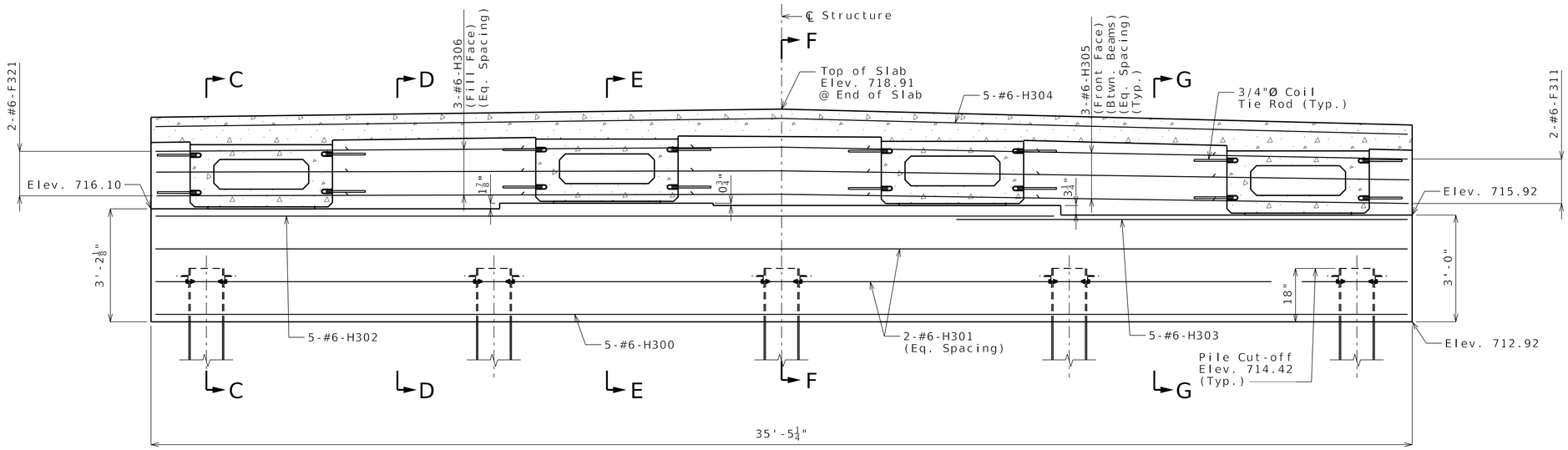

SECTION NEAR END BENT

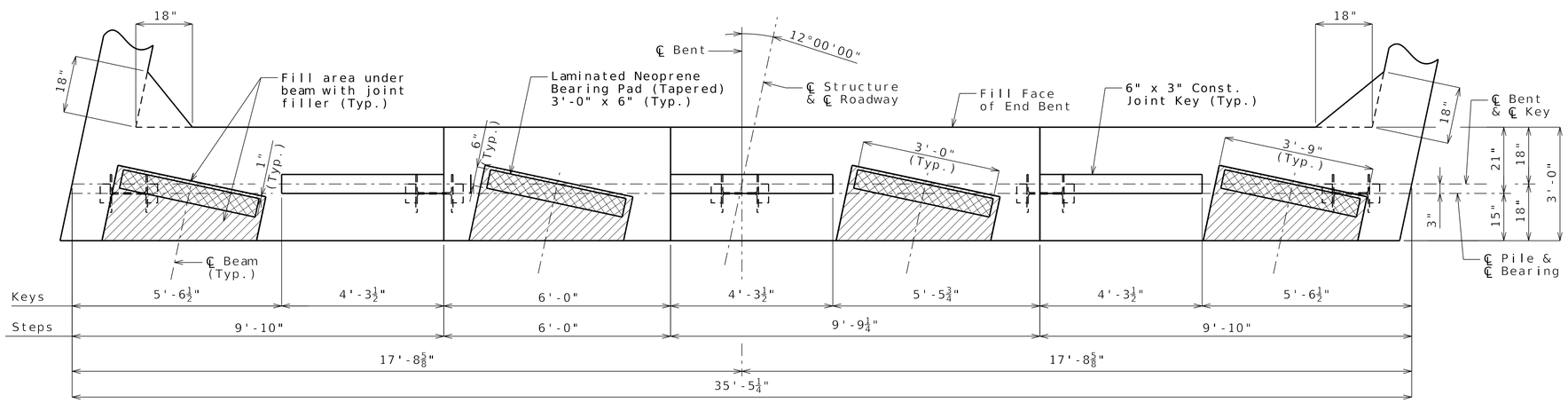

PLAN OF BEAM

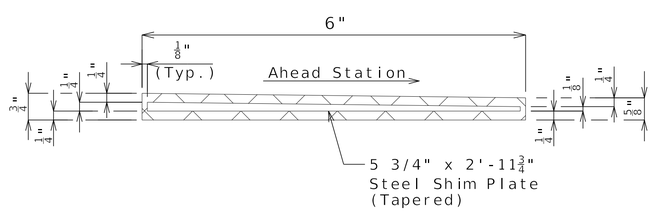

DETAILS OF 6" x 3'-0" LAMINATED NEOPRENE BEARING PADS (TAPERED)

Note: The required shim plate shall be placed between layers of elastomer and molded together to form an integral unit.

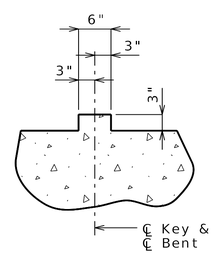

SECTION THRU KEY

DETAILS OF END BENT NO. 3

Notes:

For details of End Bent No. 3 not shown, see Sheets No. 10 and 12.

For details of barriers not shown, see Sheets No. 20 and 21.

For details of Vertical Drain at End Bents, see Sheet No. 6.

For details of Bridge Approach Slab, see Sheet No. 22.

For details of steel pile splice and pile anchors, see Sheet No. 9.

For location of #5-H307 (Strand Tie Bar) and Coil Tie Rods, see Sheet No. 14.

Detailed Apr. 2025
Checked Apr. 2025

Note: This drawing is not to scale. Follow dimensions.

DATE PREPARED	7/2/2025
ROUTE	W
STATE	MO
DISTRICT	BR
SHEET NO.	A9670-11
COUNTY	ST. CHARLES
JOB NO.	JST0020
CONTRACT ID.	
PROJECT NO.	
BRIDGE NO.	A9670

DESCRIPTION

DATE

MISSOURI HIGHWAYS AND TRANSPORTATION COMMISSION
105 WEST CAPITOL
JEFFERSON CITY, MO 65102
1-888-ASK-MODOT (1-888-275-6636)

HNTB
211 N. BROADWAY STE. 2975
ST LOUIS, MO 63102
CERTIFICATE OF AUTHORITY NO. 001270

Bartlett&West
601 MONROE ST. SUITE 201, JEFFERSON CITY, MO 65101
(573) 634-2448 FAX (573) 634-8487
CERTIFICATE OF AUTHORITY NO. 000107 - ENGINEERING
BWWEARETELLTHETRUTH.COM

07/02/2025
Released for Construction

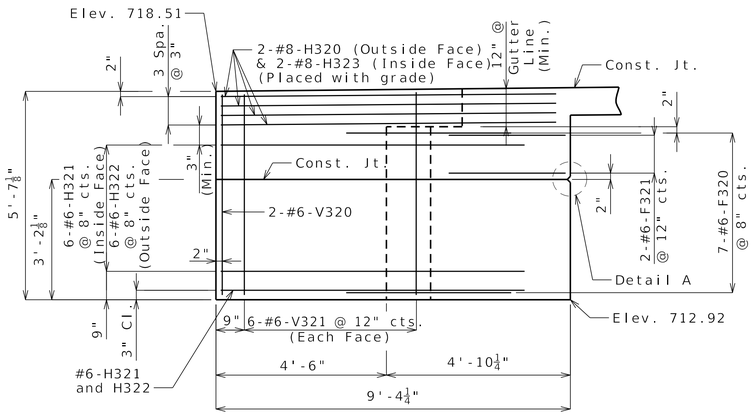

SECTION A-A

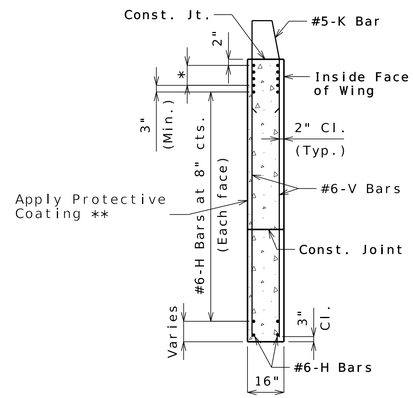

TYPICAL SECTION THRU WING

* #8-H Bars at 3" cts. (Each face)(Place with grade)

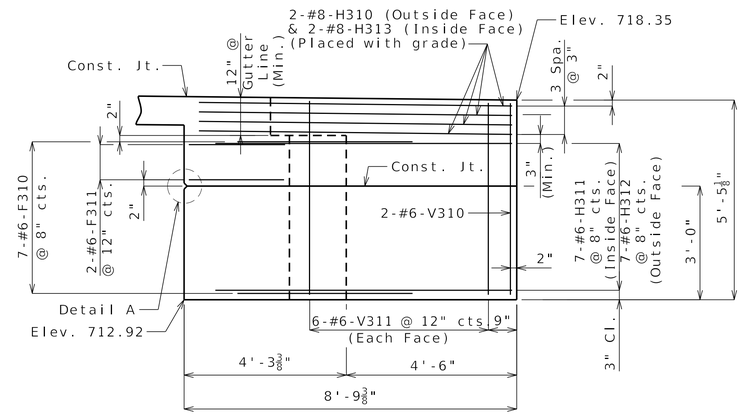

SECTION B-B

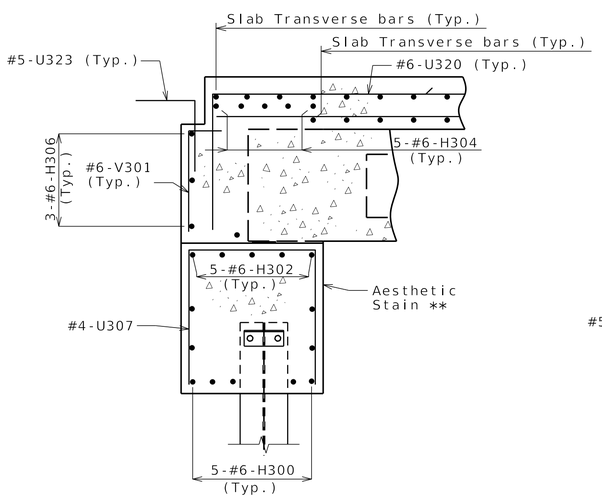

SECTION C-C

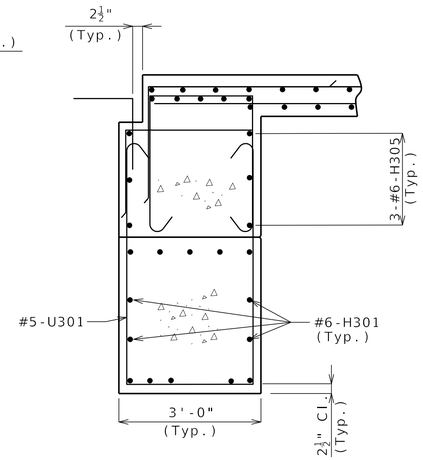

SECTION D-D

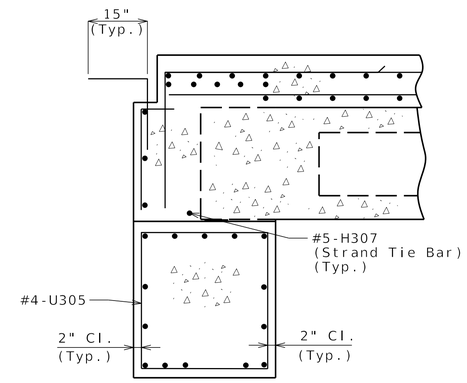

SECTION E-E

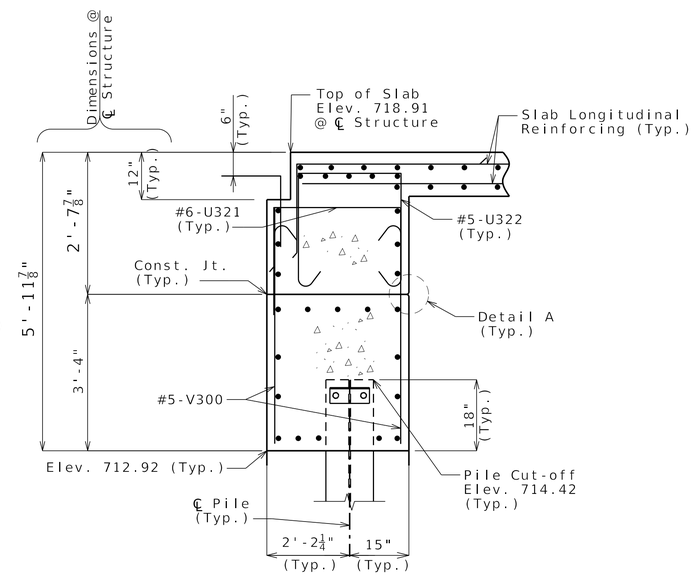

SECTION F-F

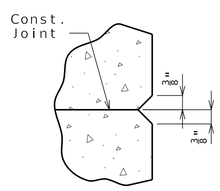

DETAIL A

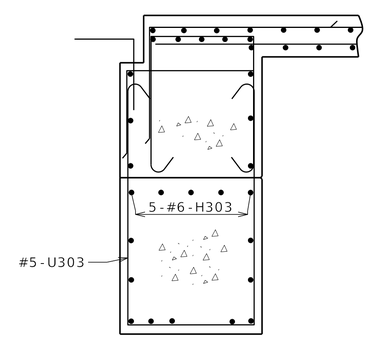

SECTION G-G

Notes:

For details of End Bent No. 3 not shown, see Sheets No. 10 and 11.

For details of steel pile splice and pile anchors, see Sheet No. 9.

** Apply aesthetic stain to exposed surface of beam cap and columns. See Job Special Provisions for aesthetic stain.

DETAILS OF END BENT NO. 3

Detailed Apr. 2025
Checked Apr. 2025

Note: This drawing is not to scale. Follow dimensions.

DATE PREPARED	
7/2/2025	
ROUTE W	STATE MO
DISTRICT BR	SHEET NO. A9670-12
COUNTY ST. CHARLES	
JOB NO. JST0020	
CONTRACT ID.	
PROJECT NO.	
BRIDGE NO. A9670	

DESCRIPTION | DATE

MISSOURI HIGHWAYS AND TRANSPORTATION COMMISSION
105 WEST CAPITOL
JEFFERSON CITY, MO 65102
1-888-ASK-MODOT (1-888-275-6636)

HNTB
211 N. BROADWAY STE. 2975
ST LOUIS, MO 63102
CERTIFICATE OF AUTHORITY NO. 001270

Bartlett & West
601 MONROE ST. SUITE 201 - JEFFERSON CITY, MO 65101
(573) 634-2448 FAX (573) 634-8291
CERTIFICATE OF AUTHORITY NO. 000107 - ENGINEERING
WWW.BARTLETTWEST.COM

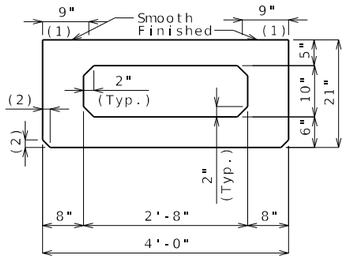

DIMENSIONS

(1) Fabricator shall apply a bond breaker to this region.

(2) $1\frac{1}{2}$" (Typ.) ($\frac{3}{4}$" Optional)

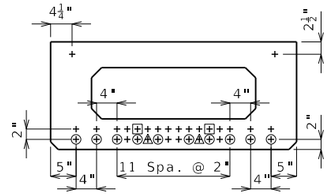

STRAND ARRANGEMENT

All strands are fully bonded unless otherwise noted.

+ Indicates prestressing strand.

○ Indicates cut and shop bend with 2'-0" projection.

□ Indicates debonded for 2'-0" from end of beam.

△ Indicates debonded for 2'-0" from end of beam.

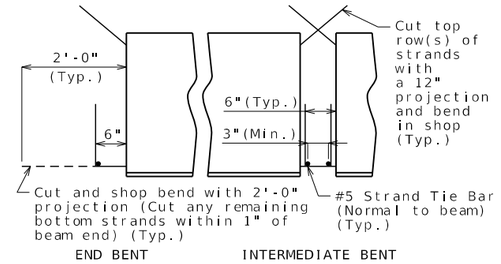

STRANDS AT BEAM ENDS

BILL OF REINFORCING STEEL - EACH BEAM			
NO.	SIZE & MARK	ACTUAL LENGTH	SHAPE
10	5 A1	32'-3"	20
8	4 A2	32'-0"	20
19	4 C1	3'-7"	20
64	5 S1	7'-3"	10S
64	5 S2	6'-9"	51S
64	4 S3	4'-6"	50S
18	5 S4	7'-3"	10S
18	5 S5	6'-4"	10S
12	6 U1	4'-7"	10S
8	5 U2	7'-4"	10S

BENDING DIAGRAM

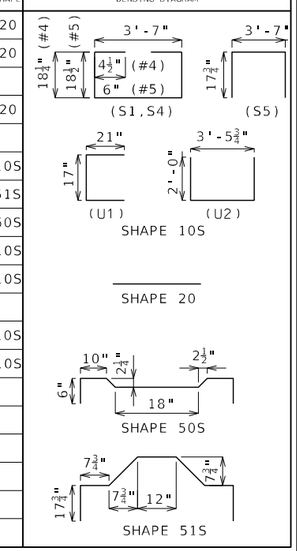

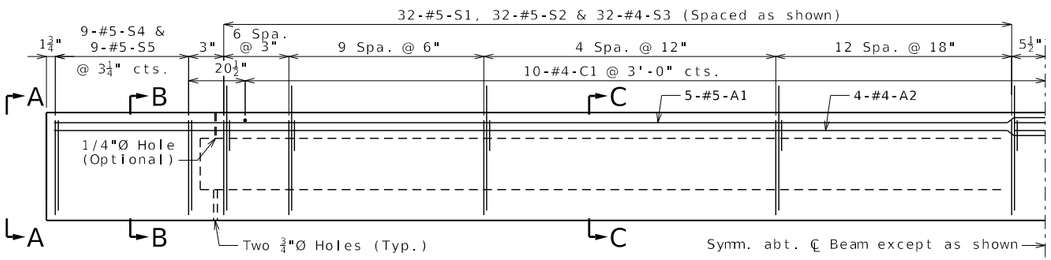

HALF ELEVATION

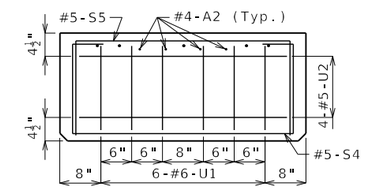

ELEVATION A-A

Strands not shown for clarity.

All dimensions are out to out. Use symmetry for dimensions not shown.

Hooks and bends shall be in accordance with the CRSI Manual of Standard Practice for Detailing Reinforced Concrete Structures, Stirrup and Tie Dimensions.

Actual lengths are measured along centerline of bar to the nearest inch.

Minimum clearance to reinforcing shall be one inch, unless otherwise shown.

All reinforcement shall be Grade 60.

All S2 bars shall be epoxy coated.

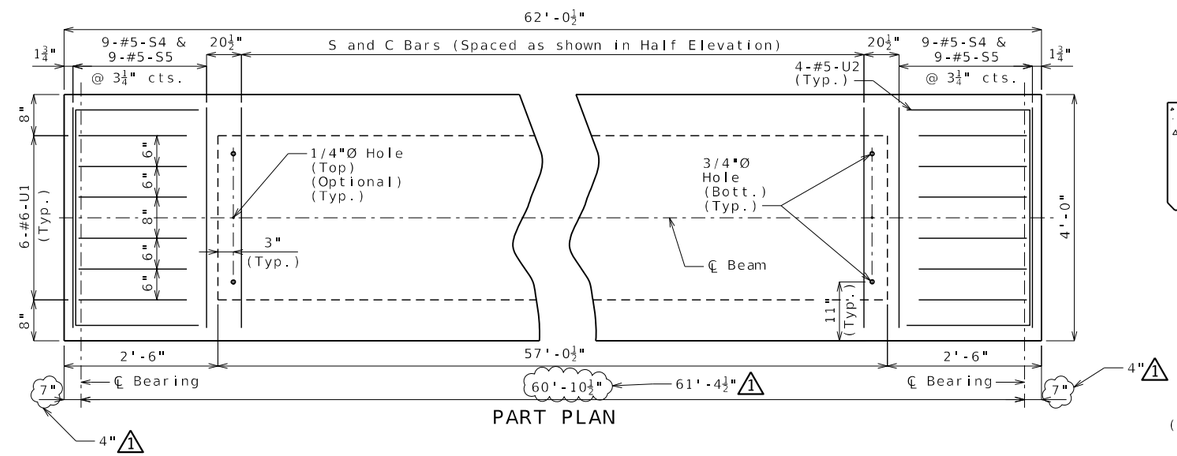

PART PLAN

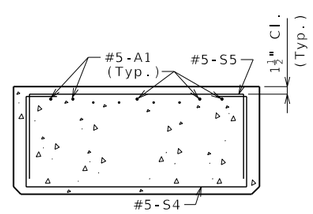

SECTION B-B

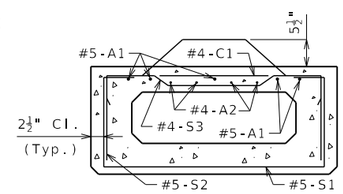

SECTION C-C

General Notes:

Concrete for prestressed beams shall be Class A-1 with f'c = 9,500 psi and f'ci = 7,500 psi.

Use 34 strands, 0.6"Ø Grade 270, with an initial prestress force of 1,494 kips.

Pretensioned members shall be in accordance with Sec 1029.

Fabricator shall be responsible for location and design of lifting devices.

Exterior and interior beams are the same except: coil ties, application of bond breaker.

For Beam Camber Diagram, see Sheet No. 16.

For location of coil ties at concrete bent diaphragms, see Sheets No. 3 and 15.

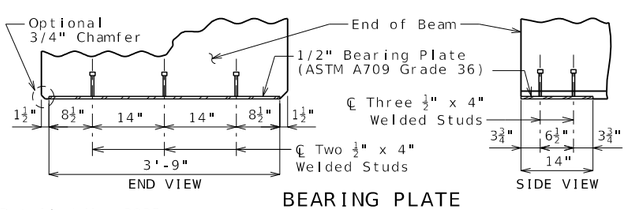

BEARING PLATE

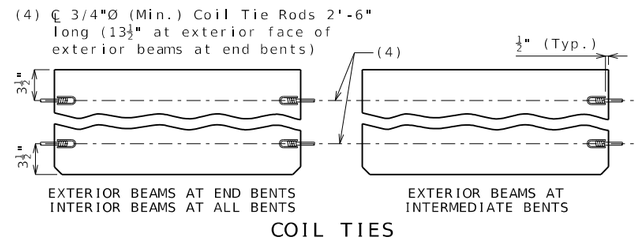

COIL TIES

SPREAD BOX BEAMS - SPAN (1-2)

Detailed May 2025
Checked May 2025

Note: This drawing is not to scale. Follow dimensions.

STATE OF MISSOURI
ANOUSONE AROUNPRADITH
NUMBER PE-29317
PROFESSIONAL ENGINEER
THIS SHEET HAS BEEN SIGNED, SEALED AND DATED ELECTRONICALLY.

DATE PREPARED 7/17/2025
ROUTE W | STATE MO
DISTRICT BR | SHEET NO. A9670-13
COUNTY ST. CHARLES
JOB NO. JST0020
CONTRACT ID.
PROJECT NO.
BRIDGE NO. A9670

DATE	DESCRIPTION
07/17/25	NDC0017 REVISED PS BEAM DIMENSION

MISSOURI HIGHWAYS AND TRANSPORTATION COMMISSION
105 WEST CAPITOL
JEFFERSON CITY, MO 65102
1-888-ASK-MODOT (1-888-275-6636)

IMPROVE 70 ALLIANCE

HNTB
211 N. BROADWAY STE. 2975
ST LOUIS, MO 63102
CERTIFICATE OF AUTHORITY NO. 001270

Bartlett & West
601 MONROE ST., SUITE 201 - JEFFERSON CITY, MO 65101
PHONE: 573-635-7627 FAX: 573-635-7628
CERTIFICATE OF AUTHORITY NO. 000107 - ENGINEERING
WWW.BARTLETTWEST.COM

REV.

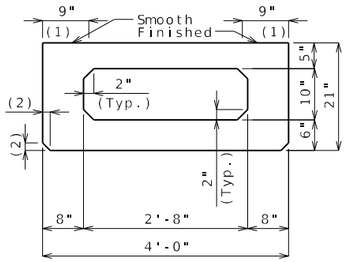

DIMENSIONS

(1) Fabricator shall apply a bond breaker to this region.

(2) $1\frac{1}{2}$" (Typ.) ($\frac{3}{4}$" Optional)

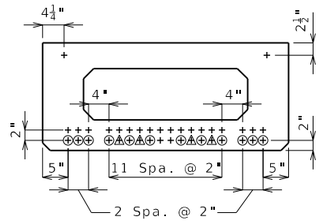

STRAND ARRANGEMENT

All strands are fully bonded unless otherwise noted.

+ Indicates prestressing strand.

○ Indicates cut and shop bend with 2'-0" projection.

Δ Indicates debonded for 2'-0" from end of beam.

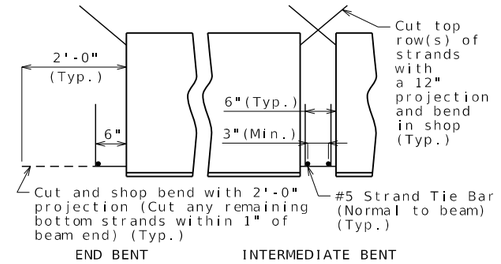

STRANDS AT BEAM ENDS

BILL OF REINFORCING STEEL - EACH BEAM			
NO.	SIZE & MARK	ACTUAL LENGTH	SHAPE
10	5 A1	34'-7"	20
8	4 A2	34'-4"	20
21	4 C1	3'-7"	20
56	5 S1	7'-3"	10S
56	5 S2	6'-9"	51S
56	4 S3	4'-6"	50S
18	5 S4	7'-3"	10S
18	5 S5	6'-4"	10S
12	6 U1	4'-7"	10S
8	5 U2	7'-4"	10S

BENDING DIAGRAM

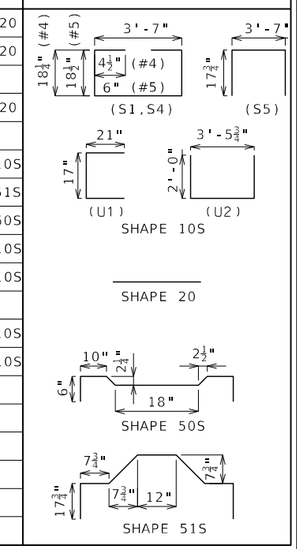

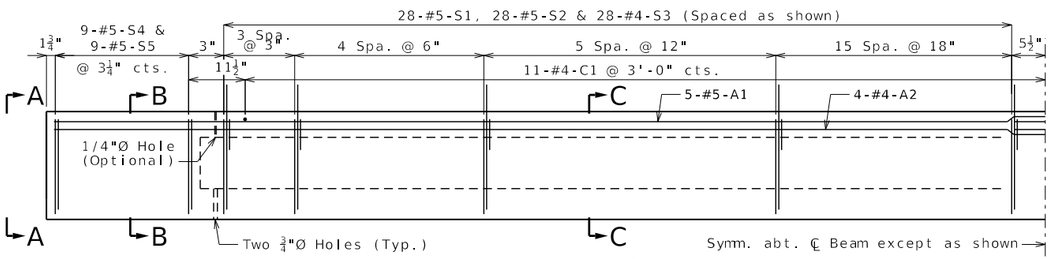

HALF ELEVATION

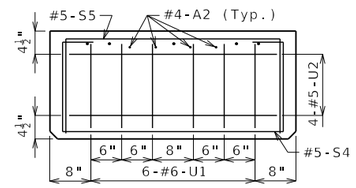

ELEVATION A-A

Strands not shown for clarity.

All dimensions are out to out. Use symmetry for dimensions not shown.

Hooks and bends shall be in accordance with the CRSI Manual of Standard Practice for Detailing Reinforced Concrete Structures, Stirrup and Tie Dimensions.

Actual lengths are measured along centerline of bar to the nearest inch.

Minimum clearance to reinforcing shall be one inch, unless otherwise shown.

All reinforcement shall be Grade 60.

All S2 bars shall be epoxy coated.

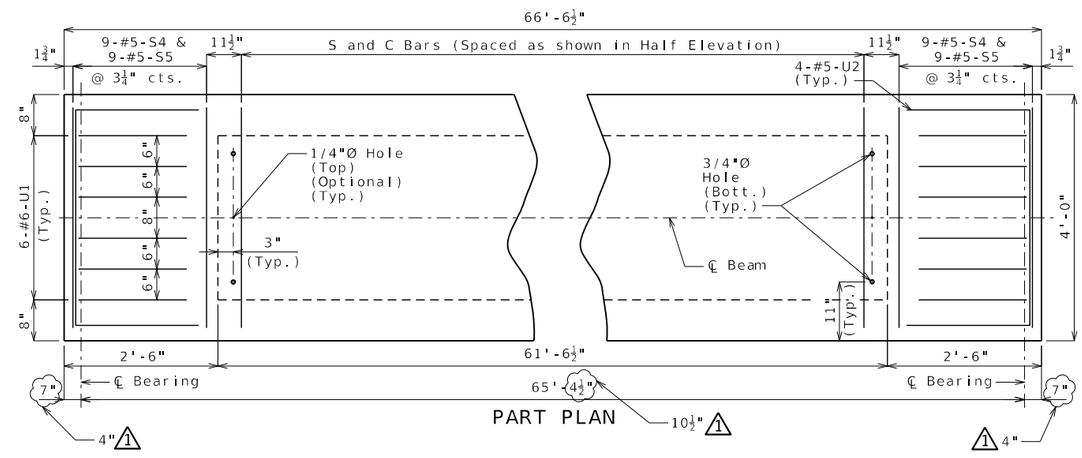

PART PLAN

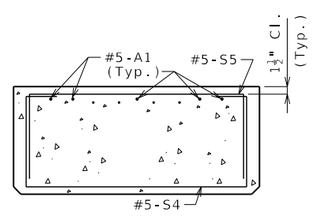

SECTION B-B

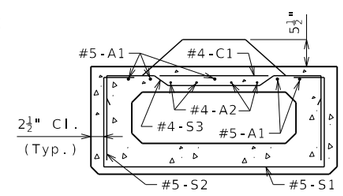

SECTION C-C

General Notes:

Concrete for prestressed beams shall be Class A-1 with f'c = 9,500 psi and f'ci = 7,500 psi.

Use 38 strands, 0.6"Ø Grade 270, with an initial prestress force of 1,670 kips.

Pretensioned members shall be in accordance with Sec 1029.

Fabricator shall be responsible for location and design of lifting devices.

Exterior and interior beams are the same except: coil ties, application of bond breaker.

For Beam Camber Diagram, see Sheet No. 16.

For location of coil ties at concrete bent diaphragms, see Sheets No. 10 and 15.

(4) ℄ 3/4"Ø (Min.) Coil Tie Rods 2'-6" long (13½" at exterior face of exterior beams at end bents)

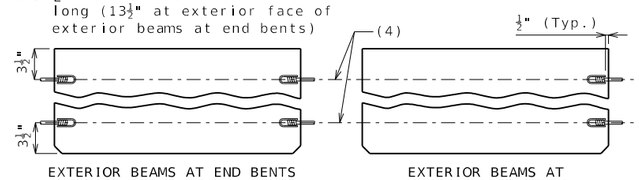

EXTERIOR BEAMS AT END BENTS
INTERIOR BEAMS AT ALL BENTS

EXTERIOR BEAMS AT INTERMEDIATE BENTS

COIL TIES

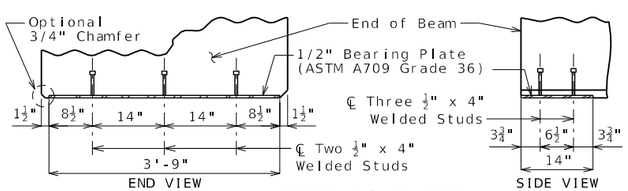

BEARING PLATE

SPREAD BOX BEAMS - SPAN (2-3)

Detailed May 2025
Checked May 2025

Note: This drawing is not to scale. Follow dimensions.

STATE OF MISSOURI
ANOUSONE AROUNPRADITH
NUMBER PE-29317
PROFESSIONAL ENGINEER
THIS SHEET HAS BEEN SIGNED, SEALED AND DATED ELECTRONICALLY.

DATE PREPARED 7/17/2025

ROUTE	STATE
W	MO
DISTRICT	SHEET NO.
BR	A9670-14

COUNTY: ST. CHARLES
JOB NO.: JST0020
CONTRACT ID.:
PROJECT NO.:
BRIDGE NO.: A9670

DATE	DESCRIPTION
07/17/25	NDC0017 REVISED PS BEAM DIMENSION

MISSOURI HIGHWAYS AND TRANSPORTATION COMMISSION
105 WEST CAPITOL
JEFFERSON CITY, MO 65102
1-888-ASK-MODOT (1-888-275-6636)

IMPROVE 70 ALLIANCE

HNTB
211 N. BROADWAY STE. 2975
ST LOUIS, MO 63102
CERTIFICATE OF AUTHORITY NO. 001270

Bartlett & West
601 MONROE ST., SUITE 201 - JEFFERSON CITY, MO 65101
PHONE: 573-635-7627 FAX: 573-635-7628
CERTIFICATE OF AUTHORITY NO. 000107 - ENGINEERING
WWW.BARTLETTWEST.COM

REV.

07/02/2025
Released for Construction

BILL OF REINFORCING STEEL

NO. REQ'D.	MARK NO. (SIZE MARK)	LOCATION	EPOXY (E)	SHAPE NO.	STIRRUP (S)	SUBSTR. (X)	VARIES (V)	NO. EACH	B FT. IN.	C FT. IN.	D FT. IN.	E FT. IN.	F FT. IN.	H FT. IN.	K FT. IN.	NOMINAL LENGTH FT. IN.	ACTUAL LENGTH FT. IN.	WEIGHT LBS.
		END BENT 1																
5	6 H100	BEAM	E	20					35 1.000							35 1	35 1	263
4	6 H101	BEAM	E	20					35 1.000							35 1	35 1	211
5	6 H102	BEAM	E	20					25 1.750							25 2	25 2	189
5	6 H103	BEAM	E	20					14 6.000							14 6	14 6	109
5	6 H104	DIAPHRAGM	E	20					35 1.000							35 1	35 1	263
9	6 H105	DIAPHRAGM	E	20					5 4.000							5 4	5 4	72
3	6 H106	DIAPHRAGM	E	20					35 1.000							35 1	35 1	158
4	5 H107	STRAND TIE	E	20					6 6.000							6 6	6 6	27
4	8 H110	WING	E	20					8 6.500							8 7	8 7	92
7	6 H111	WING	E	19	S				6 10.000	12.000						7 10	7 8	81
7	6 H112	WING	E	20					7 9.000							7 9	7 9	81
4	8 H113	WING	E	19	S				8 0.000	12.000						9 0	8 11	95
4	8 H120	WING	E	20					8 7.000							8 7	8 7	92
7	6 H121	WING	E	19	S				6 7.000	12.000						7 7	7 5	78
7	6 H122	WING	E	20					7 9.000							7 9	7 9	81
4	8 H123	WING	E	19	S				8 0.000	12.000						9 0	8 11	95
2	5 U100	BEAM	E	31	S				4 5.000	2 8.750	4 5.000					12 6	12 3	26
3	5 U101	BEAM	E	31	S				4 6.000	2 8.750	4 6.000					12 8	12 5	39
4	5 U102	BEAM	E	31	S				4 7.000	2 8.750	4 7.000					12 10	12 7	52
3	5 U103	BEAM	E	31	S				4 4.000	2 8.750	4 4.000					12 4	12 1	38
2	5 U104	BEAM	E	31	S				4 2.000	2 8.750	4 2.000					12 0	11 9	25
24	4 U105	BEAM	E	13	S				2 8.750	2 10.000	2 8.750	2 10.000				11 11	11 8	187
6	4 U106	BEAM	E	13	S				2 8.750	2 8.000	2 8.750	2 8.000				11 7	11 4	45
3	4 U107	BEAM	E	10	S					2 10.000	2 8.750					8 5	8 3	17
3	4 U108	BEAM	E	10	S					2 8.000	2 8.750					8 1	7 11	16
44	6 U120	DIAPHRAGM	E	19	S				5 3.000	2 2.000						7 5	7 3	479
20	6 U121	DIAPHRAGM	E	19	S				15.000	2 8.750						4 0	3 10	115
20	5 U122	DIAPHRAGM	E	31	S				2 2.000	2 3.000	2 2.000					7 6	7 4	153
32	5 U123	DIAPHRAGM	E	19	S				2 0.000	15.000						3 3	3 2	106
12	5 V100	BEAM	E	17					4 5.500							5 1	5 1	64
24	6 V101	DIAPHRAGM	E	19	S				15.000	6.000						0 21	0 19	57
2	6 V110	WING	E	20					5 0.250							5 0	5 0	15
12	6 V111	WING	E	20			V	2	5 2.750							5 3	5 3	
		INCREMENT =							5 0.500							5 1	5 1	93
		0.375 INCH																
2	6 V120	WING	E	20					5 3.000							5 3	5 3	16
12	6 V121	WING	E	20			V	2	5 5.000							5 5	5 5	
		INCREMENT =							5 3.375							5 3	5 3	96
		0.375 INCH																
7	6 F110	WING	E	15					2 3.000	5 4.500	2 3.000	17.000	21.000	21.000	17.000	9 11	9 10	103
2	6 F111	DIAPHRAGM	E	21					6 8.125	2 8.000				6 6.375	16.625	9 4	9 1	27
7	6 F120	WING	E	15					2 3.000	4 9.000	2 3.000	17.000	21.000	21.000	17.000	9 3	9 2	96
2	6 F121	DIAPHRAGM	E	15					6 1.625	2 8.500				6 0.000	15.375	8 10	8 9	26
		END BENT 3																
5	6 H300	BEAM	E	20					35 1.000							35 1	35 1	263
4	6 H301	BEAM	E	20					35 1.000							35 1	35 1	211
5	6 H302	BEAM	E	20					25 1.750							25 2	25 2	189
5	6 H303	BEAM	E	20					14 6.000							14 6	14 6	109
5	6 H304	DIAPHRAGM	E	20					35 1.000							35 1	35 1	263
9	6 H305	DIAPHRAGM	E	20					5 4.000							5 4	5 4	72
3	6 H306	DIAPHRAGM	E	20					35 1.000							35 1	35 1	158
4	5 H307	STRAND TIE	E	20					6 6.000							6 6	6 6	27
4	8 H310	WING	E	20					8 6.500							8 7	8 7	92
7	6 H311	WING	E	19	S				6 10.000	12.000						7 10	7 8	81
7	6 H312	WING	E	20					7 9.000							7 9	7 9	81
4	8 H313	WING	E	19	S				8 0.000	12.000						9 0	8 11	95
4	8 H320	WING	E	20					8 7.000							8 7	8 7	92
7	6 H321	WING	E	19	S				6 7.000	12.000						7 7	7 5	78
7	6 H322	WING	E	20					7 9.000							7 9	7 9	81
4	8 H323	WING	E	19	S				8 0.000	12.000						9 0	8 11	95
2	5 U300	BEAM	E	31	S				4 5.000	2 8.750	4 5.000					12 6	12 3	26
3	5 U301	BEAM	E	31	S				4 6.000	2 8.750	4 6.000					12 8	12 5	39
4	5 U302	BEAM	E	31	S				4 7.000	2 8.750	4 7.000					12 10	12 7	52
3	5 U303	BEAM	E	31	S				4 4.000	2 8.750	4 4.000					12 4	12 1	38
2	5 U304	BEAM	E	31	S				4 3.000	2 8.750	4 3.000					12 2	11 11	25
24	4 U305	BEAM	E	13	S				2 8.750	2 10.000	2 8.750	2 10.000				11 11	11 8	187
6	4 U306	BEAM	E	13	S				2 8.750	2 8.000	2 8.750	2 8.000				11 7	11 4	45
3	4 U307	BEAM	E	10	S					2 10.000	2 8.750					8 5	8 3	17
3	4 U308	BEAM	E	10	S					2 8.000	2 8.750					8 1	7 11	16
44	6 U320	DIAPHRAGM	E	19	S				5 3.000	2 2.000						7 5	7 3	479
20	6 U321	DIAPHRAGM	E	19	S				16.000	2 8.750						4 1	3 11	118
20	5 U322	DIAPHRAGM	E	31	S				2 2.000	2 3.000	2 2.000					7 6	7 4	153
32	5 U323	DIAPHRAGM	E	19	S				2 0.000	15.000						3 3	3 2	106
12	5 V300	BEAM	E	17					4 6.000							5 1	5 1	64
24	6 V301	DIAPHRAGM	E	19	S				16.000	6.000						0 22	0 20	60
2	6 V310	WING	E	20					5 2.250							5 2	5 2	16
12	6 V311	WING	E	20			V	2	5 4.000							5 4	5 4	
		INCREMENT =							5 2.375							5 2	5 2	95
		0.375 INCH																
2	6 V320	WING	E	20					5 4.000							5 4	5 4	16
12	6 V321	WING	E	20			V	2	5 5.750							5 6	5 6	
		INCREMENT =							5 4.250							5 4	5 4	98
		0.375 INCH																
7	6 F310	WING	E	15					2 3.000	5 4.500	2 3.000	17.000	21.000	21.000	17.000	9 11	9 10	103
2	6 F311	DIAPHRAGM	E	21					6 8.125	2 8.000				6 6.375	16.625	9 4	9 1	27
7	6 F320	WING	E	15					2 3.000	4 9.000	2 3.000	17.000	21.000	21.000	17.000	9 3	9 2	96
2	6 F321	DIAPHRAGM	E	15					6 1.625	2 8.000				6 0.000	15.375	8 10	8 8	26
		INT. BENT 2																
8	9 H200	BEAM	E	20		X			34 9.000							34 9	34 9	945
10	6 H201	BEAM	E	20		X			34 9.000							34 9	34 9	522
8	9 H202	BEAM	E	18		X			34 9.000							37 3	37 3	1013
14	6 H203	BEAM	E	10	S	X				12.000	3 1.500					5 2	4 10	102
40	8 H210	FOOTING		18		X			10 8.000							12 6	12 6	1335
40	8 H211	FOOTING		18		X			7 8.000							9 6	9 6	1015
44	6 U200	BEAM	E	13	S	X			3 3.000	3 9.000	3 3.000	3 9.000				15 4	14 10	980
12	6 U201	BEAM	E	10	S	X				12.000	3 3.000					5 3	4 11	89
8	6 U202	BEAM	E	10	S	X				3 9.000	3 3.000					10 9	10 5	125
8	6 U210	FOOTING		10	S	X				5 4.000	10 0.000					20 8	20 4	244
14	9 V200	COLUMN	E	17		X			11 6.000							12 9	12 9	607
14	9 V201	COLUMN	E	17		X			14 0.000							15 3	15 3	726
14	9 V202	COLUMN	E	17		X			16 6.000							17 9	17 9	845
22	9 V203	COLUMN	E	17		X			22 6.000							23 9	23 9	1777
152	5 P200	COLUMN	E	34	S	X			2 9.000							9 9	9 9	1533
15	6 D200	BEAM	E	20		X			3 2.000							3 2	3 2	71

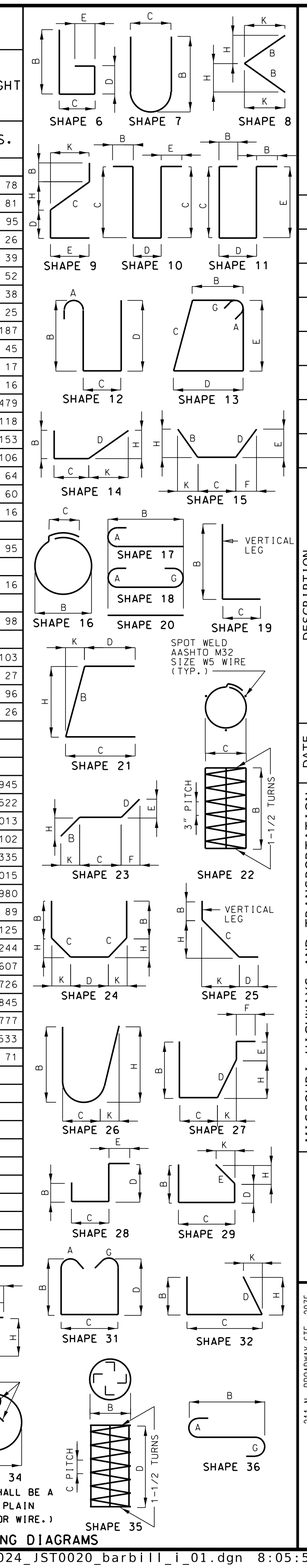

BENDING DIAGRAMS

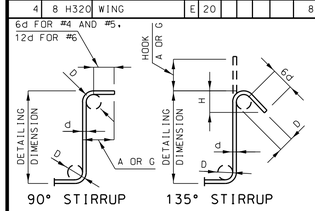

STIRRUP HOOK DIMENSIONS				
GRADES 40 - 50 - 60 KSI				
BAR SIZE	D (IN.)	90° HOOK	135° HOOK	
		HOOK A OR G	HOOK A OR G	APPROX. H
#4	2"	4 1/2"	4 1/2"	3"
#5	2 1/2"	6"	5 1/2"	3 3/4"
#6	4 1/2"	12"	8"	4 1/2"

NOTE: UNLESS OTHERWISE NOTED DIAMETER "D" IS THE SAME FOR ALL BENDS AND HOOKS ON A BAR.

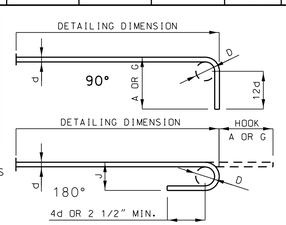

END HOOK DIMENSIONS				
BAR SIZE	D (IN.)	ALL GRADES		
		180° HOOKS		90° HOOKS
		A OR G	J	A OR G
#3	2 1/4"	5"	3"	6"
#4	3"	6"	4"	8"
#5	3 3/4"	7"	5"	10"
#6	4 1/2"	8"	6"	12"
#7	5 1/4"	10"	7"	14"
#8	6"	11"	8"	16"
#9	9 1/2"	15"	11 3/4"	19"
#10	10 3/4"	17"	13 1/4"	22"
#11	12"	19"	14 3/4"	2'-0"
#14	18 1/4"	2'-3"	21 3/4"	2'-7"

NOTE:
ALL STANDARD HOOKS AND BENDS OTHER THAN 180 DEGREE ARE TO BE BENT WITH SAME PROCEDURE AS FOR 90 DEGREE STANDARD HOOKS.
HOOKS AND BENDS SHALL BE IN ACCORDANCE WITH THE PROCEDURES AS SHOWN ON THIS SHEET.
E = EPOXY COATED REINFORCEMENT.
S = STIRRUP.
X = BAR IS INCLUDED IN SUBSTRUCTURE QUANTITIES.
V = BAR DIMENSIONS VARY IN EQUAL INCREMENTS BETWEEN DIMENSIONS SHOWN ON THIS LINE AND THE FOLLOWING LINE.
NO. EA. = NUMBER OF BARS OF EACH LENGTH.
NOMINAL LENGTHS ARE BASED ON OUT TO OUT DIMENSIONS SHOWN IN BENDING DIAGRAMS AND ARE LISTED FOR FABRICATORS USE. (NEAREST INCH)
ACTUAL LENGTHS ARE MEASURED ALONG CENTERLINE BAR TO THE NEAREST INCH.
PAYWEIGHTS ARE BASED ON ACTUAL LENGTHS.
FOUR ANGLE OR CHANNEL SPACERS ARE REQUIRED FOR EACH COLUMN SPIRAL. SPACERS ARE TO BE PLACED ON INSIDE OF SPIRALS. LENGTH AND WEIGHT OF COLUMN SPIRALS DO NOT INCLUDE SPLICES OR SPACERS.
REINFORCING STEEL (GRADE 60) FY = 60,000 PSI.

DATE PREPARED	7/2/2025
ROUTE	W
STATE	MO
DISTRICT	BR
SHEET NO.	A9670-24
COUNTY	ST. CHARLES
JOB NO.	JST0020
CONTRACT ID.	
PROJECT NO.	
BRIDGE NO.	A9670

DESCRIPTION

DATE

MISSOURI HIGHWAYS AND TRANSPORTATION COMMISSION
105 WEST CAPITOL
JEFFERSON CITY, MO 65102
1-888-ASK-MODOT (1-888-275-6636)

211 N. BROADWAY STE. 2975
ST LOUIS, MO 63102
CERTIFICATE OF AUTHORITY NO. 001270

601 MONROE ST. SUITE 201 - JEFFERSON CITY, MO 65101
PHONE: (573) 635-7627 FAX: (573) 635-7628
CERTIFICATE OF AUTHORITY NO. 000167 - ENGINEERING
WWW.BARTLETTWEST.COM

Detailed Apr. 2025
Checked Apr. 2025

Note: This drawing is not to scale. Follow dimensions.

IMPROVE 70 ALLIANCE
07/02/2025
Released for Construction

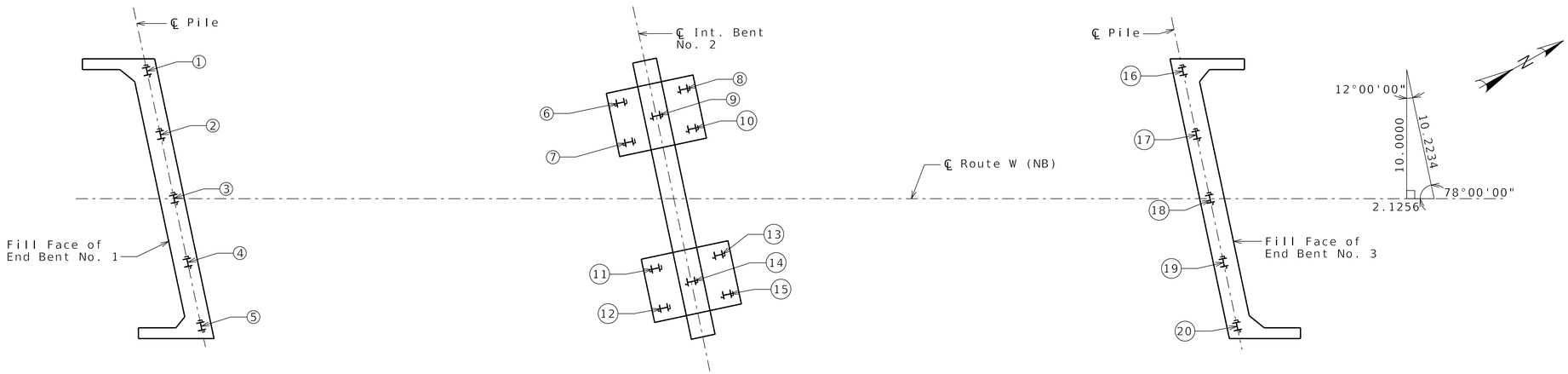

PART PLAN SHOWING PILE NUMBERING FOR RECORDING AS-BUILT PILE DATA

As-Built Pile Data

Pile No.	Length in Place (ft)	PDA Nom. Axial Compressive Resistance (kips)	PDA End of Drive Blow Count (blows/in.)	Actual End of Drive Blow Count (blows/in.)	Remarks
					End Bent No. 1
1					
2					
3					
4					
5					

As-Built Pile Data

Pile No.	Length in Place (ft)	PDA Nom. Axial Compressive Resistance (kips)	PDA End of Drive Blow Count (blows/in.)	Actual End of Drive Blow Count (blows/in.)	Remarks
					Int. Bent No. 2
6					
7					
8					
9					
10					
11					
12					
13					
14					
15					

As-Built Pile Data

Pile No.	Length in Place (ft)	PDA Nom. Axial Compressive Resistance (kips)	PDA End of Drive Blow Count (blows/in.)	Actual End of Drive Blow Count (blows/in.)	Remarks
					End Bent No. 3
16					
17					
18					
19					
20					

Note:
Indicate in remarks column:
A. Pile type and grade
B. Batter
C. Driven to practical refusal
D. PDA test pile
E. Minimum tip elevation control led
(Use when actual blow count is less than PDA blow count due to minimum tip elevation requirement. A plus sign (+) shall be placed after the PDA nominmal axial compressive reistance value indicating actual value is higher than PDA value.)

DATE PREPARED	
7/2/2025	
ROUTE: W	STATE: MO
DISTRICT: BR	SHEET NO.: A9670-26
COUNTY: ST. CHARLES	
JOB NO.: JST0020	
CONTRACT ID.	
PROJECT NO.	
BRIDGE NO.: A9670	

DESCRIPTION | DATE

MISSOURI HIGHWAYS AND TRANSPORTATION COMMISSION
105 WEST CAPITOL
JEFFERSON CITY, MO 65102
1-888-ASK-MODOT (1-888-275-6636)

IMPROVE 70 ALLIANCE

HNTB
211 N. BROADWAY STE. 2975
ST LOUIS, MO 63102
CERTIFICATE OF AUTHORITY
NO. 001270

Bartlett&West
601 MONROE ST. SUITE 201 - JEFFERSON CITY, MO 65101
PHONE: (573) 634-2448 - FAX: (573) 634-8291
CERTIFICATE OF AUTHORITY NO. 000107 - ENGINEERING
WWW.BARTLETTWEST.COM

Detailed Apr. 2025
Checked Apr. 2025

Note: This drawing is not to scale. Follow dimensions.

07/02/2025
Released for Construction
IMPROVE 70 ALLIANCE

GENERALIZED SUBSURFACE STRATIGRAPHY

See Geotechnical Memo for the Strata Descriptions

PROJECT I-70 Program: Warrenton to Wentzville COUNTY St. Charles County DISTRICT
BRIDGE NO. MODOT BRIDGE NO. A9670

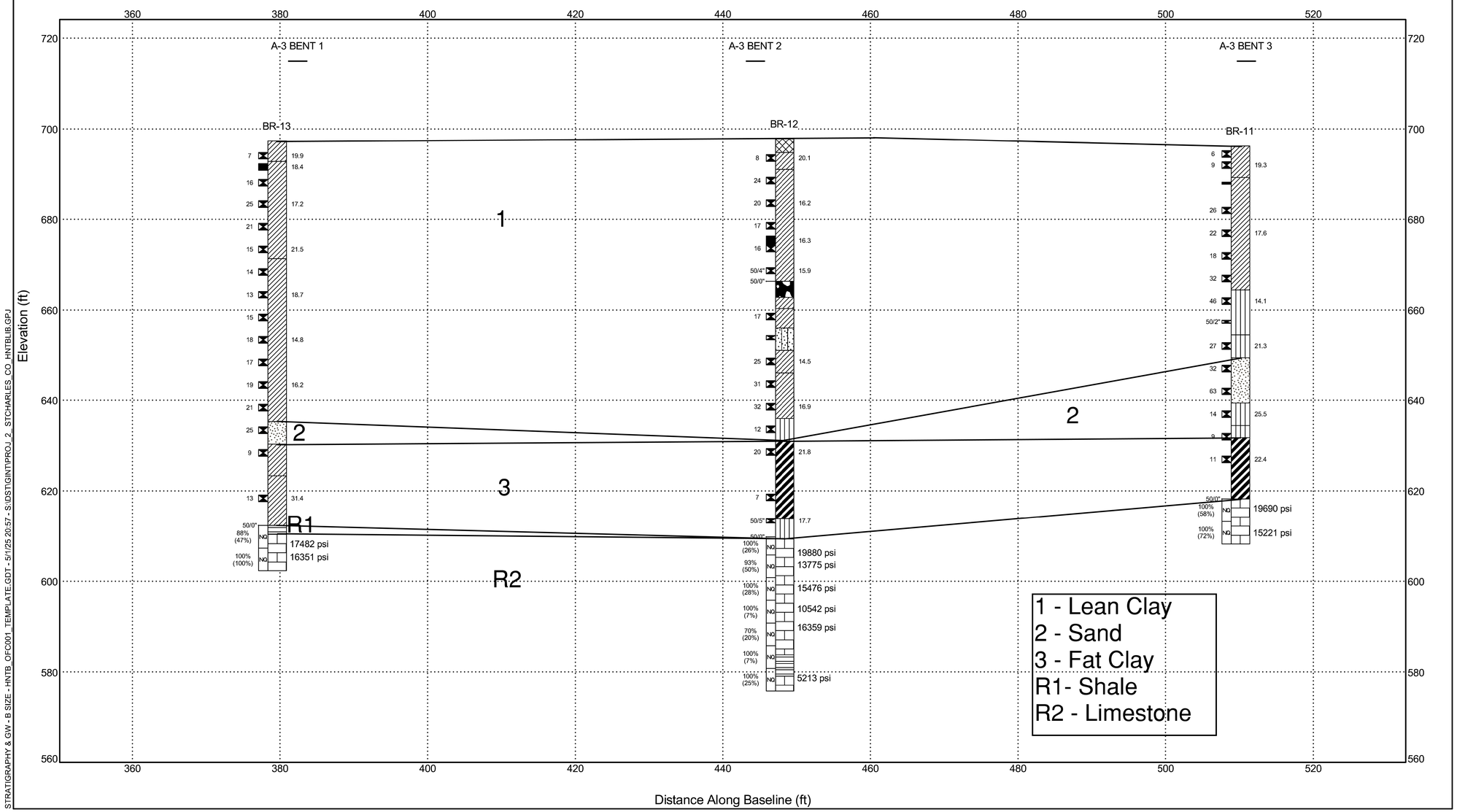

STRATIGRAPHY & GW - B SIZE - HNTB_OFC001_TEMPLATE.GDT - 5/1/25 20:57 - S:\DSTIGINT\PROJ_2_STCHARLES_CO_HNTBLIB.GPJ

BORING DATA

Note: For locations of borings, see Sheet No. 1.

Note: This drawing is not to scale. Follow dimensions.

Detailed Apr. 2025
Checked Apr. 2025

STATE OF MISSOURI
ANOUSONE AROUNPRADITH
NUMBER PE-29317
PROFESSIONAL ENGINEER
THIS SHEET HAS BEEN SIGNED, SEALED AND DATED ELECTRONICALLY.

DATE PREPARED	7/2/2025
ROUTE	W
STATE	MO
DISTRICT	BR
SHEET NO.	A9670-27
COUNTY	ST. CHARLES
JOB NO.	JST0020
CONTRACT ID.	
PROJECT NO.	
BRIDGE NO.	A9670

DESCRIPTION
DATE

MISSOURI HIGHWAYS AND TRANSPORTATION COMMISSION
105 WEST CAPITOL
JEFFERSON CITY, MO 65102
1-888-ASK-MODOT (1-888-275-6636)

IMPROVE 70 ALLIANCE

HNTB 211 N. BROADWAY STE. 2915 ST LOUIS, MO 63102 CERTIFICATE OF AUTHORITY NO. 001270

Bartlett & West 601 MONROE ST. SUITE 201 - JEFFERSON CITY, MO 65101 PHONE: (573) 634-2448 - FAX: (573) 634-8693 CERTIFICATE OF AUTHORITY NO. 000107 - ENGINEERING WWW.BARTLETTWEST.COM