MISSOURI HIGHWAYS AND TRANSPORTATION COMMISSION

Note:
See Civil Package 2: Early Grading for project reference points and project coordinate points.

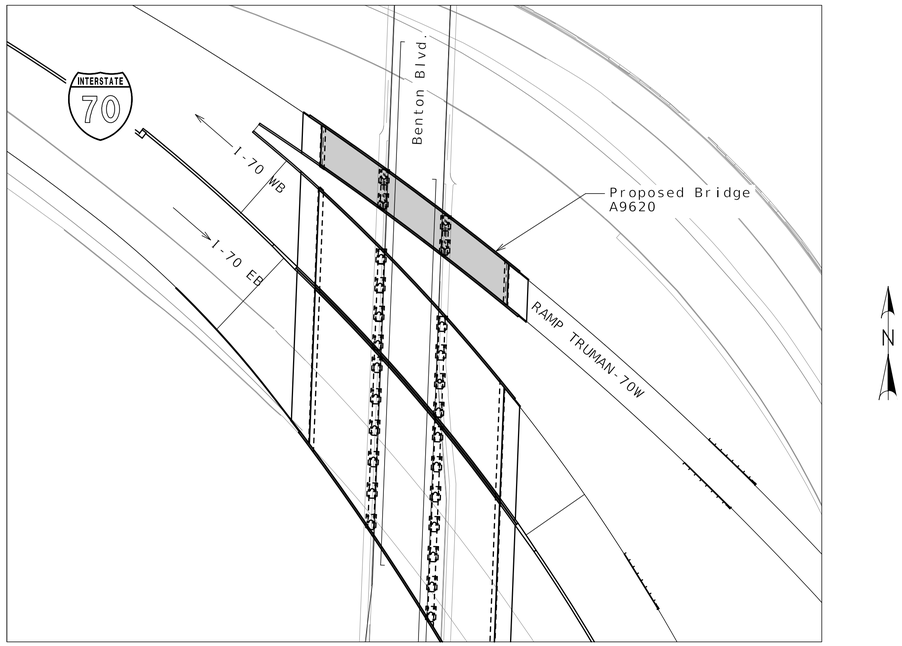

LOCATION SKETCH

INDEX OF DRAWINGS

B0-01 Title Sheet and Index
B0-02 General Plan and Elevation
B0-03 General Notes
B0-04 Substructure Layout
B0-05 Details of End Bent No. 1
B0-06 Details of End Bent No. 1
B0-07 Details of End Bent No. 1
B0-08 Vertical Drain at End Bents
B0-09 Details of Intermediate Bent No. 2
B0-10 Details of Intermediate Bent No. 2
B0-11 Details of Intermediate Bent No. 3
B0-12 Details of Intermediate Bent No. 3
B0-13 Details of End Bent No. 4
B0-14 Details of End Bent No. 4
B0-15 Details of End Bent No. 4
B0-16 As-Built Pile Data
B0-17 Boring Logs
B0-18 Boring Logs
B0-19 Boring Logs
B0-20 Boring Logs
B0-21 Boring Logs
B0-22 Boring Logs
B0-23 Boring Logs

Released For Construction
Not to Scale
Revision: 0.0
Date: 06/09/2025
Package: BRD-06-WBRamp-Benton-Subst

BRIDGE: RAMP TRUMAN-70W OVER BENTON BLVD.

RAMP TRUMAN-70W FROM ROUTE 40 to ROUTE I-670
ABOUT 3.0 MILES WEST OF ROUTE 40
BEGINNING STATION 1431+26.12

Detailed FEB 2025
Checked MAR 2025

Note: This drawing is not to scale. Follow dimensions.

STATE OF MISSOURI
VAN WILLIAM ROBBINS
PE-2017015106
PROFESSIONAL ENGINEER
06-03-25

DATE PREPARED	06/02/2025
ROUTE	I-70
STATE	MO
DISTRICT	BR
SHEET NO.	B06-01
COUNTY	JACKSON
JOB NO.	J4I1486D
CONTRACT ID.	240807-C01
PROJECT NO.	
BRIDGE NO.	A9620

DATE	DESCRIPTION
06/02/25	REV 0 - RFC SUBMITTAL

MISSOURI HIGHWAYS AND TRANSPORTATION COMMISSION
105 WEST CAPITOL
JEFFERSON CITY, MO 65102
1-888-ASK-MODOT (1-888-275-6636)

CLARKSON RADMACHER JOINT VENTURE
715 KIRK DRIVE
KANSAS CITY, MO 64105-1310
CERTIFICATE OF AUTHORITY
NO. 001270

HNTB

(61.1'-60.7'-63.5') Prestressed Concrete NU Girder Spans

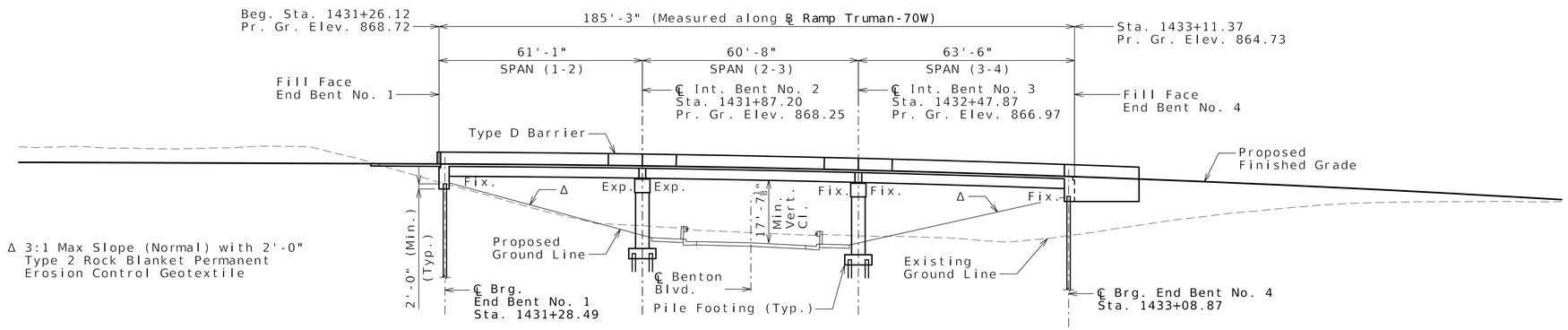

ELEVATION

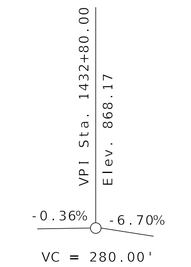

PROFILE GRADE

◐ Indicates location of borings.

Notice and Disclaimer Regarding Boring Log Data

The locations of all subsurface borings performed by the design-build team for this structure are shown on the plan sheets for this structure. The logs for all locations indicated are provided on Sheets No. B06-17 thru B06-23. Labrotory test results, rock core photographs and other information obtained at these borings are available in the corresponding Foundation Recommendations Memo prepared by HNTB. By the nature of the exploration process, the information gathered at these borings represents only a small fraction of the total volume of material at the Site. Interpolation between data samples may not be indicative of the nature and extent of the variations that actually exist between sampling locations.

CURVE DATA

CURVE RAMP TRUMAN-70W
PI = 1431+71.17
PC = 1426+66.44
PT = 1436+61.70
Δ = 23°30'54.6" (RT)
D = 2°21'45.8"
L = 995.26'
T = 504.74'
R = 2,425.00'

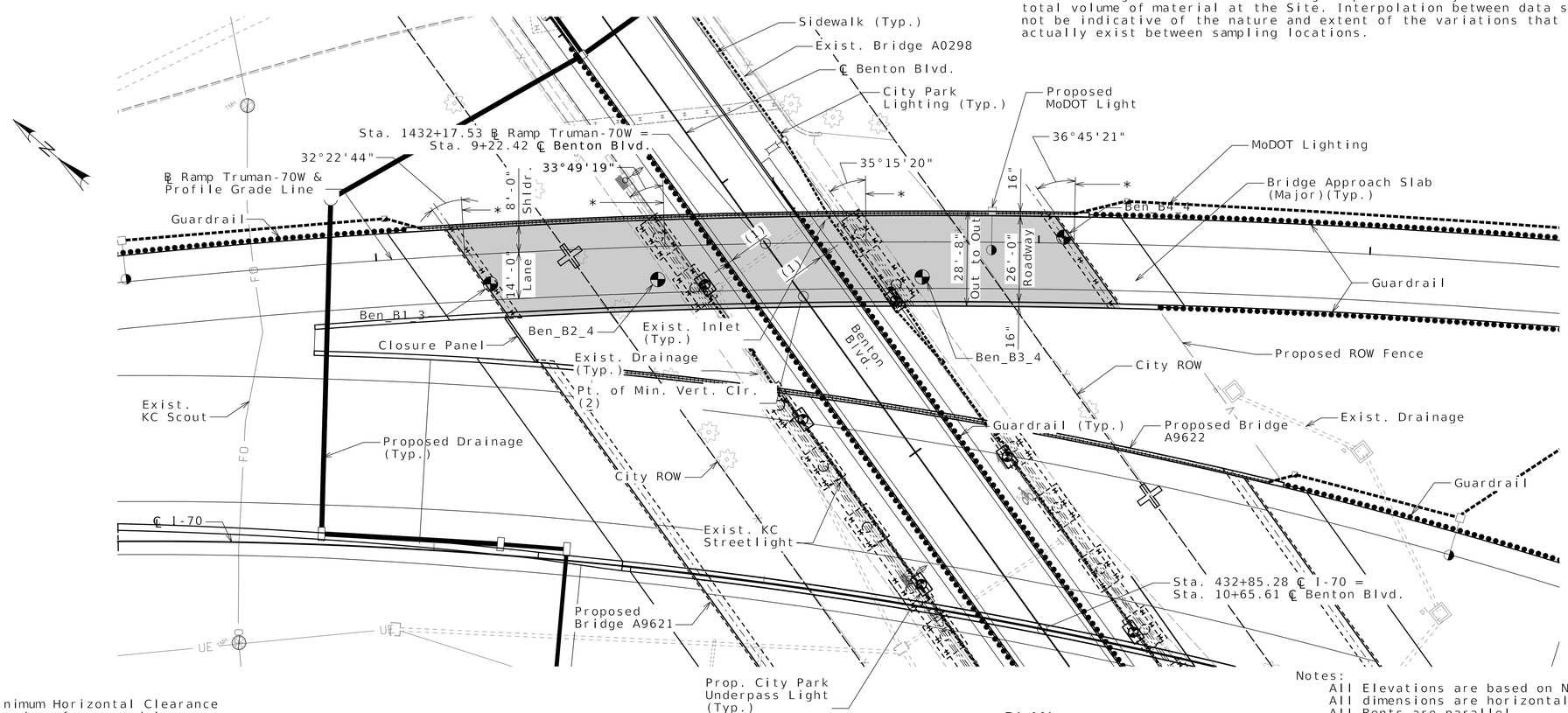

PLAN

Minimum Horizontal Clearance
to edge of proposed lane:
(1) 1'-6"

(2) Point of minimum vertical clearance.
Sta. 1432+29.43, 17.13' Rt., ℄ Ramp Truman-70W

∗ Radial line to ℄ Ramp Truman-70W.

Released For Construction
Not to Scale
Revision: 0.0
Date: 06/09/2025
Package: BRD-06-WBRamp-Benton-Subst

Notes:
All Elevations are based on NAVD88 datum unless otherwise noted.
All dimensions are horizontal.
All Bents are parallel.
Existing Bridge A0298 to be removed in accordance with Sec. 216. Existing structures & foundations shown may not represent what is left inplace after removal.
For footing elevations, see Sheets No. B06-09 and B06-11.
See Civil Package 4: Local Street 1 for Benton Ave. typical section and underpass lighting details.

GENERAL PLAN AND ELEVATION

Detailed FEB 2025
Checked MAR 2025

Note: This drawing is not to scale. Follow dimensions.

STATE OF MISSOURI
VAN WILLIAM ROBBINS
PE-2017015106
PROFESSIONAL ENGINEER
06-03-25

DATE PREPARED: 06/02/2025
ROUTE: I-70 | STATE: MO
DISTRICT: BR | SHEET NO.: B06-02
COUNTY: JACKSON
JOB NO.: J4I1486D
CONTRACT ID.: 240807-C01
PROJECT NO.:
BRIDGE NO.: A9620

DATE	DESCRIPTION
06/02/25	REV 0 - RFC SUBMITTAL

MISSOURI HIGHWAYS AND TRANSPORTATION COMMISSION
105 WEST CAPITOL
JEFFERSON CITY, MO 65102
1-888-ASK-MODOT (1-888-275-6636)

CLARKSON RADMACHER JOINT VENTURE
715 KIRK DRIVE
KANSAS CITY, MO 64105-1310
CERTIFICATE OF AUTHORITY NO. 001270

HNTB

General Notes:
For additional bridge details not shown, see A9620 (I-70 WB On Ramp Over Benton) Superstructure Package.

Design Specifications:
2020 AASHTO LRFD Bridge Design Specifications (9th Ed.) and 2023 AASHTO Guide Specifications for LRFD Seismic Bridge Design (3rd Edition)
Seismic Design Category = A (Nonseismic)
Design earthquake response spectral acceleration coefficient at 1.0 second period. $S_{D1} \leq 0.15$
Acceleration Coefficient (effective peak ground acceleration coefficient), A_s = N/A

Design Loading:
Vehicular = HL-93
Future Wearing Surface = 35 lb/sf
Earth - 120 lb/cf
Equivalent Fluid Pressure - 45 lb/cf
Superstructure: Simply-Supported, non-composite for dead load.
Continuous composite for live load.

Design Unit Stresses:

Class B Concrete (End Bents below Const. Jt.)	f'c = 3,000 psi
Class B-1 Concrete (Intermediate Bents)	f'c = 4,000 psi
Class B-2 Concrete (End Bents above construction joint)	f'c = 4,000 psi
Reinforcing Steel (ASTM A615 Grade 60)	fy = 60,000 psi
Structural HP Steel Pile (ASTM A709 Grade 50)	fy = 50,000 psi

Neoprene Pads:
Neoprene Bearing Pads shall be 60 durometer and shall be in accordance with Sec 716.

Joint Filler:
All joint filler shall be in accordance with Sec 1057 for preformed sponge rubber expansion and partition joint filler, except as noted.

Reinforcing Steel:
Minimum clearance to reinforcing steel shall be 1-1/2", unless otherwise shown.

All reinforcing in the End Bents No. 1 and 4 and Intermediate Bents No. 2 & 3 shall be epoxy coated. Reinforcing in the Intermediate Bents No. 2 & 3 pile cap footings shall be uncoated.

Minimum clearance between galvanized piles and uncoated (plain) reinforcing steel including bar supports shall be 1½". Nylon, PVC, or polyethylene spacers shall be used to maintain clearance. Nylon cable ties shall be used to bind the spacers to the reinforcement.

Concrete Protective Coatings:
Concrete and masonry protective coating shall be applied to concrete column and end bent wingwall exposed areas in accordance with Sec 711.

Sacrificial graffiti protective coating shall be applied to concrete column and end bent wingwall exposed areas in accordance with Sec 711.

Miscellaneous:
Outline of old work is indicated by light dashed lines. Heavy lines indicate new work U.N.O.

Abbreviations:
E.F. denotes Each Face
N.F. denotes Near Face
F.F. denotes Far face
U.N.O. denotes Unless Noted Otherwise

Foundation Data

Type	Design Data		Bent Number 1	2	3	4
Load Bearing Pile	Pile Type and Size		HP 12x53	HP 12x74	HP 12x74	HP 12x53
	Number	ea	5	12	12	5
	Approximate Length Per Each (1)	ft	110	88	88	105
	Pile Point Reinforcement	ea	All	All	All	All
	Min. Galvanized Penetration (Elev.)	ft	839	826	824	835
	Minimum Tip Penetration (Elev.)	ft	---	---	---	---
	Criteria for Min. Tip Penetration		---	---	---	---
	Pile Driving Verification Method		DF	DF	DF	DF
	Resistance Factor		0.40	0.40	0.40	0.40
	Minimum Nominal Axial Compressive Resistance	kip	498	514	514	498

(1) Pile length is maximum estimated for bent and includes embedment into concrete. Adjust as needed for bottom of concrete variations at each bent.

Load Bearing Piles:
Minimum Nominal Axial Compressive Resistance = Maximum Factored Loads/Resistance Factor
HP piles are anticipated to be driven to refusal on rock. Review all borings for depth of rock and restrict driving as appropriate to comply with hard rock driving criteria in accordance with Sec 702. When pile refusal on rock occurs, as approved by the engineer, the minimum nominal axial compressive resistance is verified and no additional pile driving verification method is required.
All piles shall be galvanized down to the minimum galvanized penetration (elevation).
Pile point reinforcement need not be galvanized. Shop drawings will not be required for pile point reinforcement.
The contractor shall make every effort to achieve the minimum galvanized penetration (elevation) shown on the plans for all piles. Deviations in penetration less than 5 feet of minimum will be considered acceptable provided the contractor makes the necessary corrections to ensure the minimum penetration is achieved on subsequent piles.
DF = FHWA-modified Gates Dynamic Pile Formula

Released For Construction
Not to Scale
Revision: 0.0
Date: 06/09/2025
Package: BRD-06-WBRamp-Benton-Subst

GENERAL NOTES

Detailed FEB 2025
Checked MAR 2025

Note: This drawing is not to scale. Follow dimensions.

STATE OF MISSOURI
VAN WILLIAM ROBBINS
PE-2017015106
PROFESSIONAL ENGINEER
Van W. Robbins
06-03-25

DATE PREPARED 06/02/2025
ROUTE I-70 | STATE MO
DISTRICT BR | SHEET NO. B06-03
COUNTY JACKSON
JOB NO. J4I1486D
CONTRACT ID. 240807-C01
PROJECT NO.
BRIDGE NO. A9620

DATE	DESCRIPTION
06/02/25	REV 0 - RFC SUBMITTAL

MISSOURI HIGHWAYS AND TRANSPORTATION COMMISSION
105 WEST CAPITOL
JEFFERSON CITY, MO 65102
1-888-ASK-MODOT (1-888-275-6636)

CLARKSON RADMACHER JOINT VENTURE
715 KIRK DRIVE
KANSAS CITY, MO 64105-1310
CERTIFICATE OF AUTHORITY NO. 001270
HNTB

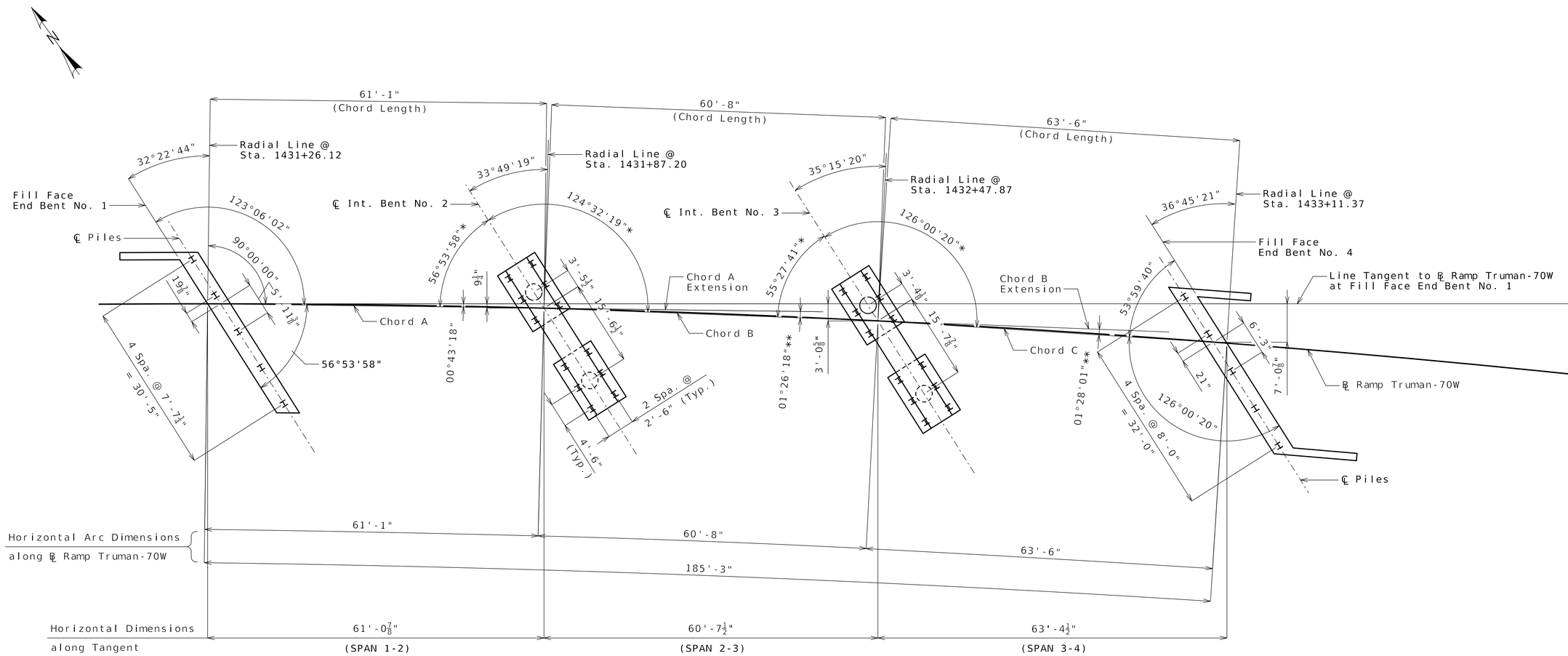

SUBSTRUCTURE LAYOUT

Notes:
All stations are given along ℄ Ramp Truman-70W.
All dimensions are horizontal.
* Angle between ℄ Bent and chord.
** Angle between extended chord and chord.

SUBSTRUCTURE LAYOUT

Released For Construction
Not to Scale
Revision: 0.0
Date: 06/09/2025
Package: BRD-06-WBRamp-Benton-Subst

Detailed FEB 2025
Checked MAR 2025

Note: This drawing is not to scale. Follow dimensions.

STATE OF MISSOURI
GINA D. HORNER
PE-30413
PROFESSIONAL ENGINEER
Gina D. Horner
06/03/25

DATE PREPARED	06/02/2025
ROUTE	I-70
STATE	MO
DISTRICT	BR
SHEET NO.	B06-04
COUNTY	JACKSON
JOB NO.	J4I1486D
CONTRACT ID.	240807-C01
PROJECT NO.	
BRIDGE NO.	A9620

DATE	DESCRIPTION
06/02/25	REV 0 - RFC SUBMITTAL

MISSOURI HIGHWAYS AND TRANSPORTATION COMMISSION
105 WEST CAPITOL
JEFFERSON CITY, MO 65102
1-888-ASK-MODOT (1-888-275-6636)

CLARKSON RADMACHER JOINT VENTURE
715 KIRK DRIVE
KANSAS CITY, MO 64105-1310
CERTIFICATE OF AUTHORITY
NO. 001270
HNTB

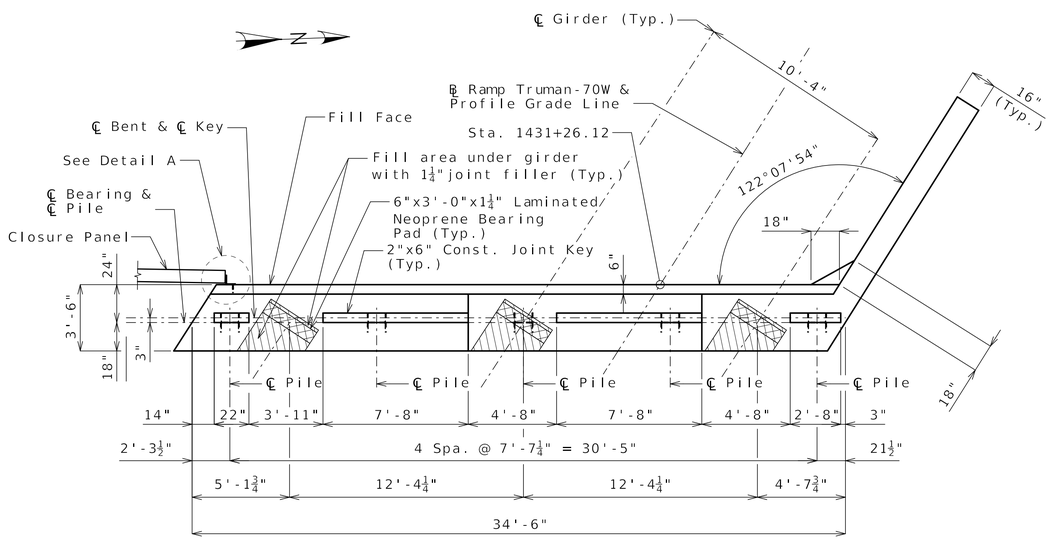

PLAN OF BEAM

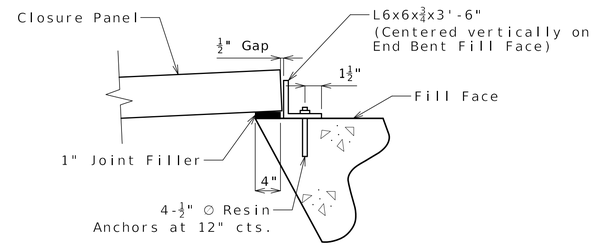

DETAIL A

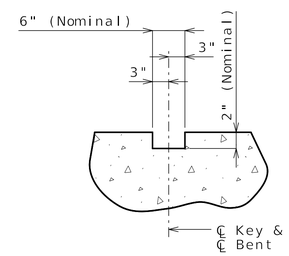

SECTION THRU KEY

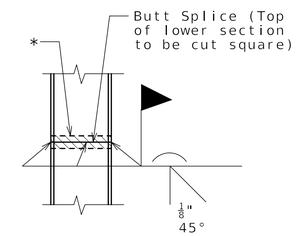

STEEL PILE SPLICE
(If required)

* Galvanizing material shall be omitted or removed one inch clear of weld locations in accordance with Sec 702.

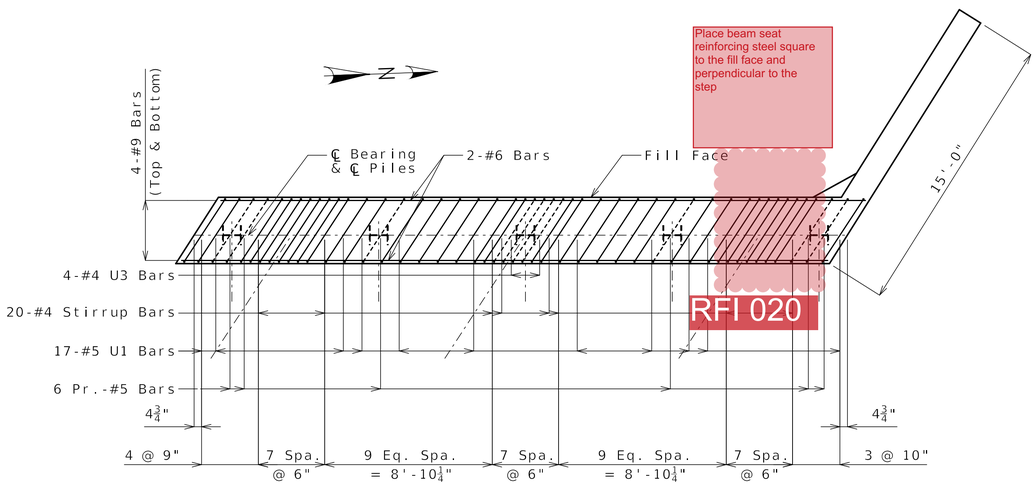

PLAN OF BEAM SHOWING REINFORCING
(Key and steps not shown for clarity)

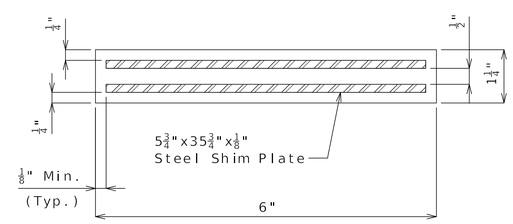

TYPICAL SECTION THRU
LAMINATED NEOPRENE BEARING PAD
3 Required per Bent

Notes:
Work this sheet with Sheets No. B06-06 and B06-07.
All U bars and pairs of vertical bars shall be placed along skew.
Reinforcing steel shall be shifted to clear piles. U-bars shall clear piles by at least 1½".
For details of bridge approach slab, see A9620 (I-70 On Ramp Over Benton) Superstructure Package.
For angle of girders relative to ℄ Bent, see A9620 (I-70 WB On Ramp Over Benton) Superstructure Package.
For Closure Panel details, see A9622 (I-70 WB Over Benton) Superstructure Package.

DETAILS OF END BENT NO. 1

Released For Construction
Not to Scale
Revision: 0.0
Date: 06/09/2025
Package: BRD-06-WBRamp-Benton-Subst

Detailed FEB 2025
Checked MAR 2025

Note: This drawing is not to scale. Follow dimensions.

STATE OF MISSOURI
GINA D. HORNER
PE-30413
PROFESSIONAL ENGINEER
Gina D. Horner
06/03/25

DATE PREPARED	
06/02/2025	
ROUTE	STATE
I-70	MO
DISTRICT	SHEET NO.
BR	B06-05
COUNTY	
JACKSON	
JOB NO.	
J4I1486D	
CONTRACT ID.	
240807-C01	
PROJECT NO.	
BRIDGE NO.	
A9620	

DATE	DESCRIPTION
06/02/25	REV 0 - RFC SUBMITTAL

MISSOURI HIGHWAYS AND TRANSPORTATION COMMISSION
105 WEST CAPITOL
JEFFERSON CITY, MO 65102
1-888-ASK-MODOT (1-888-275-6636)

CLARKSON RADMACHER JOINT VENTURE
HNTB
715 KIRK DRIVE
KANSAS CITY, MO 64105-1310
CERTIFICATE OF AUTHORITY
NO. 001270

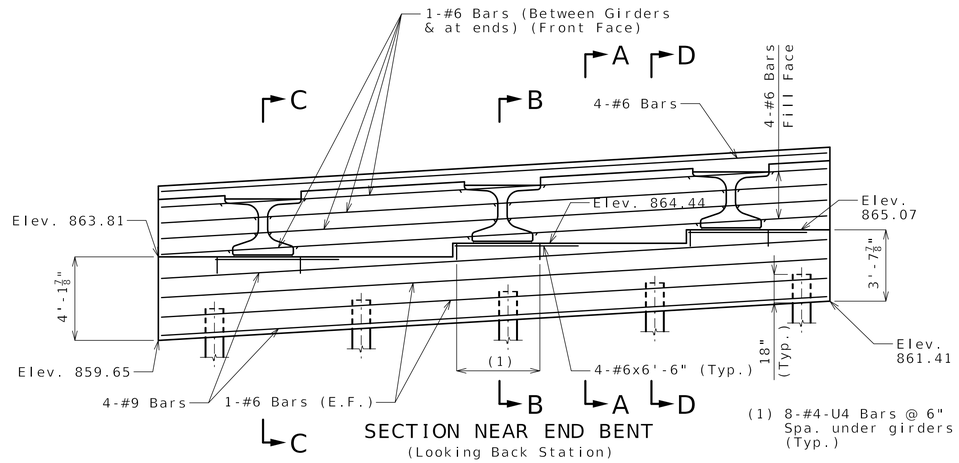

SECTION NEAR END BENT
(Looking Back Station)

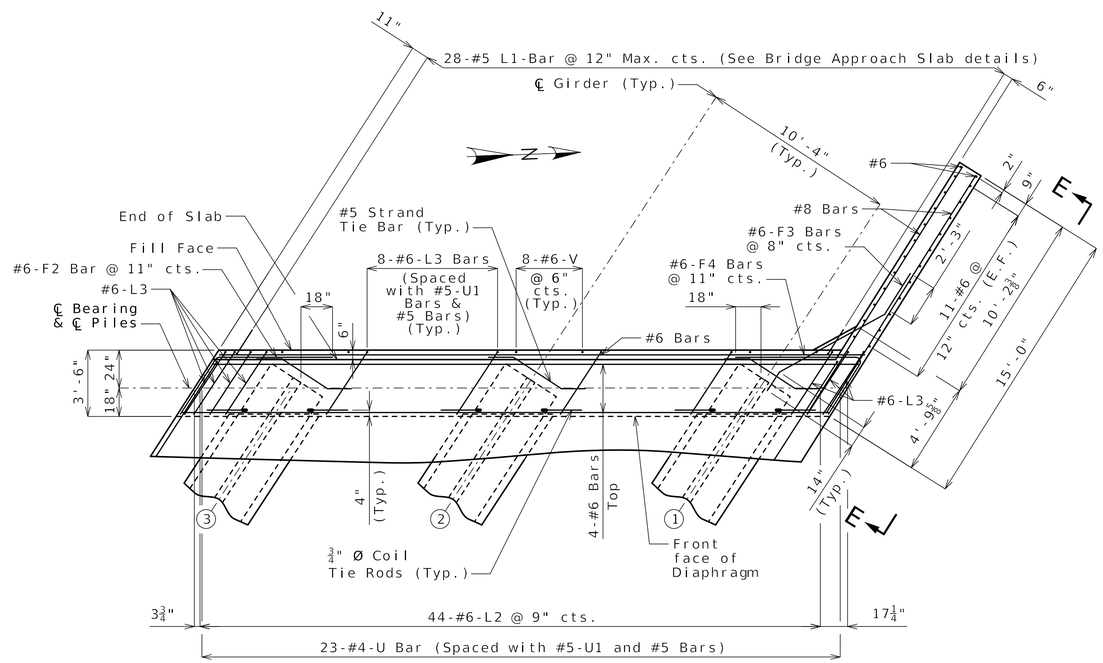

PART PLAN

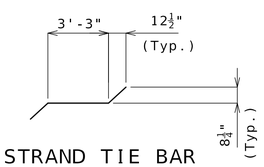

#5 STRAND TIE BAR

General Notes:

Work this sheet with Sheets No. B06-05 and B06-07.

For Sections A-A, B-B, C-C and D-D and Elevation E-E, see Sheet No. B06-07.

For location of coil tie rods, see A9620 (I-70 WB On Ramp Over Benton) Superstructure Package.

Strans at end of the girders shall be field bent or, if necessary, cut in field to maintain 1 1/2-inch minimum clearance to fill face of end bent.

The #6-F bars shall be bent in the field to clear girders.

(X) Denotes girder number

DETAILS OF END BENT NO. 1

Released For Construction
Not to Scale
Revision: 0.0
Date: 06/09/2025
Package: BRD-06-WBRamp-Benton-Subst

Detailed FEB 2025
Checked MAR 2025

Note: This drawing is not to scale. Follow dimensions.

STATE OF MISSOURI
GINA D. HORNER
PE-30413
PROFESSIONAL ENGINEER
Gina D. Horner
06/03/25

DATE PREPARED	06/02/2025
ROUTE	I-70
STATE	MO
DISTRICT	BR
SHEET NO.	B06-06
COUNTY	JACKSON
JOB NO.	J4I1486D
CONTRACT ID.	240807-C01
PROJECT NO.	
BRIDGE NO.	A9620

DATE	DESCRIPTION
06/02/25	REV 0 - RFC SUBMITTAL

MISSOURI HIGHWAYS AND TRANSPORTATION COMMISSION
105 WEST CAPITOL
JEFFERSON CITY, MO 65102
1-888-ASK-MODOT (1-888-275-6636)

CLARKSON RADMACHER JOINT VENTURE
715 KIRK DRIVE
KANSAS CITY, MO 64105-1310
CERTIFICATE OF AUTHORITY NO. 001270

HNTB

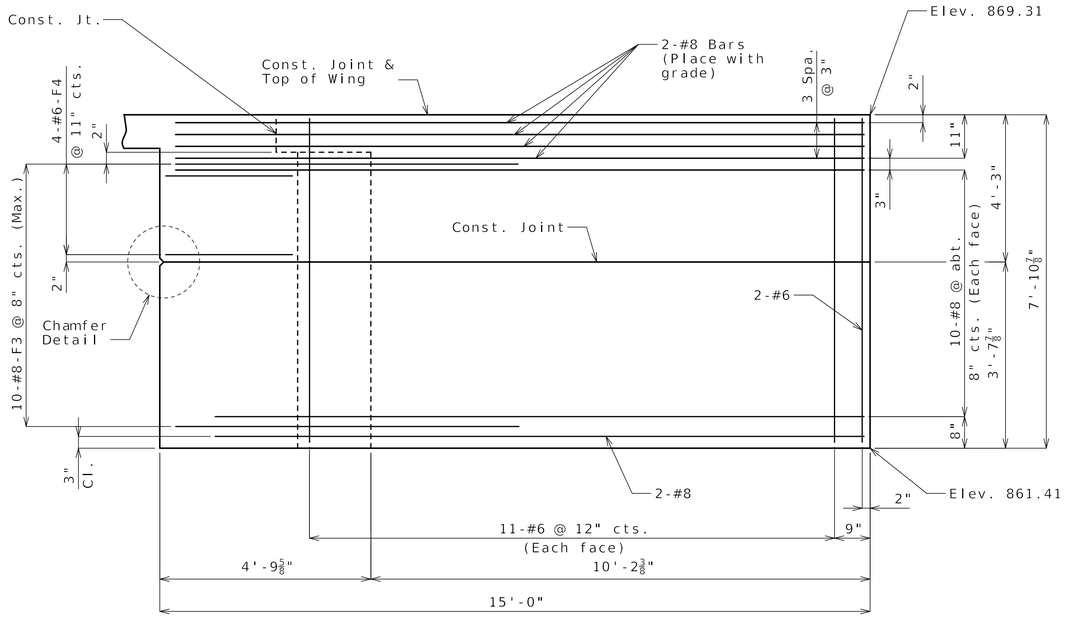

ELEVATION E-E

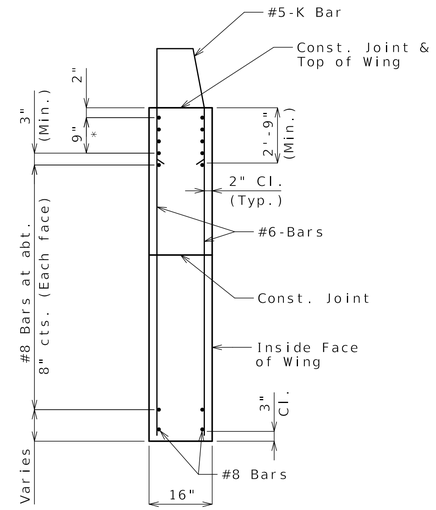

TYPICAL SECTION THRU WING

*#8 Bars at 3" cts. (Each face)(Place with grade)
See Elevation E-E for number of bars

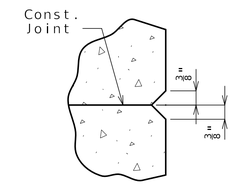

CHAMFER DETAIL

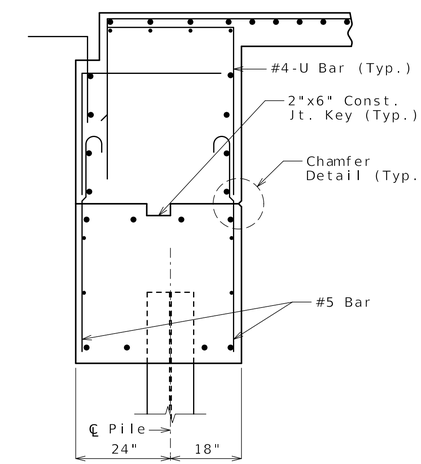

SECTION D-D

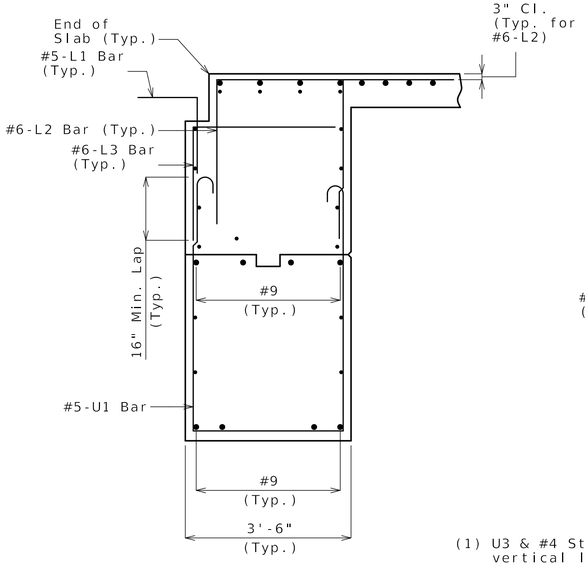

SECTION A-A

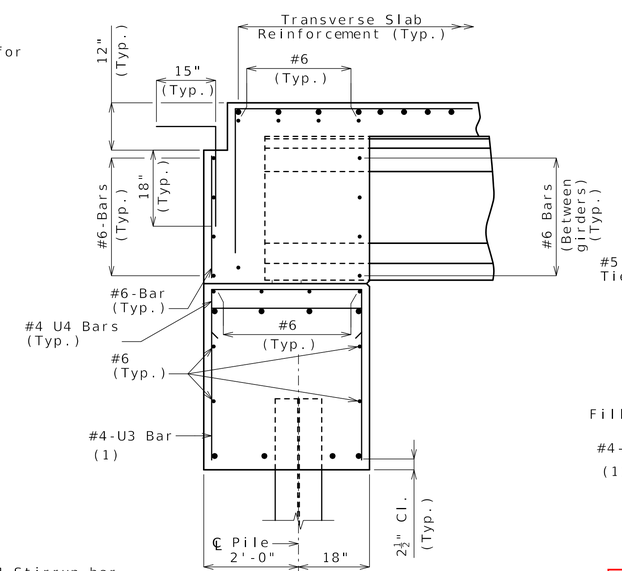

(1) U3 & #4 Stirrup bar vertical leg = 3'-1"

SECTION B-B

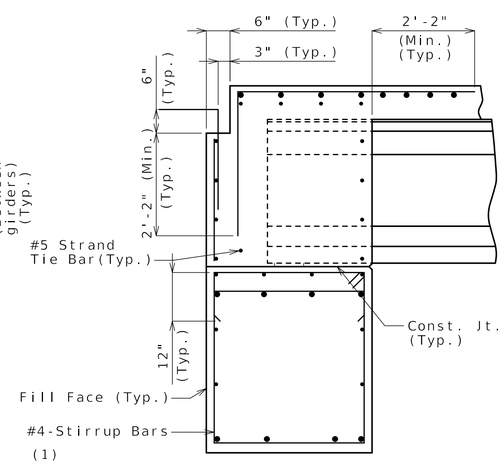

SECTION C-C

Released For Construction
Not to Scale
Revision: 0.0
Date: 06/09/2025
Package: BRD-06-WBRamp-Benton-Subst

General Notes:
Work this sheet with Sheets No. B06-05 and B06-06.
For location of Sections A-A, B-B, C-C, D-D and Elevation E-E, see Sheet B06-06.
For reinforcement of the Type D Barrier, see A9620 (I-70 WB On Ramp Over Benton) Superstructure Package.

DETAILS OF END BENT NO. 1

STATE OF MISSOURI
GINA D. HORNER
PE-30413
PROFESSIONAL ENGINEER
Gina D. Horner
06/03/25

DATE PREPARED	06/02/2025
ROUTE	I-70
STATE	MO
DISTRICT	BR
SHEET NO.	B06-07
COUNTY	JACKSON
JOB NO.	J4I1486D
CONTRACT ID.	240807-C01
PROJECT NO.	
BRIDGE NO.	A9620

DATE	DESCRIPTION
06/02/25	REV 0 - RFC SUBMITTAL

MISSOURI HIGHWAYS AND TRANSPORTATION COMMISSION
105 WEST CAPITOL
JEFFERSON CITY, MO 65102
1-888-ASK-MODOT (1-888-275-6636)

CLARKSON RADMACHER JOINT VENTURE
715 KIRK DRIVE
KANSAS CITY, MO 64105-1310
CERTIFICATE OF AUTHORITY NO. 001270

HNTB

Detailed FEB 2025
Checked MAR 2025

Note: This drawing is not to scale. Follow dimensions.

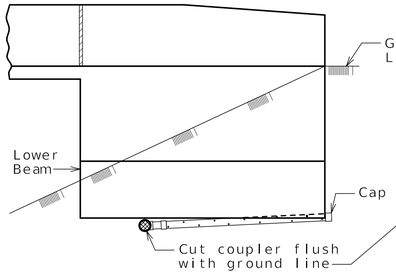

ELEVATION OF WING

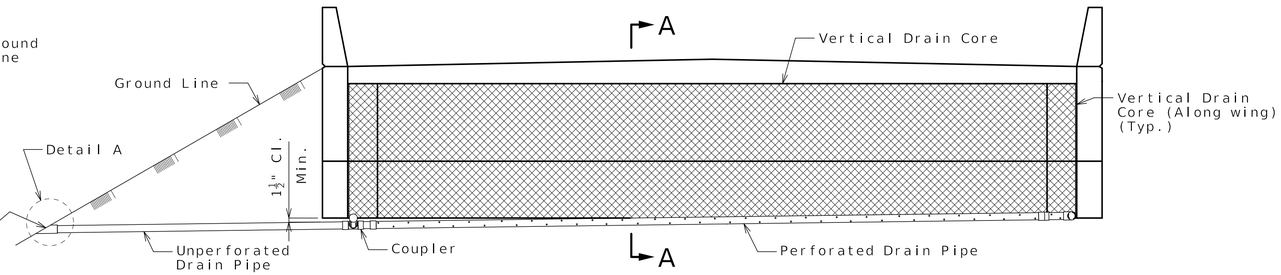

ELEVATION OF END BENT

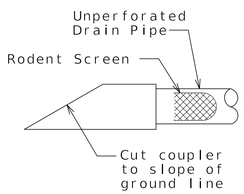

DETAIL A

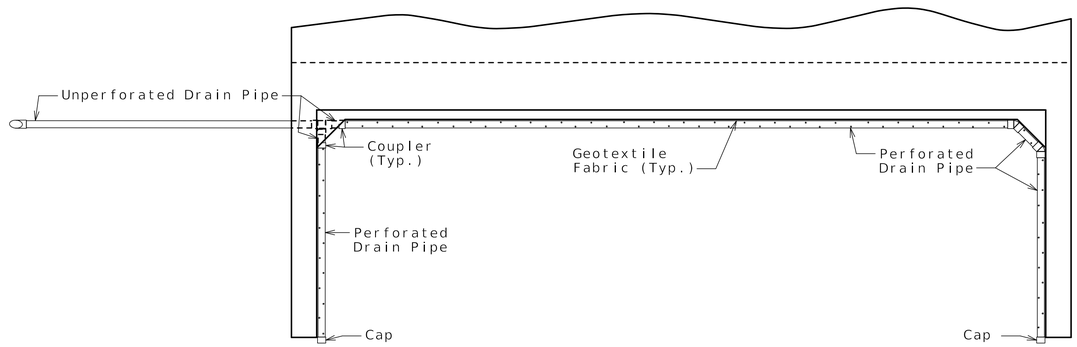

PLAN OF END BENT

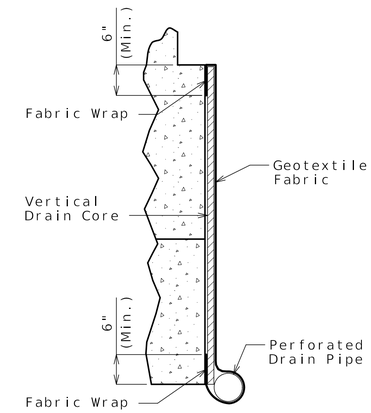

PART SECTION A-A
(Section thru wing similar)

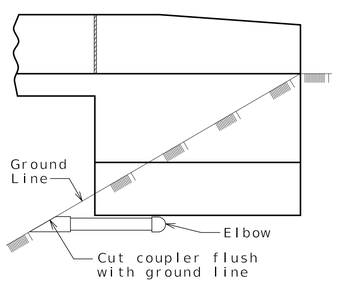

ELEVATION OF WING

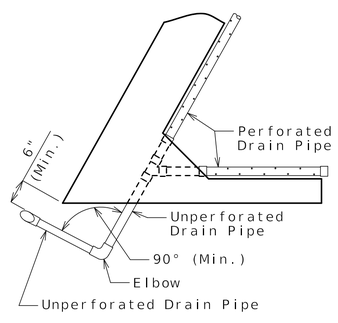

PART PLAN

OPTIONAL TURNED DRAIN
(Use only when straight drain is not practical.)

General Notes:

Details shown are illustrative and not necessarily representitive of one or both end bents on this bridge. Construction phasing and bridge geometry will require utilizing a combination of the details shown to construct a vertical drain system that maintains positive flow out and away from the end bents.

Square end bent shown, skewed end bent similar.

All drain pipe shall be sloped 1 to 2 percent.

Drain pipe may be either 6-inch diameter corrugated metallic-coated steel pipe underdrain, 4-inch diameter corrugated polyvinyl chloride (PVC) drain pipe, or 4-inch diameter corrugated polyethylene (PE) drain pipe.

Drain pipe shall be placed at fill face of end bent and inside face of wings. The pipe shall slope to lowest grade of ground line, also missing the lower beam of end bent by a minimum of 1 1/2 inches.

Perforated pipe shall be placed at fill face side and inside face of wings at the bottom of end bent and plain pipe shall be used where the vertical drain ends to the exit at ground line.

VERTICAL DRAIN AT END BENTS

Released For Construction
Not to Scale
Revision: 0.0
Date: 06/09/2025
Package: BRD-06-WBRamp-Benton-Subst

Detailed FEB 2025
Checked MAR 2025

Note: This drawing is not to scale. Follow dimensions.

STATE OF MISSOURI
GINA D. HORNER
PE-30413
PROFESSIONAL ENGINEER
Gina D. Horner
06/03/25

DATE PREPARED	06/02/2025
ROUTE	I-70
STATE	MO
DISTRICT	BR
SHEET NO.	B06-08
COUNTY	JACKSON
JOB NO.	J4I1486D
CONTRACT ID.	240807-C01
PROJECT NO.	
BRIDGE NO.	A9620

DATE	DESCRIPTION
06/02/25	REV 0 - RFC SUBMITTAL

MISSOURI HIGHWAYS AND TRANSPORTATION COMMISSION
105 WEST CAPITOL
JEFFERSON CITY, MO 65102
1-888-ASK-MODOT (1-888-275-6636)

CLARKSON RADMACHER JOINT VENTURE
715 KIRK DRIVE
KANSAS CITY, MO 64105-1310
CERTIFICATE OF AUTHORITY
NO. 001270

HNTB

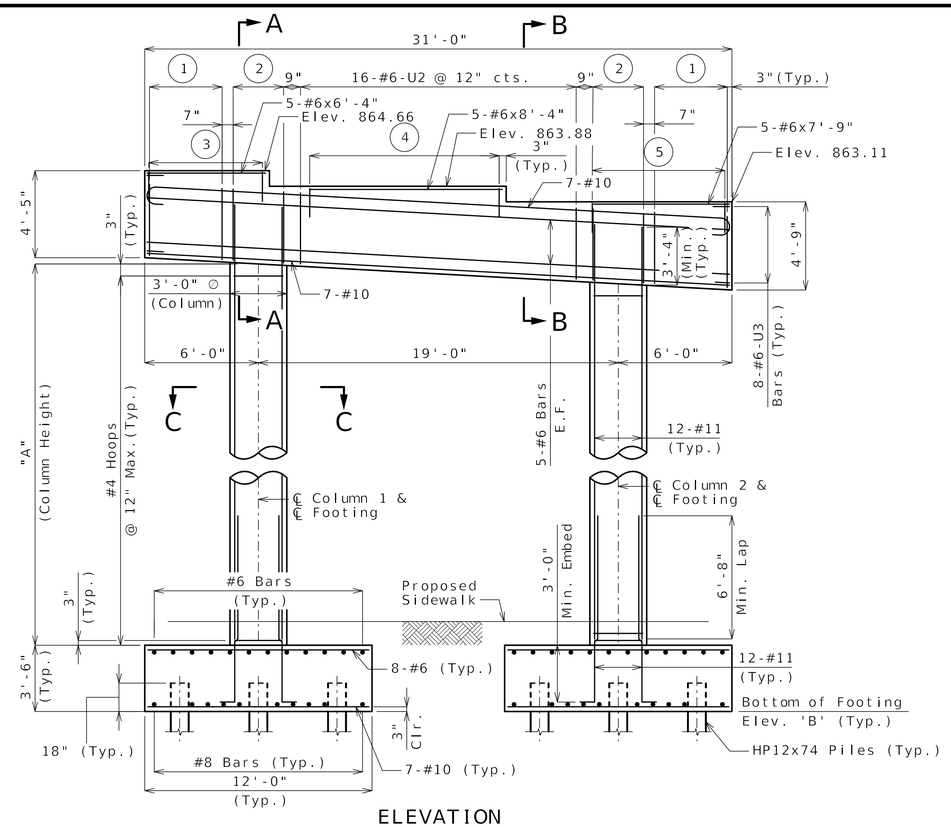

ELEVATION

Table of Variables		
Column Number	"A"	"B"
1	14'-10½"	841.50
2	14'-8⅝"	840.50

1. 8-#6-U2 @ Eq. Spa. = 3'-11"
2. 3-#6-U1 @ 15" cts.
3. 13-#4-U4 @ 6" Spa.
4. 17-#4-U4 @ 6" Spa.
5. 16-#4-U4 @ 6" Spa.

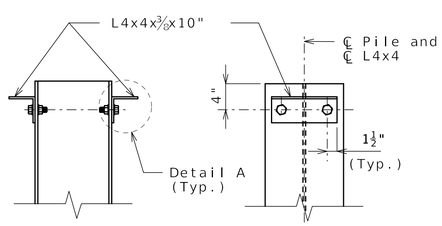

DETAILS OF HP PILE ANCHORS

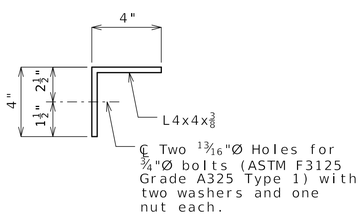

DETAIL A

Angles shall be coated with a minimum of two coats of non-aluminum epoxy mastic primer to provide a dry film thickness of 4 mils minimum, 8 mils maximum, or galvanized in accordance with Sec 1081. Bolts, washers and nuts shall be galvanized in accordance with AASHTO M 232 (ASTM A153), Class C.

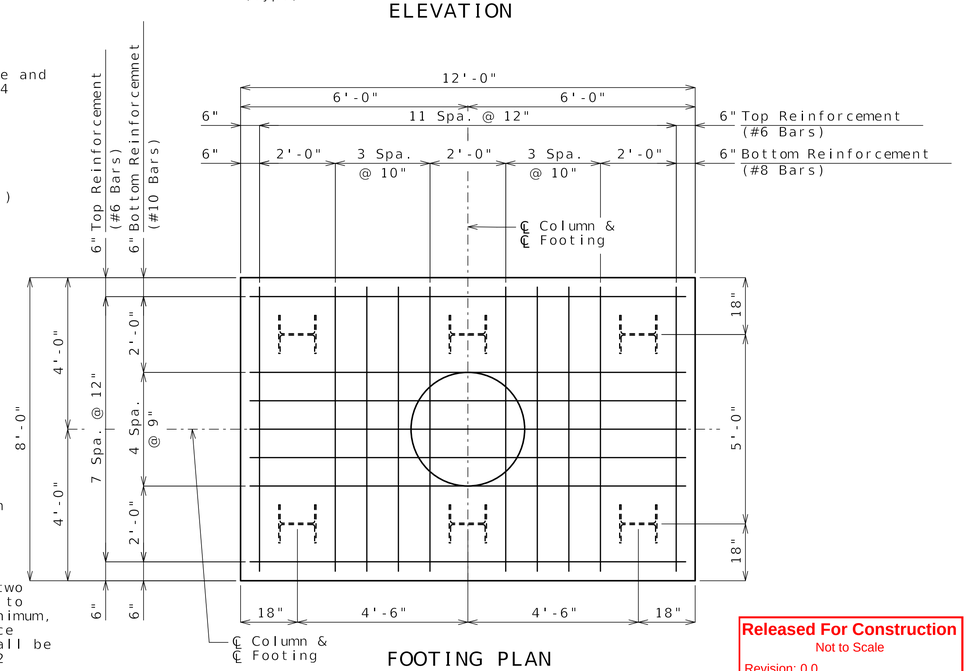

FOOTING PLAN

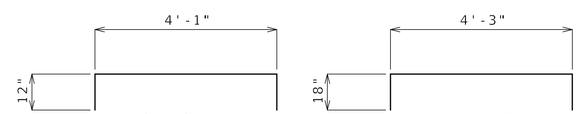

#6-U3 BAR #4-U4 BAR

Notes:
Prior to placing concrete for columns, position of vertical reinforcement shall be verified so as to provide clearance for capbeam reinforcement as applicable.
Work this sheet with Sheet No. B06-10.
For location of footings, see Sheet B06-04.
For Sections A-A thru C-C, see Sheet B06-10.
For Steel Pile Splice detail, see Sheet No. B06-05.

Released For Construction
Not to Scale
Revision: 0.0
Date: 06/09/2025
Package: BRD-06-WBRamp-Benton-Subst

DETAILS OF INTERMEDIATE BENT NO. 2

Detailed FEB 2025
Checked MAR 2025

Note: This drawing is not to scale. Follow dimensions.

STATE OF MISSOURI
WILLIAM JOSEPH STURGEON
PE-2014017021
PROFESSIONAL ENGINEER
6/3/2025

DATE PREPARED	06/02/2025
ROUTE	I-70
STATE	MO
DISTRICT	BR
SHEET NO.	B06-09
COUNTY	JACKSON
JOB NO.	J4I1486D
CONTRACT ID.	240807-C01
PROJECT NO.	
BRIDGE NO.	A9620

DATE	DESCRIPTION
06/02/25	REV 0 - RFC SUBMITTAL

MISSOURI HIGHWAYS AND TRANSPORTATION COMMISSION
105 WEST CAPITOL
JEFFERSON CITY, MO 65102
1-888-ASK-MODOT (1-888-275-6636)

CLARKSON RADMACHER JOINT VENTURE
715 KIRK DRIVE
KANSAS CITY, MO 64105-1310
CERTIFICATE OF AUTHORITY NO. 001270

HNTB

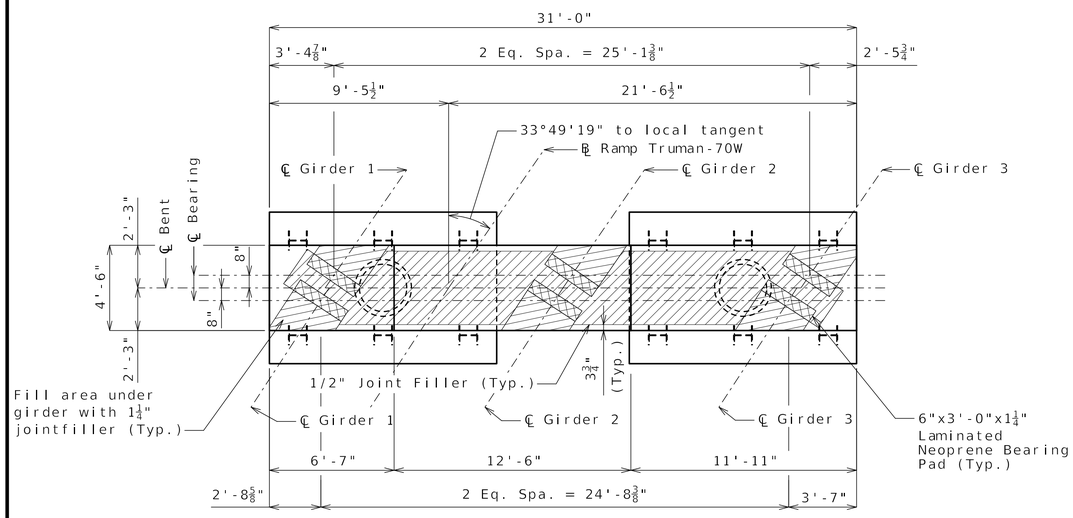

PLAN OF CAPBEAM

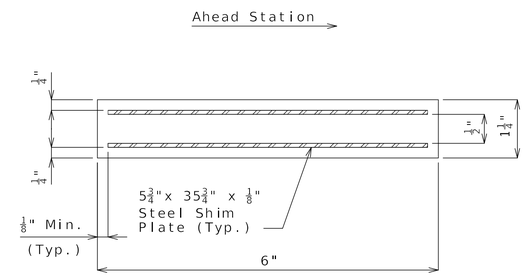

LAMINATED NEOPRENE BEARING PAD
(6 Required)

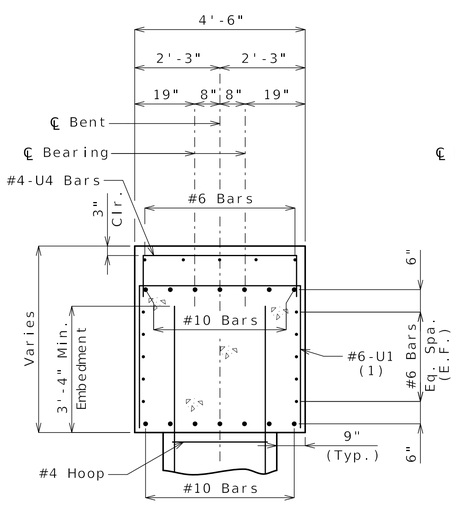

SECTION A-A

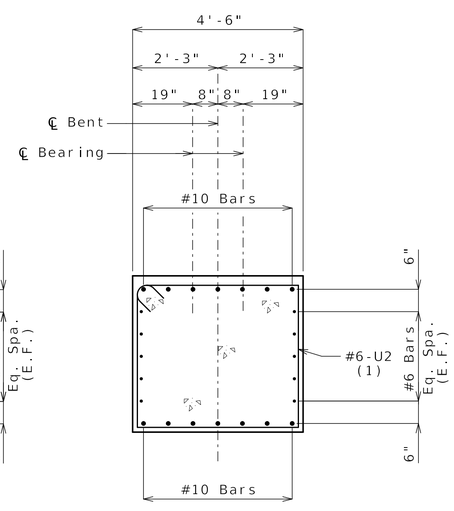

SECTION B-B

(1) U1 and U2 vertical leg = 3'-7 1/2"

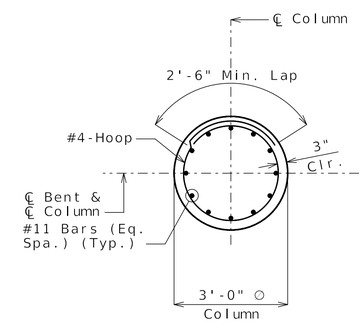

SECTION C-C

Notes:

Work this sheet with Sheet No. B06-09.

For angle of girders relative to ℄ Bent, see A9620 (I-70 WB On Ramp Over Benton) Superstructure Package.

For additional joint filler layout details, see concrete diaphragm details sheet in A9620 (I-70 WB On Ramp Over Benton) Superstructure Package.

For steps 2 inches or more, use 2 1/4"x1/2" inch joint filler up vertical face.

DETAILS OF INTERMEDIATE BENT NO. 2

Released For Construction
Not to Scale
Revision: 0.0
Date: 06/09/2025
Package: BRD-06-WBRamp-Benton-Subst

Detailed FEB 2025
Checked MAR 2025

Note: This drawing is not to scale. Follow dimensions.

STATE OF MISSOURI
WILLIAM JOSEPH STURGEON
PE-2014017021
PROFESSIONAL ENGINEER
6/3/2025

DATE PREPARED	06/02/2025
ROUTE	I-70
STATE	MO
DISTRICT	BR
SHEET NO.	B06-10
COUNTY	JACKSON
JOB NO.	J4I1486D
CONTRACT ID.	240807-C01
PROJECT NO.	
BRIDGE NO.	A9620

DATE	DESCRIPTION
06/02/25	REV 0 - RFC SUBMITTAL

MISSOURI HIGHWAYS AND TRANSPORTATION COMMISSION
105 WEST CAPITOL
JEFFERSON CITY, MO 65102
1-888-ASK-MODOT (1-888-275-6636)

CLARKSON RADMACHER JOINT VENTURE
715 KIRK DRIVE
KANSAS CITY, MO 64105-1310
CERTIFICATE OF AUTHORITY NO. 001270

HNTB

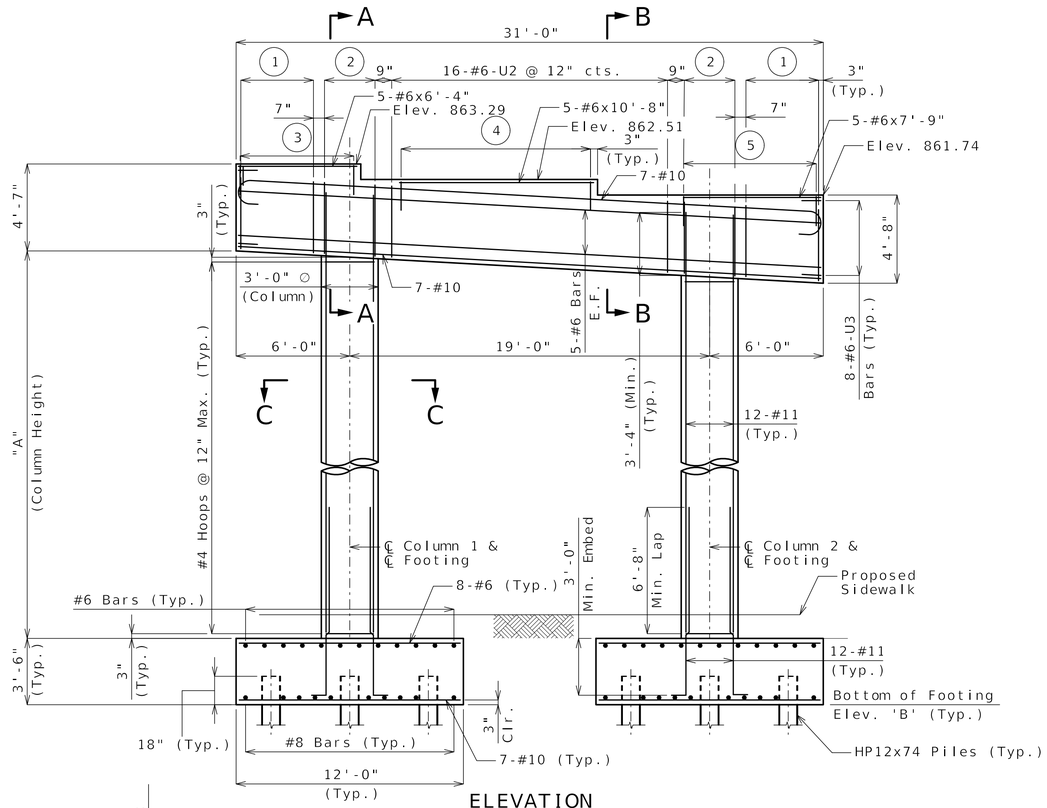

ELEVATION
(Beam keys not shown for clarity)

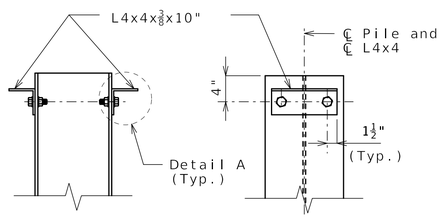

DETAILS OF HP PILE ANCHORS

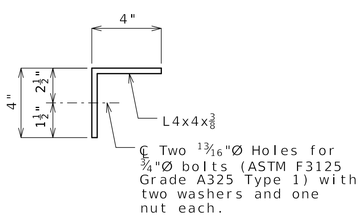

DETAIL A

Angles shall be coated with a minimum of two coats of non-aluminum epoxy mastic primer to provide a dry film thickness of 4 mils minimum, 8 mils maximum, or galvanized in accordance with Sec 1081. Bolts, washers and nuts shall be galvanized in accordance with AASHTO M 232 (ASTM A153), Class C.

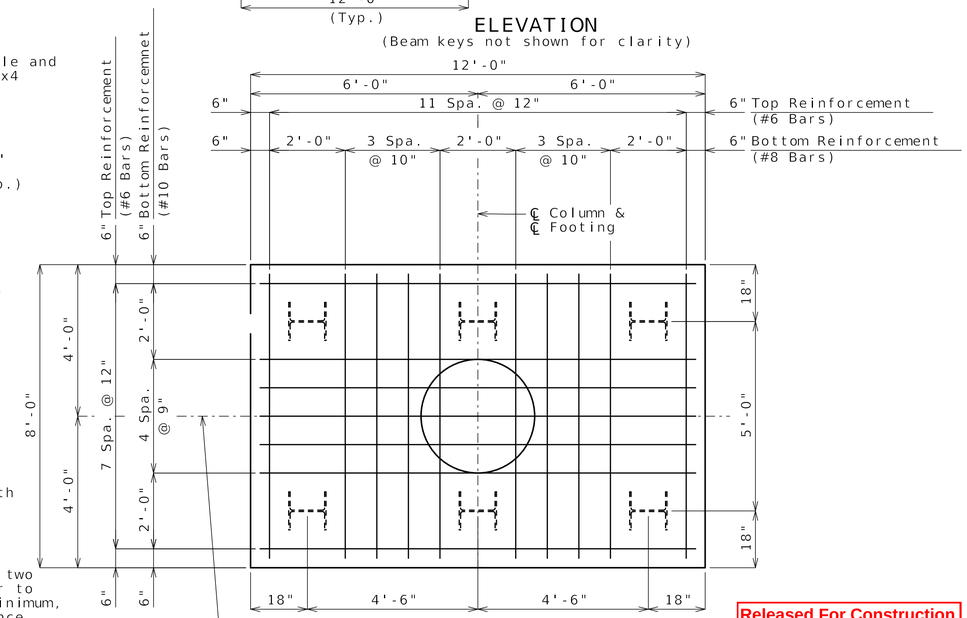

FOOTING PLAN

Table of Variables		
Column Number	"A"	"B"
1	15'-2¼"	839.70
2	15'-1"	838.80

1. 8-#6-U2 @ Eq. Spa. = 3'-11"
2. 3-#6-U1 @ 15" cts.
3. 13-#4-U4 @ 6" Spa.
4. 22-#4-U4 @ 6" Spa.
5. 16-#4-U4 @ 6" Spa.

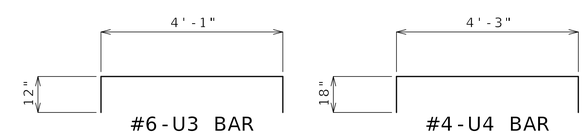

#6-U3 BAR #4-U4 BAR

Notes:
Prior to placing concrete for columns, position of vertical reinforcement shall be verified so as to provide clearance for capbeam reinforcement as applicable.
Work this sheet with Sheet No. B06-12.
For location of footings, see Sheet B06-04.
For Sections A-A thru C-C, see Sheet B06-12.
For Steel Pile Splice detail, see Sheet No. B06-05.

DETAILS OF INTERMEDIATE BENT NO. 3

Released For Construction
Not to Scale
Revision: 0.0
Date: 06/09/2025
Package: BRD-06-WBRamp-Benton-Subst

Detailed FEB 2025
Checked MAR 2025

Note: This drawing is not to scale. Follow dimensions.

STATE OF MISSOURI
WILLIAM JOSEPH STURGEON
PE-2014017021
PROFESSIONAL ENGINEER
6/3/2025

DATE PREPARED 06/02/2025
ROUTE I-70 | STATE MO
DISTRICT BR | SHEET NO. B06-11
COUNTY JACKSON
JOB NO. J4I1486D
CONTRACT ID. 240807-C01
PROJECT NO.
BRIDGE NO. A9620

DATE	DESCRIPTION
06/02/25	REV 0 - RFC SUBMITTAL

MISSOURI HIGHWAYS AND TRANSPORTATION COMMISSION
105 WEST CAPITOL
JEFFERSON CITY, MO 65102
1-888-ASK-MODOT (1-888-275-6636)

CLARKSON RADMACHER JOINT VENTURE
HNTB
715 KIRK DRIVE
KANSAS CITY, MO 64105-1310
CERTIFICATE OF AUTHORITY NO. 001270

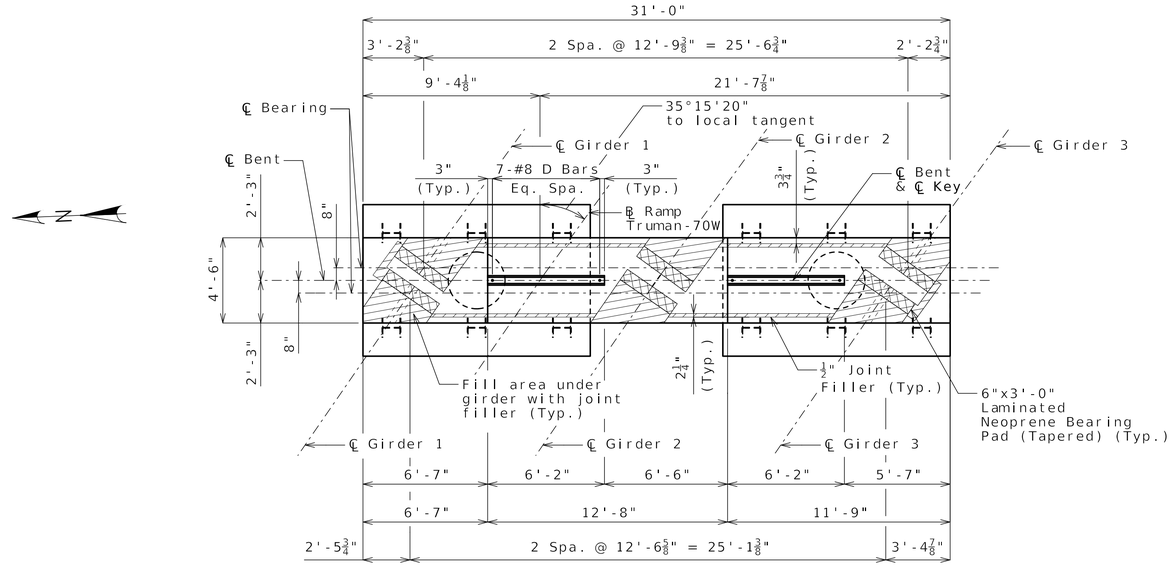

PLAN OF CAPBEAM

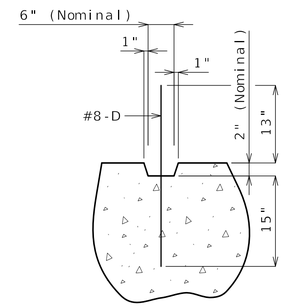

SECTION THRU KEY

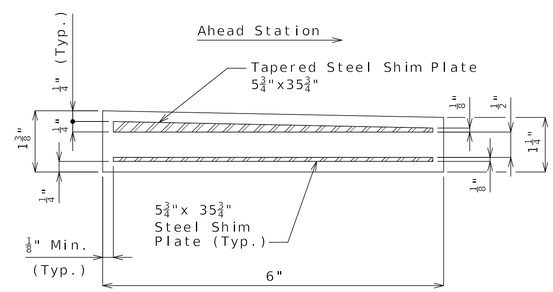

LAMINATED NEOPRENE
BEARING PAD (TAPERED)
(6 Required)

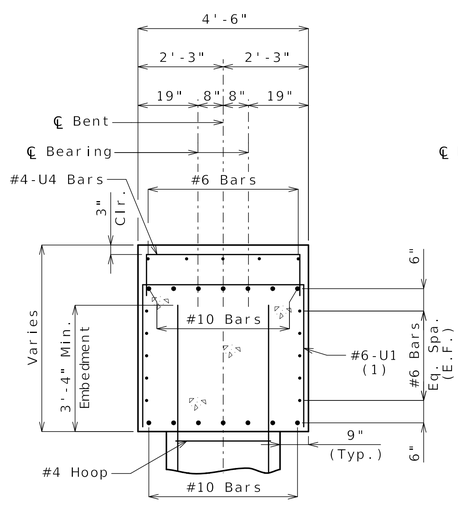

SECTION A-A

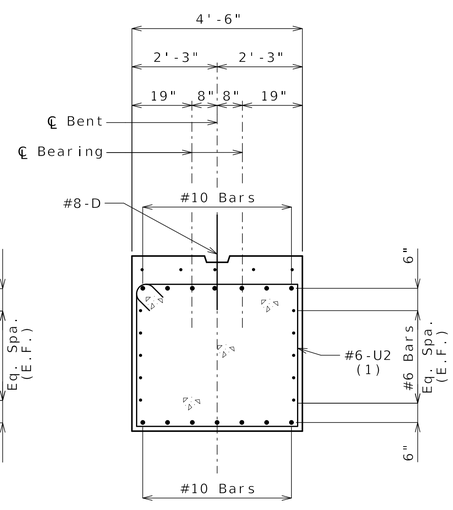

SECTION B-B

(1) U1 and U2 vertical leg = 3'-7 1/2"

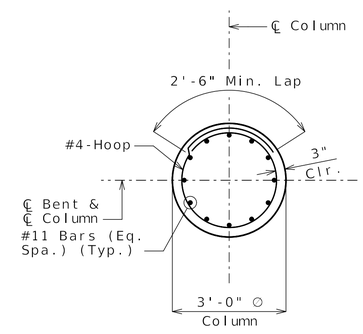

SECTION C-C

Notes:

Work this sheet with Sheet No. B06-11.

For angle of girders relative to ℄ Bent, see A9620 (I-70 WB On Ramp Over Benton) Superstructure Package.

For additional joint filler layout details, see concrete diaphragm details sheet in A9620 (I-70 WB On Ramp Over Benton) Superstructure Package.

For steps 2 inches or more, use 2 1/4"x1/2" inch joint filler up vertical face.

DETAILS OF INTERMEDIATE BENT NO. 3

Released For Construction
Not to Scale
Revision: 0.0
Date: 06/09/2025
Package: BRD-06-WBRamp-Benton-Subst

Detailed FEB 2025
Checked MAR 2025

Note: This drawing is not to scale. Follow dimensions.

STATE OF MISSOURI
WILLIAM JOSEPH STURGEON
PE-2014017021
PROFESSIONAL ENGINEER
6/3/2025

DATE PREPARED	06/02/2025
ROUTE	I-70
STATE	MO
DISTRICT	BR
SHEET NO.	B06-12
COUNTY	JACKSON
JOB NO.	J4I1486D
CONTRACT ID.	240807-C01
PROJECT NO.	
BRIDGE NO.	A9620

DATE	DESCRIPTION
06/02/25	REV 0 - RFC SUBMITTAL

MISSOURI HIGHWAYS AND TRANSPORTATION COMMISSION
105 WEST CAPITOL
JEFFERSON CITY, MO 65102
1-888-ASK-MODOT (1-888-275-6636)

CLARKSON RADMACHER JOINT VENTURE
715 KIRK DRIVE
KANSAS CITY, MO 64105-1310
CERTIFICATE OF AUTHORITY
NO. 001270

HNTB

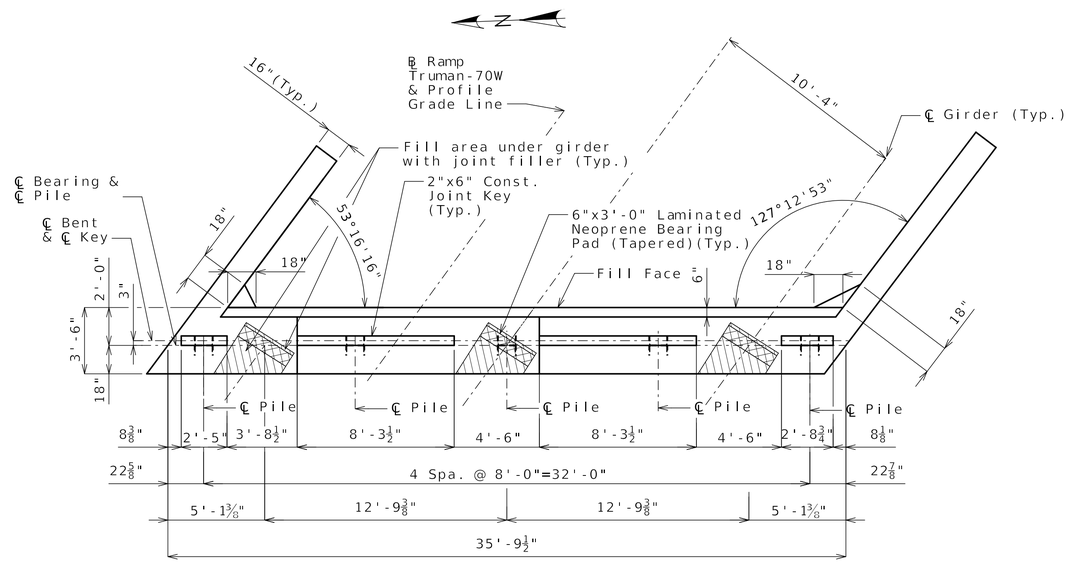

PLAN OF BEAM

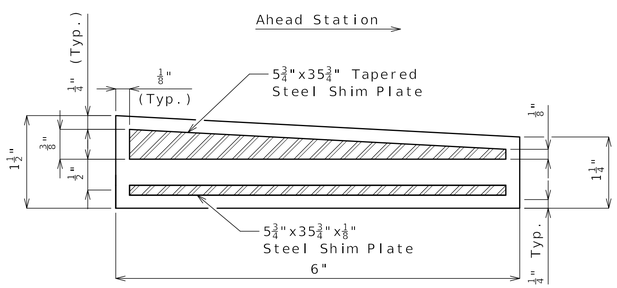

TYPICAL SECTION THRU LAMINATED NEOPRENE BEARING PAD (TAPERED)

3 Required

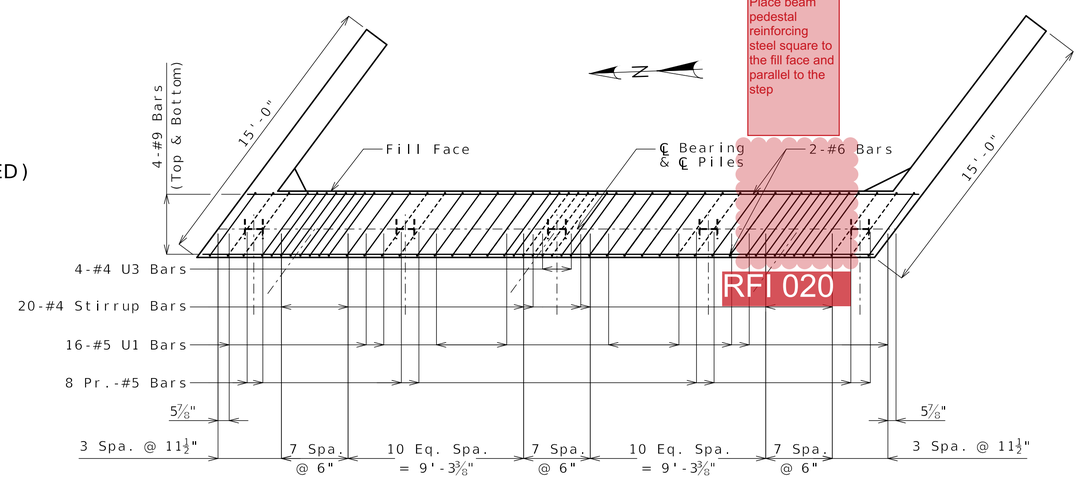

PLAN OF BEAM SHOWING REINFORCING
(Key and steps not shown for clarity)

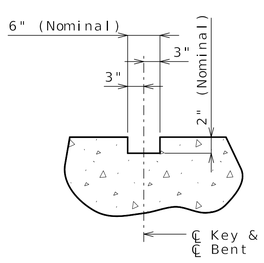

SECTION THRU KEY

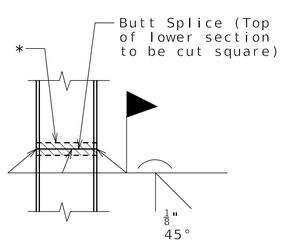

STEEL PILE SPLICE

(If required)

* Galvanizing material shall be omitted or removed one inch clear of weld locations in accordance with Sec 702.

Notes:

Work this sheet with Sheets No. B06-14 and B06-15.

All U bars and pairs of vertical bars shall be placed along skew.

Reinforcing steel shall be shifted to clear piles. U-bars shall clear piles by at least 1 1/2".

For details of bridge approach slab, see A9620 (I-70 WB On Ramp Over Benton) Superstructure Package.

For angle of girders relative to ℄ Bent, see A9620 (I-70 WB On Ramp Over Benton) Superstructure Package.

Released For Construction
Not to Scale
Revision: 0.0
Date: 06/09/2025
Package: BRD-06-WBRamp-Benton-Subst

DETAILS OF END BENT NO. 4

Detailed FEB 2025
Checked MAR 2025

Note: This drawing is not to scale. Follow dimensions.

STATE OF MISSOURI
GINA D. HORNER
PE-30413
PROFESSIONAL ENGINEER
Gina D. Horner
06/03/25

DATE PREPARED	
06/02/2025	
ROUTE	STATE
I-70	MO
DISTRICT	SHEET NO.
BR	B06-13
COUNTY	
JACKSON	
JOB NO.	
J4I1486D	
CONTRACT ID.	
240807-C01	
PROJECT NO.	
BRIDGE NO.	
A9620	

DATE	DESCRIPTION
06/02/25	REV 0 - RFC SUBMITTAL

MISSOURI HIGHWAYS AND TRANSPORTATION COMMISSION
105 WEST CAPITOL
JEFFERSON CITY, MO 65102
1-888-ASK-MODOT (1-888-275-6636)

CLARKSON RADMACHER JOINT VENTURE
715 KIRK DRIVE
KANSAS CITY, MO 64105-1310
CERTIFICATE OF AUTHORITY NO. 001270
HNTB

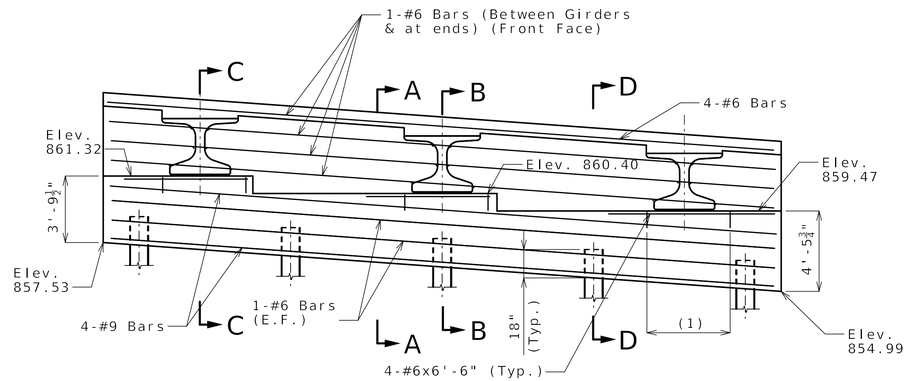

SECTION NEAR END BENT

(1) 8-#4-U4 Bars @ 6" Spa. under girders (Typ.)

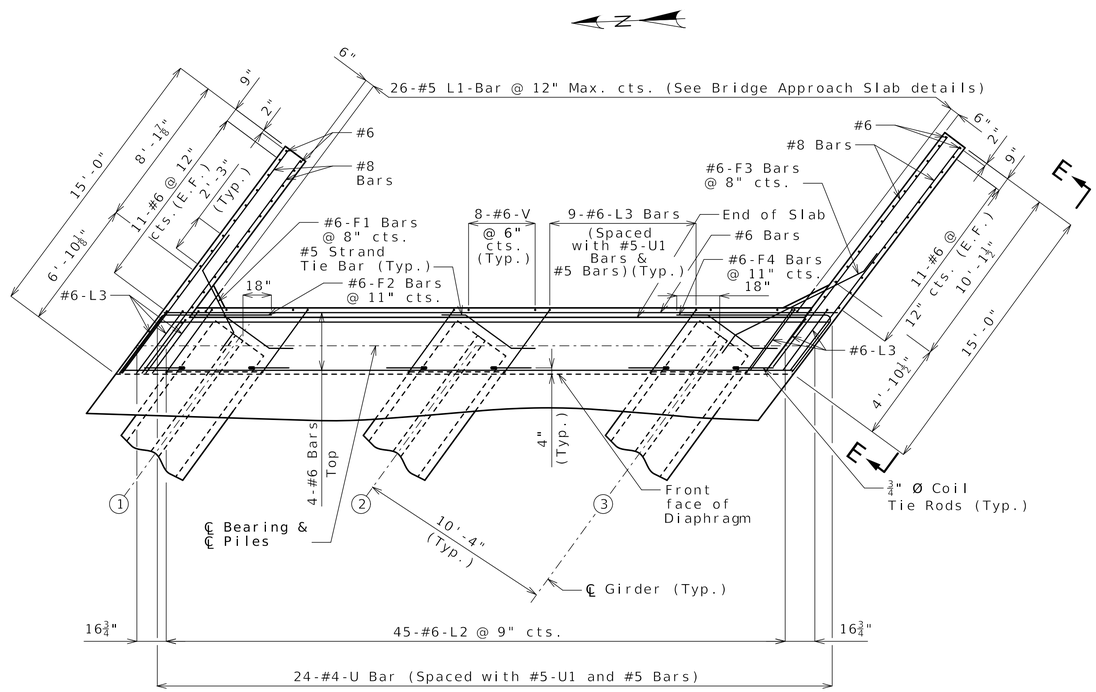

PART PLAN

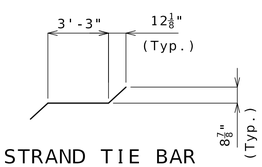

#5 STRAND TIE BAR

General Notes:

Work this sheet with Sheets No. B06-13 and B06-15. For Sections A-A, B-B, C-C and D-D and Elevation E-E, see Sheet No. B06-15.

For location of coil tie rods, see A9620 (I-70 WB On Ramp Over Benton) Superstructure Package.

Strands at end of the girders shall be field bent or, if necessary, cut in field to maintain 1½-inch minimum clearance to fill face of end bent.

The #6-F bars shall be bent in the field to clear girders.

(X) Denotes girder number

DETAILS OF END BENT NO.4

Released For Construction
Not to Scale
Revision: 0.0
Date: 06/09/2025
Package: BRD-06-WBRamp-Benton-Subst

Detailed FEB 2025
Checked MAR 2025

Note: This drawing is not to scale. Follow dimensions.

STATE OF MISSOURI — GINA D. HORNER PE-30413 — PROFESSIONAL ENGINEER
Gina D. Horner 06/03/25

DATE PREPARED	06/02/2025
ROUTE	I-70
STATE	MO
DISTRICT	BR
SHEET NO.	B06-14
COUNTY	JACKSON
JOB NO.	J4I1486D
CONTRACT ID.	240807-C01
PROJECT NO.	
BRIDGE NO.	A9620

DATE	DESCRIPTION
06/02/25	REV 0 - RFC SUBMITTAL

MISSOURI HIGHWAYS AND TRANSPORTATION COMMISSION
105 WEST CAPITOL
JEFFERSON CITY, MO 65102
1-888-ASK-MODOT (1-888-275-6636)

CLARKSON RADMACHER JOINT VENTURE
715 KIRK DRIVE
KANSAS CITY, MO 64105-1310
CERTIFICATE OF AUTHORITY NO. 001270

HNTB

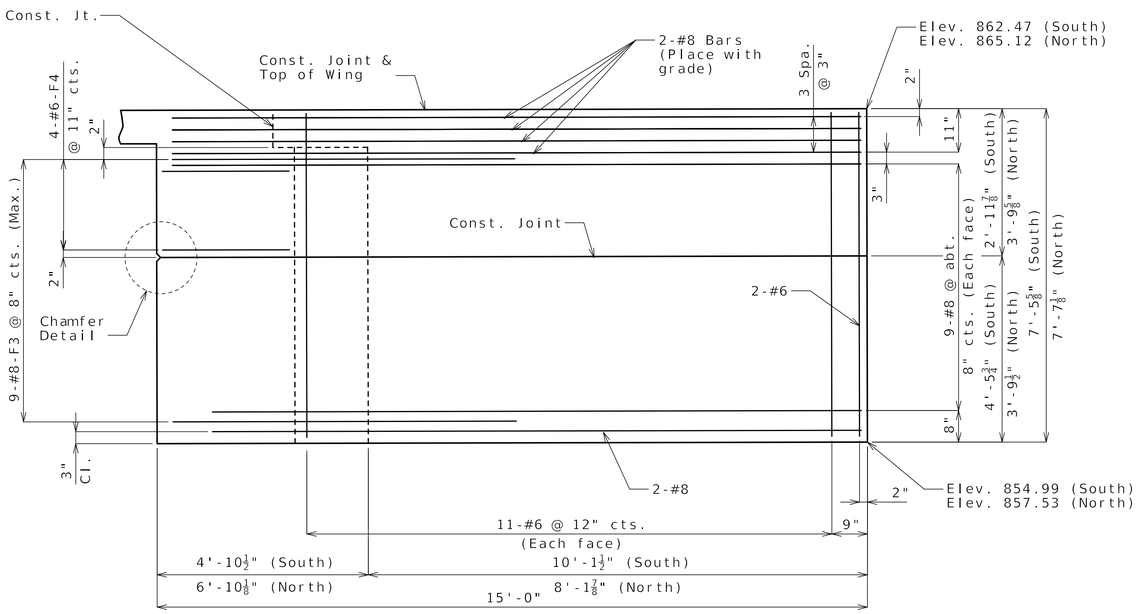

ELEVATION E-E

(South Wingwall shown, North wingwall similar except opposite hand)

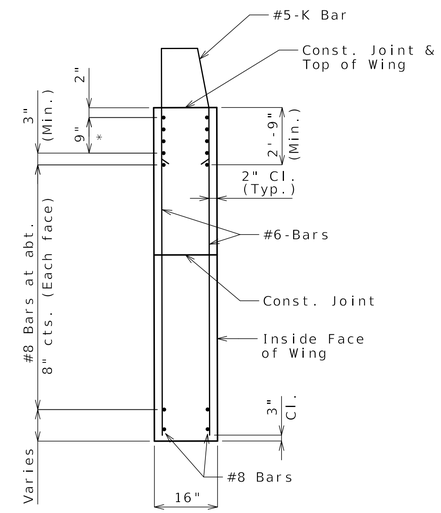

TYPICAL SECTION THRU WING

*#8 Bars at 3" cts. (Each face)(Place with grade)
See Elevation E-E for number of bars

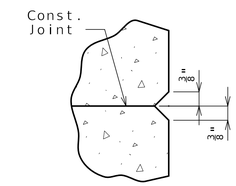

CHAMFER DETAIL

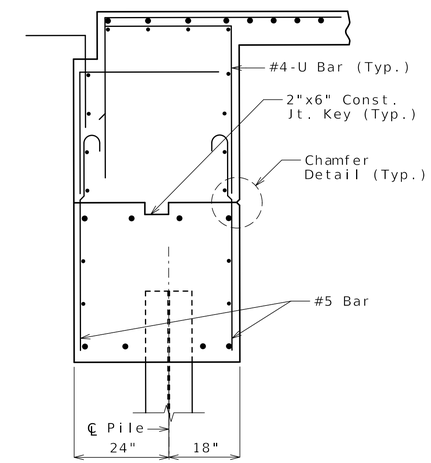

SECTION D-D

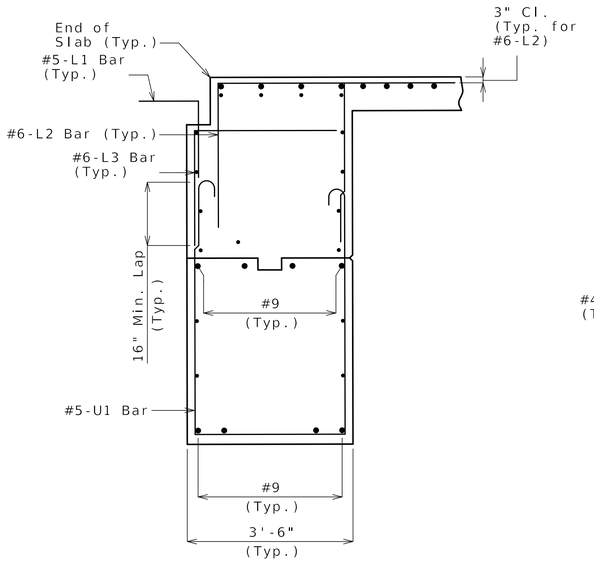

SECTION A-A

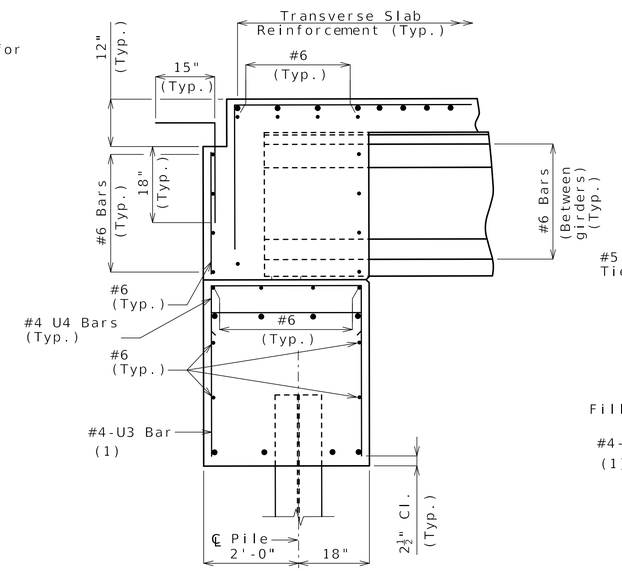

SECTION B-B

(1) U3 & #4 Stirrup bar vertical leg = 3'-1"

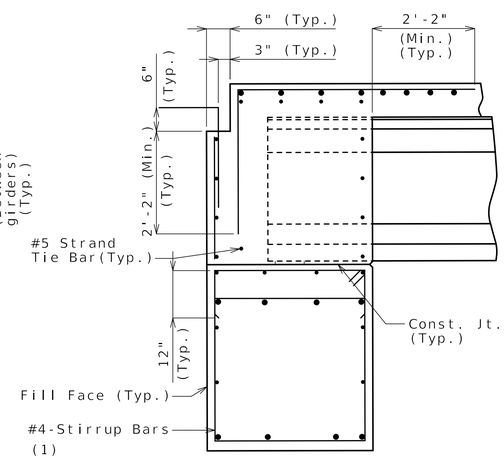

SECTION C-C

General Notes:
Work this sheet with Sheets B06-13 and B06-14.
For location of Sections A-A, B-B, C-C, D-D and Elevation E-E, see Sheet B06-14.
For reinforcement of the Type D Barrier, see A9620 (I-70 WB On Ramp Over Benton) Superstructure Package.

DETAILS OF END BENT NO. 4

Released For Construction
Not to Scale
Revision: 0.0
Date: 06/09/2025
Package: BRD-06-WBRamp-Benton-Subst

Detailed FEB 2025
Checked MAR 2025

Note: This drawing is not to scale. Follow dimensions.

STATE OF MISSOURI — GINA D. HORNER PE-30413 — PROFESSIONAL ENGINEER
Gina D. Horner 06/03/25

DATE PREPARED	06/02/2025
ROUTE	I-70
STATE	MO
DISTRICT	BR
SHEET NO.	B06-15
COUNTY	JACKSON
JOB NO.	J4I1486D
CONTRACT ID.	240807-C01
PROJECT NO.	
BRIDGE NO.	A9620

DATE	DESCRIPTION
06/02/25	REV 0 - RFC SUBMITTAL

MISSOURI HIGHWAYS AND TRANSPORTATION COMMISSION
105 WEST CAPITOL
JEFFERSON CITY, MO 65102
1-888-ASK-MODOT (1-888-275-6636)

CLARKSON RADMACHER JOINT VENTURE
715 KIRK DRIVE
KANSAS CITY, MO 64105-1310
CERTIFICATE OF AUTHORITY NO. 001270

HNTB

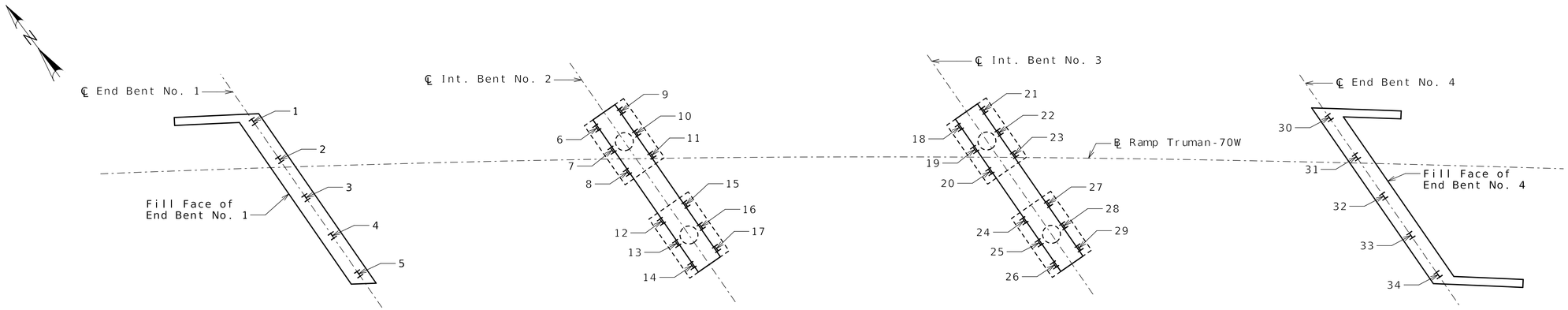

PART PLAN SHOWING PILE NUMBERING FOR RECORDING AS-BUILT PILE DATA

As-Built Pile Data			
Pile No.	Length in Place (ft)	Computed Nominal Axial Compressive Resistance (kips)	Remarks
			End Bent No. 1
1			
2			
3			
4			
5			
			Int. Bent No. 2
6			
7			
8			
9			
10			
11			
12			
13			
14			
15			
16			
17			

As-Built Pile Data			
Pile No.	Length in Place (ft)	Computed Nominal Axial Compressive Resistance (kips)	Remarks
			Int. Bent No. 3
18			
19			
20			
21			
22			
23			
24			
25			
26			
27			
28			
29			
			End Bent No. 4
30			
31			
32			
33			
34			

Note:

Indicate in remarks column:
A. Pile type and grade.
B. Batter
C. Driven to practical refusal

Released For Construction
Not to Scale
Revision: 0.0
Date: 06/09/2025
Package: BRD-06-WBRamp-Benton-Subst

Note:
This sheet to be completed by design-builder.

AS-BUILT PILE DATA

Detailed FEB 2025
Checked MAR 2025

Note: This drawing is not to scale. Follow dimensions.

STATE OF MISSOURI
GINA D. HORNER
PE-30413
PROFESSIONAL ENGINEER
Gina D. Horner
06/03/25

DATE PREPARED 06/02/2025

ROUTE	STATE
I-70	MO
DISTRICT	SHEET NO.
BR	B06-16

COUNTY: JACKSON
JOB NO.: J4I1486D
CONTRACT ID.: 240807-C01
PROJECT NO.:
BRIDGE NO.: A9620

DATE	DESCRIPTION
06/02/25	REV 0 - RFC SUBMITTAL

MISSOURI HIGHWAYS AND TRANSPORTATION COMMISSION
105 WEST CAPITOL
JEFFERSON CITY, MO 65102
1-888-ASK-MODOT (1-888-275-6636)

CLARKSON RADMACHER JOINT VENTURE
715 KIRK DRIVE
KANSAS CITY, MO 64105-1310
CERTIFICATE OF AUTHORITY
NO. 001270

HNTB

HNTB

SOIL BORING NUMBER: Ben_B1_3

Page 1 of 4

PROJECT Improve I 70 KC Design Build
NORTHING/EASTING 1066804.2 / 2776238.9
DRILLING FIRM PPI **DRILLER** Josh S.
DATE STARTED 12/05/2024
LOGGED BY Cameron Dupont/Zachary Boyd
DATE COMPLETED 12/09/2024
SURFACE ELEVATION 860.2'
RIG TYPE CME-550
METHOD Auger/Water Rotary/NQ Core
TOOLING 4-1/2" Continuous Flight Auger, 3-3/4" Rotary Drill

Groundwater Data	
During Drilling (ft):	43.7
After Drilling (ft):	41.2
After __ Hours (ft):	N/A

Depth (ft)	Depth of Sample	Sample Type	Sample ID	Recovery Length (in)	Blow Counts (N-Value)	% Recovery	RQD (%)	Pocket Pen (tsf)	Graphic Log	Visual Classification and Remarks	Atterberg Limits (LL-PL-PI)	Moisture Content (%)	Dry Density (PCF)	UCS (tsf)
										FILL, brown, stiff to very stiff, moist, LEAN CLAY (CL), organics				
	3.5 ft													
5		X	J-1	9	6-7-9 (16)	50		2.5						
	8 ft													
10		X	J-2	13	6-7-11 (18)	72		2.5			38-20-18	21.6		
										10.0 850.2				
										FILL, brown to reddish brown, loose, moist, WELL-GRADED SAND (SW), brick fragments				
	13 ft									13.2 847				
15		X	J-3	10	8-7-8 (15)	56		1.5		FILL, dark gray, stiff, moist, LEAN CLAY (CL), organics				
	18 ft													
20			U-1	17		71		2.0			35-18-17	15.3	101.8	1.43
										- becomes brown at 20'				
	23 ft													
25		X	J-4	7	3-2-2 (4)	39		2.0						
	28 ft													
30			U-2	24		100		1.0			32-20-12	18.3	102.6	3.61
										33.0 827.2				
	33 ft									Brown to gray, firm to soft, moist, LEAN CLAY (CL), organics, iron stain				
35		X	J-5	16	3-4-4 (8)	89		1.5						

HNTB

SOIL BORING NUMBER: Ben_B1_3

Page 2 of 4

PROJECT Improve I 70 KC Design Build
NORTHING/EASTING 1066804.2 / 2776238.9
DRILLING FIRM PPI **DRILLER** Josh S.
DATE STARTED 12/05/2024
LOGGED BY Cameron Dupont/Zachary Boyd
DATE COMPLETED 12/09/2024
SURFACE ELEVATION 860.2'
RIG TYPE CME-550
METHOD Auger/Water Rotary/NQ Core
TOOLING 4-1/2" Continuous Flight Auger, 3-3/4" Rotary Drill

Groundwater Data	
During Drilling (ft):	43.7
After Drilling (ft):	41.2
After __ Hours (ft):	N/A

Depth (ft)	Depth of Sample	Sample Type	Sample ID	Recovery Length (in)	Blow Counts (N-Value)	% Recovery	RQD (%)	Pocket Pen (tsf)	Graphic Log	Visual Classification and Remarks	Atterberg Limits (LL-PL-PI)	Moisture Content (%)	Dry Density (PCF)	UCS (tsf)
	38 ft									Brown to gray, firm to soft, moist, LEAN CLAY (CL), organics, iron stain				
40		X	J-6	18	2-1-3 (4)	100		0.5						
	43 ft													
45			U-3	24		100		<0.5			36-19-17	28.2	99.0	0.243
	48 ft													
50		X	J-7	17	2-4-3 (7)	94		0.5						
										53.0 807.2				
	53 ft									Reddish brown, stiff to very stiff, moist, LEAN CLAY (CL), organics, iron staining				
55		X	J-8	18	6-8-9 (17)	100		2.5						
	58 ft													
60		X	J-9	18	4-5-8 (13)	100		2.0						
65														
	68 ft													
70		X	J-10	18	4-6-7 (13)	100		2.5						

Released For Construction
Not to Scale
Revision: 0.0
Date: 06/09/2025
Package: BRD-06-WBRamp-Benton-Subst

Notes:
For locations of borings, see Sheet No. B06-02 and Geotechnical Report.

BORING LOGS

WILLIAM JOSEPH STURGEON PE-2014017021 STATE OF MISSOURI PROFESSIONAL ENGINEER
6/3/2025

DATE PREPARED	06/02/2025
ROUTE	I-70
STATE	MO
DISTRICT	BR
SHEET NO.	B06-17
COUNTY	JACKSON
JOB NO.	J4I1486D
CONTRACT ID.	240807-C01
PROJECT NO.	
BRIDGE NO.	A9620

DESCRIPTION	DATE
REV 0 - RFC SUBMITTAL	06/02/25

MISSOURI HIGHWAYS AND TRANSPORTATION COMMISSION
105 WEST CAPITOL
JEFFERSON CITY, MO 65102
1-888-ASK-MODOT (1-888-275-6636)

CLARKSON RADMACHER JOINT VENTURE
715 KIRK DRIVE
KANSAS CITY, MO 64105-1310
CERTIFICATE OF AUTHORITY NO. 001270

HNTB

Detailed FEB 2025
Checked MAR 2025

Note: This drawing is not to scale. Follow dimensions.

HNTB

SOIL BORING NUMBER: Ben_B1_3

Page 3 of 4

PROJECT Improve I 70 KC Design Build
NORTHING/EASTING 1066804.2 / 2776238.9
DRILLING FIRM PPI **DRILLER** Josh S.
DATE STARTED 12/05/2024
LOGGED BY Cameron Dupont/Zachary Boyd
DATE COMPLETED 12/09/2024
SURFACE ELEVATION 860.2'
RIG TYPE CME-550
METHOD Auger/Water Rotary/NQ Core
TOOLING 4-1/2" Continuous Flight Auger, 3-3/4" Rotary Drill

Groundwater Data	
During Drilling (ft):	43.7
After Drilling (ft):	41.2
After __ Hours (ft):	N/A

Depth (ft)	Depth of Sample	Sample Type	Sample ID	Recovery Length (in)	Blow Counts (N-Value)	% Recovery	RQD (%)	Pocket Pen (tsf)	Graphic Log	Visual Classification and Remarks	Lab: Atterberg Limits (LL-PL-PI)	Lab: Moisture Content (%)	Lab: Dry Density (PCF)	Lab: UCS (tsf)
										Reddish brown, stiff to very stiff, moist, LEAN CLAY (CL), organics, iron staining				
	78 ft		J-11	18	7-8-12 (20)	100		2.0		79.0 / 781.2				
80										Tan-brown , medium dense, moist, WELL-GRADED SAND with CLAY AND GRAVEL (SW), trace organics				
85														
	88 ft		J-12	17	8-11-11 (22)	94		<0.5						
90														
95														
100										102.0 / 758.2				
	103 ft		J-13	16	9-15-16 (31)	89		<0.25		Tan-brown , moist, POORLY GRADED SAND (SP), some clay, iron stained				
105														
	105.9 ft		C-1	49		98	90			106.9 / 753.3				
										Limestone, slightly weathered, dark gray to light gray		0.2	163.3	1611
110	110.1 ft		C-2	60		100	97							

HNTB

SOIL BORING NUMBER: Ben_B1_3

Page 4 of 4

PROJECT Improve I 70 KC Design Build
NORTHING/EASTING 1066804.2 / 2776238.9
DRILLING FIRM PPI **DRILLER** Josh S.
DATE STARTED 12/05/2024
LOGGED BY Cameron Dupont/Zachary Boyd
DATE COMPLETED 12/09/2024
SURFACE ELEVATION 860.2'
RIG TYPE CME-550
METHOD Auger/Water Rotary/NQ Core
TOOLING 4-1/2" Continuous Flight Auger, 3-3/4" Rotary Drill

Groundwater Data	
During Drilling (ft):	43.7
After Drilling (ft):	41.2
After __ Hours (ft):	N/A

Depth (ft)	Depth of Sample	Sample Type	Sample ID	Recovery Length (in)	Blow Counts (N-Value)	% Recovery	RQD (%)	Pocket Pen (tsf)	Graphic Log	Visual Classification and Remarks	Lab: Atterberg Limits (LL-PL-PI)	Lab: Moisture Content (%)	Lab: Dry Density (PCF)	Lab: UCS (tsf)
			C-2	60		100				Limestone, slightly weathered, dark gray to light gray		0.2	163.9	837
115	115.1 ft													
			C-3	10		100	100			115.9 / 744.3				
										Bottom of Boring at 115.9'				
										Piezometer installed at 50' 12/9/2024				
120														
125														
130														
135														
140														
145														

Released For Construction
Not to Scale
Revision: 0.0
Date: 06/09/2025
Package: BRD-06-WBRamp-Benton-Subst

Notes:
For locations of borings, see Sheet No. B06-02 and Geotechnical Report.

BORING LOGS

Detailed FEB 2025
Checked MAR 2025

Note: This drawing is not to scale. Follow dimensions.

STATE OF MISSOURI
WILLIAM JOSEPH STURGEON
PE-2014017021
PROFESSIONAL ENGINEER
6/3/2025

DATE PREPARED 06/02/2025
ROUTE I-70 | STATE MO
DISTRICT BR | SHEET NO. B06-18
COUNTY JACKSON
JOB NO. J4I1486D
CONTRACT ID. 240807-C01
PROJECT NO.
BRIDGE NO. A9620

DATE	DESCRIPTION
06/02/25	REV 0 - RFC SUBMITTAL

MISSOURI HIGHWAYS AND TRANSPORTATION COMMISSION
105 WEST CAPITOL
JEFFERSON CITY, MO 65102
1-888-ASK-MODOT (1-888-275-6636)

CLARKSON RADMACHER JOINT VENTURE
715 KIRK DRIVE
KANSAS CITY, MO 64105-1310
CERTIFICATE OF AUTHORITY NO. 001270

HNTB

HNTB

SOIL BORING NUMBER: Ben_B2_4

Page 1 of 3

PROJECT Improve I 70 KC Design Build
NORTHING/EASTING 1066775.2 / 2776281.1
DRILLING FIRM PPI **DRILLER** Ray A.
DATE STARTED 11/13/2024
LOGGED BY Alex Wen
DATE COMPLETED 11/14/2024
SURFACE ELEVATION 849.9'
RIG TYPE CME-55
METHOD Auger, Water Rotary, NQ Core
TOOLING 4-1/2" Continuous Flight Auger

Groundwater Data	
During Drilling (ft):	N/A
After Drilling (ft):	N/A
After __ Hours (ft):	N/A

Depth (ft)	Depth of Sample	Sample Type	Sample ID	Recovery Length (in)	Blow Counts (N-Value)	% Recovery	RQD (%)	Pocket Pen (tsf)	Graphic Log	Visual Classification and Remarks	Lab: Atterberg Limits (LL-PL-PI)	Lab: Moisture Content (%)	Lab: Dry Density (PCF)	Lab: UCS (tsf)
										FILL, dark brown, moist, LEAN TO FAT CLAY (CL-CH), few grass rootlets at surface				
										- bundled streetlight power cables, trace tree roots at 1.5'				
										2.0 847.9				
5	4.5 ft	X	J-1	3	5-6-6 (12)	17				FILL, brown, dry to moist, LEAN TO FAT CLAY (CL-CH), occasional red-brown mottling		13.7		
10	9.5 ft	X	J-2	3	2-4-4 (8)	17				- becomes moist at 9.5'				
										12.5 837.4				
15	13.3 ft	X	J-3	7	5-3-3 (6)	39		2.5		Brown, mottled gray, red-brown, soft, moist, LEAN CLAY with SILT (CL-ML)	49-19-30	25.2		
20	18.3 ft	X	J-4	18	x-2-1 (3)	100		0.25						
25	23.3 ft		U-1	23		96		0.25		- becomes gray mottled red-brown, very soft at 23.3'	35-18-17	28.4	97.2	0.652
	25.3 ft	X	J-5		WOH-WOH-WOH			0.25						
30	28.3 ft	X	J-6		1-1-2 (3)			0.5		- becomes soft at 28'				
35	33.3 ft		U-2	23		96		0.25				22.9	102.3	

HNTB

SOIL BORING NUMBER: Ben_B2_4

Page 2 of 3

PROJECT Improve I 70 KC Design Build
NORTHING/EASTING 1066775.2 / 2776281.1
DRILLING FIRM PPI **DRILLER** Ray A.
DATE STARTED 11/13/2024
LOGGED BY Alex Wen
DATE COMPLETED 11/14/2024
SURFACE ELEVATION 849.9'
RIG TYPE CME-55
METHOD Auger, Water Rotary, NQ Core
TOOLING 4-1/2" Continuous Flight Auger

Groundwater Data	
During Drilling (ft):	N/A
After Drilling (ft):	N/A
After __ Hours (ft):	N/A

Depth (ft)	Depth of Sample	Sample Type	Sample ID	Recovery Length (in)	Blow Counts (N-Value)	% Recovery	RQD (%)	Pocket Pen (tsf)	Graphic Log	Visual Classification and Remarks	Lab: Atterberg Limits (LL-PL-PI)	Lab: Moisture Content (%)	Lab: Dry Density (PCF)	Lab: UCS (tsf)
40	38.3 ft	X	J-7	18	2-3-3 (6)	100		1.0		Brown, firm, moist, LEAN CLAY (CL)				
										41.5 808.4				
45	43.3 ft		U-3	19		79		2.0		Orangish brown, stiff, moist, FAT CLAY (CH), minor gray-brown mottling, dark gray carbonaceous particles	42-16-26	24.7	101.0	1.7
50	48.3 ft	X	J-8	18	4-6-9 (15)	100		2.0						
55	53.3 ft	X	J-9	18	6-6-10 (16)	100		2.75		- becomes very stiff at 53.6'		18.2		
60	58.3 ft	X	J-10	18	4-5-7 (12)	100		2.5						
65										65.6 784.3				
										Orangish brown, medium dense, wet, fine to coarse grained, CLAYEY SAND (SC), few fine to coarse subangular gravel				
70	68.3 ft	X	J-11	18	14-9-8 (17)	100						16.9		

Released For Construction
Not to Scale
Revision: 0.0
Date: 06/09/2025
Package: BRD-06-WBRamp-Benton-Subst

Notes:
For locations of borings, see Sheet No. B06-02 and Geotechnical Report.

BORING LOGS

Detailed FEB 2025
Checked MAR 2025

Note: This drawing is not to scale. Follow dimensions.

STATE OF MISSOURI
WILLIAM JOSEPH STURGEON
PE-2014017021
PROFESSIONAL ENGINEER
6/3/2025

DATE PREPARED 06/02/2025
ROUTE I-70 | STATE MO
DISTRICT BR | SHEET NO. B06-19
COUNTY JACKSON
JOB NO. J4I1486D
CONTRACT ID. 240807-C01
PROJECT NO.
BRIDGE NO. A9620

DATE	DESCRIPTION
06/02/25	REV 0 - RFC SUBMITTAL

MISSOURI HIGHWAYS AND TRANSPORTATION COMMISSION
105 WEST CAPITOL
JEFFERSON CITY, MO 65102
1-888-ASK-MODOT (1-888-275-6636)

CLARKSON RADMACHER JOINT VENTURE
715 KIRK DRIVE
KANSAS CITY, MO 64105-1310
CERTIFICATE OF AUTHORITY NO. 001270

HNTB

SOIL BORING NUMBER: Ben_B2_4

Page 3 of 3

PROJECT Improve I 70 KC Design Build
NORTHING/EASTING 1066775.2 / 2776281.1
DRILLING FIRM PPI **DRILLER** Ray A.
DATE STARTED 11/13/2024
LOGGED BY Alex Wen
DATE COMPLETED 11/14/2024
SURFACE ELEVATION 849.9'
RIG TYPE CME-55
METHOD Auger, Water Rotary, NQ Core
TOOLING 4-1/2" Continuous Flight Auger

Groundwater Data	
During Drilling (ft):	N/A
After Drilling (ft):	N/A
After __ Hours (ft):	N/A

Depth (ft)	Depth of Sample	Sample Type	Sample ID	Recovery Length (in)	Blow Counts (N-Value)	% Recovery	RQD (%)	Pocket Pen (tsf)	Graphic Log	Visual Classification and Remarks	Lab: Atterberg Limits (LL-PL-PI)	Lab: Moisture Content (%)	Lab: Dry Density (PCF)	Lab: UCS (tsf)
75										Orangish brown, medium dense, wet, fine to coarse grained, CLAYEY SAND (SC), few fine to coarse subangular gravel				
	78.3 ft		J-12	9	11-10-14 (24)	50								
80										- possible cobbles/boulder at 81'				
85														
	88.3 ft		J-13	8	6-5-6 (11)	44				- gravel becomes subrounded/subangular at 88'		13.5		
90														
	94.42 ft									94.4 755.5				
95	95.2 ft		C-1	9		100	100			Limestone, slightly weathered, gray, hard				
			C-2	60		100	100			- becomes fresh at 95'				
100	100.2 ft		C-3	45.6		100	100							
										104.0 745.9				
105										Bottom of Boring at 104'				
										Boring backfilled with cuttings 11/14/2024				
110														

SOIL BORING NUMBER: Ben_B3_4

Page 1 of 3

PROJECT Improve I 70 KC Design Build
NORTHING/EASTING 1066729.2 / 2776345.2
DRILLING FIRM PPI **DRILLER** Eric P.
DATE STARTED 11/11/2024
LOGGED BY Zachary Boyd
DATE COMPLETED 11/13/2024
SURFACE ELEVATION 848.1'
RIG TYPE CME-550
METHOD Auger/Mud Rotary/NQ Core
TOOLING 4-1/2" Continuous Flight Auger, 3-3/4" Rotary Drill

Groundwater Data	
During Drilling (ft):	N/A
After Drilling (ft):	N/A
After __ Hours (ft):	N/A

Depth (ft)	Depth of Sample	Sample Type	Sample ID	Recovery Length (in)	Blow Counts (N-Value)	% Recovery	RQD (%)	Pocket Pen (tsf)	Graphic Log	Visual Classification and Remarks	Lab: Atterberg Limits (LL-PL-PI)	Lab: Moisture Content (%)	Lab: Dry Density (PCF)	Lab: UCS (tsf)
										Dark brown, firm, moist, LEAN CLAY (CL), organics, some gravel				
	3.5 ft		J-1	6	4-5-3 (8)	33		1.0						
5														
	8.5 ft		J-2	14	x-1-2 (3)	78		<0.5		- becomes soft at 8.5'	34-15-19	28.5		
10														
	13.5 ft		U-1	16		67		<0.5						
15														
	18.5 ft									18.5 829.6				
			J-3	18	x-1-2 (3)	100		<0.5		Dark brown, soft, moist, FAT CLAY (CH), some gravel, some iron staining		29.7		
20														
	23.5 ft		J-4	18	x-2-3 (5)	100		0.5		- becomes reddish brown to gray at 23.5'				
25														
	28.5 ft		U-2	24		100		0.5			33-18-15	25.2	99.7	0.594
30														
	33.5 ft		J-5	18	x-1-2 (3)	100		<0.5		- becomes soft, reddish brown at 33.5'				
35														

Released For Construction
Not to Scale
Revision: 0.0
Date: 06/09/2025
Package: BRD-06-WBRamp-Benton-Subst

Notes:
For locations of borings, see Sheet No. B06-02 and Geotechnical Report.

BORING LOGS

WILLIAM JOSEPH STURGEON PE-2014017021 STATE OF MISSOURI PROFESSIONAL ENGINEER
6/3/2025

DATE PREPARED	06/02/2025
ROUTE	I-70
STATE	MO
DISTRICT	BR
SHEET NO.	B06-20
COUNTY	JACKSON
JOB NO.	J4I1486D
CONTRACT ID.	240807-C01
PROJECT NO.	
BRIDGE NO.	A9620

DATE	DESCRIPTION
06/02/25	REV 0 - RFC SUBMITTAL

MISSOURI HIGHWAYS AND TRANSPORTATION COMMISSION
105 WEST CAPITOL
JEFFERSON CITY, MO 65102
1-888-ASK-MODOT (1-888-275-6636)

CLARKSON RADMACHER JOINT VENTURE
715 KIRK DRIVE
KANSAS CITY, MO 64105-1310
CERTIFICATE OF AUTHORITY NO. 001270
HNTB

Detailed FEB 2025
Checked MAR 2025

Note: This drawing is not to scale. Follow dimensions.

HNTB

SOIL BORING NUMBER: Ben_B3_4

PROJECT Improve I 70 KC Design Build
NORTHING/EASTING 1066729.2 / 2776345.2
DRILLING FIRM PPI **DRILLER** Eric P.
DATE STARTED 11/11/2024
LOGGED BY Zachary Boyd
DATE COMPLETED 11/13/2024
SURFACE ELEVATION 848.1'
RIG TYPE CME-550
METHOD Auger/Mud Rotary/NQ Core
TOOLING 4-1/2" Continuous Flight Auger, 3-3/4" Rotary Drill

Groundwater Data	
During Drilling (ft):	N/A
After Drilling (ft):	N/A
After __ Hours (ft):	N/A

Depth of Sample	Sample ID	Recovery Length (in)	Blow Counts (N-Value)	% Recovery	Pocket Pen (tsf)	Visual Classification and Remarks	Atterberg Limits (LL-PL-PI)	Moisture Content (%)	Dry Density (PCF)	UCS (tsf)
38.5 ft	J-6	18	3-4-6 (10)	100	2.0	Dark brown, soft, moist, FAT CLAY (CH), some gravel, some iron staining 38.5 809.6				
						Light reddish brown, firm to stiff, moist, LEAN CLAY (CL), organics				
43.5 ft	U-3	24		100	2.5		39-16-23	19.5	108.0	2.54
						- becomes reddish brown to gray at 45.5'				
48.5 ft	J-7	18	2-5-7 (12)	100	2.0					
53.5 ft	J-8	18	3-5-8 (13)	100	2.0					
58.5 ft	U-4	20		83	2.5	- with gravel at 58.5'	44-14-30	20.4	108.8	1.03
						68.5 779.6				
68.5 ft	J-9	18	8-12-15 (27)	100		Light to dark brown, stiff to very stiff, moist, fine to coarse grained, WELL-GRADED SAND (SW)				

HNTB

SOIL BORING NUMBER: Ben_B3_4

PROJECT Improve I 70 KC Design Build
NORTHING/EASTING 1066729.2 / 2776345.2
DRILLING FIRM PPI **DRILLER** Eric P.
DATE STARTED 11/11/2024
LOGGED BY Zachary Boyd
DATE COMPLETED 11/13/2024
SURFACE ELEVATION 848.1'
RIG TYPE CME-550
METHOD Auger/Mud Rotary/NQ Core
TOOLING 4-1/2" Continuous Flight Auger, 3-3/4" Rotary Drill

Groundwater Data	
During Drilling (ft):	N/A
After Drilling (ft):	N/A
After __ Hours (ft):	N/A

Depth of Sample	Sample ID	Recovery Length (in)	Blow Counts (N-Value)	% Recovery	RQD (%)	Pocket Pen (tsf)	Visual Classification and Remarks	Atterberg Limits (LL-PL-PI)	Moisture Content (%)	Dry Density (PCF)	UCS (tsf)
							Light to dark brown, stiff to very stiff, moist, fine to coarse grained, WELL-GRADED SAND (SW)				
77.5 ft	C-1	7		18	0		77.5 770.6				
							Light gray to pink to brown, loose, moist, gravel and boulders				
80.7 ft	C-2	6		10	0						
							- Boulder obstruction encountered from 77.5-85.7'. Drilled through the boulder and resumed coring at 91.8.'				
91.8 ft	C-3	50.4		100	100		91.8 756.3				
							Limestone, weathered, fine grained, light gray, moderately hard				
96 ft	C-4	60		100	98						
							- 1.5" to 2" clay seam at 99'				
101 ft	C-5	12		100	100		102.0 746.1				
							Bottom of Boring at 102'				
							Boring backfilled with grout and chips 11/13/2024				

Released For Construction
Not to Scale
Revision: 0.0
Date: 06/09/2025
Package: BRD-06-WBRamp-Benton-Subst

Notes:
For locations of borings, see Sheet No. B06-02 and Geotechnical Report.

BORING LOGS

WILLIAM JOSEPH STURGEON PE-2014017021 STATE OF MISSOURI PROFESSIONAL ENGINEER
6/3/2025

DATE PREPARED	06/02/2025
ROUTE	I-70
STATE	MO
DISTRICT	BR
SHEET NO.	B06-21
COUNTY	JACKSON
JOB NO.	J4I1486D
CONTRACT ID.	240807-C01
PROJECT NO.	
BRIDGE NO.	A9620

DATE	DESCRIPTION
06/02/25	REV 0 - RFC SUBMITTAL

MISSOURI HIGHWAYS AND TRANSPORTATION COMMISSION
105 WEST CAPITOL
JEFFERSON CITY, MO 65102
1-888-ASK-MODOT (1-888-275-6636)

CLARKSON RADMACHER JOINT VENTURE
715 KIRK DRIVE
KANSAS CITY, MO 64105-1310
CERTIFICATE OF AUTHORITY NO. 001270

HNTB

Detailed FEB 2025
Checked MAR 2025

Note: This drawing is not to scale. Follow dimensions.

HNTB

SOIL BORING NUMBER: Ben_B4_4

Page 1 of 3

PROJECT Improve I 70 KC DB Project [0]
NORTHING/EASTING 1066708.5 / 2776385.3
DRILLING FIRM PPI **DRILLER** Josh Starkey
DATE STARTED 11/06/2024
LOGGED BY Cameron Dupont
DATE COMPLETED 11/07/2024
SURFACE ELEVATION 845.7'
RIG TYPE CME-55LC
METHOD Hollow Stem Auger
TOOLING 4-1/4" Hollow Stem Auger

Groundwater Data	
During Drilling (ft):	N/A
After Drilling (ft):	N/A
After __ Hours (ft):	N/A

Depth (ft)	Depth of Sample	Sample Type	Sample ID	Recovery Length (in)	Blow Counts (N-Value)	% Recovery	RQD (%)	Pocket Pen (tsf)	Graphic Log	Visual Classification and Remarks	Lab: Atterberg Limits (LL-PL-PI)	Lab: Moisture Content (%)	Lab: Dry Density (PCF)	Lab: UCS (tsf)
										FILL, dark brown to brown, soft to firm, moist, LEAN CLAY with SAND (CL), trace organics				
	3.5 ft													
5		X	J-1	8	4-3-4 (7)	44		0.5			40-20-20	32.7		
	8 ft									8.0 837.7				
		X	J-2	13	3-4-5 (9)	72		1.5		Dark brown to brown, firm to stiff, moist, LEAN CLAY (CL), trace organics				
10														
	13 ft													
15			U-1	18		100		1.5						
	18 ft													
20		X	J-3	18	1-2-3 (5)	100		0.25		- becomes soft to firm at 18'				
	23 ft													
25		X	J-4	18	1-2-2 (4)	100		0.25				37.9		
	28 ft													
30			U-2	24		100		0.5			32-19-13	25.4	103.7	0.76
	33 ft									33.0 812.7				
35		X	J-5	14	4-5-7 (12)	78		3.0		Brownish gray, firm to stiff, moist, LEAN CLAY with SILT (CL-ML)				

HNTB

SOIL BORING NUMBER: Ben_B4_4

Page 2 of 3

PROJECT Improve I 70 KC DB Project [0]
NORTHING/EASTING 1066708.5 / 2776385.3
DRILLING FIRM PPI **DRILLER** Josh Starkey
DATE STARTED 11/06/2024
LOGGED BY Cameron Dupont
DATE COMPLETED 11/07/2024
SURFACE ELEVATION 845.7'
RIG TYPE CME-55LC
METHOD Hollow Stem Auger
TOOLING 4-1/4" Hollow Stem Auger

Groundwater Data	
During Drilling (ft):	N/A
After Drilling (ft):	N/A
After __ Hours (ft):	N/A

Depth (ft)	Depth of Sample	Sample Type	Sample ID	Recovery Length (in)	Blow Counts (N-Value)	% Recovery	RQD (%)	Pocket Pen (tsf)	Graphic Log	Visual Classification and Remarks	Lab: Atterberg Limits (LL-PL-PI)	Lab: Moisture Content (%)	Lab: Dry Density (PCF)	Lab: UCS (tsf)
	38 ft													
40		X	J-6	18	3-5-8 (13)	100		4.0		Brownish gray, firm to stiff, moist, LEAN CLAY with SILT (CL-ML)				
	43 ft													
45			U-3	19		79		2.0			38-14-24	20.3	109.1	2.74
	48 ft									48.0 797.7				
50		X	J-7		4-5-6 (11)			2.0		Brownish gray, firm to stiff, LEAN CLAY with SAND (CL), trace organics		21.2		
	53 ft													
55		X	J-8		4-6-8 (14)			3.0						
	58.3 ft									58.3 787.4				
60		X	J-9	18	13-20-25 (45)	100		2.5		Tan-brown, medium dense, WELL-GRADED SAND with CLAY (SW-SC)				
	63 ft									- becomes dense, fine to medium grained at 61.5'				
65		X	J-10	18	18-23-30 (53)	100		2.5				19.1		
	68.2 ft													
70		X	J-11		47-45-30 (75)					- limestone boulder at 68'				
										69.0 776.7				
										Tan-brown, dense, WELL-GRADED SAND (SW), with trace gravel				

Released For Construction
Not to Scale
Revision: 0.0
Date: 06/09/2025
Package: BRD-06-WBRamp-Benton-Subst

Notes:
For locations of borings, see Sheet No. B06-02 and Geotechnical Report.

BORING LOGS

PROFESSIONAL ENGINEER — STATE OF MISSOURI — WILLIAM JOSEPH STURGEON PE-2014017021
6/3/2025

DATE PREPARED	06/02/2025
ROUTE	I-70
STATE	MO
DISTRICT	BR
SHEET NO.	B06-22
COUNTY	JACKSON
JOB NO.	J4I1486D
CONTRACT ID.	240807-C01
PROJECT NO.	
BRIDGE NO.	A9620

DATE	DESCRIPTION
06/02/25	REV 0 - RFC SUBMITTAL

MISSOURI HIGHWAYS AND TRANSPORTATION COMMISSION
105 WEST CAPITOL
JEFFERSON CITY, MO 65102
1-888-ASK-MODOT (1-888-275-6636)

CLARKSON RADMACHER JOINT VENTURE
715 KIRK DRIVE
KANSAS CITY, MO 64105-1310
CERTIFICATE OF AUTHORITY
NO. 001270

HNTB

Detailed FEB 2025
Checked MAR 2025

Note: This drawing is not to scale. Follow dimensions.

HNTB

SOIL BORING NUMBER: Ben_B4_4

PROJECT Improve I 70 KC DB Project [0]
NORTHING/EASTING 1066708.5 / 2776385.3
DRILLING FIRM PPI **DRILLER** Josh Starkey
DATE STARTED 11/06/2024
LOGGED BY Cameron Dupont
DATE COMPLETED 11/07/2024
SURFACE ELEVATION 845.7'
RIG TYPE CME-55LC
METHOD Hollow Stem Auger
TOOLING 4-1/4" Hollow Stem Auger

Groundwater Data	
During Drilling (ft):	N/A
After Drilling (ft):	N/A
After __ Hours (ft):	N/A

Depth (ft)	Depth of Sample	Sample Type	Sample ID	Recovery Length (in)	Blow Counts (N-Value)	% Recovery	RQD (%)	Pocket Pen (tsf)	Graphic Log	Visual Classification and Remarks	Atterberg Limits (LL-PL-PI)	Moisture Content (%)	Dry Density (PCF)	UCS (tsf)
										Tan-brown, dense, WELL-GRADED SAND (SW), with trace gravel				
	78 ft		J-12	18	13-39-33 (72)	100				- limestone boulder at 78'				
80										78.8 766.9 Tan-brown, fine to coarse grained, WELL-GRADED SAND with GRAVEL (SW)				
85														
	88 ft		J-13	9	7-7-7 (14)	50				- becomes coarse at 88'		21.9		
90	91 ft		C-1	48		100	100			91.0 754.7 Limestone, slightly weathered, light gray, moderately hard to hard, thin shale lens's interbedded				
95	95 ft		C-2	60		100	92			- SPT refusal at 91'				
100	100 ft		C-3	12		100	100			101.0 744.7 Bottom of Boring at 101'				
105										Boring backfilled with cuttings 11/7/2024				
110														

Notes:
For locations of borings, see Sheet No. B06-02 and Geotechnical Report.

BORING LOGS

Released For Construction
Not to Scale
Revision: 0.0
Date: 06/09/2025
Package: BRD-06-WBRamp-Benton-Subst

Detailed FEB 2025
Checked MAR 2025

Note: This drawing is not to scale. Follow dimensions.

STATE OF MISSOURI
WILLIAM JOSEPH STURGEON
PE-2014017021
PROFESSIONAL ENGINEER
6/3/2025

DATE PREPARED 06/02/2025
ROUTE I-70 STATE MO
DISTRICT BR SHEET NO. B06-23
COUNTY JACKSON
JOB NO. J4I1486D
CONTRACT ID. 240807-C01
PROJECT NO.
BRIDGE NO. A9620

DATE	DESCRIPTION
06/02/25	REV 0 - RFC SUBMITTAL

MISSOURI HIGHWAYS AND TRANSPORTATION COMMISSION
105 WEST CAPITOL
JEFFERSON CITY, MO 65102
1-888-ASK-MODOT (1-888-275-6636)

CLARKSON RADMACHER JOINT VENTURE
715 KIRK DRIVE
KANSAS CITY, MO 64105-1310
CERTIFICATE OF AUTHORITY NO. 001270
HNTB