06/10/2025
Released for Construction

SEC/SUR 30 TWP 47N RGE 2E

(51.8' - 109.0' - 79.3' - 58.7') PRESTRESSED CONCRETE NU-GIRDER SPANS

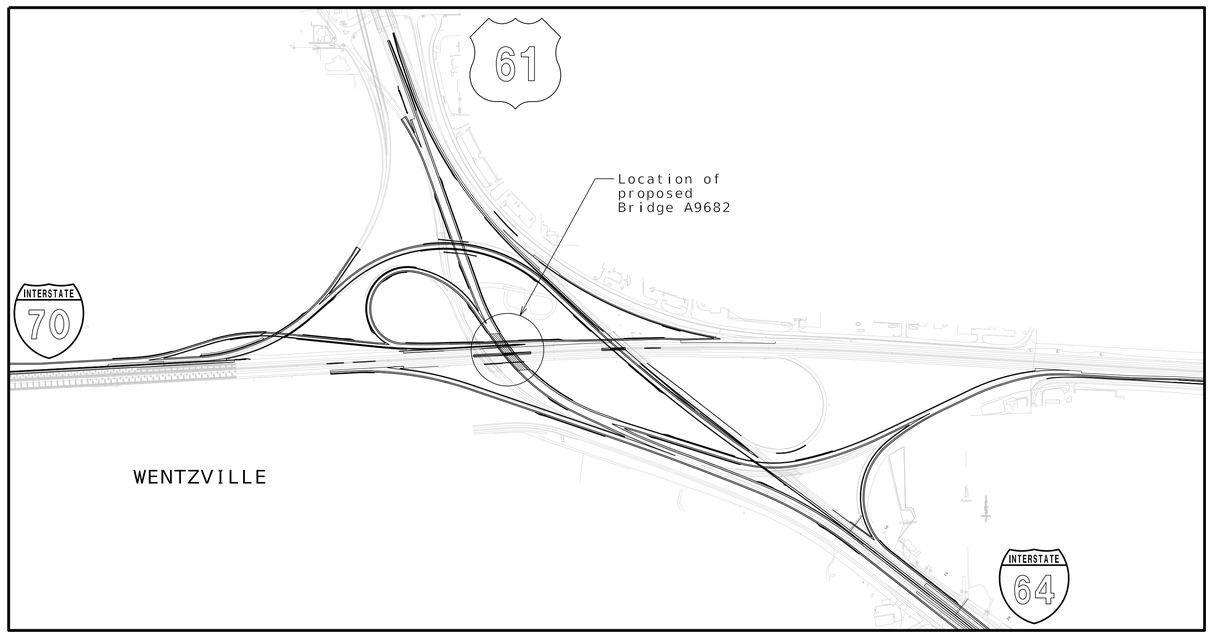

LOCATION MAP

INDEX OF DRAWINGS

BRIDGE: ROUTE 61S OVER I-70

ROUTE 61 FROM ROUTE A TO ROUTE N
ABOUT 1.3 MILES SOUTH OF ROUTE A
BEGINNING STATION 386+15.95

Designed JUN 2025
Detailed JUN 2025
Checked JUN 2025

Note: This drawing is not to scale. Follow dimensions.

STATE OF MISSOURI
DAVID MORANDEIRA
NUMBER PE-2021035906
PROFESSIONAL ENGINEER

THIS SHEET HAS BEEN SIGNED, SEALED AND DATED ELECTRONICALLY.

DATE PREPARED 6/9/2025

ROUTE	STATE
US-61	MO
DISTRICT	SHEET NO.
BR	A9682-1

COUNTY ST. CHARLES
JOB NO. JST0020
CONTRACT ID.
PROJECT NO.
BRIDGE NO. A9682

DATE	DESCRIPTION

MISSOURI HIGHWAYS AND TRANSPORTATION COMMISSION
105 WEST CAPITOL
JEFFERSON CITY, MO 65102
1-888-ASK-MODOT (1-888-275-6636)

HNTB
715 KIRK DRIVE
KANSAS CITY, MO 64105-1310
CERTIFICATE OF AUTHORITY NO. 001270

IMPROVE 70 ALLIANCE

Bartlett & West
601 MONROE ST., SUITE 201 - JEFFERSON CITY, MO 65101
PHONE: 573-634-2022 FAX: 573-634-2026
CERTIFICATE OF AUTHORITY NO. 000117 - ENGINEERING
WWW.BARTLETTWEST.COM

06/10/2025
Released for Construction

(51.8' - 109.0' - 79.3' - 58.7') PRESTRESSED CONCRETE NU-GIRDER SPANS

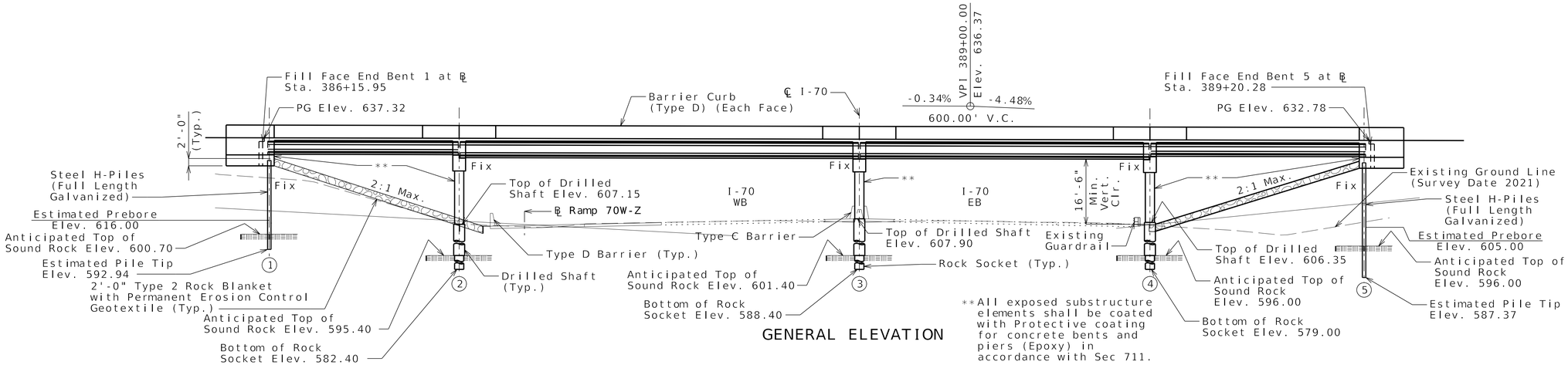

**All exposed substructure elements shall be coated with Protective coating for concrete bents and piers (Epoxy) in accordance with Sec 711.

GENERAL ELEVATION

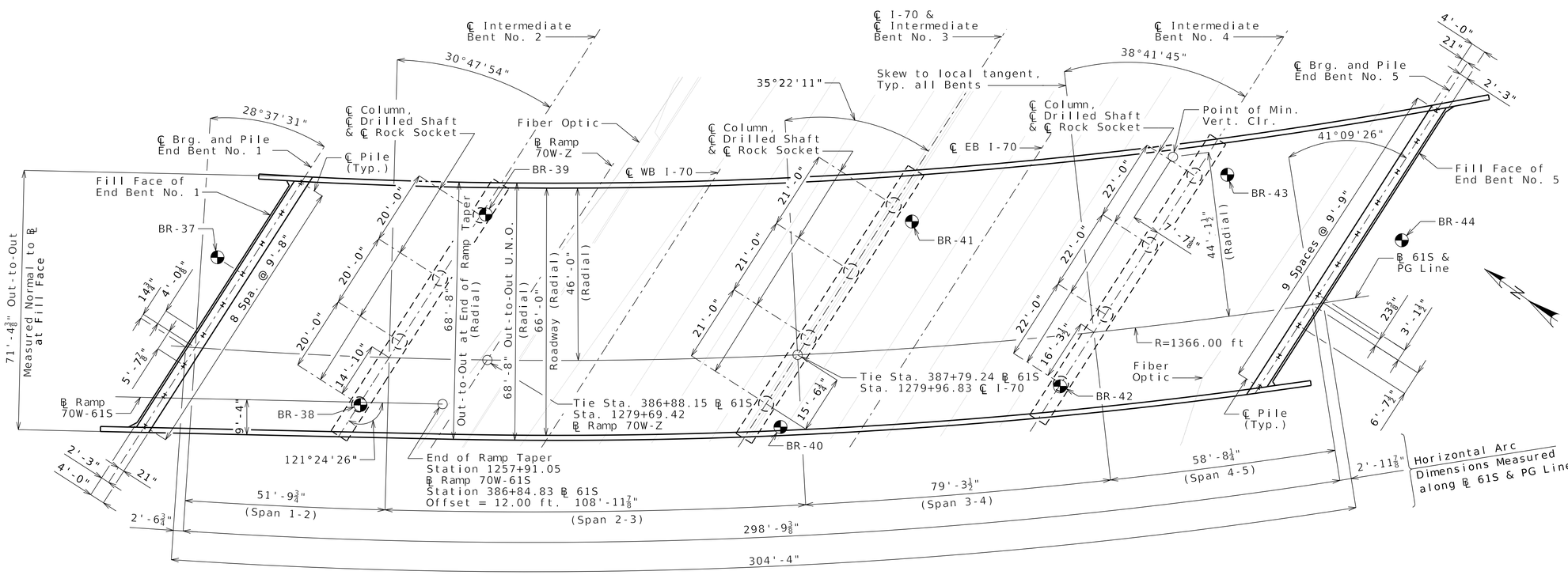

PLAN

Indicates location of post-award borings.

Notice and Disclaimer Regarding Boring Log Data

The locations of all subsurface borings for this structure are shown above. These borings are depicted in profile on Sheet No. 40. The logs, laboratory test results, rock core photographs and other information obtained at these borings are available in the geotechnical memorandum prepared by HNTB for this structure.

Notes:

All bents are parallel.

For General Notes and Foundation Data, See Sheet No. 3.

For stationing and profile grade elevations along ℄ 61S & PG Line, see Sheet No. 4.

Detailed JUN 2025
Checked JUN 2025

Note: This drawing is not to scale. Follow dimensions.

GENERAL PLAN AND ELEVATION

STATE OF MISSOURI
DAVID MORANDEIRA
NUMBER PE-2021035906
PROFESSIONAL ENGINEER

THIS SHEET HAS BEEN SIGNED, SEALED AND DATED ELECTRONICALLY.

DATE PREPARED	
6/9/2025	
ROUTE	STATE
US-61	MO
DISTRICT	SHEET NO.
BR	A9682-2
COUNTY	
ST. CHARLES	
JOB NO.	
JST0020	
CONTRACT ID.	
PROJECT NO.	
BRIDGE NO.	
A9682	

DESCRIPTION

DATE

MISSOURI HIGHWAYS AND TRANSPORTATION COMMISSION
105 WEST CAPITOL
JEFFERSON CITY, MO 65102
1-888-ASK-MODOT (1-888-275-6636)

IMPROVE 70 ALLIANCE

HNTB
715 KIRK DRIVE
KANSAS CITY, MO 64105-1310
CERTIFICATE OF AUTHORITY
NO. 001270

Bartlett & West
601 MONROE ST., SUITE 201 - JEFFERSON CITY, MO 65101
(573) 634-2448 FAX (573) 634-8693
CERTIFICATE OF AUTHORITY NO. 000107 - ENGINEERING
WWW.BARTLETTWEST.COM

06/10/2025
Released for Construction

Foundation Data

Type	Design Data		Bent Number 1	2	3	4	5
Load Bearing Pile	Pile Type and Size		HP12x53	--	--	--	HP12x53
	Number	ea	9	--	--	--	10
	Approximate Length Per Each	ft	38	--	--	--	40
	Pile Point Reinforcement	ea	ALL	--	--	--	ALL
	Min. Galvanized Penetration (Elev.)	ft	Full Length	--	--	--	Full Length
	Pile Driving Verification Method		WEAP	--	--	--	WEAP
	Resistance Factor		0.5	--	--	--	0.5
	Minimum Nominal Axial Compressive Resistance	kip	400	--	--	--	404
Rock Socket	Number	ea	--	4	4	4	--
	Layer 1: Foundation Material		--	--	Shale	Shale	--
	Layer 1: Elevation Range	ft	--	--	598.4-590.7	593.0-581.1	--
	Layer 1: Minimum Nominal Axial Compressive Resistance (Side Resistance)	ksf	--	--	17.4	17.4	--
	Layer 2: Foundation Material		--	Limestone	Limestone	Limestone	--
	Layer 2: Elevation Range	ft	--	592.4-588.3	590.7-583.7	581.1-560	--
	Layer 2: Minimum Nominal Axial Compressive Resistance (Side Resistance)	ksf	--	31.4	31.4	31.4	--
	Layer 3: Foundation Material		--	Shale	--	--	--
	Layer 3: Elevation Range	ft	--	588.3-587.6	--	--	--
	Layer 3: Minimum Nominal Axial Compressive Resistance (Side Resistance)	ksf	--	17.4	*	--	--
	Layer 4: Foundation Material		--	Limestone	--	--	--
	Layer 4: Elevation Range	ft	--	587.6-565.0	--	--	--
	Layer 4: Minimum Nominal Axial Compressive Resistance (Side Resistance)	ksf	--	31.4	--	--	--
	Minimum Nominal Axial Compressive Resistance (Tip Resistance)	ksf	--	400	400	400	--

WEAP = Wave Equation Analysis of Piles

Load Bearing Piles:

$$\text{Minimum Nominal Axial Compressive Resistance} = \frac{\text{Maximum Factored Loads}}{\text{Resistance Factor}}$$

Rock Socket (Drilled Shafts):

$$\text{Minimum Nominal Axial Compressive Resistance (Side Resistance + Tip Resistance)} = \frac{\text{Maximum Factored Loads}}{\text{Resistance Factors}}$$

Driven Piles:

Prebore for piles at End Bents No. 1 and No. 5 to elevations 616.00 and 605.00, respectively.

All piles shall be galvanized full length.

Manufactured pile point reinforcement shall be used on all piles in this structure.

Pile point reinforcement need not be galvanized. Shop drawings will not be required for pile point reinforcement.

Prebore holes shall be backfilled with sand (or other approved material), in accordance with Sec 702, before piles are driven to bearing.

Roadway fill shall be completed to the final roadway section and up to the elevation of the bottom of the concrete beam within the limits of the structure and for not less than 25 feet in back of the fill face of the end bents before any piles are driven for any bents falling within the embankment section.

HP piles are anticipated to be driven to refusal on rock. Review all borings for depth of rock and restrict driving as appropriate to comply with hard rock driving criteria in accordance with Sec 702. When pile refusal on rock occurs, as approved by the engineer, the minimum nominal axial compressive resistance is verified and no additional pile driving verification method is required.

General Notes:

Design Specifications:

2020 AASHTO LRFD Bridge Design Specifications (9th Ed.)
Seismic Design Category = A (Seismic Details plus Abutment Seismic Design)

Design Loading:

Vehicular = HL-93
Future Wearing Surface = 35 lb/sf
Earth = 120 lb/cf
Equivalent Fluid Pressure = 45 lb/cf
Superstructure: Simply-Supported, Non-Composite for Dead Load. Continuous Composite for live loads.

General Notes:

Design Unit Stresses:

Class B Concrete (Substructure)	f'c = 3,000 psi
Class B-2 Concrete (Drilled Shafts & Rock Sockets)	f'c = 4,000 psi
Class B-1 Concrete (Barrier)	f'c = 4,000 psi
Class B-2 Concrete (Superstructure, except Prestressed Girders and Barrier)	f'c = 4,000 psi
Reinforcing Steel (ASTM A706 Grade 60)	fy = 60,000 psi
Structural Steel HP Pile (ASTM A709 Grade 50)	fy = 50,000 psi
Structural Steel Girder Chairs (ASTM A709 Grade 36)	fy= 36,000 psi

For prestressed girder stresses, see Sheets No. 22 thru 25

Neoprene Pads:

Neoprene bearing pads shall be 60 durometer and shall be in accordance with Sec 716.

Pile Protective Coatings:

Piles shall be galvanized in accordance with Sec 702 and Sec. 1081.

Joint Filler:

All joint filler shall be in accordance with Sec 1057 for preformed sponge rubber expansion and partition joint filler, except as noted.

Reinforcing Steel:

Minimum clearance to reinforcing steel shall be 1 1/2", unless otherwise shown.

All exposed substructure elements will contain epoxy coated reinforcing.

Traffic Handling:

Vertical Clearance for I-70 & Ramp 70W-Z traffic during construction shall be 15 ft. minimum over all lanes of live traffic as shown in each phase of the Maintenance of Traffic Plans.

Structure to be closed during construction. Traffic to be maintained on other structures during construction. See Maintenance of Traffic Plans for traffic control.

Structural Steel Coating:

Structural steel for the girder chairs shall be coated with not less than 2 mils of organic zinc primer. Scratched or damaged surfaces are to be touched up in the field before concrete is poured. In lieu of coating, the girder chairs may be galvanized in accordance with ASTM A123.

Concrete Protective Coatings:

Protective coating for concrete bents and piers (Epoxy) shall be applied to all exposed substructure surfaces and in accordance with Sec 711.

Miscellaneous:

High strength bolts, nuts and washers will be sampled for quality assurance as specified in Sec 106.

Stay-In-Place Forms:

Corrugated steel forms, supports, closure elements and accessories shall be in accordance with grade requirements and coating designation G165 of ASTM A653. Complete Shop drawings of the permanent steel deck forms shall be required in accordance with Sec 1080.

Corrugations of stay-in-place forms shall be filled with an expanded polystyrene material. The polystyrene material shall be placed in the forms with an adhesive in accordance with the manufacturer's recommendations.

Form sheets shall not rest directly on the top of girder flanges. Sheets shall be securely fastened to form supports with a minimum bearing length of one inch on each end. Form supports shall be placed in direct contact with the flange. Drilling holes in the girder flanges will not be permitted. All steel fabrication and construction shall be in accordance with Sec 1080 and 712. Certified field welders will not be required for welding of the form supports.

The design of stay-in-place corrugated steel forms is per manufacturer which shall be in accordance with Sec 703 for falsework and forms. Maximum actual weight of corrugated steel forms allowed shall be 4 psf assumed for girder loading.

Standard Plans:

609.00R
617.10N
706.35H

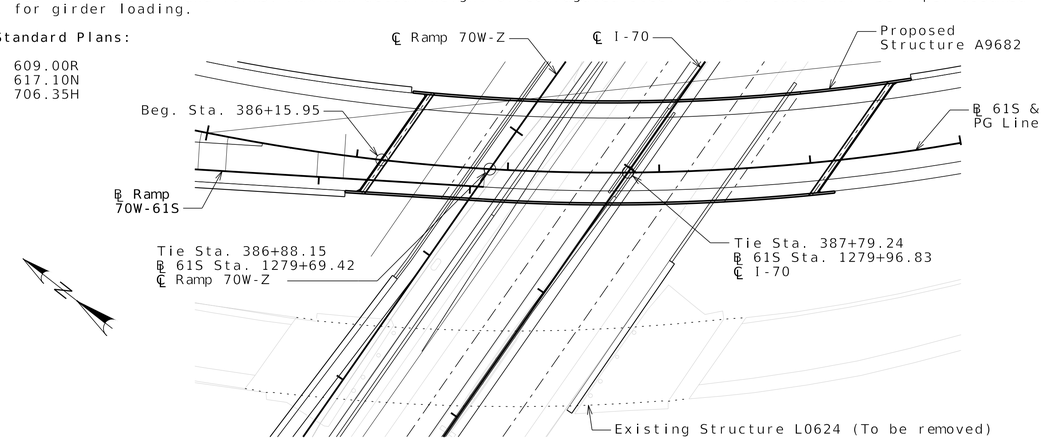

LOCATION SKETCH

GENERAL NOTES

Detailed JUN 2025
Checked JUN 2025

Note: This drawing is not to scale. Follow dimensions.

STATE OF MISSOURI
DAVID MORANDEIRA
NUMBER
PE-2021035906
PROFESSIONAL ENGINEER

THIS SHEET HAS BEEN SIGNED, SEALED AND DATED ELECTRONICALLY.

DATE PREPARED 6/9/2025
ROUTE US-61 | STATE MO
DISTRICT BR | SHEET NO. A9682-3
COUNTY ST. CHARLES
JOB NO. JST0020
CONTRACT ID.
PROJECT NO.
BRIDGE NO. A9682

DESCRIPTION | DATE

MISSOURI HIGHWAYS AND TRANSPORTATION COMMISSION
105 WEST CAPITOL
JEFFERSON CITY, MO 65102
1-888-ASK-MODOT (1-888-275-6636)

IMPROVE 70 ALLIANCE

HNTB
715 KIRK DRIVE
KANSAS CITY, MO 64105-1310
CERTIFICATE OF AUTHORITY NO. 001270

Bartlett & West
401 MONROE ST., SUITE 201 - JEFFERSON CITY, MO 65101
PHONE: 573-893-4336
CERTIFICATE OF AUTHORITY NO. 000167 - ENGINEERING
WWW.BARTLETTWEST.COM

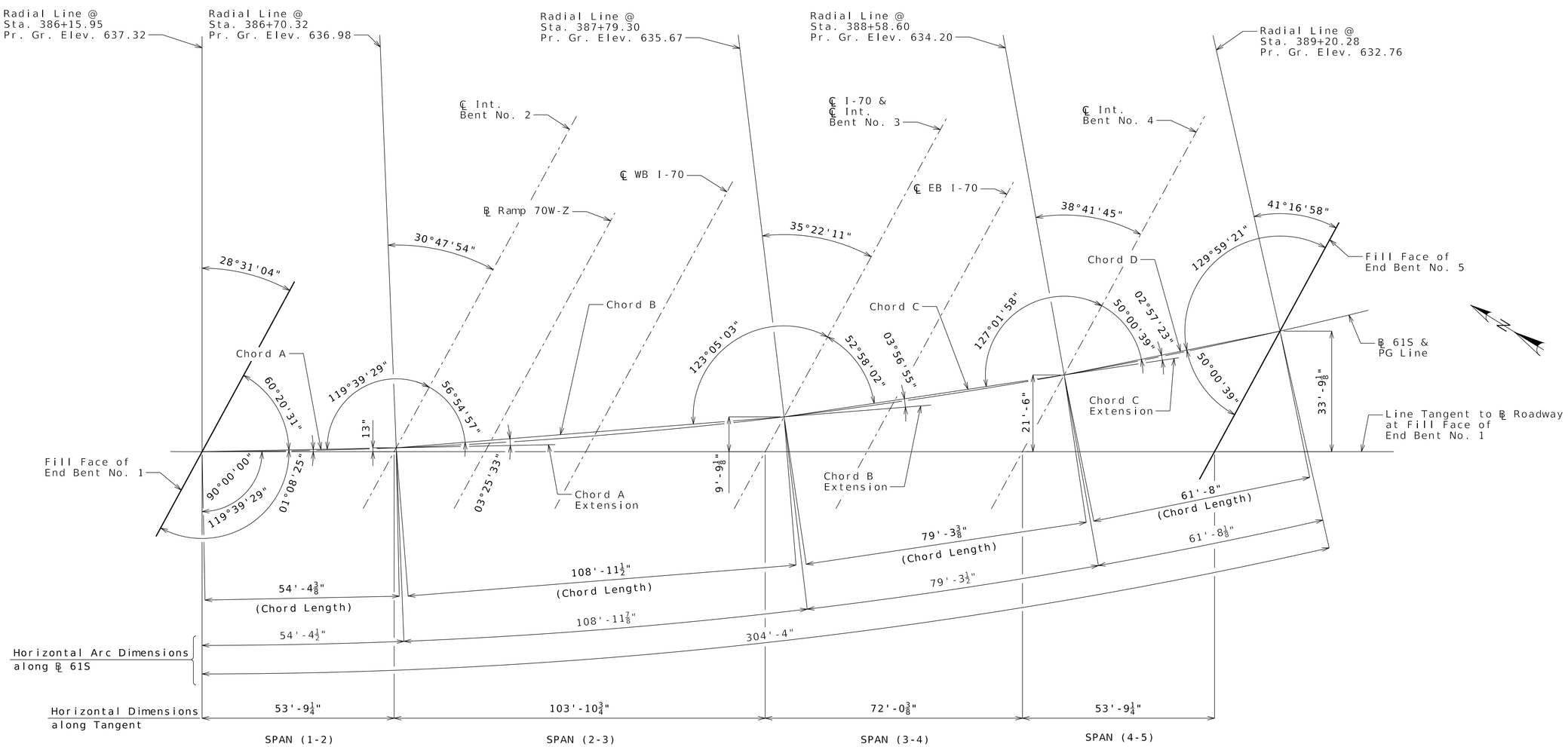

PLAN SHOWING LAYOUT DATA FOR SUBSTRUCTURE

Notes:
All bents are parallel.
All dimensions are horizontal.

SUBSTRUCTURE LAYOUT

Detailed JUN 2025
Checked JUN 2025

Note: This drawing is not to scale. Follow dimensions.

06/10/2025
Released for Construction

STATE OF MISSOURI
DAVID MORANDEIRA
NUMBER PE-2021035906
PROFESSIONAL ENGINEER

THIS SHEET HAS BEEN SIGNED, SEALED AND DATED ELECTRONICALLY.

DATE PREPARED	
6/9/2025	
ROUTE	STATE
US-61	MO
DISTRICT	SHEET NO.
BR	A9682-4
COUNTY	
ST. CHARLES	
JOB NO.	
JST0020	
CONTRACT ID.	
PROJECT NO.	
BRIDGE NO.	
A9682	

DESCRIPTION

DATE

MISSOURI HIGHWAYS AND TRANSPORTATION COMMISSION
105 WEST CAPITOL
JEFFERSON CITY, MO 65102
1-888-ASK-MODOT (1-888-275-6636)

IMPROVE 70 ALLIANCE

HNTB
715 KIRK DRIVE
KANSAS CITY, MO 64105-1310
CERTIFICATE OF AUTHORITY
NO. 001270

Bartlett & West
601 MONROE ST., SUITE 201 - JEFFERSON CITY, MO 65101
PHONE: 573-893-4336
CERTIFICATE OF AUTHORITY NO. 000197 - ENGINEERING
WWW.BARTLETTWEST.COM

B_A9682_003A_JST0020_SUBLAY.dgn 9:25:22 AM 6/9/2025

06/10/2025
Released for Construction

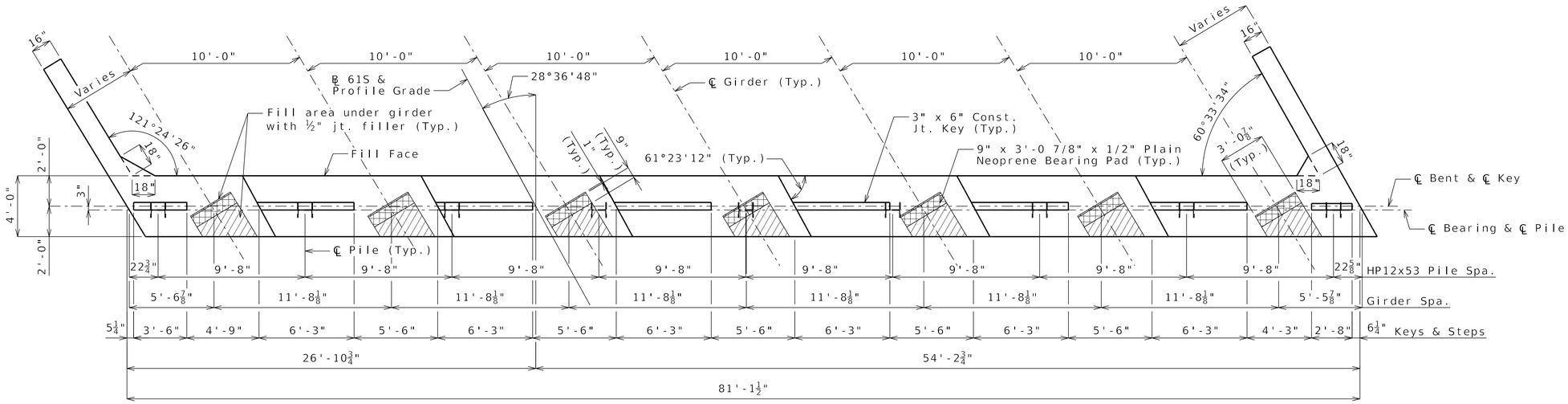

PLAN OF BEAM

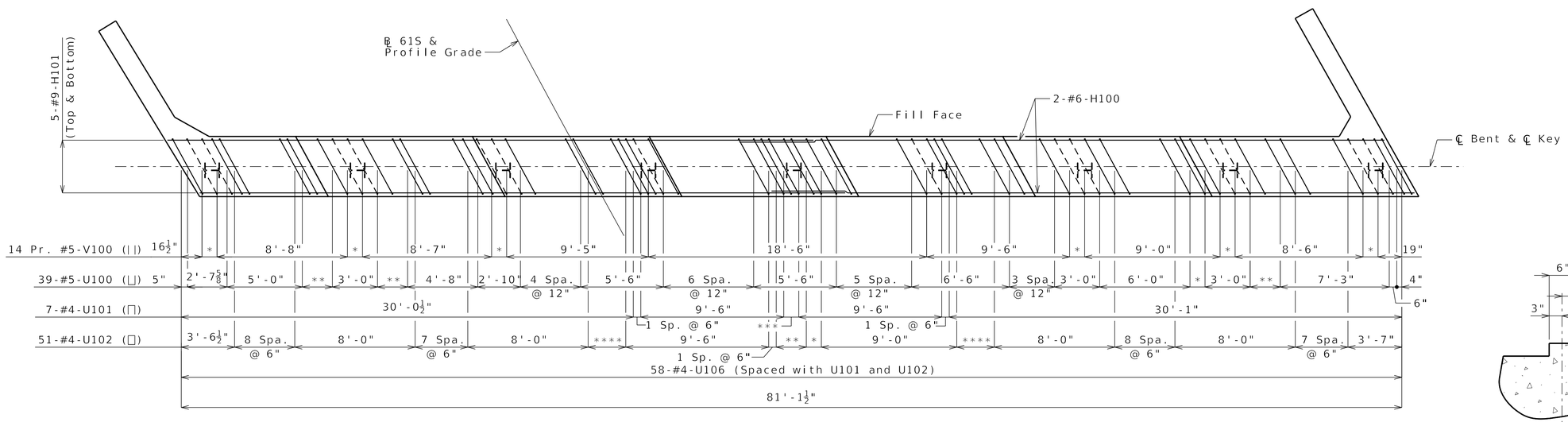

PLAN OF BEAM SHOWING REINFORCEMENT

Keys not shown for clarity.

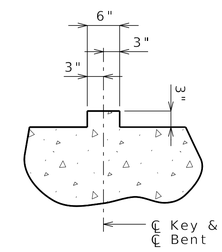

SECTION THRU KEY

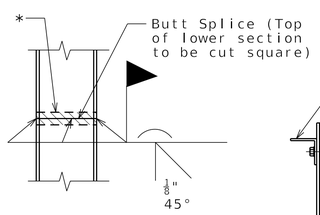

STEEL PILE SPLICE

(If required)

* Galvanizing material shall be omitted or removed one inch clear of weld locations in accordance with Sec 702.

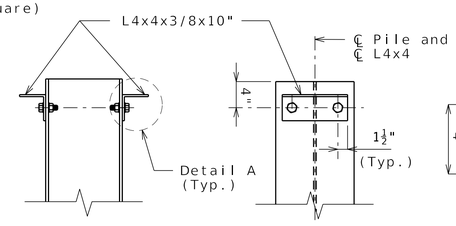

DETAILS OF HP PILE ANCHORS

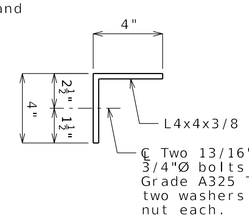

DETAIL A

* 1 Space @ 12"
** 2 Spaces @ 12"
*** 2 Spaces @ 6"
**** 5 Spaces @ 6"

Angles shall be coated with a minimum of two coats of non-aluminum epoxy mastic primer to provide a dry film thickness of 4 mils minimum, 8 mils maximum, or galvanized in accordance with Sec 1081. Bolts, washers and nuts shall be galvanized in accordance with AASHTO M 232 (ASTM A153), Class C.

General Notes:

Work this sheet with Sheets No. 6 and 7.

All U bars and pairs of V bars shall be placed parallel to skewed steps.

Reinforcing steel shall be shifted to clear piles. U bars shall clear piles by at least 1 1/2 inches.

DETAILS OF END BENT NO. 1

Detailed JUN 2025
Checked JUN 2025

Note: This drawing is not to scale. Follow dimensions.

STATE OF MISSOURI
DAVID MORANDEIRA
NUMBER
PE-2021035906
PROFESSIONAL ENGINEER

THIS SHEET HAS BEEN SIGNED, SEALED AND DATED ELECTRONICALLY.

DATE PREPARED	
6/9/2025	
ROUTE	STATE
US-61	MO
DISTRICT	SHEET NO.
BR	A9682-5
COUNTY	
ST. CHARLES	
JOB NO.	
JST0020	
CONTRACT ID.	
PROJECT NO.	
BRIDGE NO.	
A9682	

DATE	DESCRIPTION

MISSOURI HIGHWAYS AND TRANSPORTATION COMMISSION
105 WEST CAPITOL
JEFFERSON CITY, MO 65102
1-888-ASK-MODOT (1-888-275-6636)

IMPROVE 70 ALLIANCE

HNTB
715 KIRK DRIVE
KANSAS CITY, MO 64105-1310
CERTIFICATE OF AUTHORITY NO. 001270

Bartlett & West
601 MONROE ST., SUITE 201 - JEFFERSON CITY, MO 65101
(573) 635-2994 FAX (573) 635-2995
CERTIFICATE OF AUTHORITY NO. 000107 - ENGINEERING
WWW.BARTLETTWEST.COM

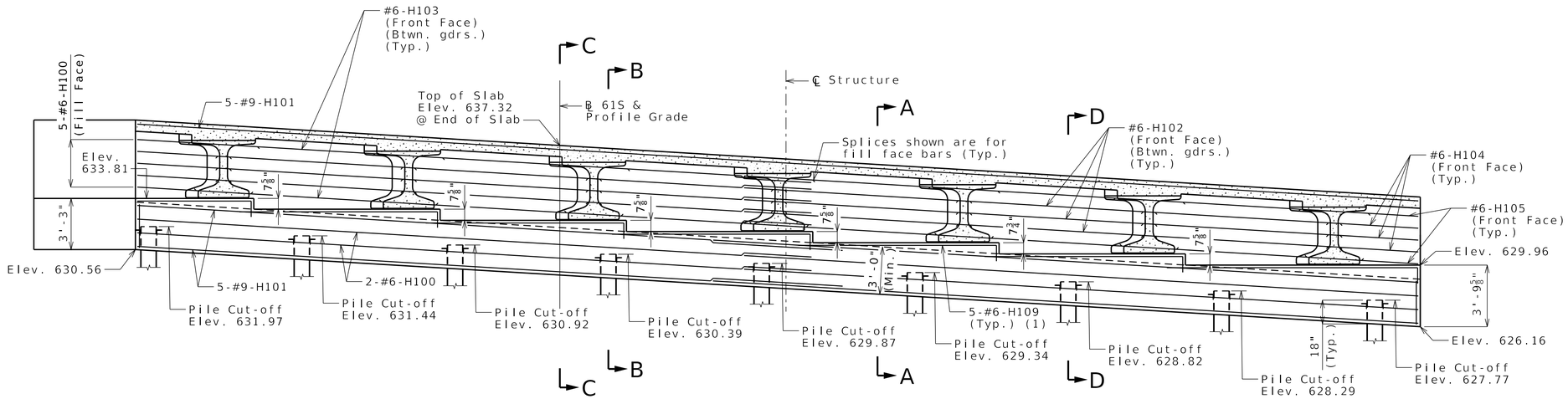

(1) Cut H109 bars as needed to fit step length

SECTION NEAR END BENT

Notes:
Lap Splices for #6 - H100 bars = 4'-0" (Min.).
Lap Splices for #9 - H101 bars = 8'-6" (Min.).

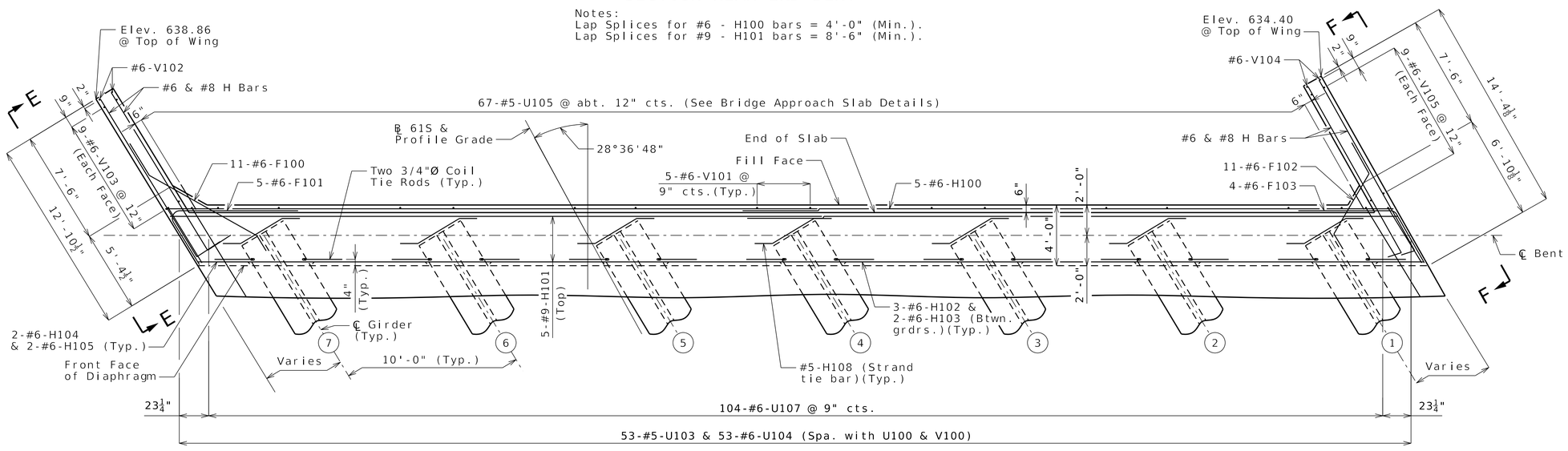

PART PLAN

General Notes:

Work this sheet with Sheets No. 5 and 7.

For Sections A-A, B-B, C-C & D-D and Elevations E-E & F-F, see Sheet No. 7.

The #6-F100 and #6-F102 bars shall be bent in the field to clear girders.

The U bars shall be placed parallel to skewed steps.

All concrete in the end bent above top of beam and below top of slab shall be Class B-2.

Strands at end of girders shall be field bent or, if necessary, cut on field to maintain 1 1/2-inch minimum clearance to fill face of end bent.

For location of coil tie rods and #5-H108 (strand tie bar), see Sheet No. 22.

For details of vertical drain at end bents, see Sheet No. 8.

For details of bridge approach slab, see Sheet No. 34.

DETAILS OF END BENT NO. 1

STATE OF MISSOURI
DAVID MORANDEIRA NUMBER PE-2021035906
PROFESSIONAL ENGINEER

THIS SHEET HAS BEEN SIGNED, SEALED AND DATED ELECTRONICALLY.

DATE PREPARED	
6/9/2025	
ROUTE	STATE
US-61	MO
DISTRICT	SHEET NO.
BR	A9682-6
COUNTY	
ST. CHARLES	
JOB NO.	
JST0020	
CONTRACT ID.	
PROJECT NO.	
BRIDGE NO.	
A9682	

DATE	DESCRIPTION

MISSOURI HIGHWAYS AND TRANSPORTATION COMMISSION
105 WEST CAPITOL
JEFFERSON CITY, MO 65102
1-888-ASK-MODOT (1-888-275-6636)

HNTB
715 KIRK DRIVE
KANSAS CITY, MO 64105-1310
CERTIFICATE OF AUTHORITY NO. 001270

Bartlett & West
601 MONROE ST., SUITE 201 - JEFFERSON CITY, MO 65101
PHONE: 573-635-2627 FAX: 573-635-2631
CERTIFICATE OF AUTHORITY NO. 000187 - ENGINEERING
WWW.BARTLETTWEST.COM

06/10/2025
Released for Construction

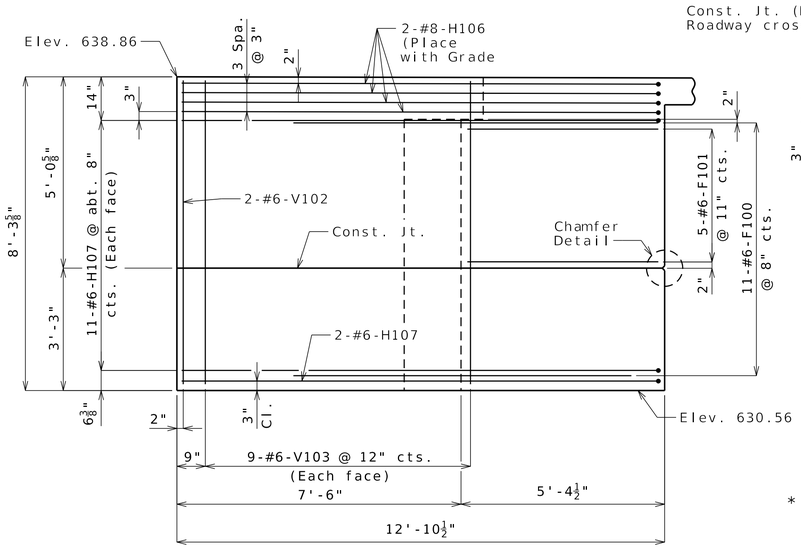

ELEVATION E-E

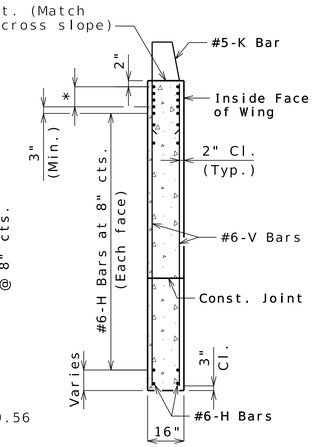

TYPICAL SECTION THRU WING

* #8-H Bars at 3" cts. (Each face)(Place with grade)

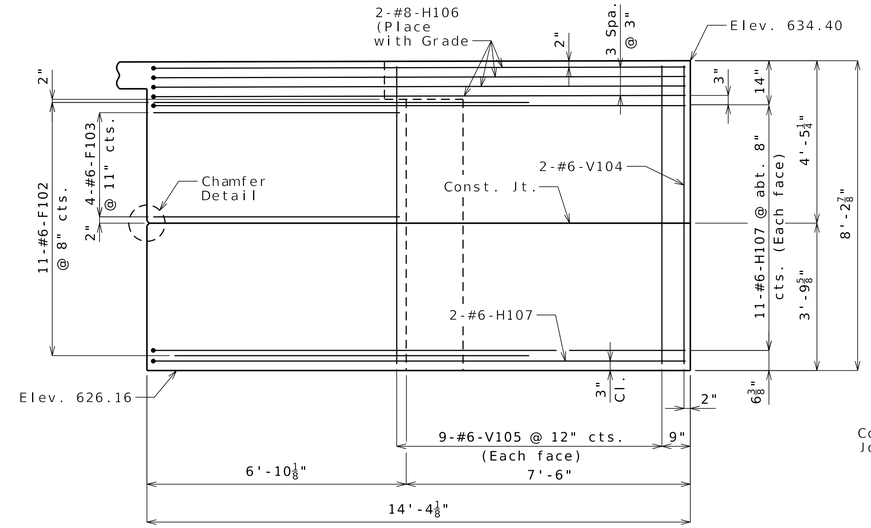

ELEVATION F-F

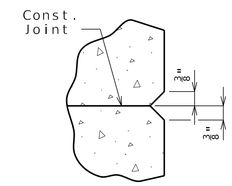

CHAMFER DETAIL

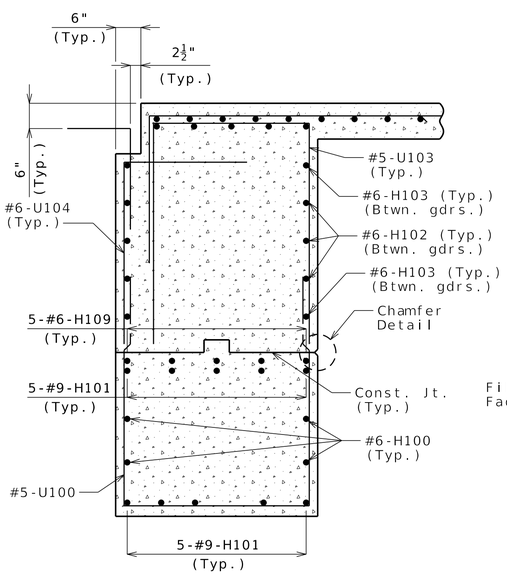

SECTION A-A

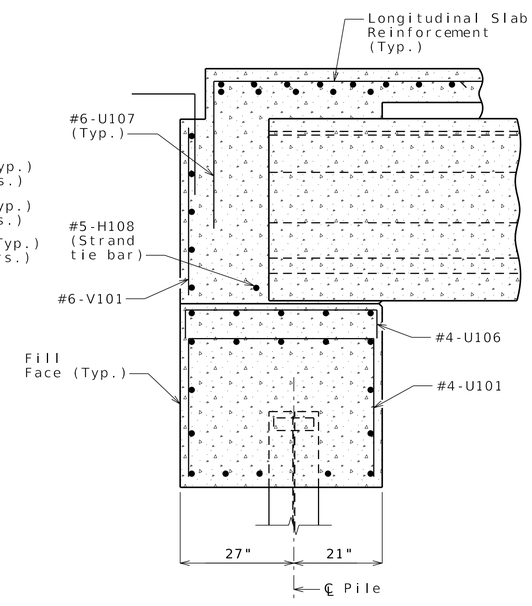

SECTION B-B

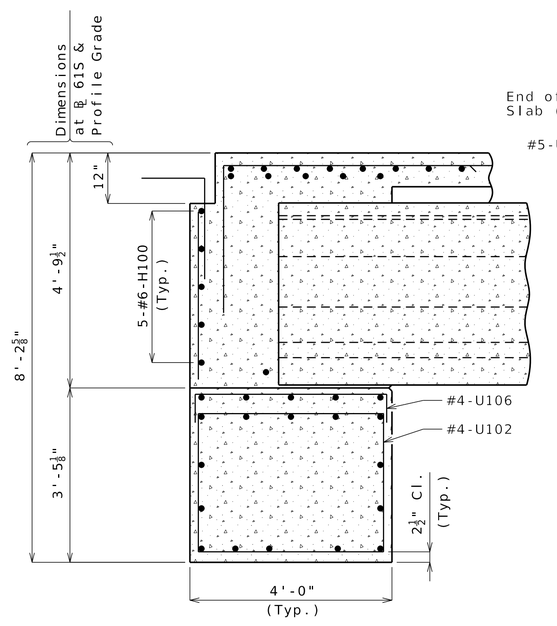

SECTION C-C

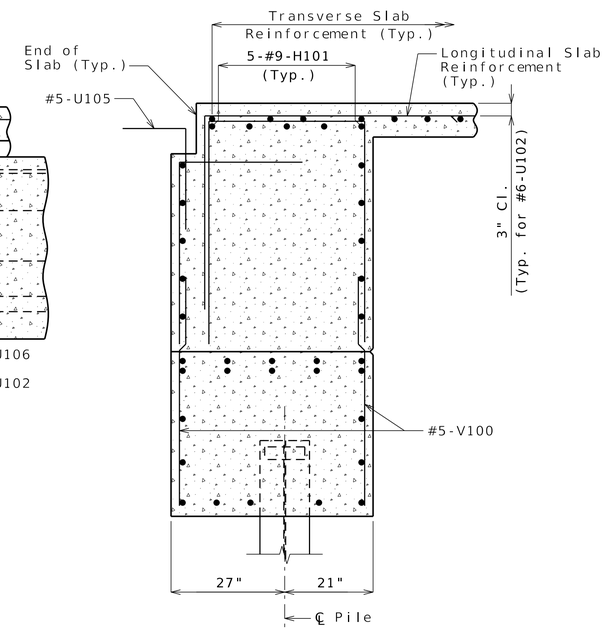

SECTION D-D

General Notes:

Work this sheet with Sheets No. 5 and 6.

For reinforcement of the barrier, see Sheet No. 33.

DETAILS OF END BENT NO. 1

STATE OF MISSOURI
DAVID MORANDEIRA
NUMBER PE-2021035906
PROFESSIONAL ENGINEER

THIS SHEET HAS BEEN SIGNED, SEALED AND DATED ELECTRONICALLY.

DATE PREPARED	
6/9/2025	
ROUTE	STATE
US-61	MO
DISTRICT	SHEET NO.
BR	A9682-7
COUNTY	
ST. CHARLES	
JOB NO.	
JST0020	
CONTRACT ID.	
PROJECT NO.	
BRIDGE NO.	
A9682	

DATE	DESCRIPTION

MISSOURI HIGHWAYS AND TRANSPORTATION COMMISSION
105 WEST CAPITOL
JEFFERSON CITY, MO 65102
1-888-ASK-MODOT (1-888-275-6636)

HNTB
715 KIRK DRIVE
KANSAS CITY, MO 64105-1310
CERTIFICATE OF AUTHORITY NO. 001270

Bartlett & West
601 MONROE ST., SUITE 201 - JEFFERSON CITY, MO 65101
PHONE: 573-893-1911 FAX: 573-893-1977
CERTIFICATE OF AUTHORITY NO. 000107 - ENGINEERING
WWW.BARTLETTWEST.COM

Detailed JUN 2025
Checked JUN 2025

Note: This drawing is not to scale. Follow dimensions.

B_A9682_006_JST0020_BENT1-3.dgn 9:25:31 AM 6/9/2025

06/10/2025
Released for Construction

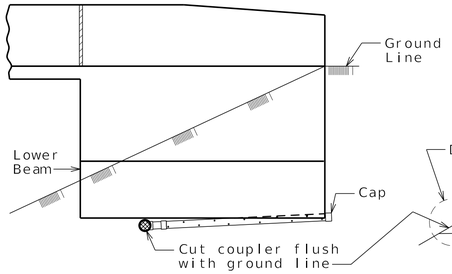

ELEVATION OF WING

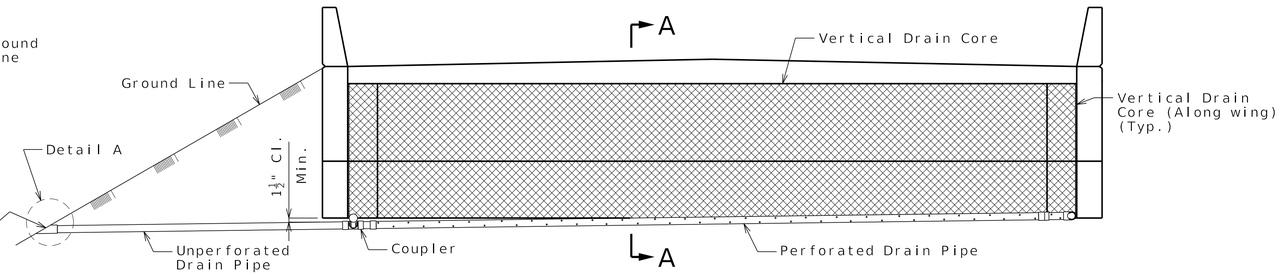

ELEVATION OF END BENT

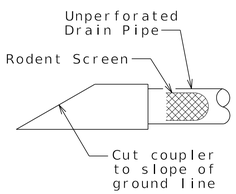

DETAIL A

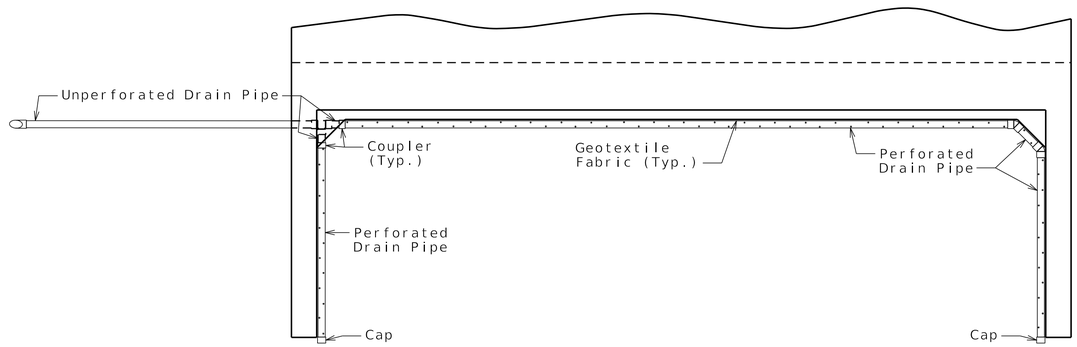

PLAN OF END BENT

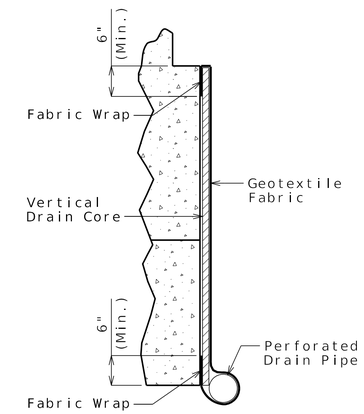

PART SECTION A-A
(Section thru wing similar)

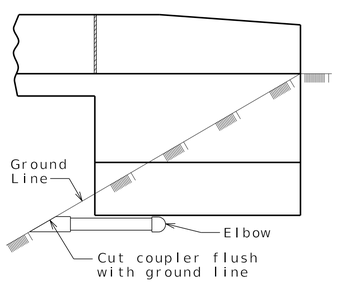

ELEVATION OF WING

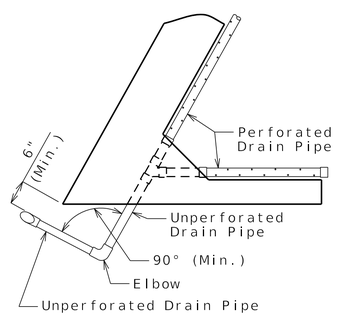

PART PLAN

OPTIONAL TURNED DRAIN
(Use only when straight drain is not practical.)

General Notes:

All drain pipe shall be sloped 1 to 2 percent.

Drain pipe may be either 6-inch diameter corrugated metallic-coated steel pipe underdrain, 4-inch diameter corrugated polyvinyl chloride (PVC) drain pipe, or 4-inch diameter corrugated polyethylene (PE) drain pipe.

Drain pipe shall be placed at fill face of end bent and inside face of wings. The pipe shall slope to lowest grade of ground line, also missing the lower beam of end bent by a minimum of 1 1/2 inches.

Perforated pipe shall be placed at fill face side and inside face of wings at the bottom of end bent and plain pipe shall be used where the vertical drain ends to the exit at ground line.

(Squared end bent shown, skewed end bent similar)

Note: This drawing is not to scale. Follow dimensions.

VERTICAL DRAIN AT END BENTS

Detailed JUN 2025
Checked JUN 2025

STATE OF MISSOURI
DAVID MORANDEIRA
NUMBER PE-2021035906
PROFESSIONAL ENGINEER

THIS SHEET HAS BEEN SIGNED, SEALED AND DATED ELECTRONICALLY.

DATE PREPARED	
6/9/2025	
ROUTE	STATE
US-61	MO
DISTRICT	SHEET NO.
BR	A9682-8
COUNTY	
ST. CHARLES	
JOB NO.	
JST0020	
CONTRACT ID.	
PROJECT NO.	
BRIDGE NO.	
A9682	

DATE	DESCRIPTION

MISSOURI HIGHWAYS AND TRANSPORTATION COMMISSION
105 WEST CAPITOL
JEFFERSON CITY, MO 65102
1-888-ASK-MODOT (1-888-275-6636)

IMPROVE 70 ALLIANCE

HNTB
715 KIRK DRIVE
KANSAS CITY, MO 64105-1310
CERTIFICATE OF AUTHORITY NO. 001270

Bartlett & West
601 MONROE ST., SUITE 201 - JEFFERSON CITY, MO 65101
PHONE: 573-893-4336
CERTIFICATE OF AUTHORITY NO. 000107 - ENGINEERING
WWW.BARTLETTWEST.COM

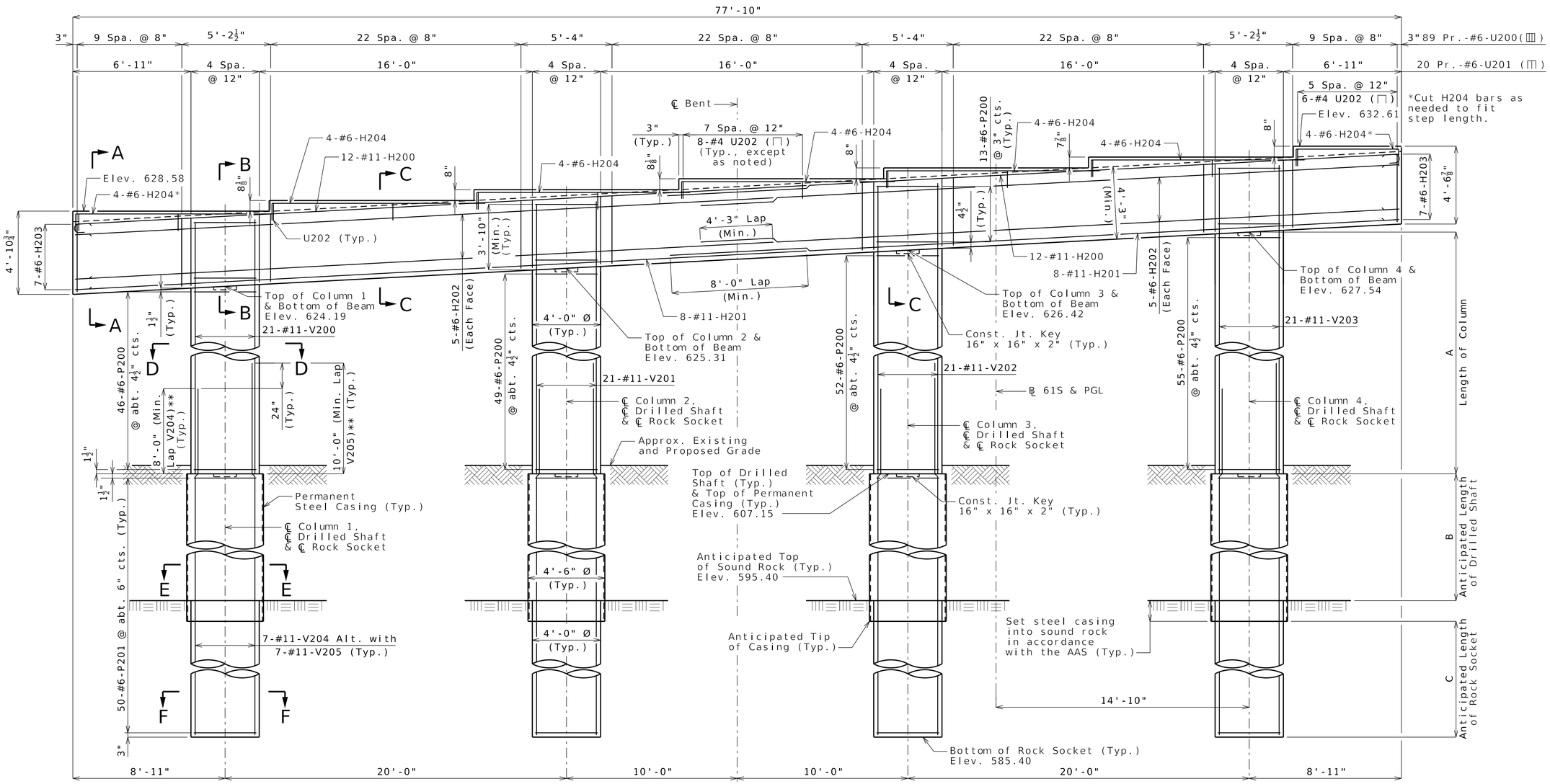

** Stagger alternating V204 and V205 splice by 24". For odd number of bars, two bars in each column may splice at the same location. Cut bars as needed.

ELEVATION

Beam keys not shown for clarity.

Dimension Variable Table			
Column	A	B	C
1	17'-0½"	11'-9"	10'-0"
2	18'-1⅞"	11'-9"	10'-0"
3	19'-3¼"	11'-9"	10'-0"
4	20'-4¾"	11'-9"	10'-0"

General Notes:

Drilled shafts shall be constructed and inspected in accordance with the Bridge Geotechnical Memo and the project Drilled Shaft Construction AAS.

Work this sheet with Sheets No. 10 and 11.

Thickness of permanent steel casing shall be in accordance with Drilled Shaft Construction AAS.

An additional 4 feet has been added to V-bar and additional 32-#6-P201 bars have been added for possible change in drilled shaft or rock socket length. The additional V-bar length shall be cut off or included in the reinforcement lap if not required. The P bars shall be spaced similarly to that shown in Elevation, if required, or a lesser spacing if not required but not less than 6-inch centers.

Sonic logging testing shall be peformed on all drilled shafts and rock sockets.

The tip of casing shall not extend into the rock socket elevation range reported in the Foundation Data table without approval by the engineer.

DETAILS OF INTERMEDIATE BENT NO. 2

Detailed JUN 2025
Checked JUN 2025

Note: This drawing is not to scale. Follow dimensions.

B_A9682_008_JST0020_BENT2-1.dgn 9:25:36 AM 6/9/2025

STATE OF MISSOURI
DAVID MORANDEIRA
NUMBER PE-2021035906
PROFESSIONAL ENGINEER

THIS SHEET HAS BEEN SIGNED, SEALED AND DATED ELECTRONICALLY.

DATE PREPARED	
6/9/2025	
ROUTE	STATE
US-61	MO
DISTRICT	SHEET NO.
BR	A9682-9
COUNTY	
ST. CHARLES	
JOB NO.	
JST0020	
CONTRACT ID.	
PROJECT NO.	
BRIDGE NO.	
A9682	

DATE	DESCRIPTION

MISSOURI HIGHWAYS AND TRANSPORTATION COMMISSION
105 WEST CAPITOL
JEFFERSON CITY, MO 65102
1-888-ASK-MODOT (1-888-275-6636)

HNTB
715 KIRK DRIVE
KANSAS CITY, MO 64105-1310
CERTIFICATE OF AUTHORITY NO. 001270

Bartlett & West
601 MONROE ST., SUITE 201 - JEFFERSON CITY, MO 65101
WWW.BARTLETTWEST.COM
CERTIFICATE OF AUTHORITY NO. 000107 - ENGINEERING

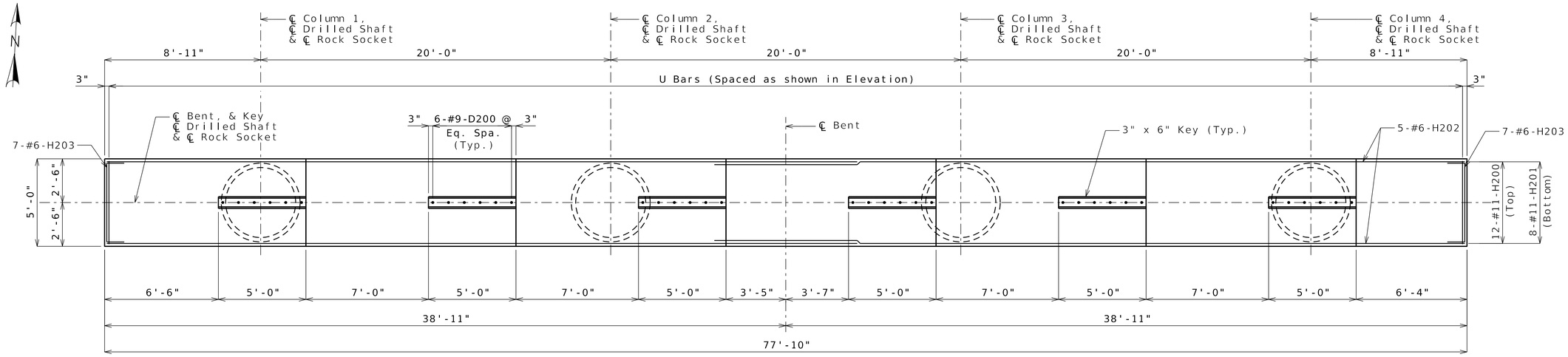

PLAN SHOWING REINFORCEMENT

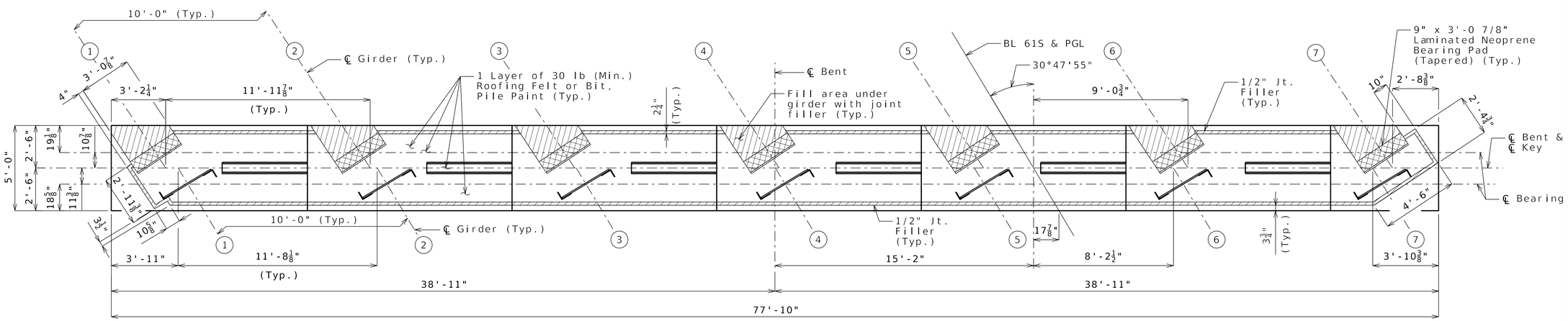

PLAN OF BEAM

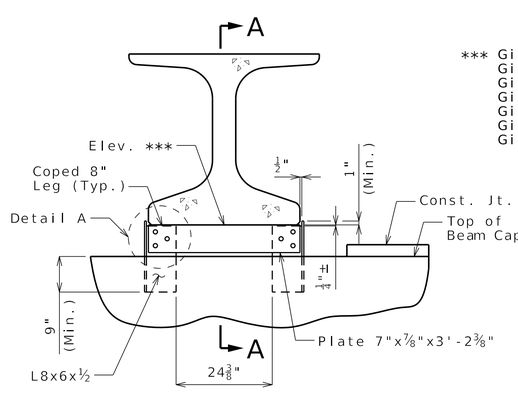

ELEVATION

*** Girder 1: 629.55
Girder 2: 630.21
Girder 3: 630.86
Girder 4: 631.51
Girder 5: 632.17
Girder 6: 632.82
Girder 7: 633.47

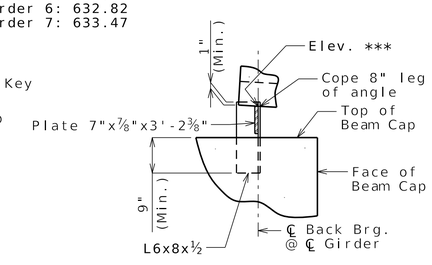

SECTION A-A

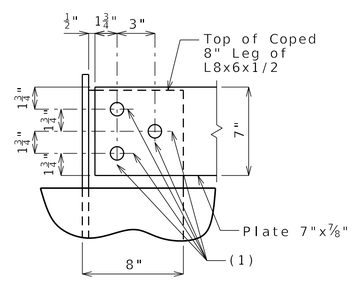

(1) ℄ 1 1/16" ⌀ Hole in angle (Field drilled) & plate for 1" ⌀ ASTM F3125 Grade A325 Type 1 bolts

DETAIL A

GIRDER CHAIR DETAILS

General Notes:

Work this sheet with Sheets No. 9 and 11.

For steps 2 inches or more, use 2 1/4x 1/2-inch joint filler up vertical face.

Structural steel for the girder beam chairs shall be coated with not less than 2 mils of inorganic zinc primer. Scratched or damaged surfaces are to be touched up in the field before concrete is poured. In lieu of coating, the girder beam chairs may be galvanized in accordance with ASTM A123.

Steel for chairs shall be ASTM A709 Grade 36.

Reinforcing steel shall be shifted to clear chairs.

DETAILS OF INTERMEDIATE BENT NO. 2

Detailed JUN 2025
Checked JUN 2025

Note: This drawing is not to scale. Follow dimensions.

STATE OF MISSOURI
DAVID MORANDEIRA
NUMBER PE-2021035906
PROFESSIONAL ENGINEER

THIS SHEET HAS BEEN SIGNED, SEALED AND DATED ELECTRONICALLY.

DATE PREPARED	6/9/2025
ROUTE	US-61
STATE	MO
DISTRICT	BR
SHEET NO.	A9682-10
COUNTY	ST. CHARLES
JOB NO.	JST0020
CONTRACT ID.	
PROJECT NO.	
BRIDGE NO.	A9682

DESCRIPTION

DATE

MISSOURI HIGHWAYS AND TRANSPORTATION COMMISSION
105 WEST CAPITOL
JEFFERSON CITY, MO 65102
1-888-ASK-MODOT (1-888-275-6636)

IMPROVE 70 ALLIANCE

HNTB
715 KIRK DRIVE
KANSAS CITY, MO 64105-1310
CERTIFICATE OF AUTHORITY NO. 001270

Bartlett & West
601 MONROE ST. SUITE 201, JEFFERSON CITY, MO 65101
(573) 634-2448 FAX (573) 634-8291
CERTIFICATE OF AUTHORITY NO. 000107 - ENGINEERING
BWGARCHITECTS.COM

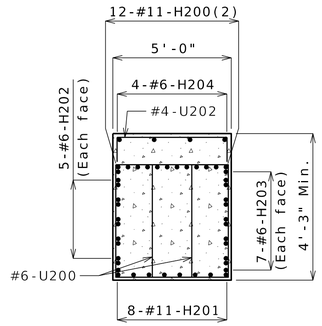

SECTION A-A

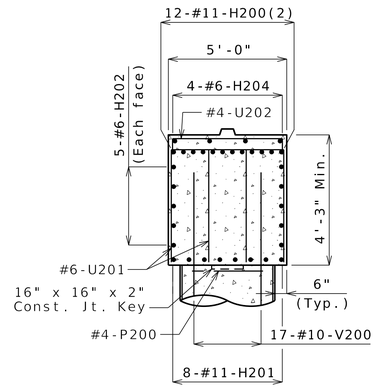

SECTION B-B

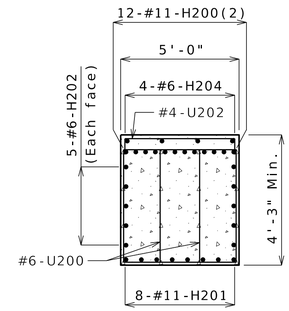

SECTION C-C

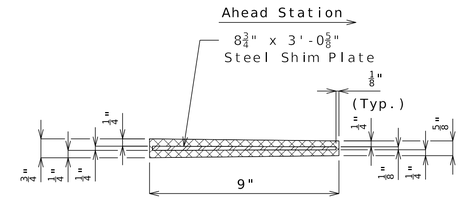

SECTION THRU LAMINATED NEOPRENE BEARING PAD (TAPERED) (BACK BRG.)
(7 Required)

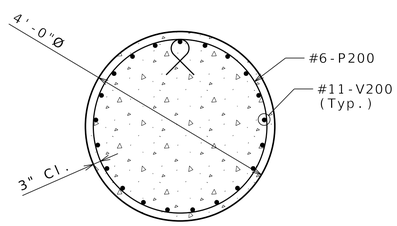

SECTION D-D

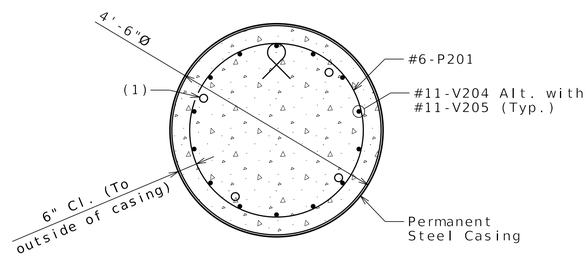

SECTION E-E

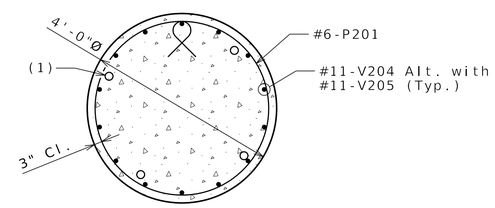

SECTION F-F

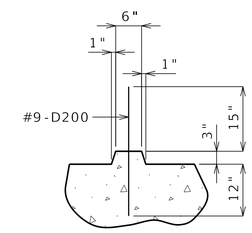

SECTION THRU KEY

(1) 2"Ø Steel Pipe for sonic logging testing (4 each shaft)

(2) Adjust bars as necessary to clear girder chair's embedded L-shape. Maintain 2 1/2" clear spacing between bars. Bundle bars horizontally if necessary.

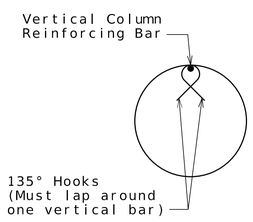

SEISMIC STIRRUP BAR
(#6-P200 & P201)

Note: Seismic stirrups hooks shall be staggered around the column at about one-third of the hoop circumference.

General Notes:

Work this sheet with Sheets No. 9 and 10.

Detailed JUN 2025
Checked JUN 2025

Note: This drawing is not to scale. Follow dimensions.

DETAILS OF INTERMEDIATE BENT NO. 2

DATE PREPARED 6/9/2025

ROUTE	STATE
US-61	MO
DISTRICT	SHEET NO.
BR	A9682-11

COUNTY: ST. CHARLES
JOB NO.: JST0020
CONTRACT ID.:
PROJECT NO.:
BRIDGE NO.: A9682

DATE	DESCRIPTION

MISSOURI HIGHWAYS AND TRANSPORTATION COMMISSION
105 WEST CAPITOL
JEFFERSON CITY, MO 65102
1-888-ASK-MODOT (1-888-275-6636)
HNTB 715 KIRK DRIVE KANSAS CITY, MO 64105-1310 CERTIFICATE OF AUTHORITY NO. 001270
Bartlett & West 601 MONROE ST. SUITE 201 - JEFFERSON CITY, MO 65101 (573) 635-2994 FAX (573) 635-2995 CERTIFICATE OF AUTHORITY NO. 000107 - ENGINEERING WWW.BARTLETTWEST.COM

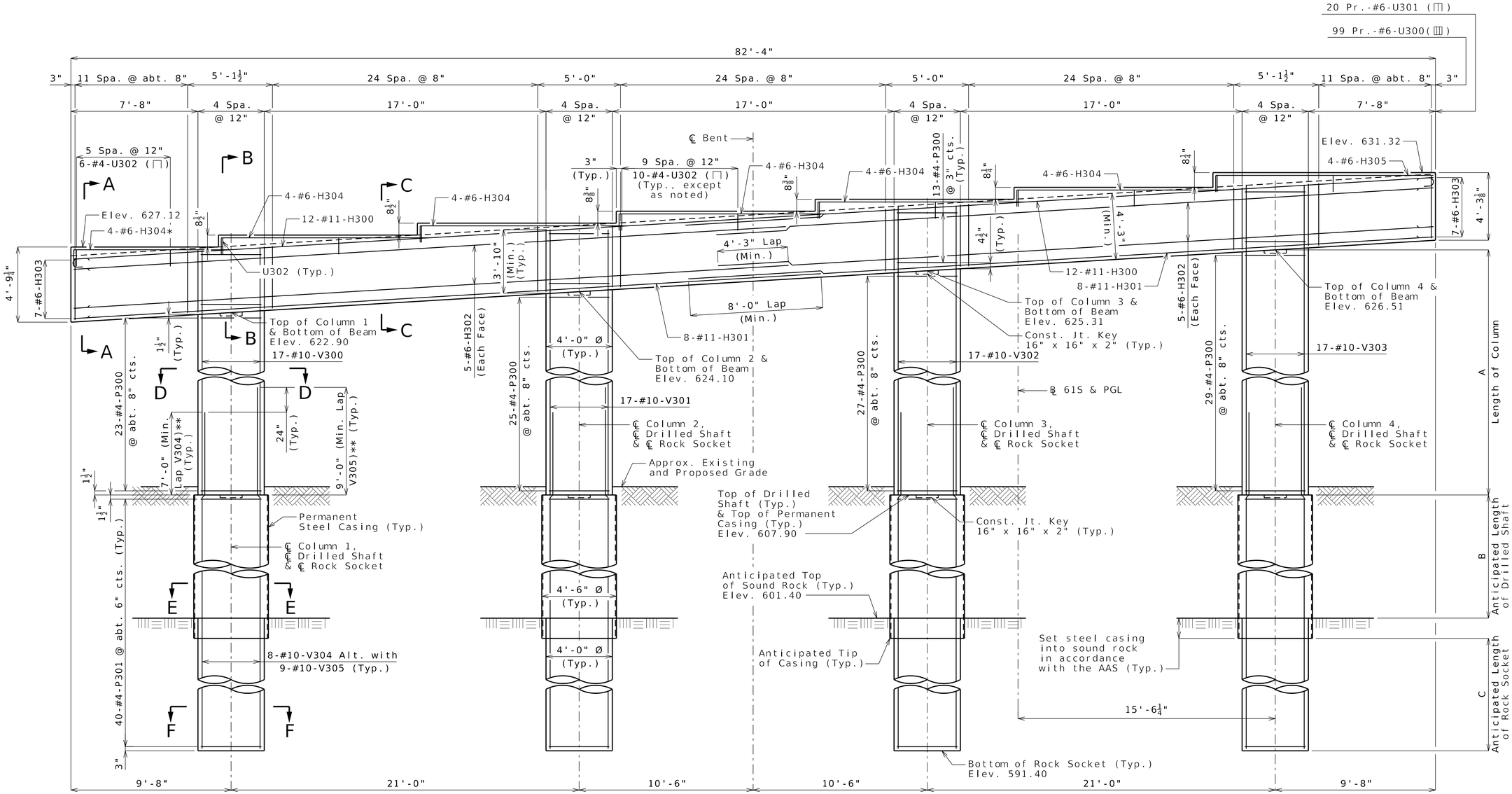

ELEVATION

Beam keys not shown for clarity.

* Cut H304 bars as needed to fit step length.
** Stagger alternating V304 and V305 splice by 24". For odd number of bars, two bars in each column may splice at the same location. Cut bars as needed.

Dimension Variable Table			
Column	A	B	C
1	15'-0"	6'-6"	10'-0"
2	16'-2½"	6'-6"	10'-0"
3	17'-4⅞"	6'-6"	10'-0"
4	18'-7¼"	6'-6"	10'-0"

General Notes:

Drilled shafts shall be constructed and inspected in accordance with the Bridge Geotechnical Memo and the project Drilled Shaft Construction AAS.

Work this sheet with Sheets No. 13 and 14.

Thickness of permanent steel casing shall be in accordance with Drilled Shaft Construction AAS.

An additional 4 feet has been added to V-bar and additional 32-#4-P301 bars have been added for possible change in drilled shaft or rock socket length. The additional V-bar length shall be cut off or included in the reinforcement lap if not required. The P bars shall be spaced similarly to that shown in Elevation, if required, or a lesser spacing if not required but not less than 6-inch centers.

Sonic logging testing shall be performed on all drilled shafts and rock sockets.

The tip of casing shall not extend into the rock socket elevation range reported in the Foundation Data table without approval by the engineer.

DETAILS OF INTERMEDIATE BENT NO. 3

Detailed JUN 2025
Checked JUN 2025

Note: This drawing is not to scale. Follow dimensions.

B_A9682_011_JST0020_BENT3-1.dgn 9:25:45 AM 6/9/2025

06/10/2025
Released for Construction

IMPROVE 70

STATE OF MISSOURI
DAVID MORANDEIRA
NUMBER PE-2021035906
PROFESSIONAL ENGINEER

THIS SHEET HAS BEEN SIGNED, SEALED AND DATED ELECTRONICALLY.

DATE PREPARED	
6/9/2025	
ROUTE	STATE
US-61	MO
DISTRICT	SHEET NO.
BR	A9682-12
COUNTY	
ST. CHARLES	
JOB NO.	
JST0020	
CONTRACT ID.	
PROJECT NO.	
BRIDGE NO.	
A9682	

DATE	DESCRIPTION

MISSOURI HIGHWAYS AND TRANSPORTATION COMMISSION
105 WEST CAPITOL
JEFFERSON CITY, MO 65102
1-888-ASK-MODOT (1-888-275-6636)

IMPROVE 70 ALLIANCE

HNTB
715 KIRK DRIVE
KANSAS CITY, MO 64105-1310
CERTIFICATE OF AUTHORITY
NO. 001270

Bartlett & West
601 MONROE ST., SUITE 201 - JEFFERSON CITY, MO 65101
TEL: 573-634-2022 FAX: 573-634-5960
CERTIFICATE OF AUTHORITY NO. 000107 - ENGINEERING
WWW.BARTLETTWEST.COM

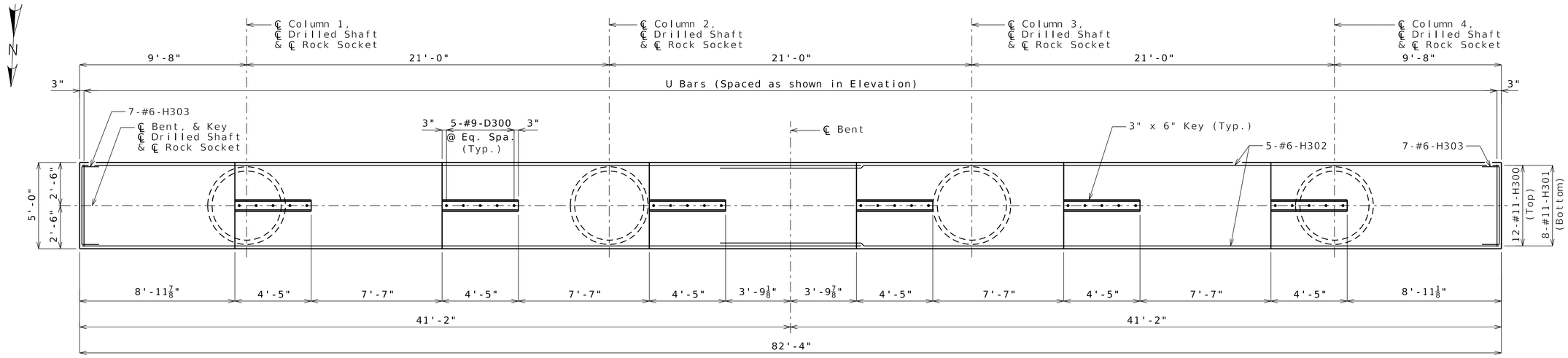

PLAN SHOWING REINFORCEMENT

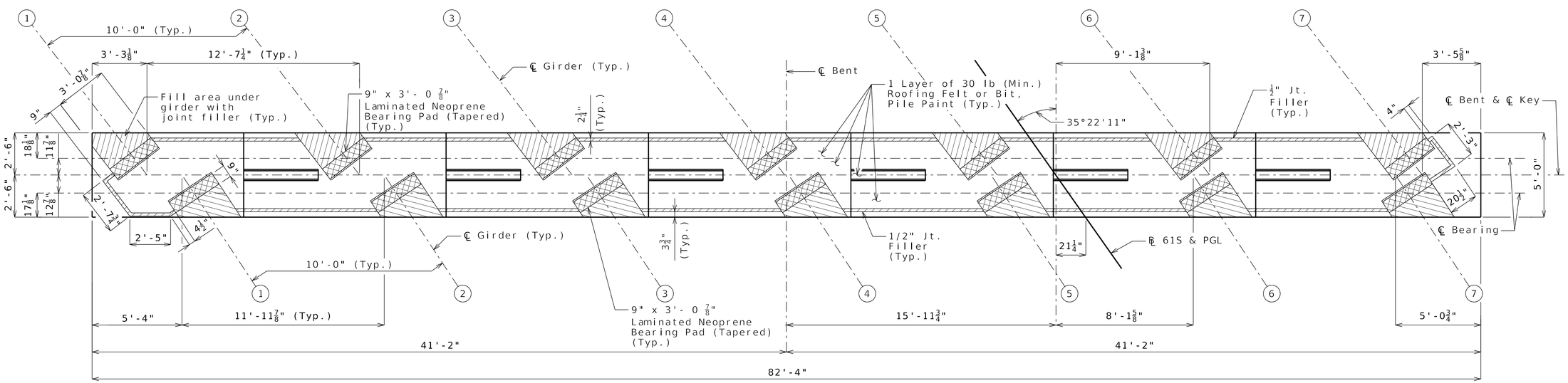

PLAN OF BEAM

General Notes:

Work this sheet with Sheets No. 12 and 14.

For steps 2 inches or more, use 2 1/4x 1/2-inch joint filler up vertical face.

Detailed JUN 2025
Checked JUN 2025

Note: This drawing is not to scale. Follow dimensions.

DETAILS OF INTERMEDIATE BENT NO. 3

STATE OF MISSOURI
DAVID MORANDEIRA
NUMBER PE-2021035906
PROFESSIONAL ENGINEER

THIS SHEET HAS BEEN SIGNED, SEALED AND DATED ELECTRONICALLY.

DATE PREPARED	
6/9/2025	
ROUTE	STATE
US-61	MO
DISTRICT	SHEET NO.
BR	A9682-13
COUNTY	
ST. CHARLES	
JOB NO.	
JST0020	
CONTRACT ID.	
PROJECT NO.	
BRIDGE NO.	
A9682	

DATE	DESCRIPTION

MISSOURI HIGHWAYS AND TRANSPORTATION COMMISSION
105 WEST CAPITOL
JEFFERSON CITY, MO 65102
1-888-ASK-MODOT (1-888-275-6636)

IMPROVE 70 ALLIANCE

HNTB
715 KIRK DRIVE
KANSAS CITY, MO 64105-1310
CERTIFICATE OF AUTHORITY NO. 001270

Bartlett & West
601 MONROE ST., SUITE 201 - JEFFERSON CITY, MO 65101
PHONE: 573-893-4336 FAX: 573-893-8189
CERTIFICATE OF AUTHORITY NO. 000107 - ENGINEERING
WWW.BARTLETTWEST.COM

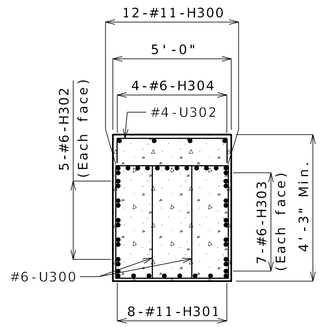

SECTION A-A

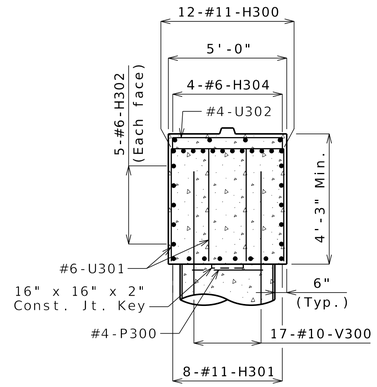

SECTION B-B

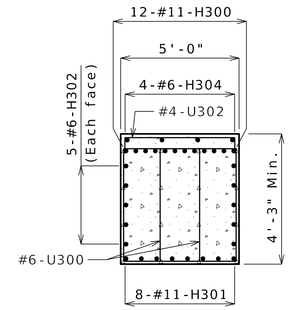

SECTION C-C

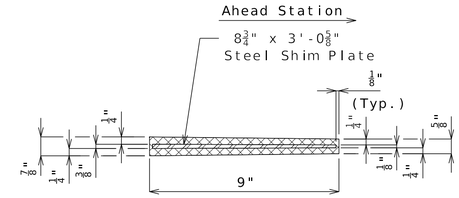

SECTION THRU LAMINATED NEOPRENE BEARING PAD (TAPERED) (BACK BRG.)
(7 Required)

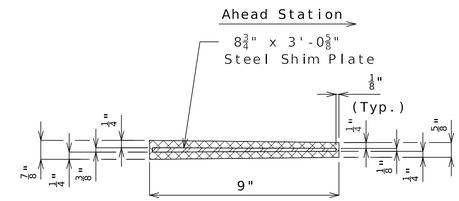

SECTION THRU LAMINATED NEOPRENE BEARING PAD (TAPERED) (AHEAD BRG.)
(7 Required)

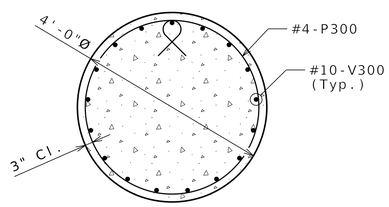

SECTION D-D

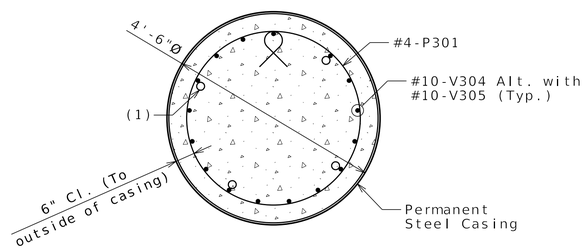

SECTION E-E

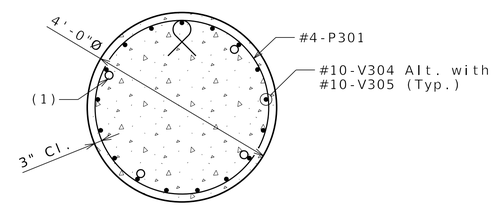

SECTION F-F

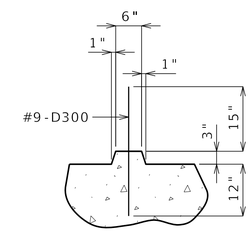

SECTION THRU KEY

(1) 2"Ø Steel Pipe for sonic logging testing (4 each shaft)

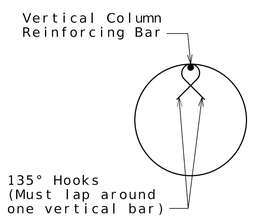

SEISMIC STIRRUP BAR
(#4-P301 & P302)

Note: Seismic stirrups hooks shall be staggered around the column at about one-third of the hoop circumference.

General Notes:

Work this sheet with Sheets No. 12 and 13.

DETAILS OF INTERMEDIATE BENT NO. 3

Detailed JUN 2025
Checked JUN 2025

Note: This drawing is not to scale. Follow dimensions.

STATE OF MISSOURI
DAVID MORANDEIRA
NUMBER PE-2021035906
PROFESSIONAL ENGINEER

THIS SHEET HAS BEEN SIGNED, SEALED AND DATED ELECTRONICALLY.

DATE PREPARED	
6/9/2025	
ROUTE: US-61	STATE: MO
DISTRICT: BR	SHEET NO.: A9682-14
COUNTY: ST. CHARLES	
JOB NO.: JST0020	
CONTRACT ID.	
PROJECT NO.	
BRIDGE NO.: A9682	

DATE	DESCRIPTION

MISSOURI HIGHWAYS AND TRANSPORTATION COMMISSION
105 WEST CAPITOL
JEFFERSON CITY, MO 65102
1-888-ASK-MODOT (1-888-275-6636)

IMPROVE 70 ALLIANCE

HNTB
715 KIRK DRIVE
KANSAS CITY, MO 64105-1310
CERTIFICATE OF AUTHORITY NO. 001270

Bartlett & West
401 MONROE ST, SUITE 201 - JEFFERSON CITY, MO 65101
PHONE: 573-634-2448 - FAX: 573-634-5448
CERTIFICATE OF AUTHORITY NO. 000157 - ENGINEERING
WWW.BARTLETTWEST.COM

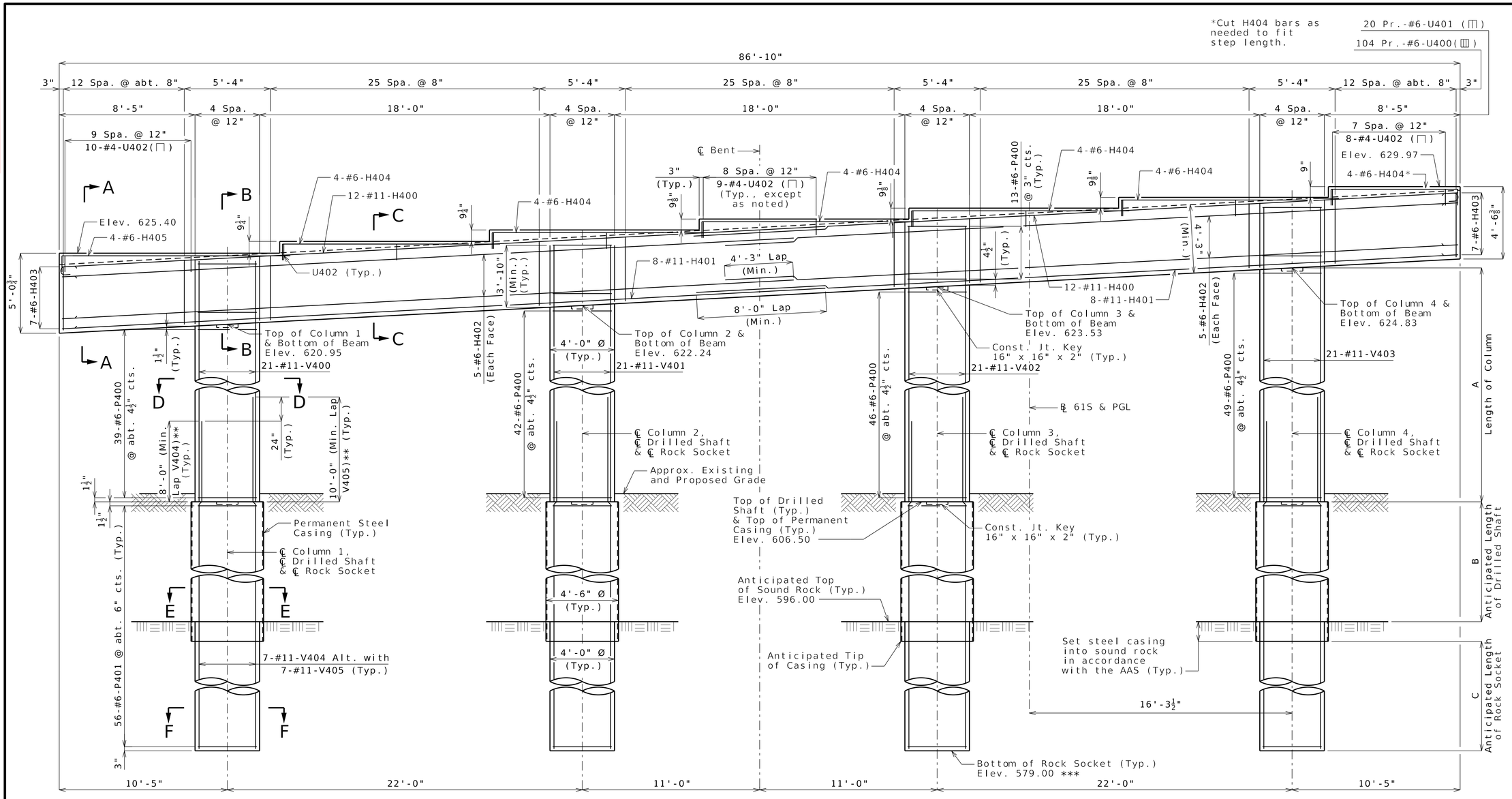

** Stagger alternating V404 and V405 splice by 24". For odd number of bars, two bars in each column may splice at the same location. Cut bars as needed.

ELEVATION

Beam keys not shown for clarity.

Dimension Variable Table			
Column	A	B	C
1	14'-5⅜"	10'-6"	14'-0"
2	15'-8⅞"	10'-6"	14'-0"
3	17'-0⅜"	10'-6"	14'-0"
4	18'-3⅞"	10'-6"	14'-0"

General Notes:

Work this sheet with Sheets No. 16 and 17.

Drilled shafts shall be constructed and inspected in accordance with the Bridge Geotechnical Memo and the project Drilled Shaft Construction AAS.

Thickness of permanent steel casing shall be in accordance with Drilled Shaft Construction AAS.

An additional 4 feet has been added to V-bar and additional 32-#6-P401 bars have been added for possible change in drilled shaft or rock socket length. The additional V-bar length shall be cut off or included in the reinforcement lap if not required. The P bars shall be spaced similarly to that shown in Elevation, if required, or a lesser spacing if not required but not less than 6-inch centers.

Sonic logging testing shall be performed on all drilled shafts and rock sockets.

The tip of casing shall not extend into the rock socket elevation range reported in the Foundation Data table without approval by the engineer.

DETAILS OF INTERMEDIATE BENT NO. 4

Detailed JUN 2025
Checked JUN 2025

Note: This drawing is not to scale. Follow dimensions.

B_A9682_013A_JST0020_BENT4-1.dgn 9:25:55 AM 6/9/2025

06/10/2025
Released for Construction

STATE OF MISSOURI
DAVID MORANDEIRA NUMBER PE-2021035906
PROFESSIONAL ENGINEER

THIS SHEET HAS BEEN SIGNED, SEALED AND DATED ELECTRONICALLY.

DATE PREPARED	
6/9/2025	
ROUTE	STATE
US-61	MO
DISTRICT	SHEET NO.
BR	A9682-15
COUNTY	
ST. CHARLES	
JOB NO.	
JST0020	
CONTRACT ID.	
PROJECT NO.	
BRIDGE NO.	
A9682	

DATE	DESCRIPTION

MISSOURI HIGHWAYS AND TRANSPORTATION COMMISSION
105 WEST CAPITOL
JEFFERSON CITY, MO 65102
1-888-ASK-MODOT (1-888-275-6636)

HNTB
715 KIRK DRIVE
KANSAS CITY, MO 64105-1310
CERTIFICATE OF AUTHORITY NO. 001270

Bartlett & West
601 MONROE ST., SUITE 201 - JEFFERSON CITY, MO 65101
PHONE: (573) 635-7228 FAX: (573) 635-2431
CERTIFICATE OF AUTHORITY NO. 000107 - ENGINEERING
WWW.BARTLETTWEST.COM

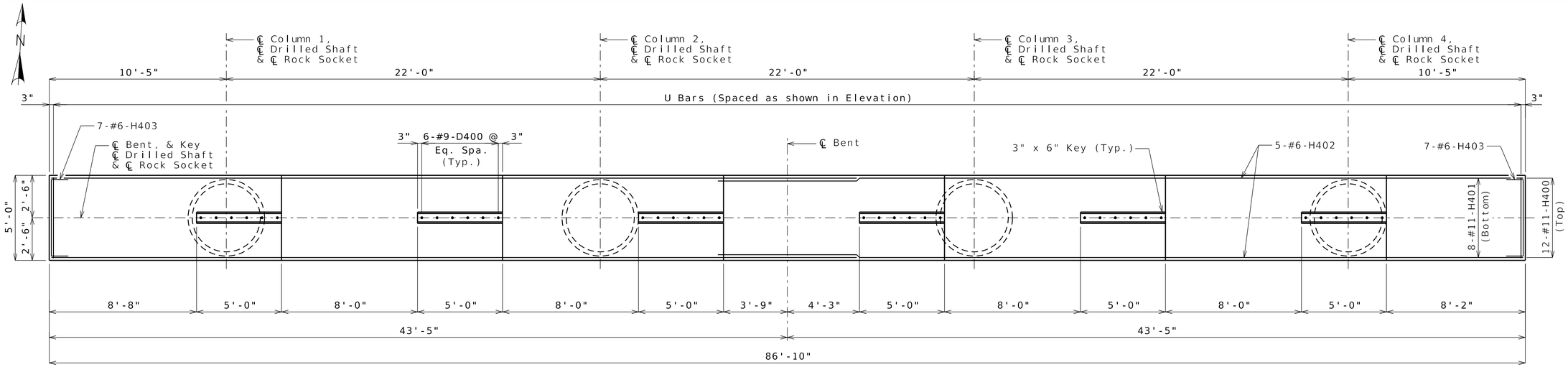

PLAN SHOWING REINFORCEMENT

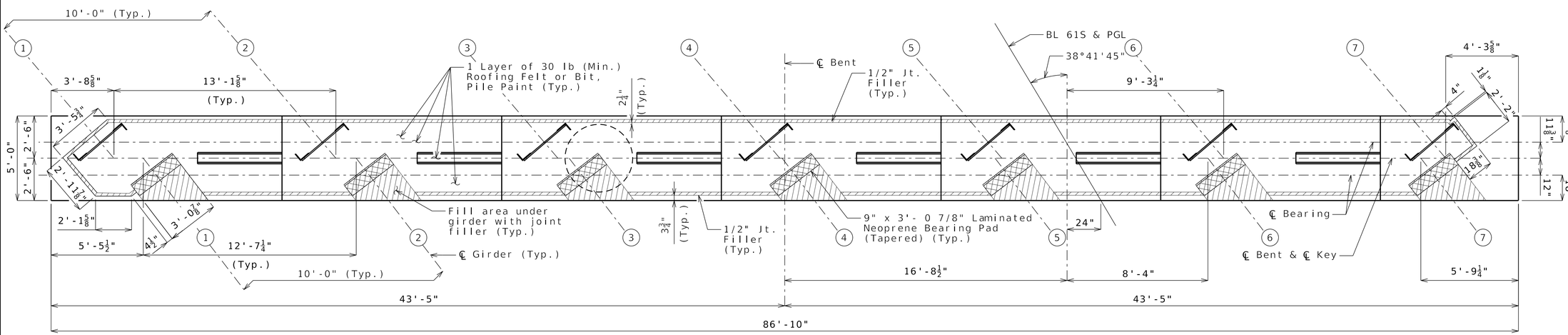

PLAN OF BEAM

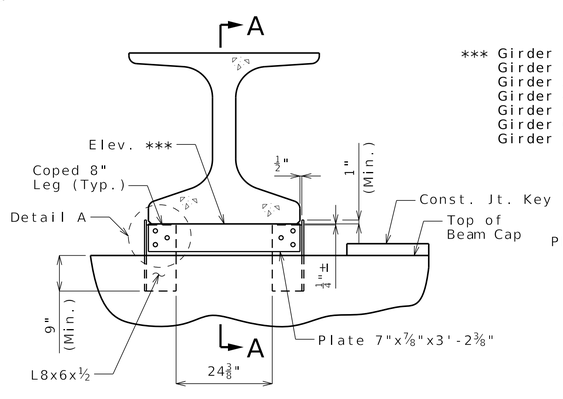

ELEVATION

*** Girder 1: 626.11
Girder 2: 626.92
Girder 3: 627.72
Girder 4: 628.52
Girder 5: 629.32
Girder 6: 630.10
Girder 7: 630.89

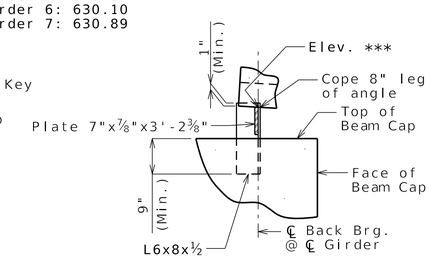

SECTION A-A

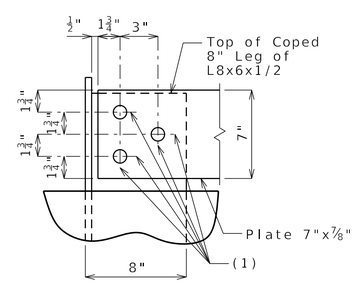

(1) ℄ 1 1/16" ⌀ Hole in angle (Field drilled) & plate for 1" ⌀ ASTM F3125 Grade A325 Type 1 bolts

DETAIL A

GIRDER CHAIR DETAILS

General Notes:

Work this sheet with Sheets No. 15 and 17.

For steps 2 inches or more, use 2 1/4x 1/2-inch joint filler up vertical face.

Structural steel for the girder beam chairs shall be coated with not less than 2 mils of inorganic zinc primer. Scratched or damaged surfaces are to be touched up in the field before concrete is poured. In lieu of coating, the girder beam chairs may be galvanized in accordance with ASTM A123.

Steel for chairs shall be ASTM A709 Grade 36.

Reinforcing steel shall be shifted to clear chairs.

DETAILS OF INTERMEDIATE BENT NO. 4

Detailed JUN 2025
Checked JUN 2025

Note: This drawing is not to scale. Follow dimensions.

STATE OF MISSOURI
DAVID MORANDEIRA
NUMBER PE-2021035906
PROFESSIONAL ENGINEER

THIS SHEET HAS BEEN SIGNED, SEALED AND DATED ELECTRONICALLY.

DATE PREPARED	6/9/2025
ROUTE	US-61
STATE	MO
DISTRICT	BR
SHEET NO.	A9682-16
COUNTY	ST. CHARLES
JOB NO.	JST0020
CONTRACT ID.	
PROJECT NO.	
BRIDGE NO.	A9682

DESCRIPTION

DATE

MISSOURI HIGHWAYS AND TRANSPORTATION COMMISSION
105 WEST CAPITOL
JEFFERSON CITY, MO 65102
1-888-ASK-MODOT (1-888-275-6636)

HNTB
715 KIRK DRIVE
KANSAS CITY, MO 64105-1310
CERTIFICATE OF AUTHORITY NO. 001270

Bartlett & West
601 MONROE ST. SUITE 201, JEFFERSON CITY, MO 65101
(573) 634-2448 FAX (573) 634-8291
CERTIFICATE OF AUTHORITY NO. 000107 - ENGINEERING
WWW.BARTLETTWEST.COM

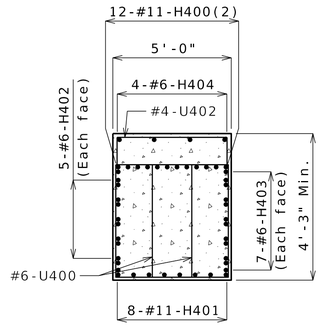

SECTION A-A

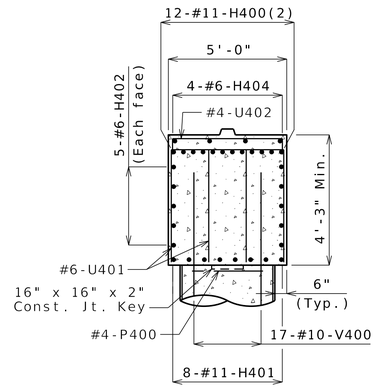

SECTION B-B

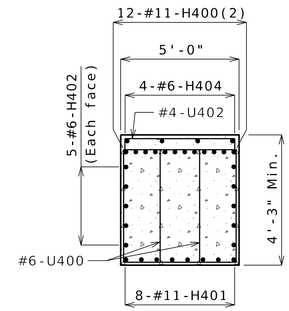

SECTION C-C

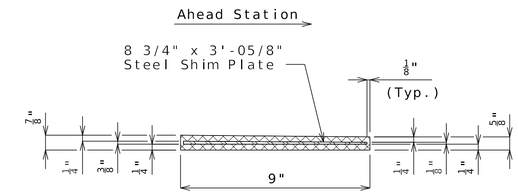

SECTION THRU LAMINATED NEOPRENE BEARING PAD (TAPERED)
(7 Required)

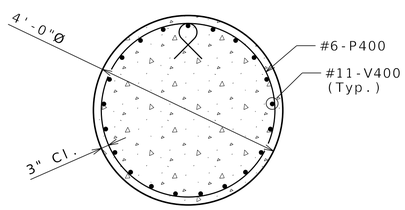

SECTION D-D

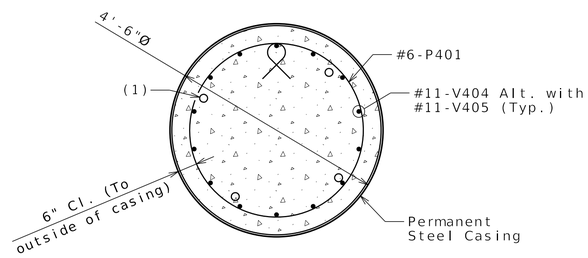

SECTION E-E

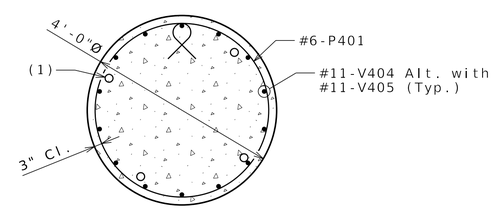

SECTION F-F

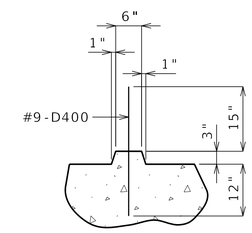

SECTION THRU KEY

(1) 2"Ø Steel Pipe for sonic logging testing (4 each shaft)

(2) Adjust bars as necessary to clear girder chair's embedded L-shape. Maintain 2 1/2" clear spacing between bars. Bundle bars horizontally if necessary.

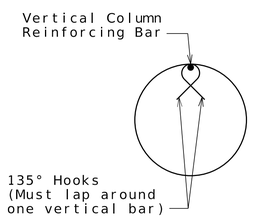

SEISMIC STIRRUP BAR
(#6-P400 & P401)

Note: Seismic stirrups hooks shall be staggered around the column at about one-third of the hoop circumference.

General Notes:

Work this sheet with Sheets No. 15 and 16.

Detailed JUN 2025
Checked JUN 2025

Note: This drawing is not to scale. Follow dimensions.

DETAILS OF INTERMEDIATE BENT NO. 4

STATE OF MISSOURI
DAVID MORANDEIRA
NUMBER PE-2021035906
PROFESSIONAL ENGINEER

THIS SHEET HAS BEEN SIGNED, SEALED AND DATED ELECTRONICALLY.

DATE PREPARED	6/9/2025
ROUTE	US-61
STATE	MO
DISTRICT	BR
SHEET NO.	A9682-17
COUNTY	ST. CHARLES
JOB NO.	JST0020
CONTRACT ID.	
PROJECT NO.	
BRIDGE NO.	A9682

DESCRIPTION

DATE

MISSOURI HIGHWAYS AND TRANSPORTATION COMMISSION
105 WEST CAPITOL
JEFFERSON CITY, MO 65102
1-888-ASK-MODOT (1-888-275-6636)

IMPROVE 70 ALLIANCE

HNTB
715 KIRK DRIVE
KANSAS CITY, MO 64105-1310
CERTIFICATE OF AUTHORITY NO. 001270

Bartlett & West
601 MONROE ST., SUITE 201 - JEFFERSON CITY, MO 65101
(573) 635-7700 - FAX (573) 635-7701
CERTIFICATE OF AUTHORITY NO. 000107 - ENGINEERING
WWW.BARTLETTWEST.COM

06/10/2025
Released for Construction

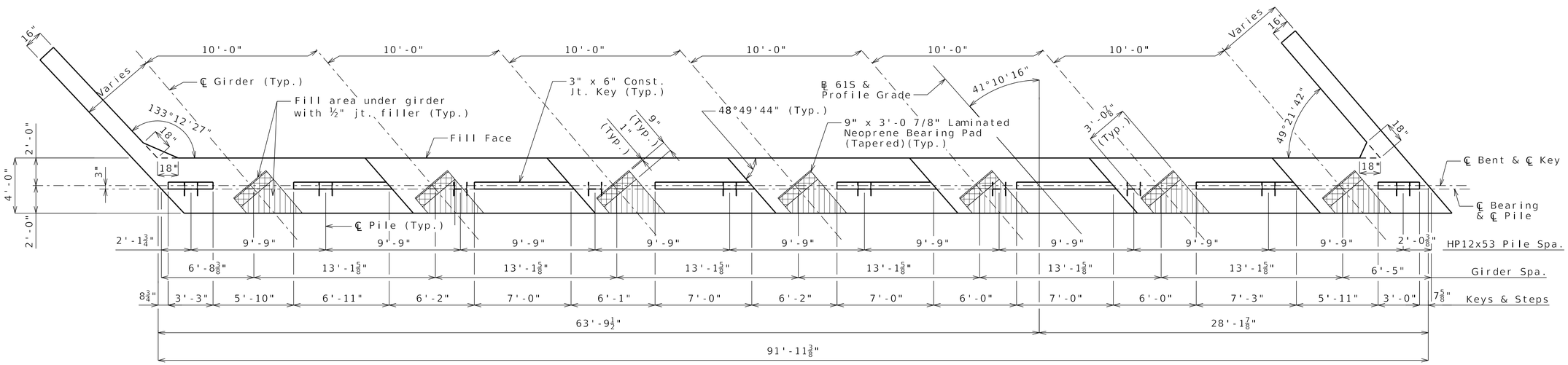

PLAN OF BEAM

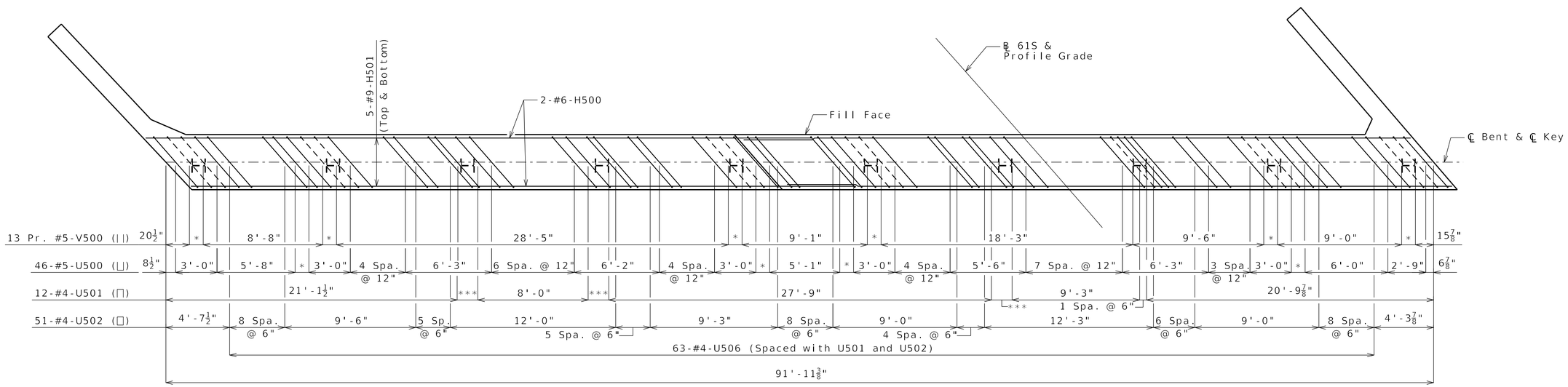

PLAN OF BEAM SHOWING REINFORCEMENT

Keys not shown for clarity.

* 1 Space @ 12"
** 2 Spaces @ 6"
*** 3 Spaces @ 6"

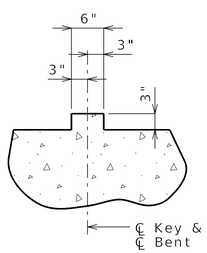

SECTION THRU KEY

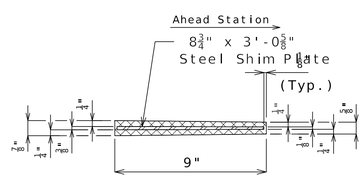

SECTION THRU LAMINATED NEOPRENE
BEARING PAD (TAPERED)

(7 Required)

General Notes:

Work this sheet with Sheets No. 19 and 20.

All U bars and pairs of V bars shall be placed parallel to skewed steps.

Reinforcing steel shall be shifted to clear piles. U bars shall clear piles by at least 1 1/2 inches.

DETAILS OF END BENT NO. 5

Detailed JUN 2025
Checked JUN 2025

Note: This drawing is not to scale. Follow dimensions.

STATE OF MISSOURI
DAVID MORANDEIRA
NUMBER
PE-2021035906
PROFESSIONAL ENGINEER

THIS SHEET HAS BEEN SIGNED, SEALED AND DATED ELECTRONICALLY.

DATE PREPARED	
6/9/2025	
ROUTE	STATE
US-61	MO
DISTRICT	SHEET NO.
BR	A9682-18
COUNTY	
ST. CHARLES	
JOB NO.	
JST0020	
CONTRACT ID.	
PROJECT NO.	
BRIDGE NO.	
A9682	

DESCRIPTION	DATE

MISSOURI HIGHWAYS AND TRANSPORTATION COMMISSION
105 WEST CAPITOL
JEFFERSON CITY, MO 65102
1-888-ASK-MODOT (1-888-275-6636)

IMPROVE 70 ALLIANCE

HNTB
715 KIRK DRIVE
KANSAS CITY, MO 64105-1310
CERTIFICATE OF AUTHORITY
NO. 001270

Bartlett & West
601 MONROE ST., SUITE 2-71 - JEFFERSON CITY, MO 65101
PHONE: (573) 635-2994 FAX: (573) 635-2994
CERTIFICATE OF AUTHORITY NO. 000167 - ENGINEERING
WWW.BARTLETTWEST.COM

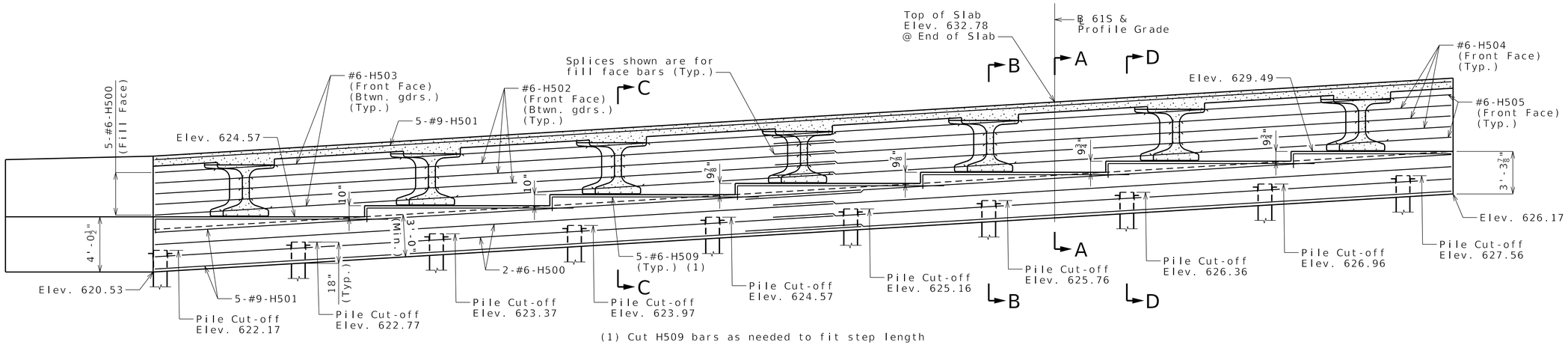

(1) Cut H509 bars as needed to fit step length

SECTION NEAR END BENT

Notes:
Lap Splice #6 - H500 bars = 4'-0" (Min.).
Lap Splice #9 - H501 bars = 8'-6" (Min.).

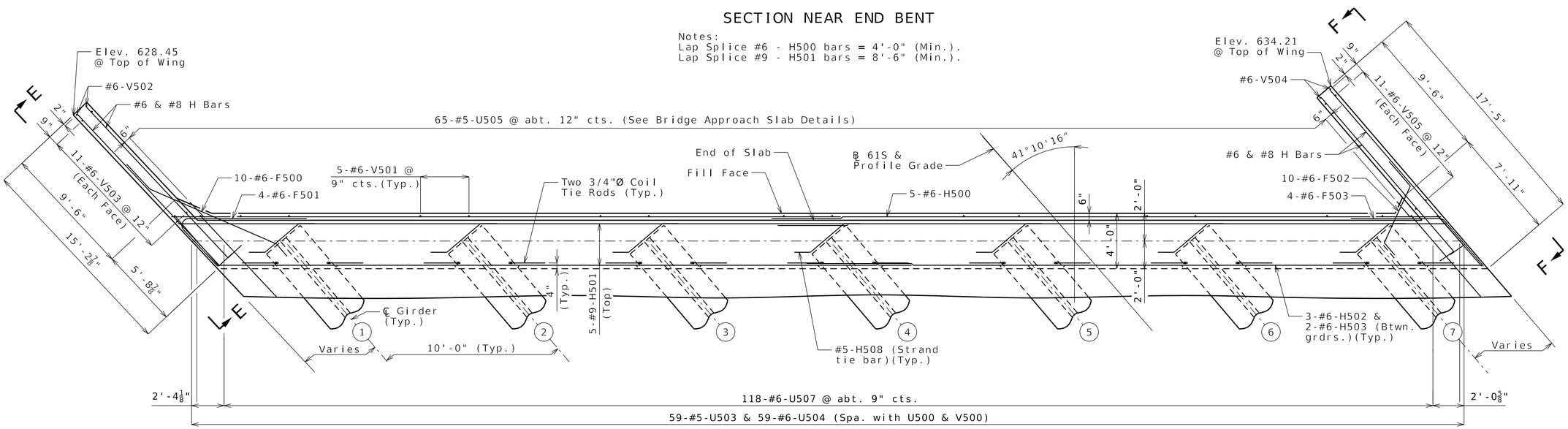

PART PLAN

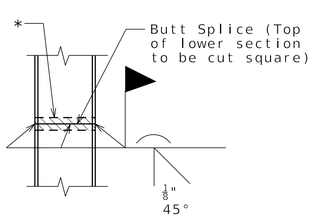

STEEL PILE SPLICE

(If required)

* Galvanizing material shall be omitted or removed one inch clear of weld locations in accordance with Sec 702.

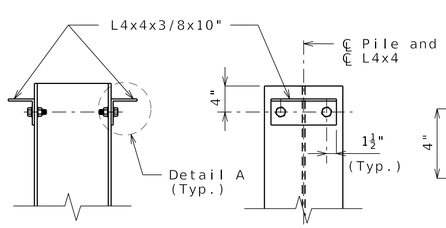

DETAILS OF HP PILE ANCHORS

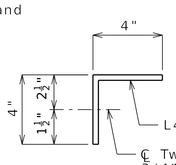

DETAIL A

Angles shall be coated with a minimum of two coats of non-aluminum epoxy mastic primer to provide a dry film thickness of 4 mils minimum, 8 mils maximum, or galvanized in accordance with Sec 1081. Bolts, washers and nuts shall be galvanized in accordance with AASHTO M 232 (ASTM A153), Class C.

General Notes:

Work this sheet with Sheets No. 18 and 20.

For Sections A-A, B-B, C-C & D-D and Elevations E-E & F-F, see Sheet No. 20.

The #6-F500 and #6-F502 bars shall be bent in the field to clear girders.

The U bars shall be placed parallel to skewed steps.

All concrete in the end bent above top of beam and below top of slab shall be Class B-2.

Strands at end of girders shall be field bent or, if necessary, cut on field to maintain 1 1/2-inch minimum clearance to fill face of end bent.

For location of coil tie rods and #5-H508 (strand tie bar), see Sheet No. 25.

For details of vertical drain at end bents, see Sheet No. 8.

For details of bridge approach slab, see Sheet No. 34.

DETAILS OF END BENT NO. 5

Detailed JUN 2025
Checked JUN 2025

Note: This drawing is not to scale. Follow dimensions.

STATE OF MISSOURI
DAVID MORANDEIRA
NUMBER
PE-2021035906
PROFESSIONAL ENGINEER
THIS SHEET HAS BEEN SIGNED, SEALED AND DATED ELECTRONICALLY.

DATE PREPARED
6/9/2025

ROUTE	STATE
US-61	MO
DISTRICT	SHEET NO.
BR	A9682-19

COUNTY
ST. CHARLES
JOB NO.
JST0020
CONTRACT ID.
PROJECT NO.
BRIDGE NO.
A9682

DESCRIPTION
DATE

MISSOURI HIGHWAYS AND TRANSPORTATION COMMISSION
105 WEST CAPITOL
JEFFERSON CITY, MO 65102
1-888-ASK-MODOT (1-888-275-6636)

IMPROVE 70 ALLIANCE

HNTB
715 KIRK DRIVE
KANSAS CITY, MO 64105-1310
CERTIFICATE OF AUTHORITY
NO. 001270

Bartlett & West
401 MONROE ST, SUITE 201 - JEFFERSON CITY, MO 65101
PHONE: 573-635-7700 FAX: 573-635-7702
CERTIFICATE OF AUTHORITY NO. 000167 - ENGINEERING
WWW.BARTLETTWEST.COM

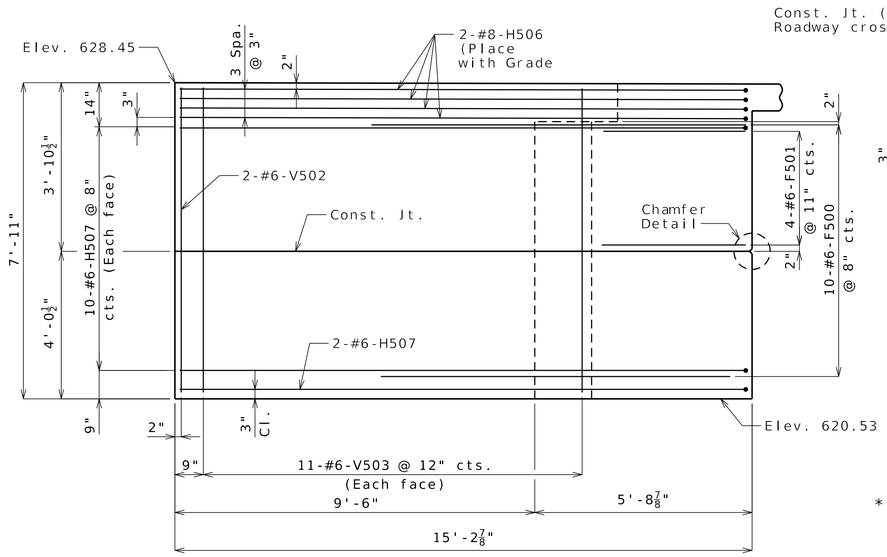

ELEVATION E-E

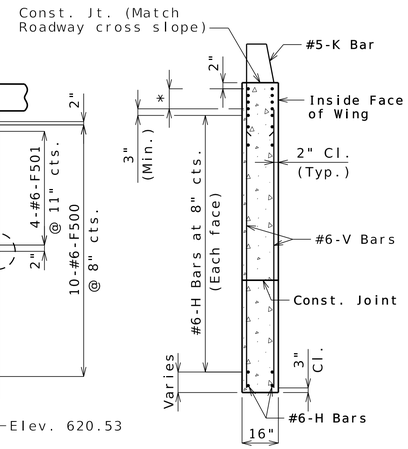

TYPICAL SECTION THRU WING

* #8-H Bars at 3" cts. (Each face)(Place with grade)

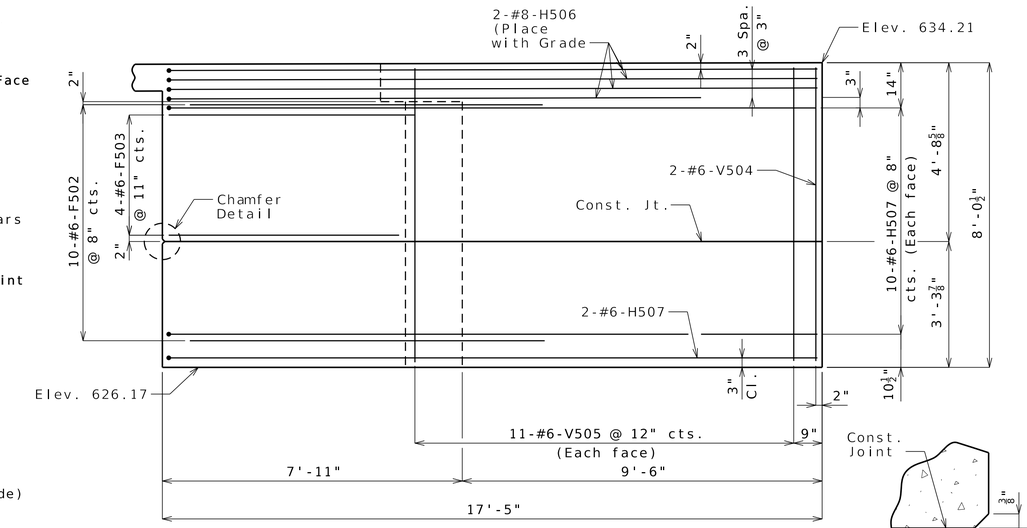

ELEVATION F-F

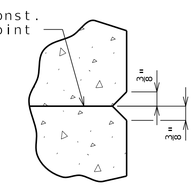

CHAMFER DETAIL

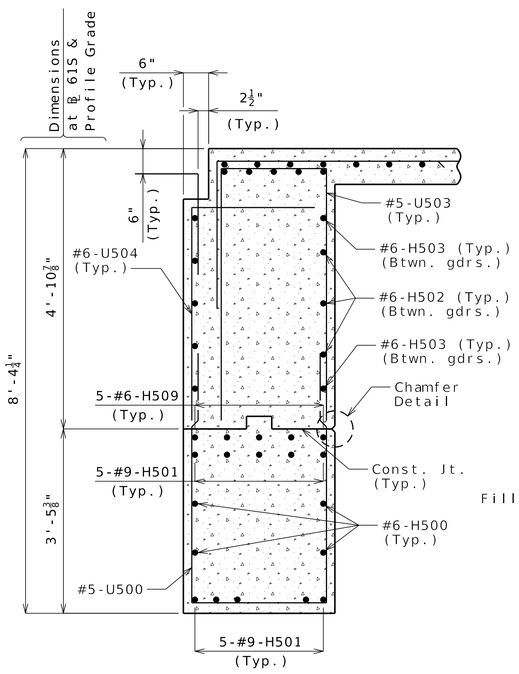

SECTION A-A

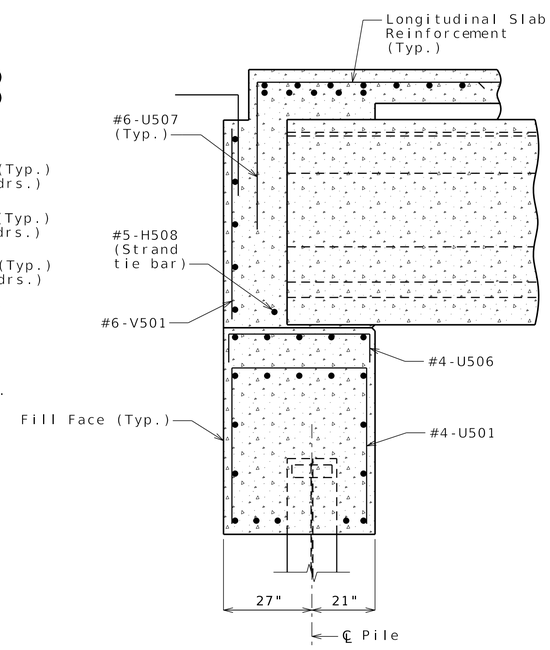

SECTION B-B

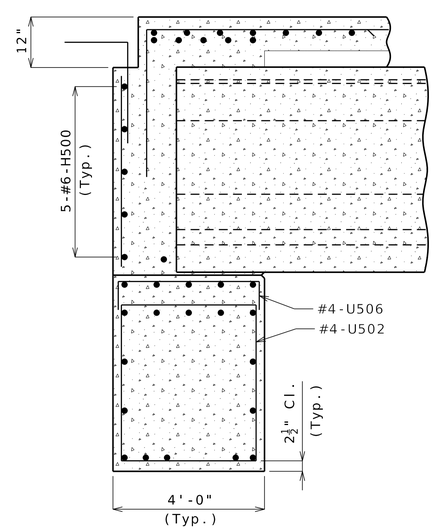

SECTION C-C

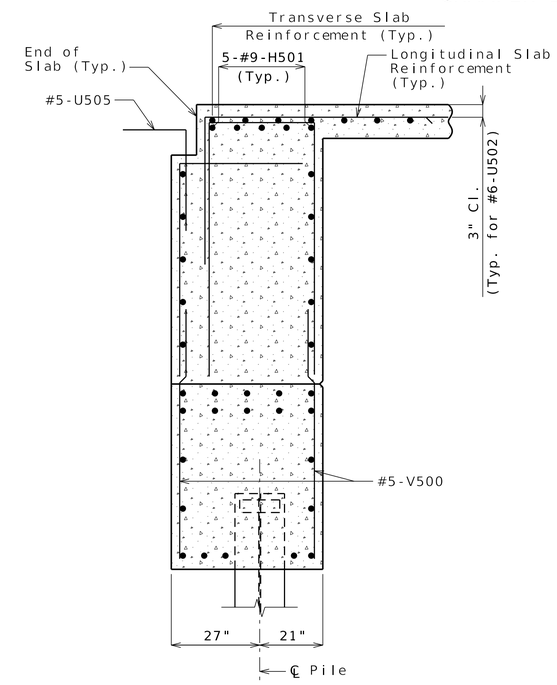

SECTION D-D

General Notes:

Work this sheet with Sheets No. 18 and 19.

For reinforcement of the barrier, see Sheet No. 33.

DETAILS OF END BENT NO. 5

Detailed JUN 2025
Checked JUN 2025

Note: This drawing is not to scale. Follow dimensions.

STATE OF MISSOURI
DAVID MORANDEIRA
NUMBER PE-2021035906
PROFESSIONAL ENGINEER

THIS SHEET HAS BEEN SIGNED, SEALED AND DATED ELECTRONICALLY.

DATE PREPARED	
6/9/2025	
ROUTE	STATE
US-61	MO
DISTRICT	SHEET NO.
BR	A9682-20
COUNTY	
ST. CHARLES	
JOB NO.	
JST0020	
CONTRACT ID.	
PROJECT NO.	
BRIDGE NO.	
A9682	

DATE	DESCRIPTION

MISSOURI HIGHWAYS AND TRANSPORTATION COMMISSION
105 WEST CAPITOL
JEFFERSON CITY, MO 65102
1-888-ASK-MODOT (1-888-275-6636)

HNTB
715 KIRK DRIVE
KANSAS CITY, MO 64105-1310
CERTIFICATE OF AUTHORITY NO. 001270

Bartlett & West
601 MONROE ST., SUITE 201 - JEFFERSON CITY, MO 65101
PHONE: 573-893-4337 FAX: 573-893-4338
CERTIFICATE OF AUTHORITY NO. 000107 - ENGINEERING
WWW.BARTLETTWEST.COM

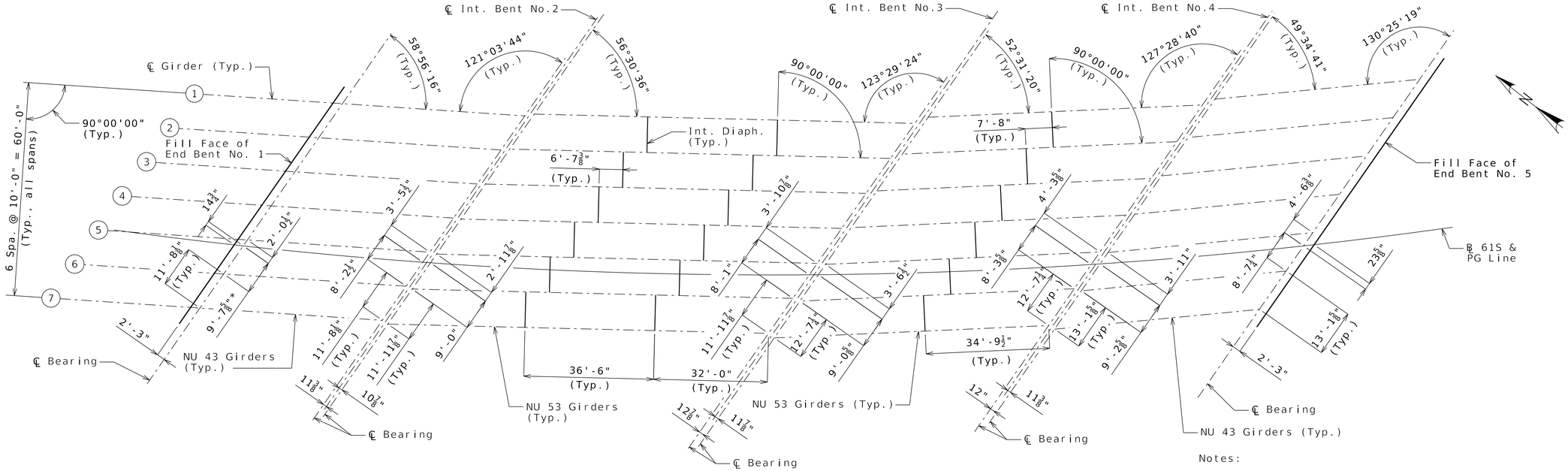

PLAN SHOWING LOCATION OF STEEL INTERMEDIATE DIAPHRAGMS

Longitudinal dimensions are horizontal.

Notes:

All dimensions are horizontal.

All bents are parallel.

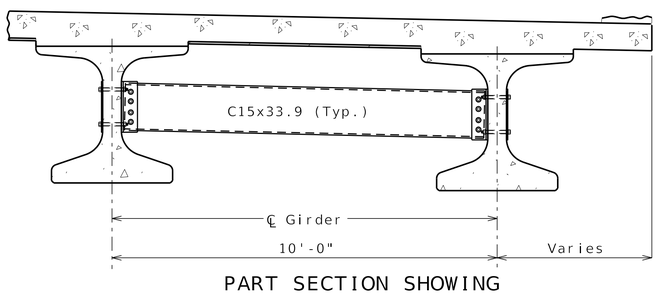

PART SECTION SHOWING INTERMEDIATE DIAPHRAGMS

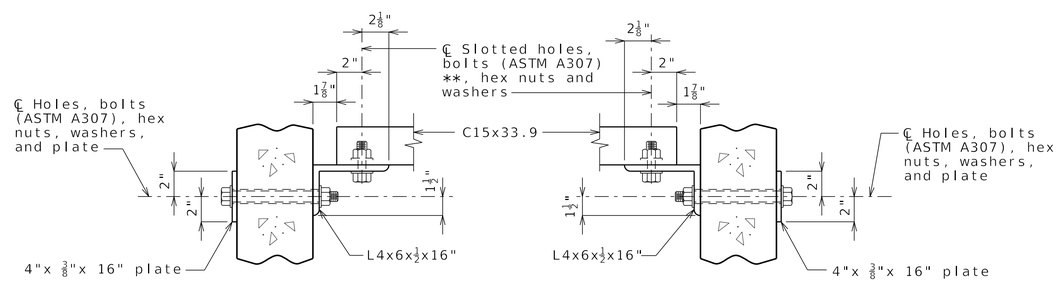

SECTION C-C

SECTION D-D

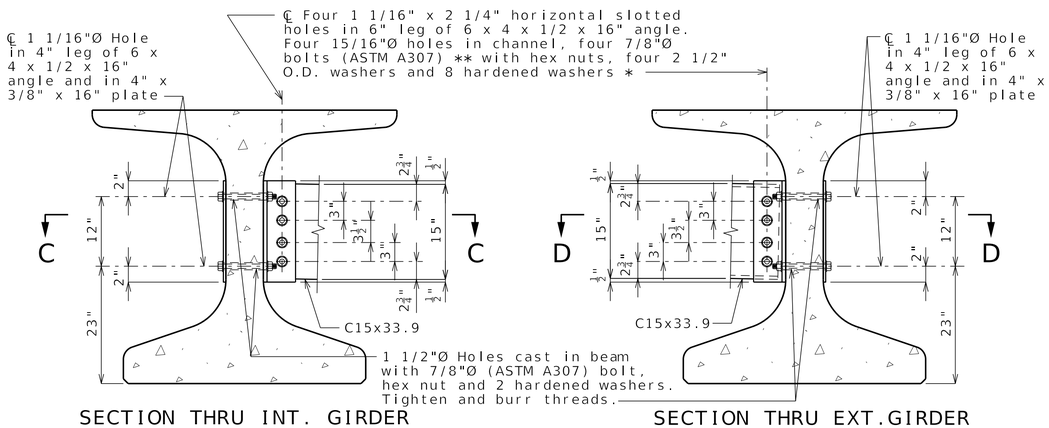

SECTION THRU INT. GIRDER AT DIAPHRAGM

SECTION THRU EXT.GIRDER AT DIAPHRAGM

STEEL DIAPHRAGM NOTES:

* In lieu of 2 1/2" outside diameter washers, contractor may substitute a 3/16" (Min. thickness) plate with four 15/16" Ø holes and one hardened washer per bolt.

** Bolts shall be tightened to provide a tension of one-half that specified in Sec 712 for high strength bolt installation. ASTM F3125 Grade A325 Type 1 bolts may be substituted for and installed in accordance with the requirements for the specified ASTM A307 bolts.

All diaphragm materials including bolts, nuts, and washers shall be galvanized.

Fabricated structural steel shall be ASTM A709 Grade 36 except as noted.

Shop drawings will not be required for steel intermediate diaphragms and angle connections.

Detailed JUN 2025
Checked JUN 2025

Note: This drawing is not to scale. Follow dimensions.

GIRDER LAYOUT

STATE OF MISSOURI
DAVID MORANDEIRA NUMBER PE-2021035906
PROFESSIONAL ENGINEER
THIS SHEET HAS BEEN SIGNED, SEALED AND DATED ELECTRONICALLY.

DATE PREPARED	6/9/2025
ROUTE	US-61
STATE	MO
DISTRICT	BR
SHEET NO.	A9682-21
COUNTY	ST. CHARLES
JOB NO.	JST0020
CONTRACT ID.	
PROJECT NO.	
BRIDGE NO.	A9682

DESCRIPTION | DATE

MISSOURI HIGHWAYS AND TRANSPORTATION COMMISSION
105 WEST CAPITOL
JEFFERSON CITY, MO 65102
1-888-ASK-MODOT (1-888-275-6636)

IMPROVE 70 ALLIANCE

HNTB
715 KIRK DRIVE
KANSAS CITY, MO 64105-1310
CERTIFICATE OF AUTHORITY NO. 001270

Bartlett & West
601 MONROE ST., SUITE 201 - JEFFERSON CITY, MO 65101
(573) 634-2448 - FAX (573) 634-8307
CERTIFICATE OF AUTHORITY NO. 000107 - ENGINEERING
WWW.BARTLETTWEST.COM

06/10/2025
Released for Construction

(1) Fabricator shall apply a bond breaker to this region.

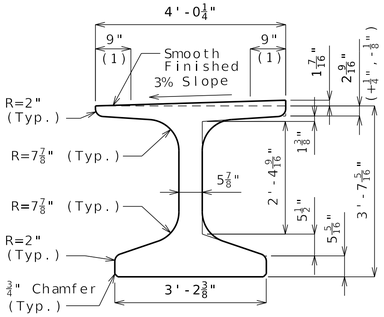

DIMENSIONS

(2) Outer strands tensioned to 2.02 kips/strand and inner strands to 8 kips/strand. Placed symmetrical about ℄ Girder. May be moved laterally in pairs.

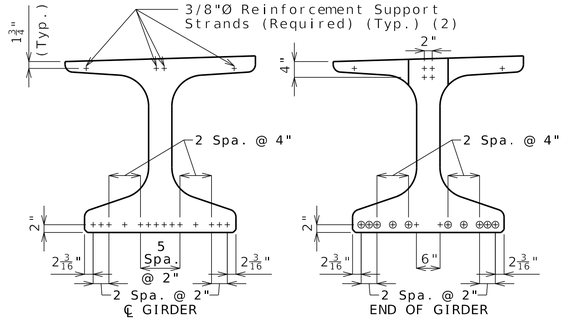

STRAND ARRANGEMENT

+ Indicates prestressing strand.

○ Indicates cut & shop bend with 3'-0" projection.

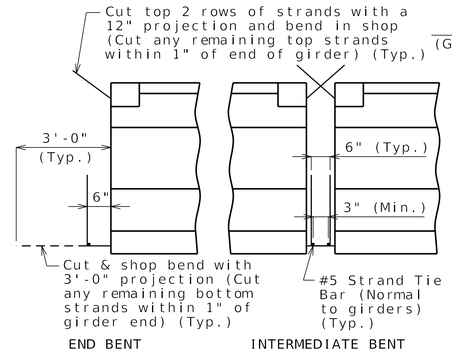

STRANDS AT GIRDER ENDS

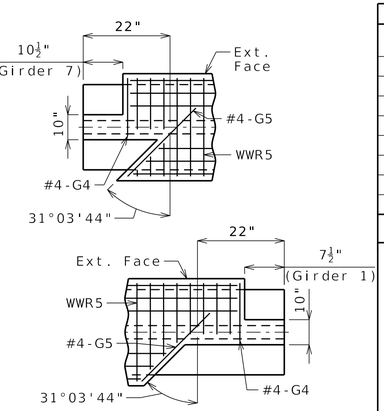

LEFT EXTERIOR GIRDER AT INTERMEDIATE BENT

Rotate 180° for right ext.

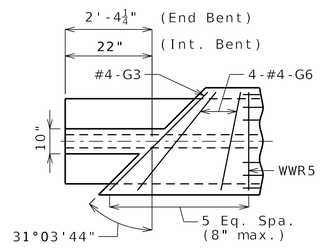

INTERIOR GIRDER AT ALL BENTS & EXTERIOR GIRDER AT END BENT

TOP FLANGE BLOCKOUT

Bill of Reinforcing Steel - Each Girder			
No.	Size/ Mark	Length	Shape
166	5 B1	5'-1"	11S
186	4 D1	4'-0"	9S
2	4 G3	4'-6"	20
2	4 G4	2'-3"	20
2	4 G5	3'-1"	20
8	4 G6	Varies	20

Bending Diagrams

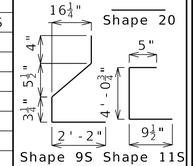

Welded Wire Reinforcement - Each Girder

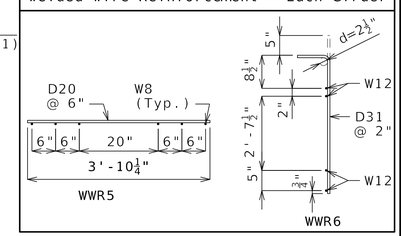

All dimensions are out to out.

Hooks and bends shall be in accordance with the CRSI Manual of Standard Practice for Detailing Reinforced Concrete Structures, Stirrup and Tie Dimensions.

Actual bar lengths are measured along centerline of bar to the nearest inch.

Minimum clearance to reinforcing shall be one inch.

All bar reinforcement shall be Grade 60.

The two D1 bars may be furnished as one bar at the fabricator's option.

All B1 bars shall be epoxy coated.

G4 and G5 not required for interior girders. Half no. of G3, G4, G5 and G6 not required for ext. girders of end spans.

General Notes:

Concrete for prestressed girders shall be Class A-1 with f'c = 8500 psi and f'ci = 6500 psi.

Use 14 strands, 0.6"Ø Grade 270, with an initial prestress force of 615 kips.

Pretensioned members shall be in accordance with Sec 1029.

Fabricator shall be responsible for location and design of lifting devices.

Exterior and interior girders are the same except: coil ties, top flange blockout, and application of bond breaker.

The contractor shall provide bracing necessary for lateral and torsional stability of the girders during construction of the concrete slab and remove the bracing after the slab has attained 75% design strength. Contractor shall not drill holes in the girders.

For Girder Camber Diagram, see Sheet No. 28.

For location of coil ties at concrete diaphragms and integral bents, see Sheets No. 6 and 26.

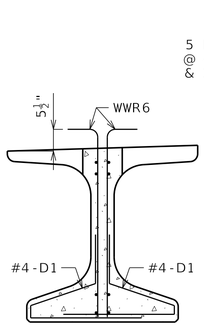

SECTION A-A

Strands not shown for clarity.

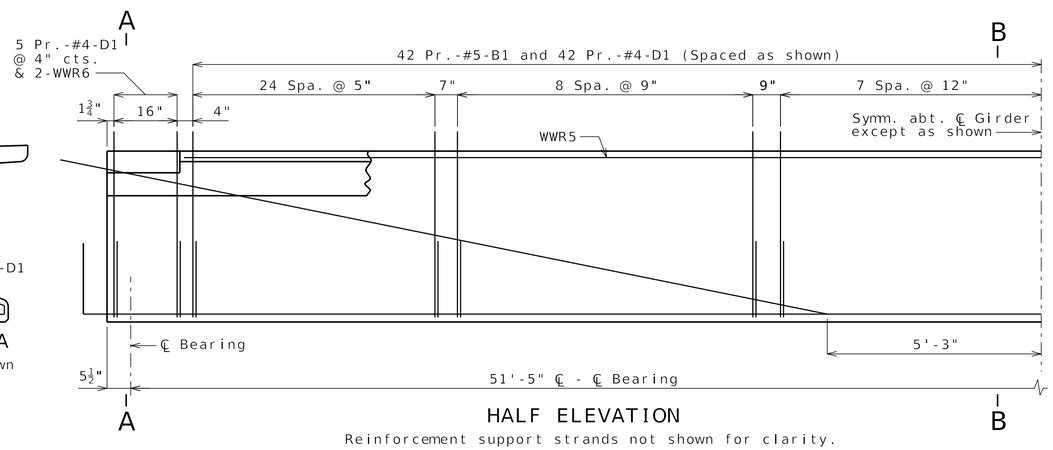

HALF ELEVATION

Reinforcement support strands not shown for clarity.

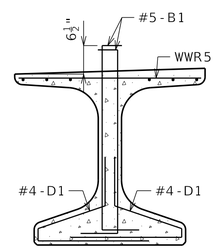

SECTION B-B

Strands not shown for clarity.

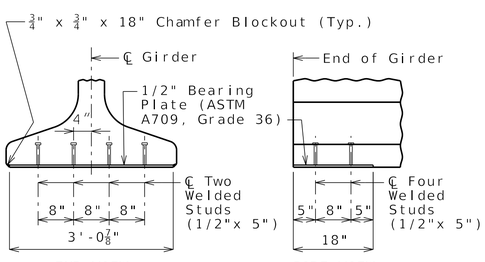

BEARING PLATE

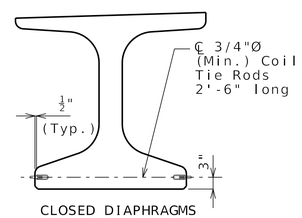

CLOSED DIAPHRAGMS AND INTEGRAL BENTS

COIL TIES

Exclude coil tie at exterior face of exterior girders except at integral end bents.

Detailed JUN 2025
Checked JUN 2025

Note: This drawing is not to scale. Follow dimensions.

NU-GIRDERS - SPAN (1-2)

STATE OF MISSOURI
DAVID MORANDEIRA
NUMBER PE-2021035906
PROFESSIONAL ENGINEER

THIS SHEET HAS BEEN SIGNED, SEALED AND DATED ELECTRONICALLY.

DATE PREPARED 6/9/2025

ROUTE	STATE
US-61	MO
DISTRICT	SHEET NO.
BR	A9682-22

COUNTY: ST. CHARLES
JOB NO.: JST0020
CONTRACT ID.:
PROJECT NO.:
BRIDGE NO.: A9682

DATE	DESCRIPTION

MISSOURI HIGHWAYS AND TRANSPORTATION COMMISSION
105 WEST CAPITOL
JEFFERSON CITY, MO 65102
1-888-ASK-MODOT (1-888-275-6636)

HNTB
715 KIRK DRIVE
KANSAS CITY, MO 64105-1310
CERTIFICATE OF AUTHORITY NO. 001270

Bartlett & West
601 MONROE ST., SUITE 201 • JEFFERSON CITY, MO 65101
PHONE: 573-893-1911 • FAX: 573-893-1931
CERTIFICATE OF AUTHORITY NO. 000107 - ENGINEERING
WWW.BARTLETTWEST.COM

06/10/2025
Released for Construction

(1) Fabricator shall apply a bond breaker to this region.

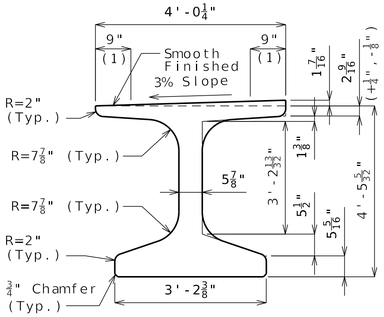

DIMENSIONS

(2) Outer strands tensioned to 2.02 kips/strand and inner strands to 8 kips/strand. Placed symmetrical about ℄ Girder. May be moved laterally in pairs.

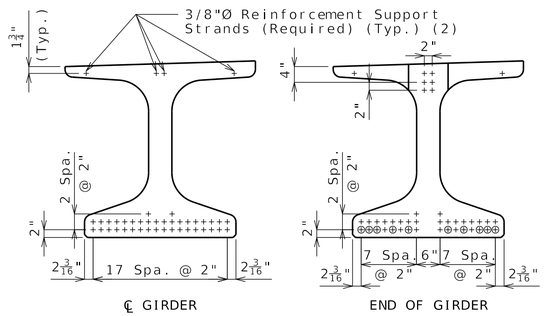

STRAND ARRANGEMENT

+ Indicates prestressing strand.

○ Indicates cut & shop bend with 3'-0" projection.

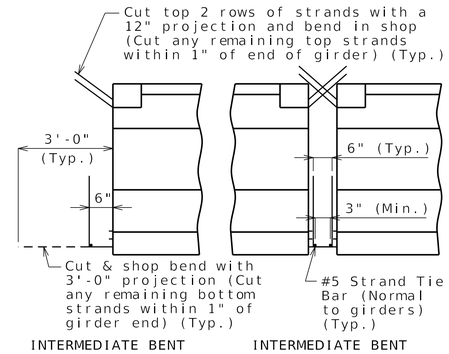

STRANDS AT GIRDER ENDS

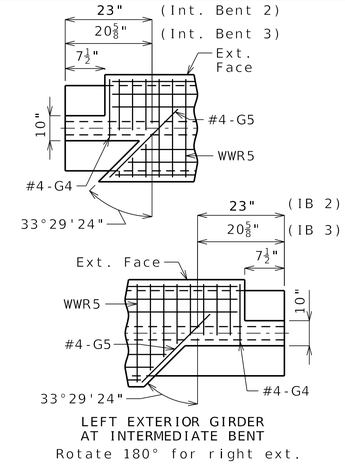

LEFT EXTERIOR GIRDER AT INTERMEDIATE BENT

Rotate 180° for right ext.

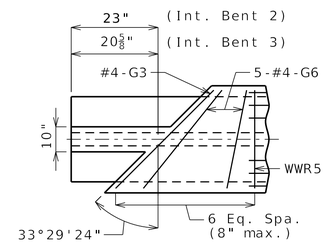

INTERIOR GIRDER AT ALL BENTS

TOP FLANGE BLOCKOUT

Bill of Reinforcing Steel - Each Girder			
No.	Size/ Mark	Length	Shape
278	5 B1	5'-11"	11S
298	4 D1	4'-0"	9S
2	4 G3	4'-7"	20
2	4 G4	2'-3"	20
2	4 G5	3'-2"	20
10	4 G6	Varies	20

Bending Diagrams

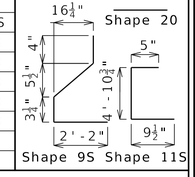

Welded Wire Reinforcement - Each Girder

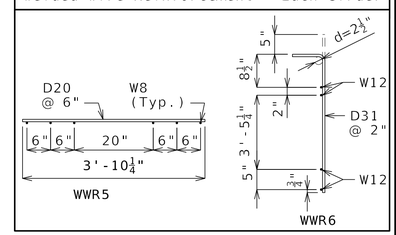

All dimensions are out to out.

Hooks and bends shall be in accordance with the CRSI Manual of Standard Practice for Detailing Reinforced Concrete Structures, Stirrup and Tie Dimensions.

Actual bar lengths are measured along centerline of bar to the nearest inch.

Minimum clearance to reinforcing shall be one inch.

All bar reinforcement shall be Grade 60.

The two D1 bars may be furnished as one bar at the fabricator's option.

All B1 bars shall be epoxy coated.

G4 and G5 not required for interior girders. G3 and G6 not required for exterior girders of intermediate spans.

General Notes:

Concrete for prestressed girders shall be Class A-1 with f'c = 8500 psi and f'ci = 6500 psi.

Use 38 strands, 0.6"Ø Grade 270, with an initial prestress force of 1670 kips.

Pretensioned members shall be in accordance with Sec 1029.

Fabricator shall be responsible for location and design of lifting devices.

Exterior and interior girders are the same except: coil ties, top flange blockout, application of bond breaker, and holes for steel intermediate diaphragms.

For Girder Camber Diagram, see Sheet No. 28.

The 1 1/2"Ø holes shall be cast in the web for steel intermediate diaphragms. Drilling is not allowed. For location of holes and details of steel intermediate diaphragms, see Sheet No. 21.

For location of coil ties at concrete diaphragms, see Sheets No. 26 and 27.

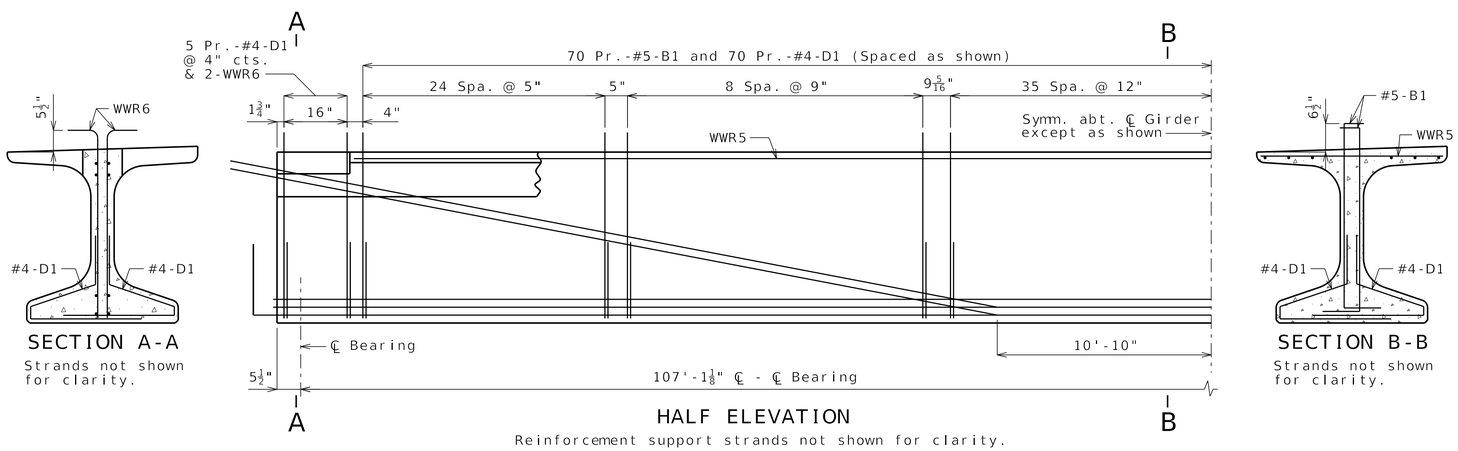

SECTION A-A

Strands not shown for clarity.

HALF ELEVATION

Reinforcement support strands not shown for clarity.

SECTION B-B

Strands not shown for clarity.

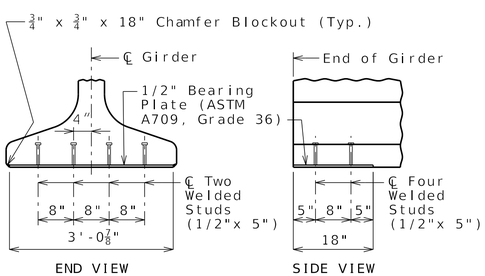

END VIEW

SIDE VIEW

BEARING PLATE

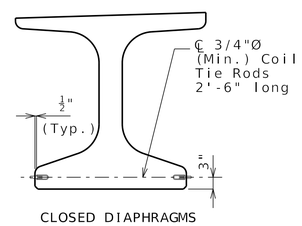

CLOSED DIAPHRAGMS

COIL TIES

Exclude coil tie at exterior face of exterior girders.

Detailed JUN 2025
Checked JUN 2025

Note: This drawing is not to scale. Follow dimensions.

NU-GIRDERS - SPAN (2-3)

STATE OF MISSOURI
DAVID MORANDEIRA NUMBER PE-2021035906
PROFESSIONAL ENGINEER

THIS SHEET HAS BEEN SIGNED, SEALED AND DATED ELECTRONICALLY.

DATE PREPARED	
6/9/2025	
ROUTE	STATE
US-61	MO
DISTRICT	SHEET NO.
BR	A9682-23
COUNTY	
ST. CHARLES	
JOB NO.	
JST0020	
CONTRACT ID.	
PROJECT NO.	
BRIDGE NO.	
A9682	

DATE	DESCRIPTION

MISSOURI HIGHWAYS AND TRANSPORTATION COMMISSION
105 WEST CAPITOL
JEFFERSON CITY, MO 65102
1-888-ASK-MODOT (1-888-275-6636)

IMPROVE 70 ALLIANCE

HNTB
715 KIRK DRIVE
KANSAS CITY, MO 64105-1310
CERTIFICATE OF AUTHORITY NO. 001270

Bartlett & West
601 MONROE ST., SUITE 201 • JEFFERSON CITY, MO 65101
PHONE: 573-893-4337 FAX: 573-893-8331
CERTIFICATE OF AUTHORITY NO. 000107 - ENGINEERING
WWW.BARTLETTWEST.COM

06/10/2025
Released for Construction

(1) Fabricator shall apply a bond breaker to this region.

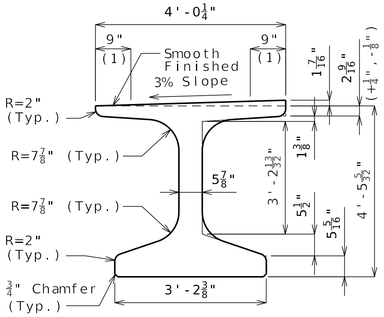

DIMENSIONS

(2) Outer strands tensioned to 2.02 kips/strand and inner strands to 8 kips/strand. Placed symmetrical about ℄ Girder. May be moved laterally in pairs.

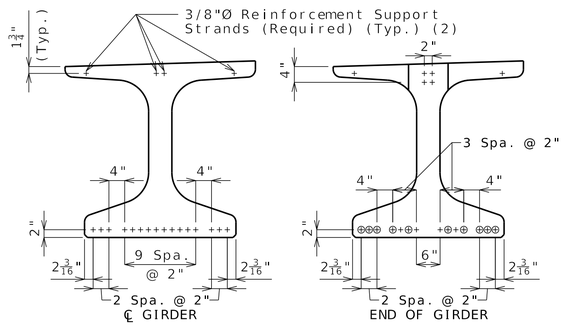

STRAND ARRANGEMENT

+ Indicates prestressing strand.

o Indicates cut & shop bend with 3'-0" projection.

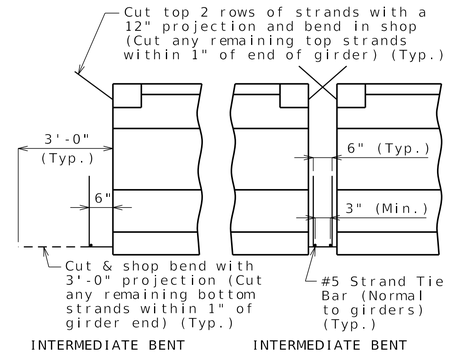

STRANDS AT GIRDER ENDS

TABLE OF DIMENSIONS		
Girder No.	1-5	6 & 7
*	6½"	7½"
**	5'-11"	6'-0"
***	4'-10¾"	4'-11¾"

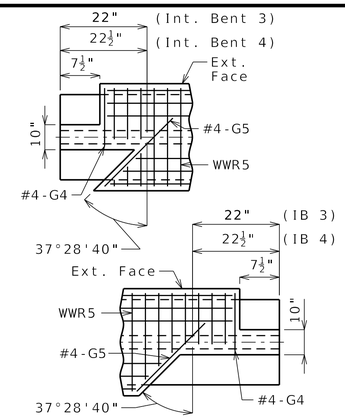

LEFT EXTERIOR GIRDER AT INTERMEDIATE BENT

Rotate 180° for right ext.

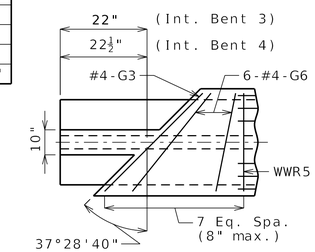

INTERIOR GIRDER AT ALL BENTS

TOP FLANGE BLOCKOUT

Bill of Reinforcing Steel - Each Girder			
No.	Size/ Mark	Length	Shape
218	5 B1	**	11S
238	4 D1	4'-0"	9S
2	4 G3	4'-10"	20
2	4 G4	2'-3"	20
2	4 G5	3'-4"	20
12	4 G6	Varies	20

Bending Diagrams

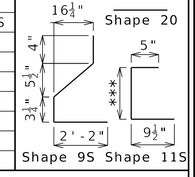

Welded Wire Reinforcement - Each Girder

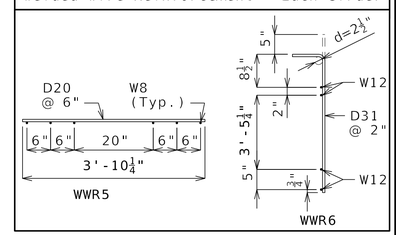

All dimensions are out to out.

Hooks and bends shall be in accordance with the CRSI Manual of Standard Practice for Detailing Reinforced Concrete Structures, Stirrup and Tie Dimensions.

Actual bar lengths are measured along centerline of bar to the nearest inch.

Minimum clearance to reinforcing shall be one inch.

All bar reinforcement shall be Grade 60.

The two D1 bars may be furnished as one bar at the fabricator's option.

All B1 bars shall be epoxy coated.

G4 and G5 not required for interior girders. G3 and G6 not required for exterior girders of intermediate spans.

General Notes:

Concrete for prestressed girders shall be Class A-1 with f'c = 8500 psi and f'ci = 6500 psi.

Use 16 strands, 0.6"Ø Grade 270, with an initial prestress force of 703 kips.

Pretensioned members shall be in accordance with Sec 1029.

Fabricator shall be responsible for location and design of lifting devices.

Exterior and interior girders are the same except: coil ties, top flange blockout, application of bond breaker, and holes for steel intermediate diaphragms.

For Girder Camber Diagram, see Sheet No. 28.

The 1 1/2"Ø holes shall be cast in the web for steel intermediate diaphragms. Drilling is not allowed. For location of holes and details of steel intermediate diaphragms, see Sheet No. 21.

For location of coil ties at concrete diaphragms, see Sheets No. 26 and 27.

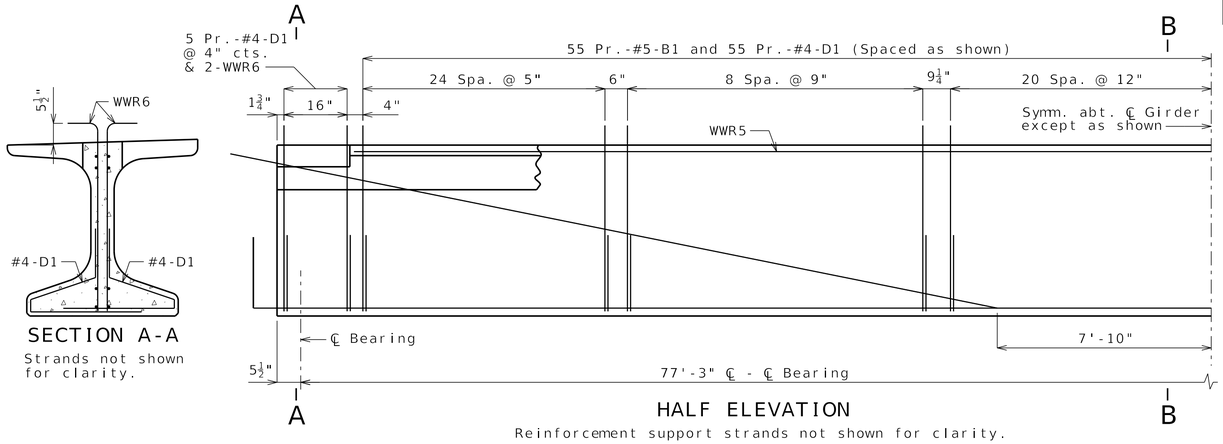

SECTION A-A

Strands not shown for clarity.

HALF ELEVATION

Reinforcement support strands not shown for clarity.

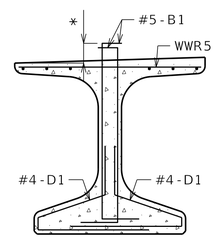

SECTION B-B

Strands not shown for clarity.

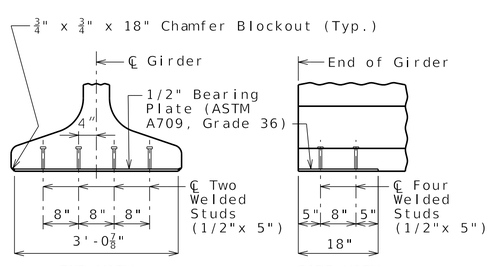

END VIEW

SIDE VIEW

BEARING PLATE

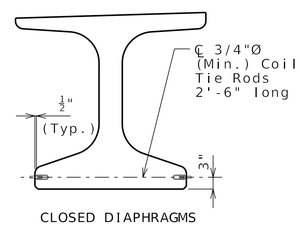

CLOSED DIAPHRAGMS

COIL TIES

Exclude coil tie at exterior face of exterior girders.

Detailed JUN 2025
Checked JUN 2025

Note: This drawing is not to scale. Follow dimensions.

NU-GIRDERS - SPAN (3-4)

STATE OF MISSOURI
DAVID MORANDEIRA NUMBER PE-2012035906
PROFESSIONAL ENGINEER

THIS SHEET HAS BEEN SIGNED, SEALED AND DATED ELECTRONICALLY.

DATE PREPARED 6/9/2025

ROUTE	STATE
US-61	MO
DISTRICT	SHEET NO.
BR	A9682-24

COUNTY: ST. CHARLES

JOB NO. JST0020

CONTRACT ID.

PROJECT NO.

BRIDGE NO. A9682

DATE	DESCRIPTION

MISSOURI HIGHWAYS AND TRANSPORTATION COMMISSION
105 WEST CAPITOL
JEFFERSON CITY, MO 65102
1-888-ASK-MODOT (1-888-275-6636)

IMPROVE 70 ALLIANCE

HNTB
715 KIRK DRIVE
KANSAS CITY, MO 64105-1310
CERTIFICATE OF AUTHORITY NO. 001270

Bartlett & West
601 MONROE ST., SUITE 201 • JEFFERSON CITY, MO 65101
PHONE: 573-893-4336 FAX: 573-893-8486
CERTIFICATE OF AUTHORITY NO. 000107 - ENGINEERING
WWW.BARTLETTWEST.COM

06/10/2025
Released for Construction

(1) Fabricator shall apply a bond breaker to this region.

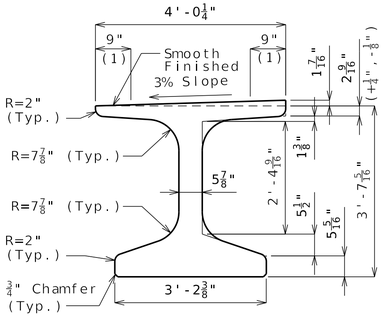

DIMENSIONS

(2) Outer strands tensioned to 2.02 kips/strand and inner strands to 8 kips/strand. Placed symmetrical about ℄ Girder. May be moved laterally in pairs.

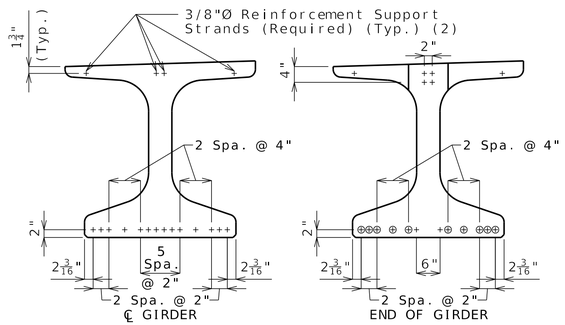

STRAND ARRANGEMENT

+ Indicates prestressing strand.

○ Indicates cut & shop bend with 3'-0" projection.

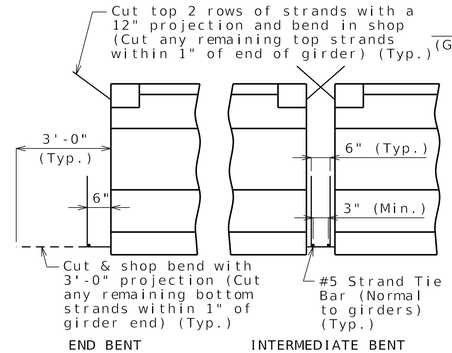

STRANDS AT GIRDER ENDS

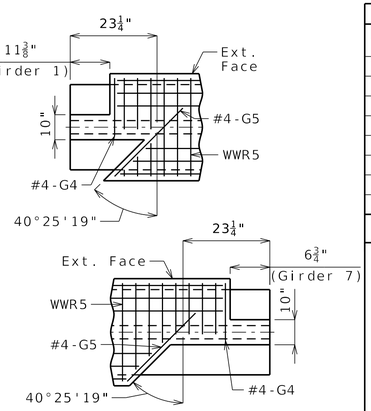

LEFT EXTERIOR GIRDER AT INTERMEDIATE BENT

Rotate 180° for right ext.

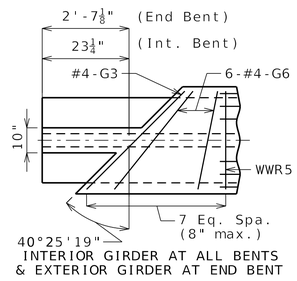

INTERIOR GIRDER AT ALL BENTS & EXTERIOR GIRDER AT END BENT

TOP FLANGE BLOCKOUT

Bill of Reinforcing Steel - Each Girder			
No.	Size/ Mark	Length	Shape
178	5 B1	5'-1"	11S
198	4 D1	4'-0"	9S
2	4 G3	5'-0"	20
2	4 G4	2'-3"	20
2	4 G5	3'-6"	20
12	4 G6	Varies	20

Bending Diagrams

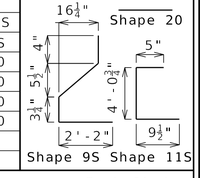

Welded Wire Reinforcement - Each Girder

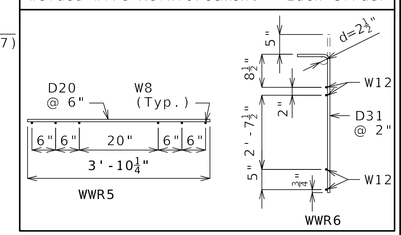

All dimensions are out to out.

Hooks and bends shall be in accordance with the CRSI Manual of Standard Practice for Detailing Reinforced Concrete Structures, Stirrup and Tie Dimensions.

Actual bar lengths are measured along centerline of bar to the nearest inch.

Minimum clearance to reinforcing shall be one inch.

All bar reinforcement shall be Grade 60.

The two D1 bars may be furnished as one bar at the fabricator's option.

All B1 bars shall be epoxy coated.

G4 and G5 not required for interior girders. Half no. of G3, G4, G5 and G6 not required for ext. girders of end spans.

General Notes:

Concrete for prestressed girders shall be Class A-1 with f'c = 8500 psi and f'ci = 6500 psi.

Use 14 strands, 0.6"Ø Grade 270, with an initial prestress force of 615 kips.

Pretensioned members shall be in accordance with Sec 1029.

Fabricator shall be responsible for location and design of lifting devices.

Exterior and interior girders are the same except: coil ties, top flange blockout, and application of bond breaker.

The contractor shall provide bracing necessary for lateral and torsional stability of the girders during construction of the concrete slab and remove the bracing after the slab has attained 75% design strength. Contractor shall not drill holes in the girders.

For Girder Camber Diagram, see Sheet No. 28.

For location of coil ties at concrete diaphragms and integral bents, see Sheets No. 19 and 26.

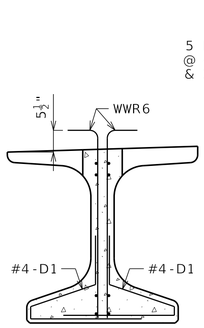

SECTION A-A

Strands not shown for clarity.

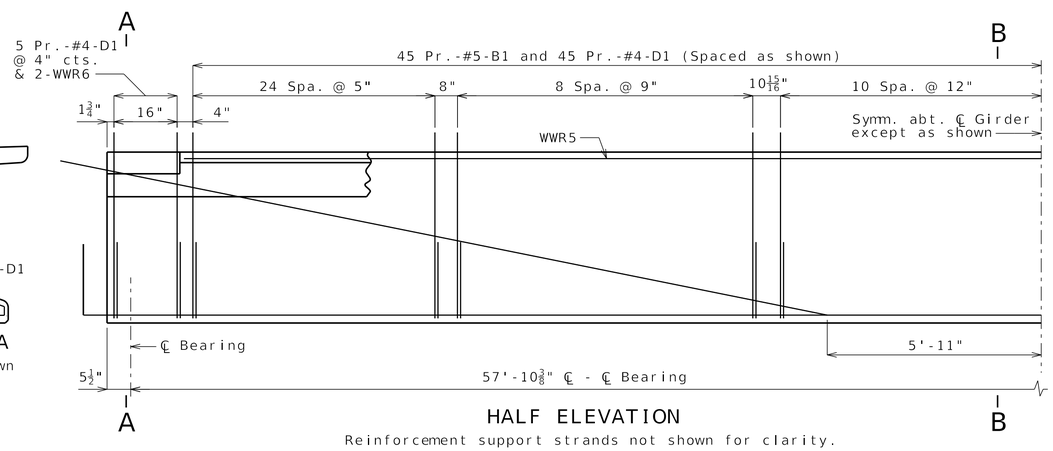

HALF ELEVATION

Reinforcement support strands not shown for clarity.

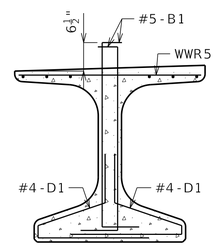

SECTION B-B

Strands not shown for clarity.

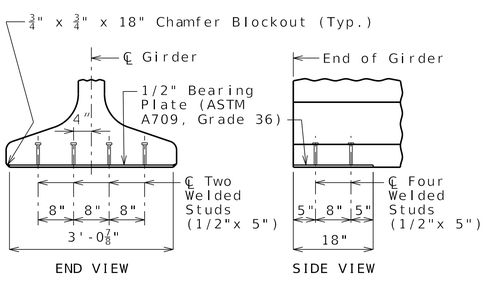

BEARING PLATE

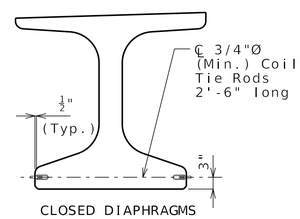

CLOSED DIAPHRAGMS AND INTEGRAL BENTS

COIL TIES

Exclude coil tie at exterior face of exterior girders except at integral end bents.

Detailed JUN 2025
Checked JUN 2025

Note: This drawing is not to scale. Follow dimensions.

NU-GIRDERS - SPAN (4-5)

STATE OF MISSOURI
DAVID MORANDEIRA
NUMBER PE-2021035906
PROFESSIONAL ENGINEER

THIS SHEET HAS BEEN SIGNED, SEALED AND DATED ELECTRONICALLY.

DATE PREPARED 6/9/2025

ROUTE	STATE
US-61	MO
DISTRICT	SHEET NO.
BR	A9682-25

COUNTY: ST. CHARLES
JOB NO.: JST0020
CONTRACT ID.:
PROJECT NO.:
BRIDGE NO.: A9682

DATE	DESCRIPTION

MISSOURI HIGHWAYS AND TRANSPORTATION COMMISSION
105 WEST CAPITOL
JEFFERSON CITY, MO 65102
1-888-ASK-MODOT (1-888-275-6636)

IMPROVE 70 ALLIANCE

HNTB
715 KIRK DRIVE
KANSAS CITY, MO 64105-1310
CERTIFICATE OF AUTHORITY NO. 001270

Bartlett & West
601 MONROE ST., SUITE 201 • JEFFERSON CITY, MO 65101
PHONE: 573-635-2627 • FAX: 573-635-2628
CERTIFICATE OF AUTHORITY NO. 000107 - ENGINEERING
WWW.BARTLETTWEST.COM

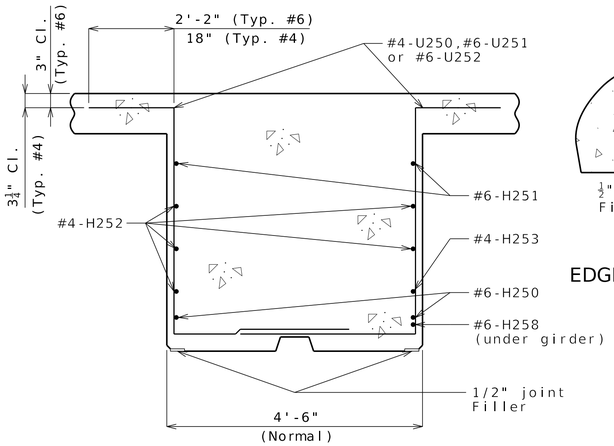

SECTION B-B

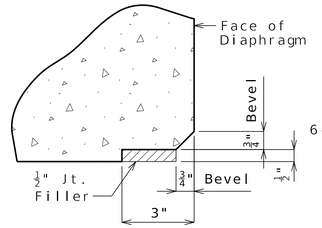

EDGE AND END DETAIL

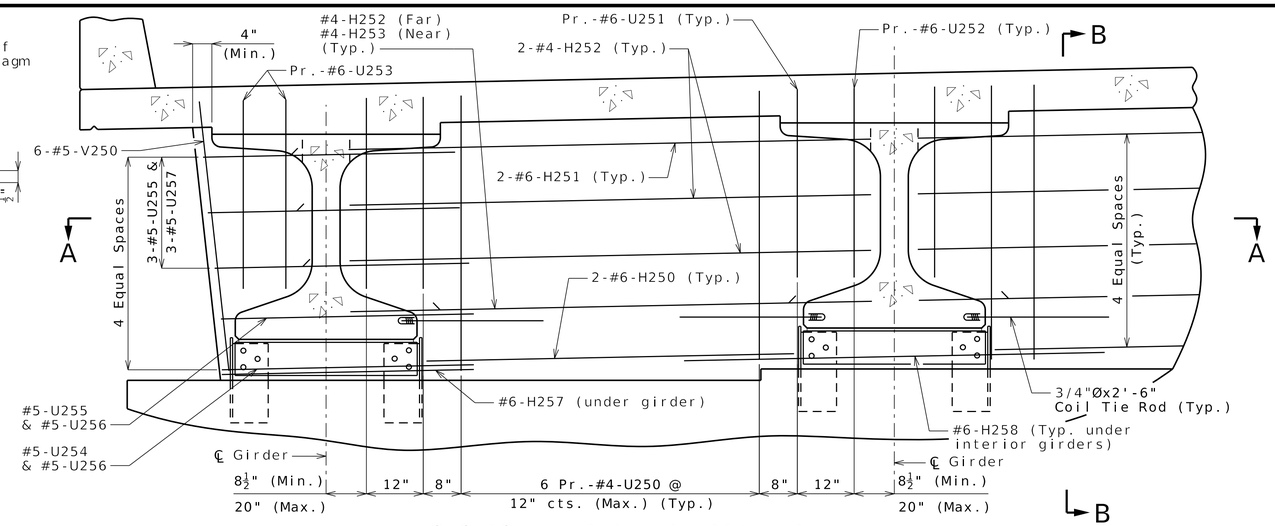

SECTION NEAR INTERMEDIATE BENT

(Looking Ahead Station)
(Int. Bent No.2 shown; Int. Bent No.4 similar.)

TABLE OF DIMENSIONS		
	Int. Bent No. 2	Int. Bent No. 4
DIM A	2'-6¼"	2'-3½"
DIM B	16⅝"	18⅜"
DIM C	12⅛"	9"

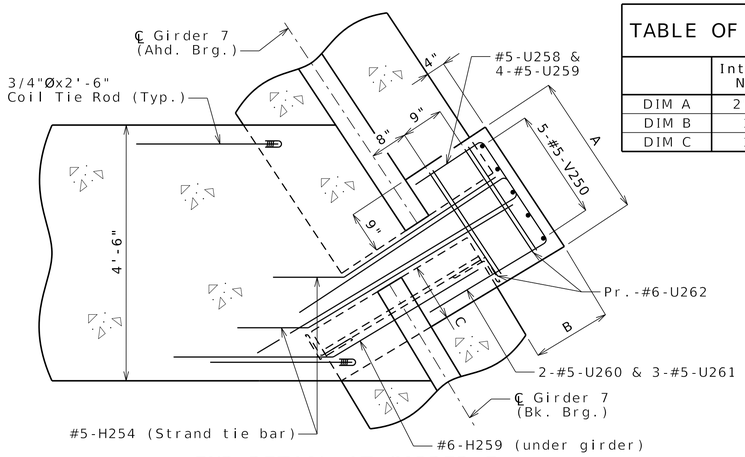

END DETAIL AT GIRDER 7

(Int. Bent No.2 shown, Int. Bent No.4 similar.)

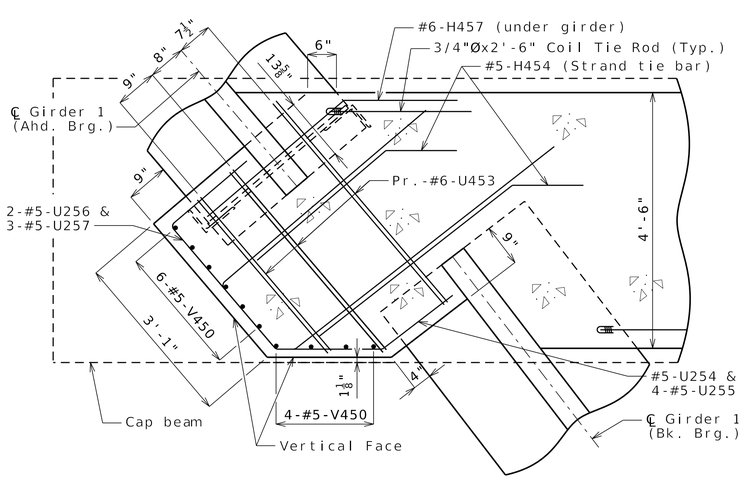

INT. BENT NO. 4 END DETAIL AT GIRDER 1

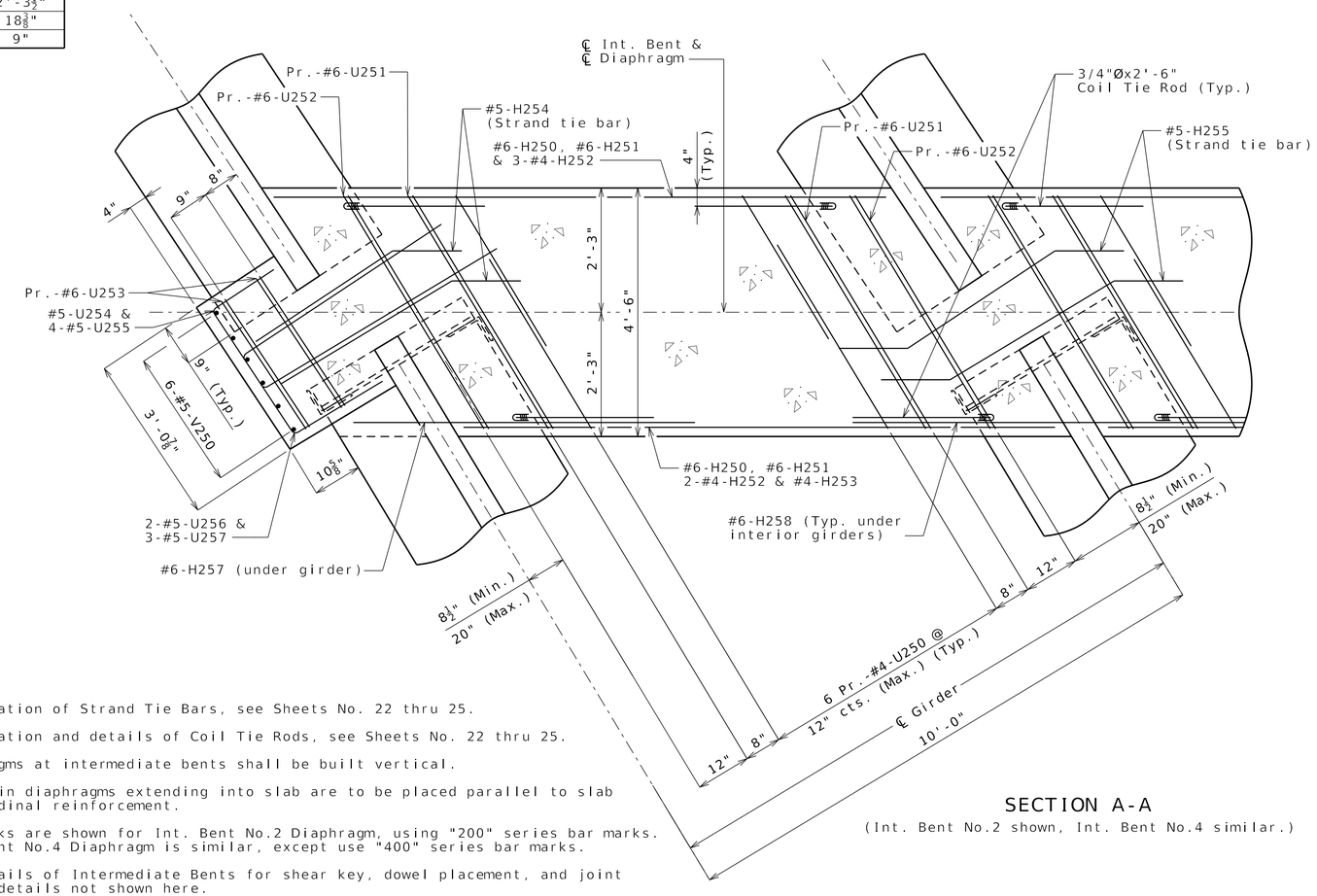

SECTION A-A

(Int. Bent No.2 shown, Int. Bent No.4 similar.)

Notes:

For location of Strand Tie Bars, see Sheets No. 22 thru 25.

For location and details of Coil Tie Rods, see Sheets No. 22 thru 25.

Diaphragms at intermediate bents shall be built vertical.

U-bars in diaphragms extending into slab are to be placed parallel to slab longitudinal reinforcement.

Bar marks are shown for Int. Bent No.2 Diaphragm, using "200" series bar marks. Int. Bent No.4 Diaphragm is similar, except use "400" series bar marks.

See Details of Intermediate Bents for shear key, dowel placement, and joint filler details not shown here.

CONCRETE DIAPHRAGM AT INTERMEDIATE BENTS NO. 2 & 4

Detailed JUN 2025
Checked JUN 2025

Note: This drawing is not to scale. Follow dimensions.

STATE OF MISSOURI
DAVID MORANDEIRA
NUMBER PE-2021035906
PROFESSIONAL ENGINEER

THIS SHEET HAS BEEN SIGNED, SEALED AND DATED ELECTRONICALLY.

DATE PREPARED	6/9/2025
ROUTE	US-61
STATE	MO
DISTRICT	BR
SHEET NO.	A9682-26
COUNTY	ST. CHARLES
JOB NO.	JST0020
CONTRACT ID.	
PROJECT NO.	
BRIDGE NO.	A9682

DESCRIPTION | DATE

MISSOURI HIGHWAYS AND TRANSPORTATION COMMISSION
105 WEST CAPITOL
JEFFERSON CITY, MO 65102
1-888-ASK-MODOT (1-888-275-6636)

HNTB
715 KIRK DRIVE
KANSAS CITY, MO 64105-1310
CERTIFICATE OF AUTHORITY NO. 001270

Bartlett & West
601 MONROE ST., SUITE 201 - JEFFERSON CITY, MO 65101
(573) 634-2448 FAX (573) 634-8693
CERTIFICATE OF AUTHORITY NO. 000107 - ENGINEERING
WWW.BARTLETTWEST.COM

06/10/2025
Released for Construction

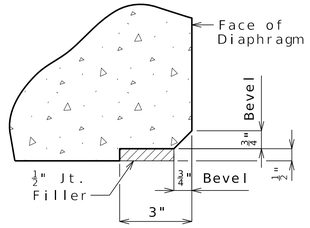

EDGE AND END DETAIL

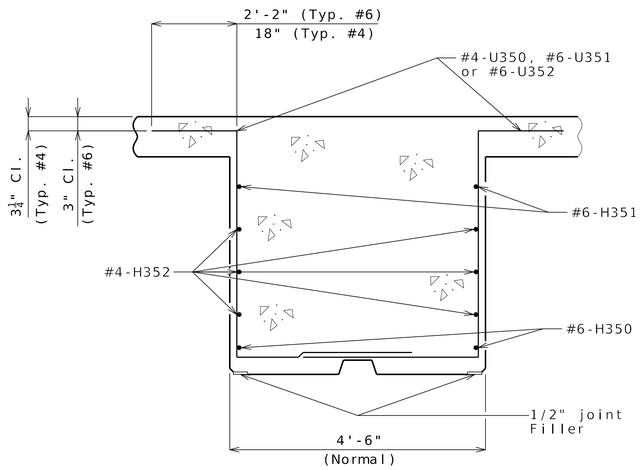

SECTION B-B

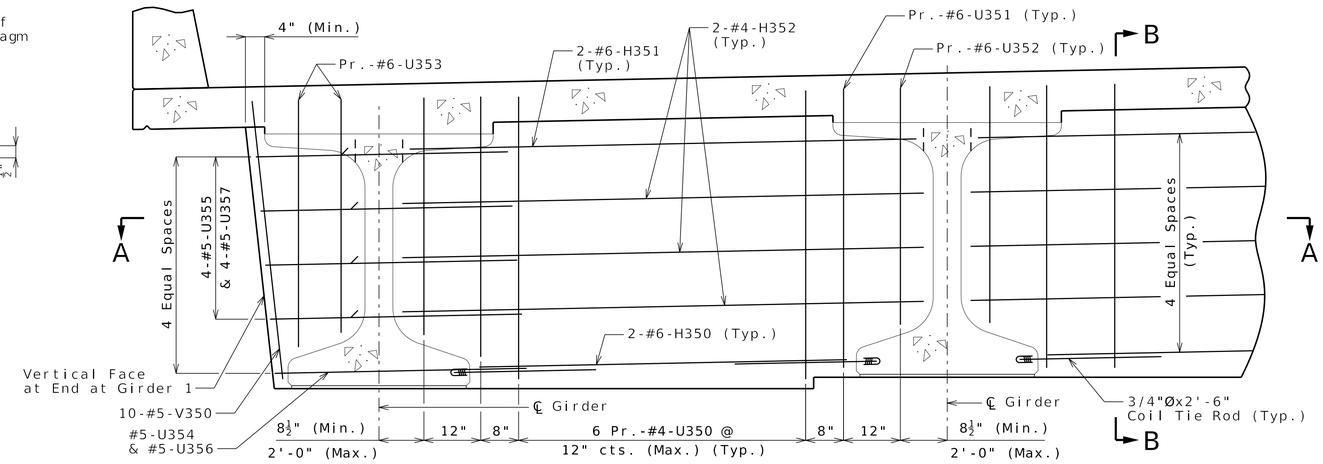

SECTION NEAR INTERMEDIATE BENT
(Looking Ahead station)

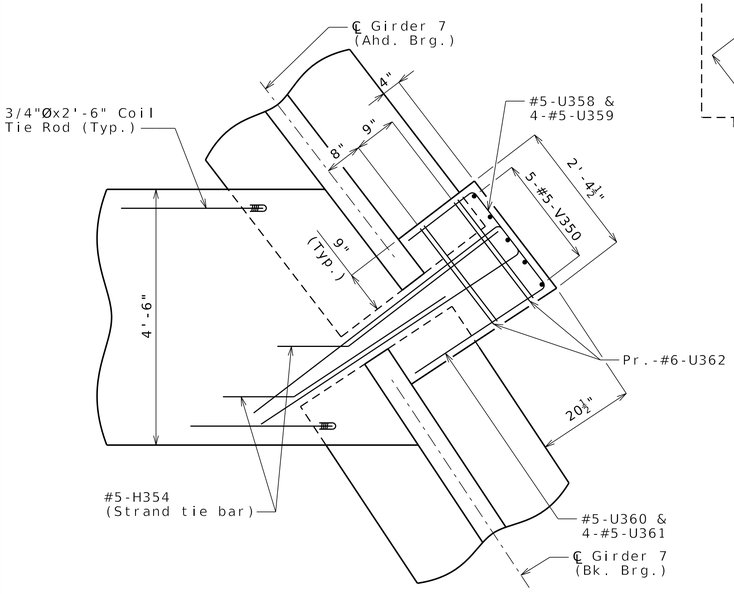

END DETAIL AT GIRDER 7

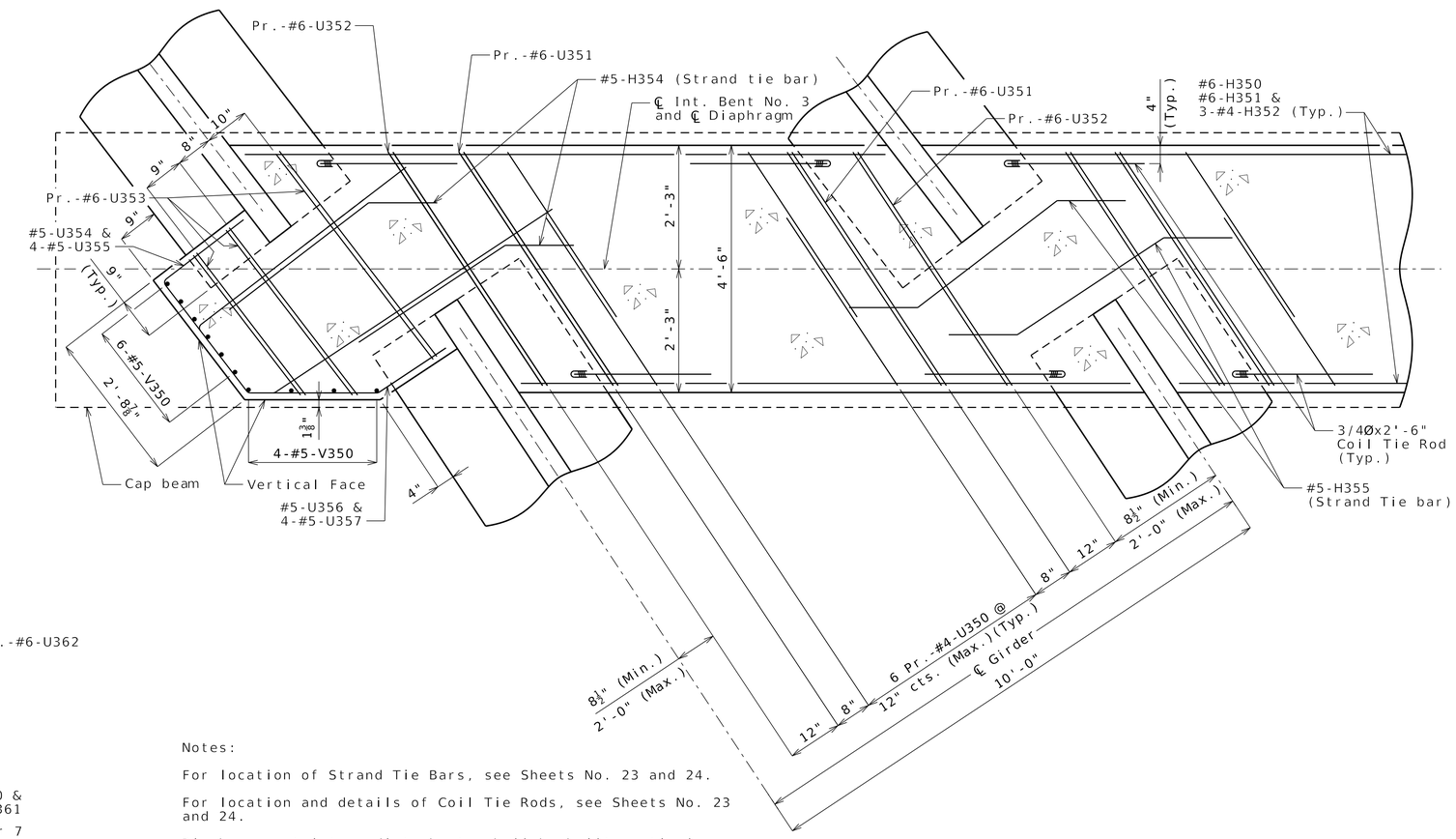

SECTION A-A

Notes:

For location of Strand Tie Bars, see Sheets No. 23 and 24.

For location and details of Coil Tie Rods, see Sheets No. 23 and 24.

Diaphragms at intermediate bents shall be built vertical.

U-bars in diaphragms extending into slab are to be placed parallel to slab longitudinal reinforcement.

See Details of Intermediate Bents for shear key, dowel placement, and joint filler details not shown here.

Detailed JUN 2025
Checked JUN 2025

Note: This drawing is not to scale. Follow dimensions.

CONCRETE DIAPHRAGM AT INTERMEDIATE BENT NO. 3

STATE OF MISSOURI
DAVID MORANDEIRA
NUMBER
PE-2021035906
PROFESSIONAL ENGINEER

THIS SHEET HAS BEEN SIGNED, SEALED AND DATED ELECTRONICALLY.

DATE PREPARED	
6/9/2025	
ROUTE	STATE
US-61	MO
DISTRICT	SHEET NO.
BR	A9682-27
COUNTY	
ST. CHARLES	
JOB NO.	
JST0020	
CONTRACT ID.	
PROJECT NO.	
BRIDGE NO.	
A9682	

DESCRIPTION	DATE

MISSOURI HIGHWAYS AND TRANSPORTATION COMMISSION
105 WEST CAPITOL
JEFFERSON CITY, MO 65102
1-888-ASK-MODOT (1-888-275-6636)

IMPROVE 70 ALLIANCE

HNTB
715 KIRK DRIVE
KANSAS CITY, MO 64105-1310
CERTIFICATE OF AUTHORITY
NO. 001270

Bartlett & West
601 MONROE ST., SUITE 201 - JEFFERSON CITY, MO 65101
PHONE: 573-634-2022 FAX: 573-634-2026
CERTIFICATE OF AUTHORITY NO. 000117 - ENGINEERING
WWW.BARTLETTWEST.COM

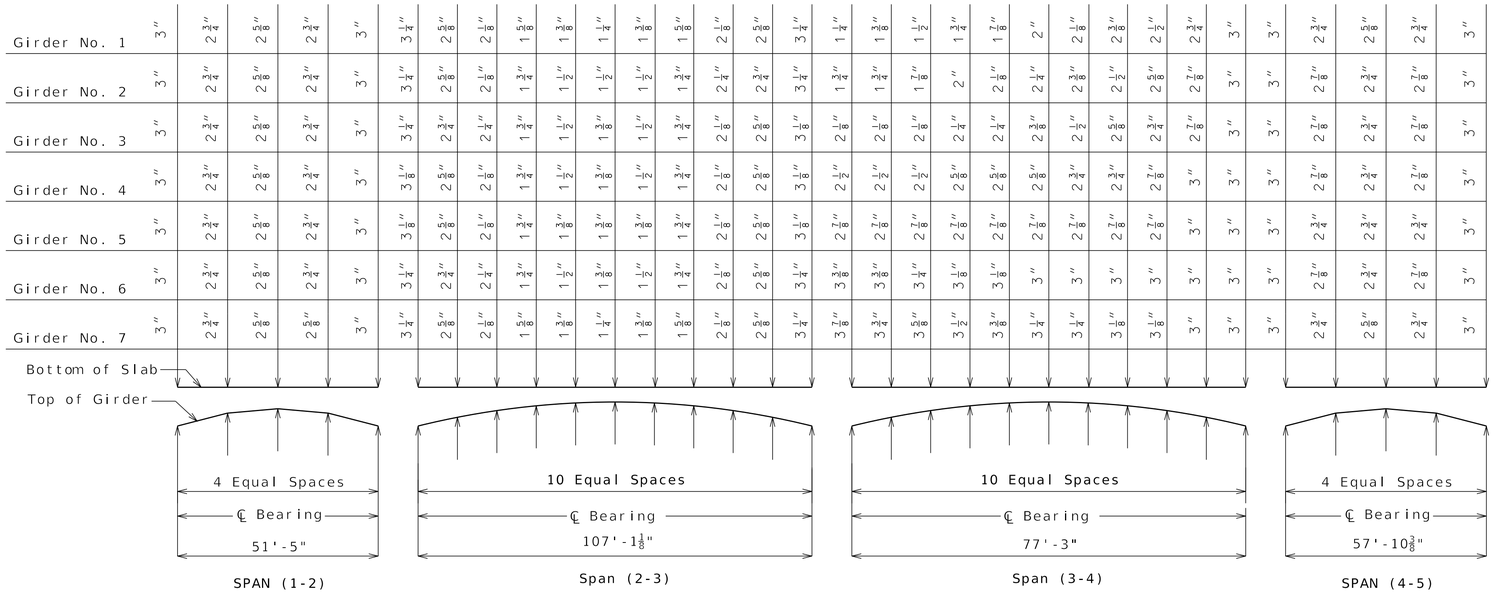

THEORETICAL SLAB HAUNCHING DIAGRAM (ESTIMATED AT 90 DAYS)

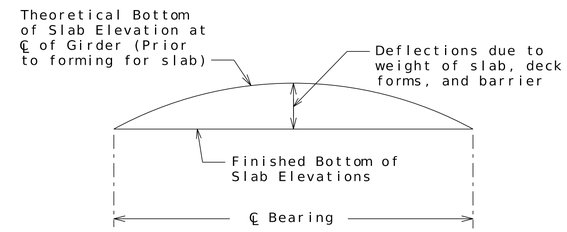

TYPICAL SLAB ELEVATIONS DIAGRAM

Theoretical Bottom of Slab Elevations at Centerline of Girder (Prior to forming for slab) (Estimated at 90 days)

Girder Number	Span (1-2) (51-5" ℄ Brg. - ℄ Brg.)				
	℄ Brg.	.25	.50	.75	℄ Brg.
1	633.92	633.82	633.71	633.59	633.47
2	634.56	634.47	634.36	634.25	634.12
3	635.21	635.11	635.01	634.90	634.78
4	635.85	635.76	635.66	635.55	635.43
5	636.49	636.40	636.31	636.20	636.09
6	637.13	637.05	636.95	636.85	636.74
7	637.77	637.69	637.60	637.50	637.39

Girder Number	Span (2-3) (107-1 1/8" ℄ Brg. - ℄ Brg.)										
	℄ Brg.	.10	.20	.30	.40	.50	.60	.70	.80	.90	℄ Brg.
1	633.40	633.32	633.24	633.13	633.02	632.88	632.73	632.55	632.36	632.16	631.95
2	634.08	634.01	633.93	633.84	633.72	633.59	633.44	633.27	633.07	632.87	632.65
3	634.75	634.69	634.61	634.52	634.41	634.28	634.13	633.96	633.77	633.57	633.36
4	635.42	635.36	635.29	635.20	635.09	634.97	634.82	634.65	634.47	634.27	634.06
5	636.09	636.03	635.96	635.88	635.77	635.65	635.50	635.34	635.16	634.96	634.76
6	636.76	636.70	636.63	636.55	636.45	636.33	636.19	636.03	635.85	635.65	635.45
7	637.43	637.37	637.30	637.22	637.12	637.00	636.86	636.70	636.53	636.34	636.14

Girder Number	Span (3-4) (77-3" ℄ Brg. - ℄ Brg.)										
	℄ Brg.	.10	.20	.30	.40	.50	.60	.70	.80	.90	℄ Brg.
1	631.78	631.65	631.51	631.36	631.22	631.06	630.90	630.73	630.56	630.38	630.20
2	632.52	632.39	632.26	632.12	631.97	631.82	631.66	631.50	631.33	631.15	630.97
3	633.27	633.14	633.00	632.87	632.72	632.57	632.42	632.26	632.09	631.92	631.74
4	634.00	633.88	633.75	633.61	633.47	633.33	633.17	633.01	632.85	632.68	632.50
5	634.74	634.61	634.49	634.35	634.22	634.07	633.92	633.76	633.60	633.44	633.26
6	635.47	635.35	635.22	635.09	634.96	634.82	634.67	634.51	634.35	634.19	634.02
7	636.20	636.08	635.95	635.83	635.69	635.56	635.41	635.26	635.10	634.94	634.77

Girder Number	Span (4-5) (57-10 3/8" ℄ Brg. - ℄ Brg.)				
	℄ Brg.	.25	.50	.75	℄ Brg.
1	630.03	629.69	629.33	628.95	628.55
2	630.84	630.51	630.16	629.78	629.39
3	631.64	631.32	630.97	630.60	630.21
4	632.44	632.12	631.78	631.42	631.04
5	633.23	632.92	632.58	632.23	631.85
6	634.02	633.71	633.38	633.03	632.66
7	634.81	634.50	634.17	633.83	633.47

Elevations are based on a constant slab thickness of 8 1/2" and include allowance for theoretical dead load deflections due to weight of slab (including deck forms and barrier).

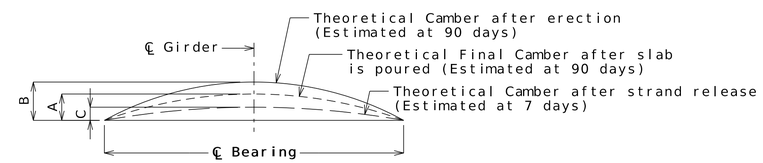

Girder	Span (1-2)		
	A	B	C
Exterior	1/2"	5/8"	3/8"
Interior			

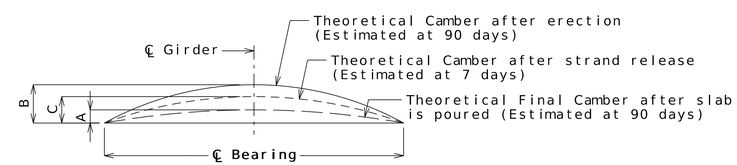

Girder	Span (2-3)			Span (3-4)			Span (4-5)		
	A	B	C	A	B	C	A	B	C
Girder No. 1	2 1/2"	4 1/2"	2 7/8"	3/8"	1"	5/8"	1/2"	3/4"	1/2"
Interior	2 1/4"						3/8"		
Girder No. 7	2 3/8"						1/2"		

GIRDER CAMBER DIAGRAM

Conversion Factors for Girder Camber (Estimated at 90 days):

0.1 pt. = 0.314 x 0.5 pt.
0.2 pt. = 0.593 x 0.5 pt.
0.3 pt. = 0.813 x 0.5 pt.
0.4 pt. = 0.952 x 0.5 pt.

0.25 pt. = 0.7125 x 0.5 pt.

If girder camber is different from that shown in the camber diagram, in order to maintain minimum slab thickness, an adjustment of the slab haunches, an increase in slab thickness or a raise in grade uniformly throughout the structure shall be necessary. The haunch shall be limited to ensure the projecting girder reinforcement or hairpin bar is embedded into the slab at least 2 inches.

Detailed JUN 2025
Checked JUN 2025

THEORETICAL SLAB HAUNCHING DIAGRAM, BOTTOM OF SLAB ELEVATIONS, AND GIRDER CAMBER DIAGRAM

Note: This drawing is not to scale. Follow dimensions.

DATE PREPARED 6/9/2025

ROUTE	STATE
US-61	MO
DISTRICT	SHEET NO.
BR	A9682-28

COUNTY: ST. CHARLES
JOB NO.: JST0020
CONTRACT ID.:
PROJECT NO.:
BRIDGE NO.: A9682

DESCRIPTION | DATE

MISSOURI HIGHWAYS AND TRANSPORTATION COMMISSION
105 WEST CAPITOL
JEFFERSON CITY, MO 65102
1-888-ASK-MODOT (1-888-275-6636)
MoDOT
IMPROVE 70 ALLIANCE
715 KIRK DRIVE
KANSAS CITY, MO 64105-1310
CERTIFICATE OF AUTHORITY NO. 001270
HNTB
Bartlett & West
601 MONROE ST., SUITE 201 - JEFFERSON CITY, MO 65101
PHONE: (573) 634-2448 FAX: (573) 634-8693
CERTIFICATE OF AUTHORITY NO. 000167 - ENGINEERING
WWW.BARTLETTWEST.COM

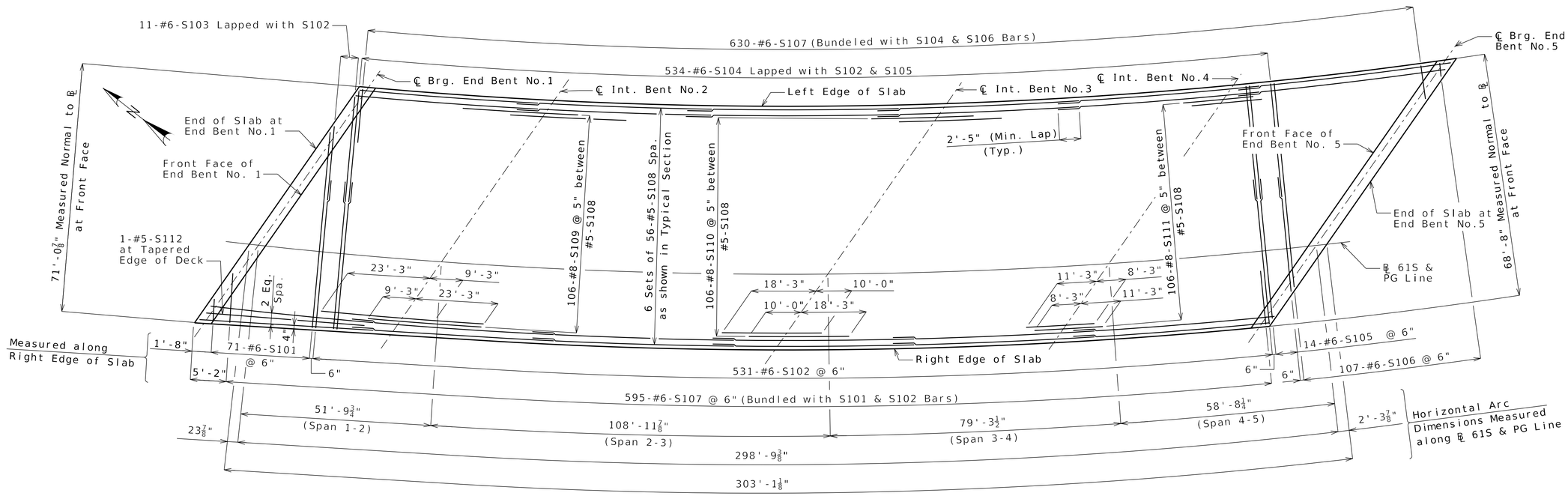

TOP REINFORCING PLAN

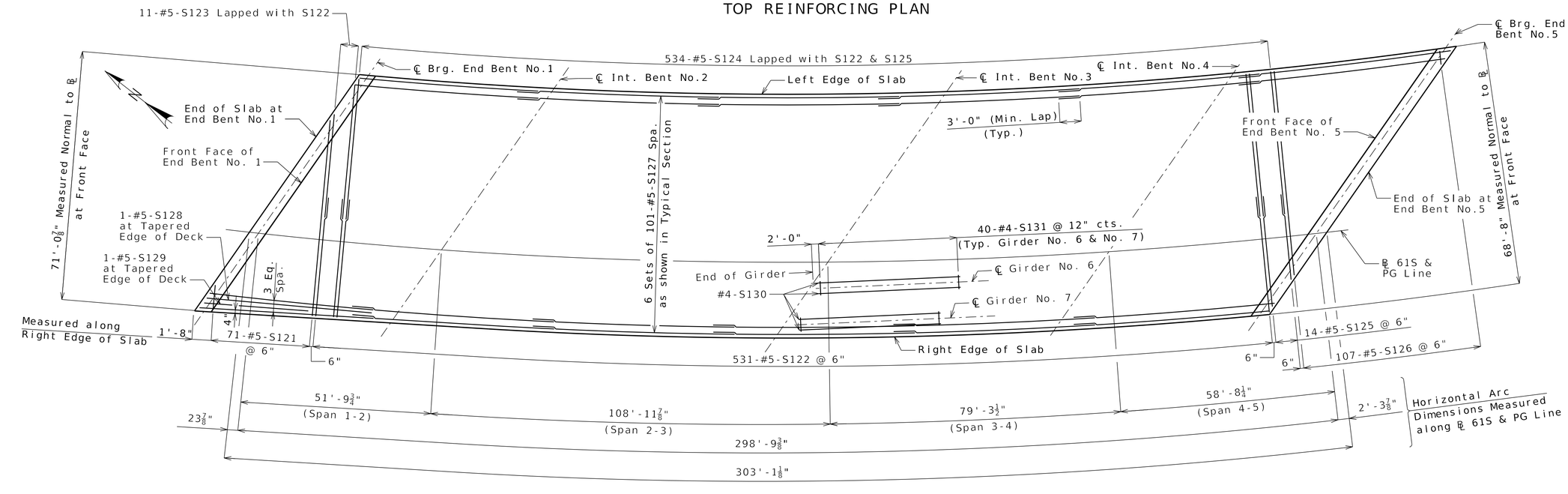

BOTTOM REINFORCING PLAN

Notes:

Longitudinal slab dimensions are measured horizontally.

For Section Thru Slab and Slab Pouring Sequence, see Sheet No. 30.

For Details and Reinforcement of Barrier Curb not shown, see Sheet No. 32.

For Theoretical Slab Haunching Diagram, see Sheet No. 28.

For Theoretical Bottom of Slab Elevations, see Sheet No. 28.

For Haunch Reinforcing Detail, see Sheet No. 30.

PLAN OF SLAB SHOWING REINFORCEMENT

Detailed JUN 2025
Checked JUN 2025

Note: This drawing is not to scale. Follow dimensions.

STATE OF MISSOURI
DAVID MORANDEIRA
NUMBER PE-2021035906
PROFESSIONAL ENGINEER

THIS SHEET HAS BEEN SIGNED, SEALED AND DATED ELECTRONICALLY.

DATE PREPARED	
6/9/2025	
ROUTE	STATE
US-61	MO
DISTRICT	SHEET NO.
BR	A9682-29
COUNTY	
ST. CHARLES	
JOB NO.	
JST0020	
CONTRACT ID.	
PROJECT NO.	
BRIDGE NO.	
A9682	

DATE	DESCRIPTION

MISSOURI HIGHWAYS AND TRANSPORTATION COMMISSION
105 WEST CAPITOL
JEFFERSON CITY, MO 65102
1-888-ASK-MODOT (1-888-275-6636)

HNTB
715 KIRK DRIVE
KANSAS CITY, MO 64105-1310
CERTIFICATE OF AUTHORITY
NO. 001270

Bartlett & West
601 MONROE ST., SUITE 201 - JEFFERSON CITY, MO 65101
PHONE: (573) 634-2448 FAX: (573) 634-8693
CERTIFICATE OF AUTHORITY NO. E00107 - ENGINEERING
PHONE: (417) 831-7777 FAX: (417) 831-7780

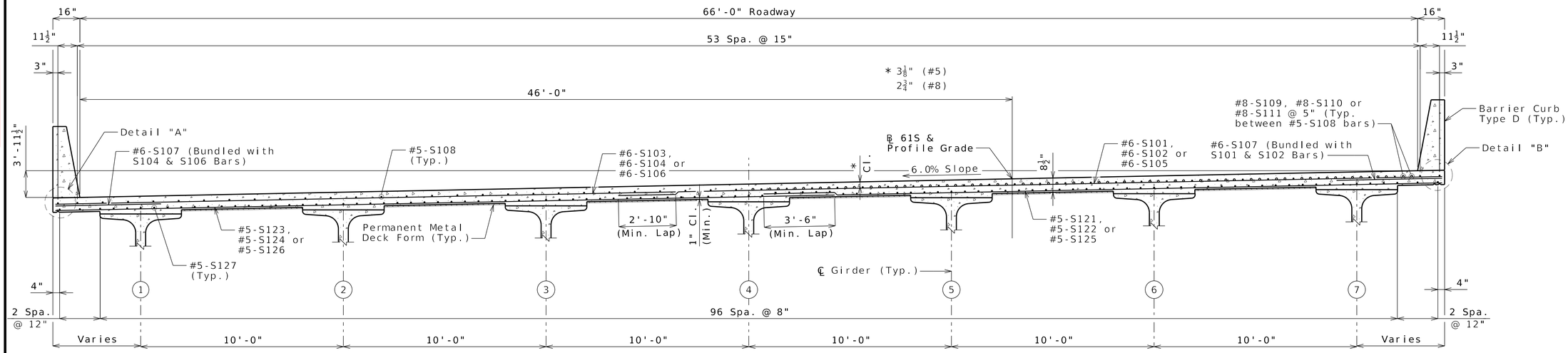

HALF SECTION NEAR MIDSPAN

HALF SECTION NEAR INTERMEDIATE BENT

TYPICAL SECTION THRU SLAB

(Shown Normal to ℄ Ramp)
Slab Width varies in Span (1-2) and (2-3). Span (3-4) and (4-5) shown.

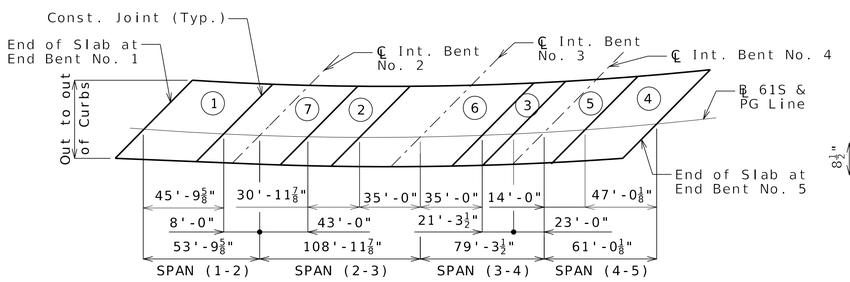

	Sequence of Pours							Min. Rate of Pour Cu. Yds./Hr.
	Direction							With Retarder
Basic Sequence	1	2	3	4	5	6	7	25
	Either Direction							
Alternate pours to the basic skip sequence are subject to the approval of the engineer in accordance with Sec 703.								
Alternate A Pours	1	7 + 2	6 + 3	5 + 4				58
	7 to End	6 to 1	5 to 2	End to 3				
Alternate B Pours	1 + 7 + 2	6 + 3	5 + 4					58
	6 to End	5 to 2	End to 3					
Alternate C Pours	1 + 7 + 2	6 + 3 + 5 + 4						58
	6 to End	End to 2						
Alternate D Pours	4 + 5 + 3 + 6 + 2 + 7 + 1							58
	End to End (Upgrade)							

The contractor shall furnish an approved retarder to retard the set of the concrete to 2.5 hours, and shall pour and satisfactorily finish the slab pours at the rate given.

Bridge deck must be poured upgrade.

The concrete diaphragm at the intermediate bents and integral end bents shall be poured a minimum of 30 minutes and a maximum of 2 hours before the slab is poured.

SLAB POURING SEQUENCE

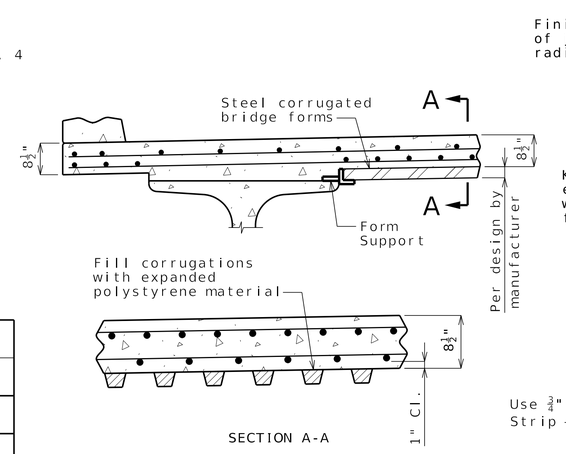

SECTION A-A

STAY-IN-PLACE FORM DETAILS

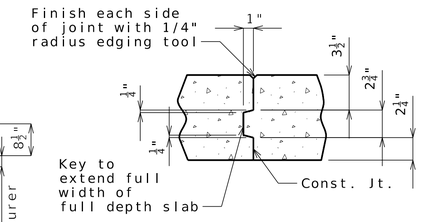

FULL DEPTH SLAB

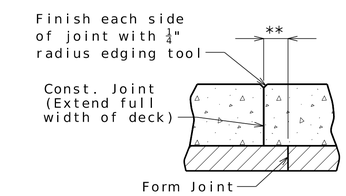

** Adjust the construction joint to a clearance of 6 inches minimum from the panel joint.

SLAB ON FORM

SLAB CONSTRUCTION JOINT

HAUNCH REINFORCING DETAIL

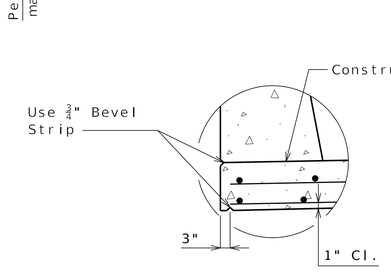

DETAIL "A"

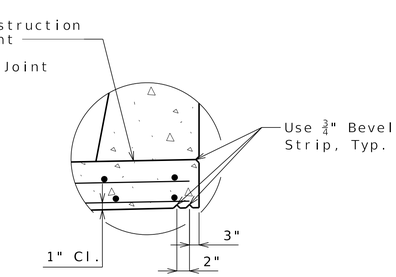

DETAIL "B"

Notes:

Barrier Curb reinforcement not shown for clarity.

For Plan of Slab Showing Reinforcement and additional notes, see Sheet No. 29.

For metal deck form notes, see General Notes.

Contractor may shift bars as necessary to tie in barrier bars.

SLAB DETAILS

STATE OF MISSOURI
DAVID MORANDEIRA NUMBER PE-2021035906
PROFESSIONAL ENGINEER

THIS SHEET HAS BEEN SIGNED, SEALED AND DATED ELECTRONICALLY.

DATE PREPARED	
6/9/2025	
ROUTE	STATE
US-61	MO
DISTRICT	SHEET NO.
BR	A9682-30
COUNTY	
ST. CHARLES	
JOB NO.	
JST0020	
CONTRACT ID.	
PROJECT NO.	
BRIDGE NO.	
A9682	

DESCRIPTION

DATE

MISSOURI HIGHWAYS AND TRANSPORTATION COMMISSION
105 WEST CAPITOL
JEFFERSON CITY, MO 65102
1-888-ASK-MODOT (1-888-275-6636)

IMPROVE 70 ALLIANCE

HNTB
715 KIRK DRIVE
KANSAS CITY, MO 64105-1310
CERTIFICATE OF AUTHORITY NO. 001270

Bartlett & West
601 MONROE ST., SUITE 201 - JEFFERSON CITY, MO 65101
(573) 634-2448 FAX (573) 634-8693
CERTIFICATE OF AUTHORITY NO. 000107 - ENGINEERING
WWW.BARTLETTWEST.COM

Detailed JUN 2025
Checked JUN 2025

Note: This drawing is not to scale. Follow dimensions.

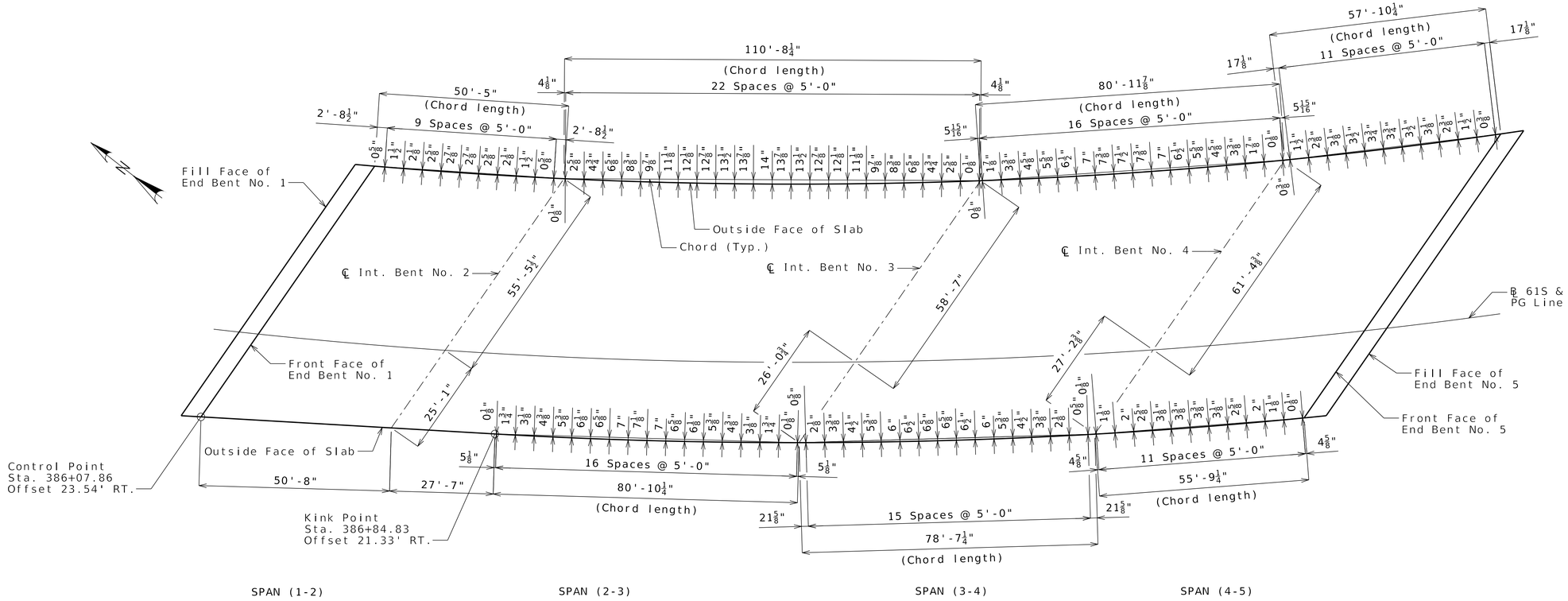

PLAN

All dimensions are horizontal.
All bents are parallel

Detailed JUN 2025
Checked JUN 2025

Note: This drawing is not to scale. Follow dimensions.

SLAB CURVE ORDINATES

STATE OF MISSOURI
DAVID MORANDEIRA
NUMBER
PE-2021035906
PROFESSIONAL ENGINEER

THIS SHEET HAS BEEN SIGNED, SEALED AND DATED ELECTRONICALLY.

DATE PREPARED	
6/9/2025	
ROUTE	STATE
US-61	MO
DISTRICT	SHEET NO.
BR	A9682-31
COUNTY	
ST. CHARLES	
JOB NO.	
JST0020	
CONTRACT ID.	
PROJECT NO.	
BRIDGE NO.	
A9682	

DATE	DESCRIPTION

MISSOURI HIGHWAYS AND TRANSPORTATION COMMISSION
105 WEST CAPITOL
JEFFERSON CITY, MO 65102
1-888-ASK-MODOT (1-888-275-6636)

IMPROVE 70 ALLIANCE

HNTB
715 KIRK DRIVE
KANSAS CITY, MO 64105-1310
CERTIFICATE OF AUTHORITY
NO. 001270

Bartlett & West
601 MONROE ST., SUITE 201 - JEFFERSON CITY, MO 65101
PHONE: (573) 634-2022
CERTIFICATE OF AUTHORITY NO. 000107 - ENGINEERING
WWW.BARTLETTWEST.COM

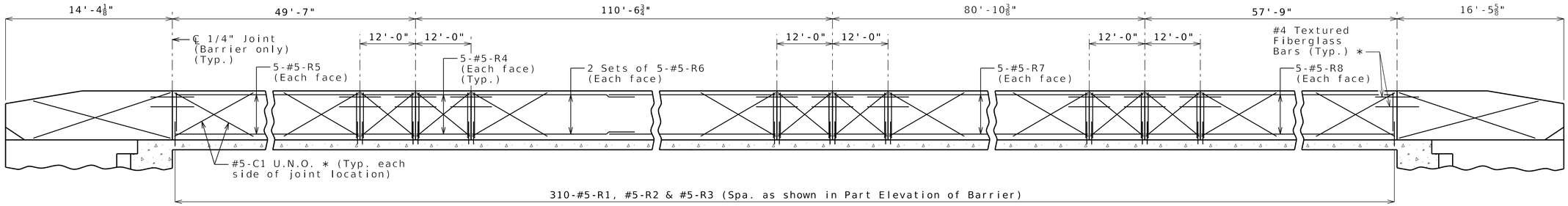

ELEVATION OF LEFT BARRIER

Longitudinal dimensions are horizontal arc dimensions (except at end bents) and measured along edge of slab.

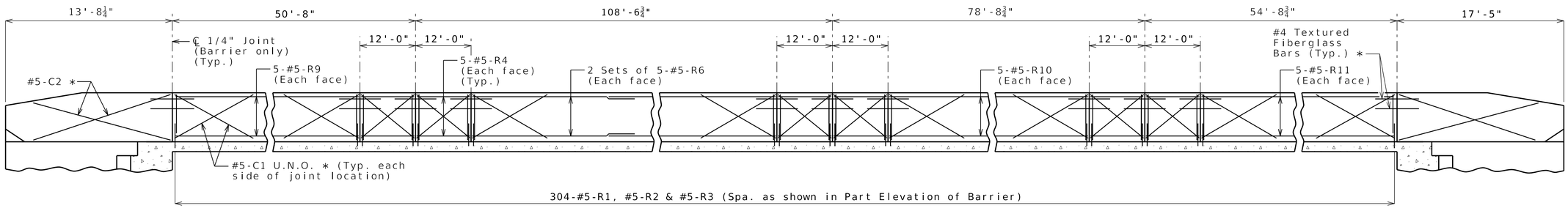

ELEVATION OF RIGHT BARRIER

Longitudinal dimensions are horizontal arc dimensions (except at end bents and tangent edge of slab in Spans 1-2 and 2-3)and measured along edge of slab.

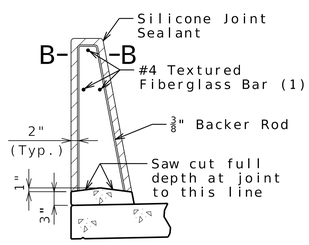

SECTION THRU SAW CUT JOINT

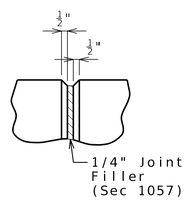

PART ELEVATION AT FORMED JOINT

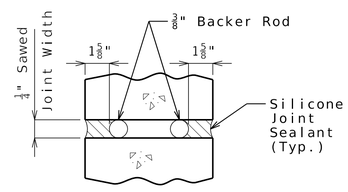

SECTION B-B

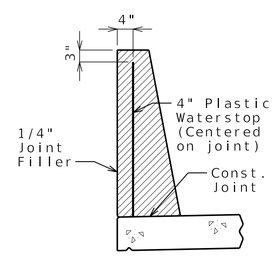

WATERSTOP DETAIL

Plastic waterstop shall be placed in all formed joints, except structures with superelevation, use on lower joints only.

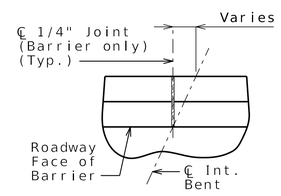

PART PLAN SHOWING JOINT LOCATION

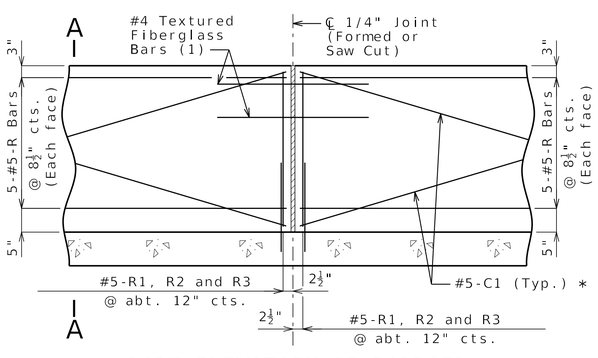

PART ELEVATION OF BARRIER

(1) Four feet long, centered on joint, slip-formed option only

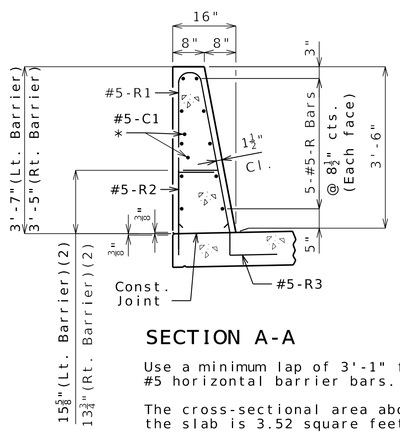

SECTION A-A

Use a minimum lap of 3'-1" for #5 horizontal barrier bars.

The cross-sectional area above the slab is 3.52 square feet.

(2) To top of bar

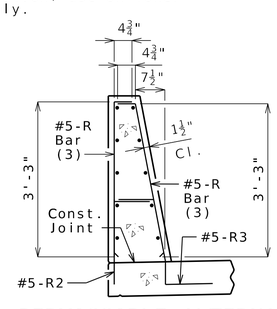

R-BAR PERMISSIBLE ALTERNATE SHAPE

(3) The R1 bar may be separated into two bars as shown, at the contractor's option, only when slip forming is not used. (All dimensions are out to out.)

General Notes:

* Slip-formed option only.

Conventional forming or slip forming may be used. Saw cut joints may be used with conventional forming.

Top of barrier shall be built parallel to grade and barrier joints (except at end bents) normal to grade.

All exposed edges of barrier shall have either a 1/2-inch radius or a 3/8-inch bevel, unless otherwise noted.

Concrete in barrier shall be Class B-1.

Concrete traffic barrier delineators shall be placed on top of the barrier as shown on Missouri Standard Plan 617.10 and in accordance with Sec 617.

Joint sealant and backer rods shall be in accordance with Sec 717 for silicone joint sealant for saw cut and formed joints.

For slip-formed option, both sides of barrier shall have a vertically broomed finish and the top shall have a transversely broomed finish.

Plastic waterstop shall not be used with saw cut joints.

TYPE D BARRIER

Detailed JUN 2025
Checked JUN 2025

Note: This drawing is not to scale. Follow dimensions.

STATE OF MISSOURI
DAVID MORANDEIRA NUMBER PE-2021035906
PROFESSIONAL ENGINEER

THIS SHEET HAS BEEN SIGNED, SEALED AND DATED ELECTRONICALLY.

DATE PREPARED	
6/9/2025	
ROUTE	STATE
US-61	MO
DISTRICT	SHEET NO.
BR	A9682-32
COUNTY	
ST. CHARLES	
JOB NO.	
JST0020	
CONTRACT ID.	
PROJECT NO.	
BRIDGE NO.	
A9682	

DESCRIPTION

DATE

MISSOURI HIGHWAYS AND TRANSPORTATION COMMISSION
105 WEST CAPITOL
JEFFERSON CITY, MO 65102
1-888-ASK-MODOT (1-888-275-6636)
MoDOT
IMPROVE 70 ALLIANCE
HNTB
715 KIRK DRIVE
KANSAS CITY, MO 64105-1310
CERTIFICATE OF AUTHORITY NO. 001270
Bartlett & West
601 MONROE ST., SUITE 201 - JEFFERSON CITY, MO 65101
PHONE: 573-634-2022 - FAX: 573-634-2026
CERTIFICATE OF AUTHORITY NO. 000757 - ENGINEERING
WWW.BARTLETTWEST.COM

06/10/2025
Released for Construction

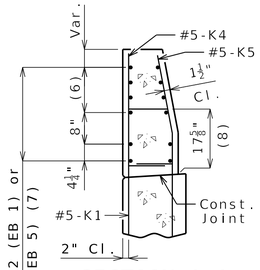

SECTION A-A

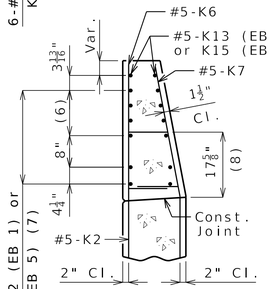

SECTION B-B

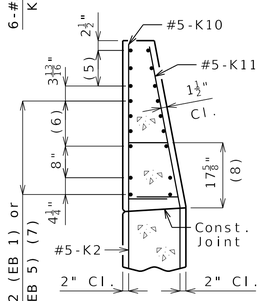

SECTION C-C

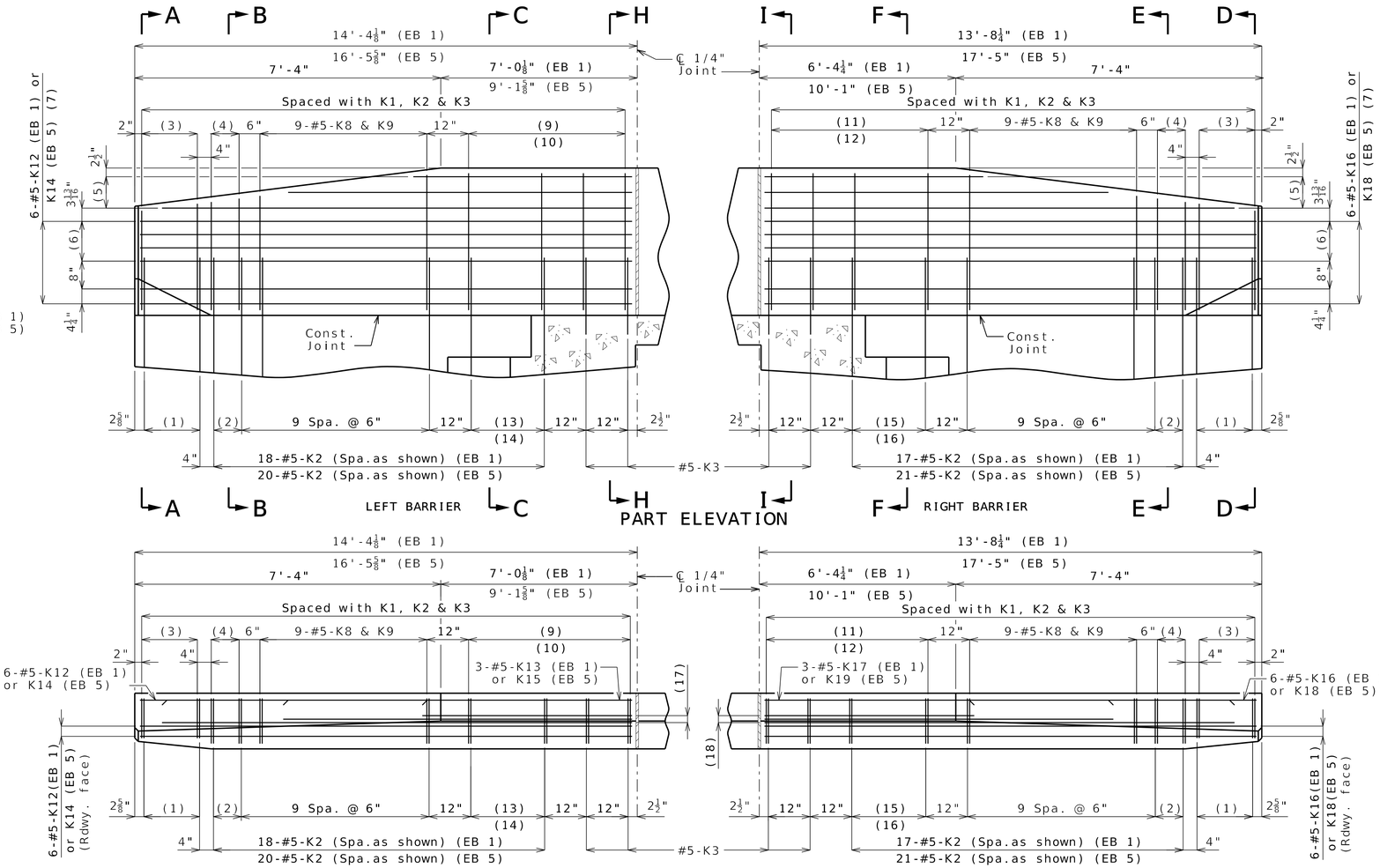

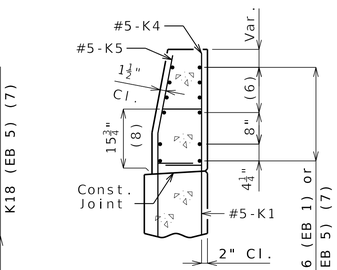

SECTION D-D

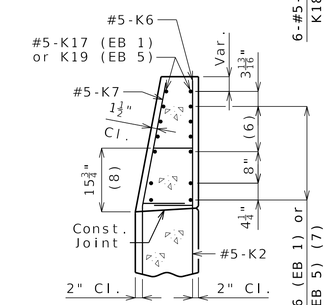

SECTION E-E

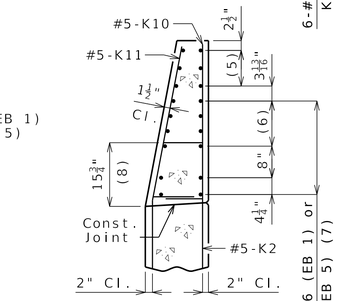

SECTION F-F

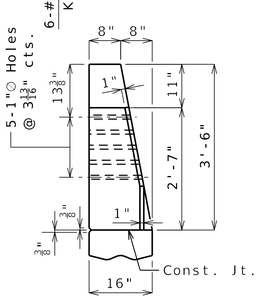

ELEVATION G-G

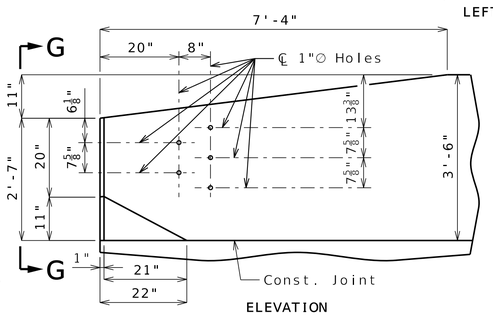

ELEVATION

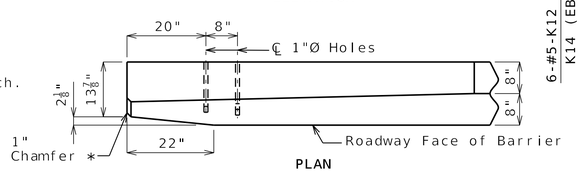

PLAN

DETAILS OF GUARD RAIL ATTACHMENT

* Transition to zero at Type A curb for gutter lines to match.

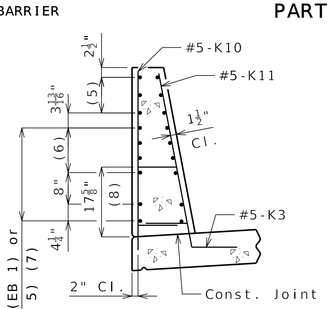

SECTION H-H

(1) 5-#5-K1 @ 4" cts.
(2) 2 spaces @ 4"
(3) 5-#5-K4 & K5
(4) 3-#5-K6 & K7
(5) 3-#5-K13, K15, K17 or K19 @ 4½" cts., each face
(6) 3 spaces @ 3 13/16"
(7) Spaced as shown, each face
(8) To top of bar, measured along back face
(9) 8-#5-K10 & K11 (EB 1)
(10) 10-#5-K10 & K11 (EB 5)
(11) 7-#5-K10 & K11 (EB 1)
(12) 11-#5-K10 & K11 (EB 5)
(13) 5 Spaces @ abt. 12" (EB 1)
(14) 7 Spaces @ abt. 12" (EB 5)
(15) 4 Spaces @ abt. 12" (EB 1)
(16) 8 Spaces @ abt. 12" (EB 5)
(17) 3-#5-K13 (EB 1) or K15 (EB 5) (Roadway Face)
(18) 3-#5-K17 (EB 1) or K19 (EB 5) (Roadway Face)

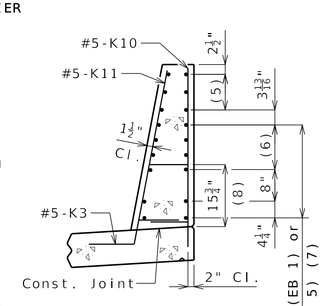

SECTION I-I

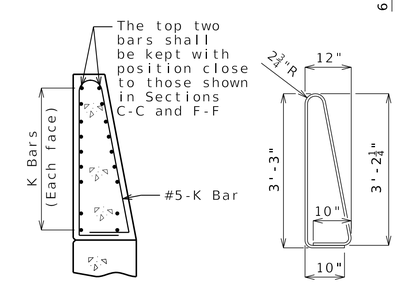

K10-K11 BAR PERMISSIBLE ALTERNATE SHAPE

(Other K bars not shown for clarity)

The K10-K11 bar combination may be furnished as one bar as shown, at the contractor's option.

All dimensions are out to out.

General Notes:

Concrete traffic barrier delineators shall be placed on top of the barrier as shown on Missouri Standard Plan 617.10 and in accordance with Sec 617.

Reinforcing Steel:
Minimum clearance to reinforcing steel shall be 1 1/2" except as shown for bars embedded into end bent.

TYPE D BARRIER AT END BENTS

Detailed JUN 2025
Checked JUN 2025

Note: This drawing is not to scale. Follow dimensions.

STATE OF MISSOURI
DAVID MORANDEIRA NUMBER PE-2021035906
PROFESSIONAL ENGINEER
THIS SHEET HAS BEEN SIGNED, SEALED AND DATED ELECTRONICALLY.

DATE PREPARED	
6/9/2025	
ROUTE	STATE
US-61	MO
DISTRICT	SHEET NO.
BR	A9682-33
COUNTY	
ST. CHARLES	
JOB NO.	
JST0020	
CONTRACT ID.	
PROJECT NO.	
BRIDGE NO.	
A9682	

DATE	DESCRIPTION

MISSOURI HIGHWAYS AND TRANSPORTATION COMMISSION
105 WEST CAPITOL
JEFFERSON CITY, MO 65102
1-888-ASK-MODOT (1-888-275-6636)

HNTB
715 KIRK DRIVE
KANSAS CITY, MO 64105-1310
CERTIFICATE OF AUTHORITY NO. 001270

Bartlett & West
601 MONROE ST., SUITE 201 - JEFFERSON CITY, MO 65101
(573) 634-2022 - FAX (573) 634-8693
CERTIFICATE OF AUTHORITY NO. 000107 - ENGINEERING
WWW.BARTLETTWEST.COM

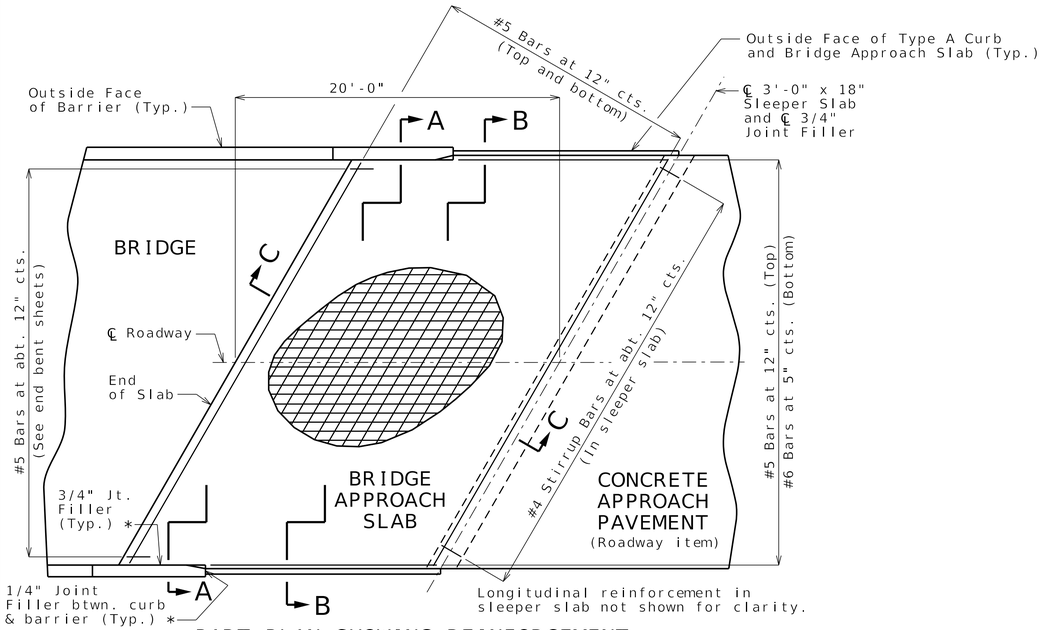

PART PLAN SHOWING REINFORCEMENT

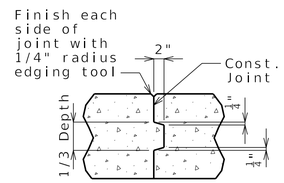

CONSTRUCTION JOINT DETAIL

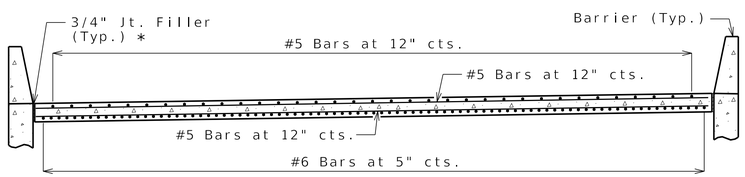

SECTION A-A

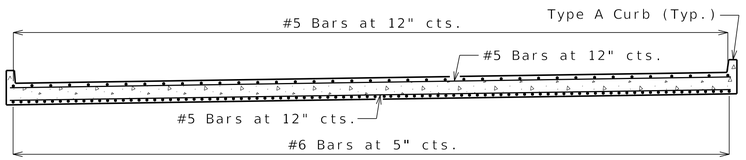

SECTION B-B

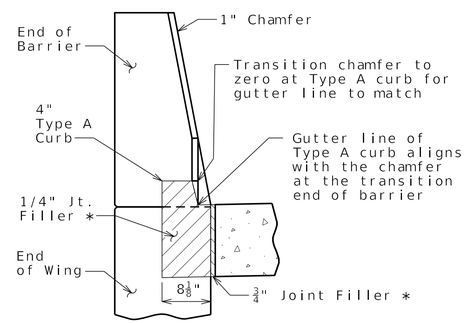

SECTION BETWEEN CURB AND BARRIER

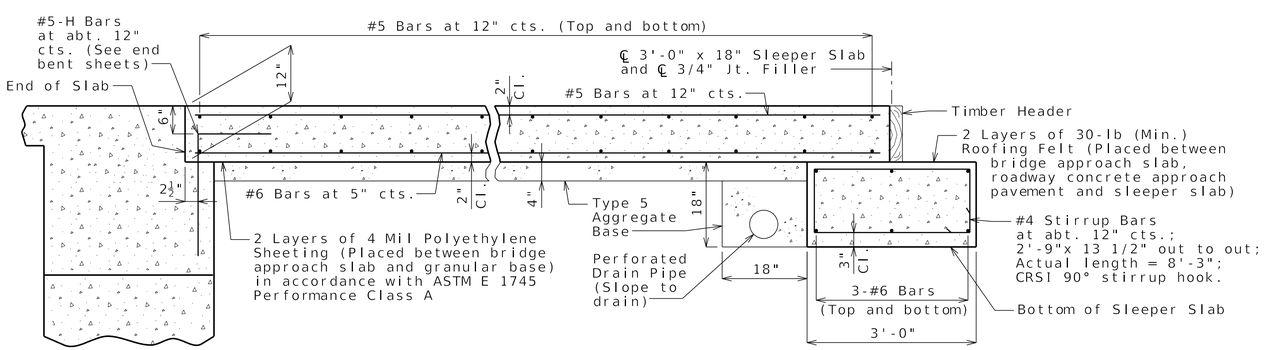

SECTION C-C

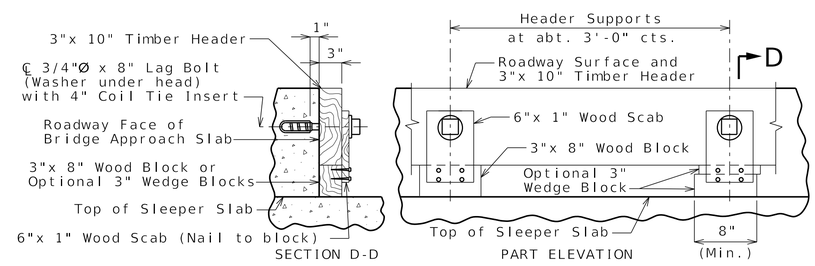

DETAILS OF TIMBER HEADER

Remove timber header when concrete pavement is placed.

General Notes:

All concrete for the bridge approach slab and sleeper slab shall be in accordance with Sec 503 (f'c = 4,000 psi).

The reinforcing steel in the bridge approach slab and the sleeper slab shall be epoxy coated Grade 60 with fy = 60,000 psi.

Drain pipe may be either 6" diameter corrugated metallic-coated pipe underdrain, 4" diameter corrugated polyvinyl chloride (PVC) drain pipe, or 4" diameter corrugated polyethylene (PE) drain pipe.

Minimum clearance to reinforcing steel shall be 1 1/2", unless otherwise shown.

The reinforcing steel in the bridge approach slab and the sleeper slab shall be continuous. The transverse reinforcing steel may be made continuous by providing a minimum lap splice of 29 inches for #5 bars and 44 inches for #6 bars, or by mechanical bar splice.

All joint filler shall be in accordance with Sec 1057 for preformed fiber expansion joint filler except as noted.

The contractor shall pour and satisfactorily finish the bridge slab before placing the bridge approach slab.

For concrete approach pavement details, see roadway plans.

See Missouri Standard Plan 609.00 for details of Type A curb.

* Seal joint between vertical face of approach slab and wing with sealant in accordance with Sec 717 for silicone joint sealant for saw cut and formed joints.

STATE OF MISSOURI
DAVID MORANDEIRA
NUMBER PE-2021035906
PROFESSIONAL ENGINEER

THIS SHEET HAS BEEN SIGNED, SEALED AND DATED ELECTRONICALLY.

DATE PREPARED	
6/9/2025	
ROUTE	STATE
US-61	MO
DISTRICT	SHEET NO.
BR	A9682-34
COUNTY	
ST. CHARLES	
JOB NO.	
JST0020	
CONTRACT ID.	
PROJECT NO.	
BRIDGE NO.	
A9682	

DATE	DESCRIPTION

MISSOURI HIGHWAYS AND TRANSPORTATION COMMISSION
105 WEST CAPITOL
JEFFERSON CITY, MO 65102
1-888-ASK-MODOT (1-888-275-6636)

IMPROVE 70 ALLIANCE

HNTB
715 KIRK DRIVE
KANSAS CITY, MO 64105-1310
CERTIFICATE OF AUTHORITY NO. 001270

Bartlett & West
601 MONROE ST; SUITE 201 - JEFFERSON CITY, MO 65101
PHONE: 573-635-7700 - FAX: 573-635-7431
CERTIFICATE OF AUTHORITY NO. 000107 - ENGINEERING
WWW.BARTLETTWEST.COM

Detailed JUN 2025
Checked JUN 2025

Note: This drawing is not to scale. Follow dimensions.

BRIDGE APPROACH SLAB (MAJOR)

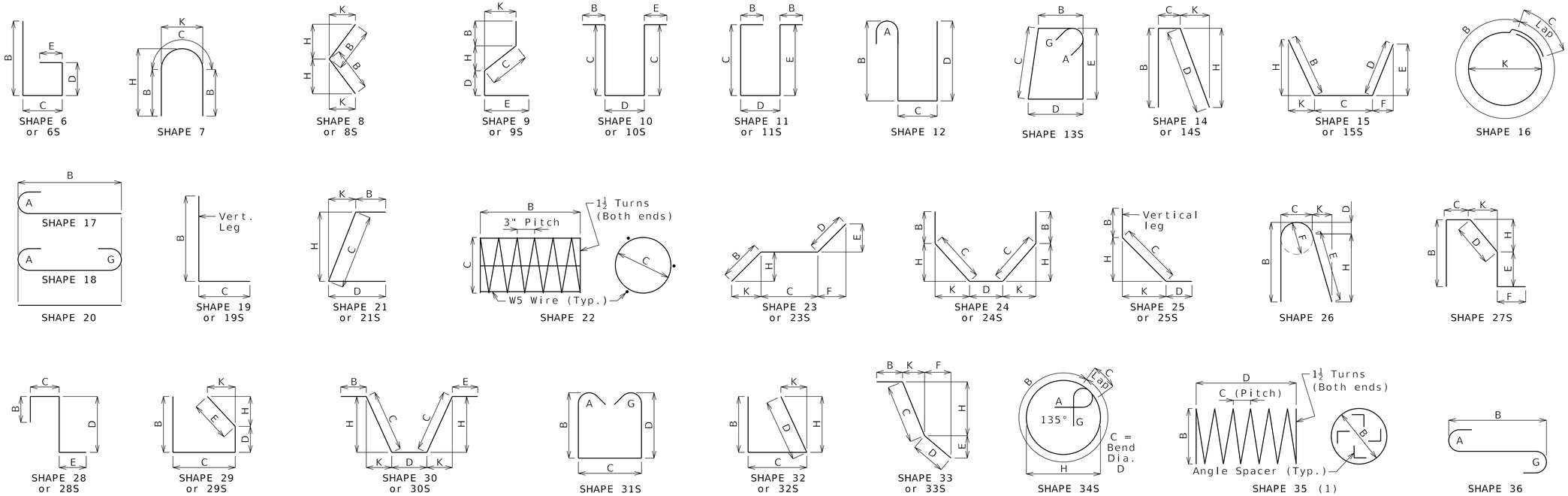

Finished Bend Diameters D and Hook Dimensions

Standard Pin Bend Shapes

Size	Case	D	A or G 90°	A or G 180°	J 180°
#4	1	3"	8"	6"	4"
#5	1	3¾"	10"	7"	5"
#6	1	4½"	12"	8¼"	6"
#7	2	5¼"	14"	9¾"	7"
	3	7"	15"	11½"	8¾"
#8	2	6"	16"	11"	8"
	3	8"	17"	13¼"	10"
#9	1	9½"	19½"	15½"	11¾"
#10	1	10¾"	22"	17½"	13¼"
#11	1	12"	24½"	19½"	14⅞"
#14	1	18¼"	31¼"	27½"	21⅝"
#18	1	24"	41½"	36¼"	28½"

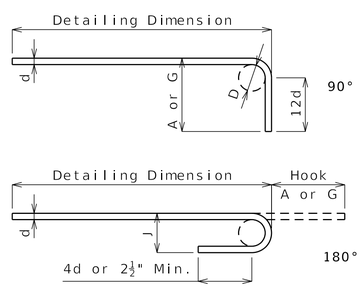

Stirrup Pin Bend Shapes (S)

Size	Case	D	A or G 90°	A or G 135°	A or G 180°	H 135°	J 180°
#4	2	2"	4½"	4½"	5"	2⅞"	3"
	3	3"	5"	5¼"	6"	3"	4"
#5	2	2½"	5¾"	5¾"	5¾"	3⅝"	3¾"
	3	3¾"	6¼"	6½"	7"	3⅞"	5"
#6	1	4½"	12"	7¾"	8¼"	4⅝"	6"

Applicable for all grades of steel.

Case 1 applies to all reinforcement. Case 2 applies to all reinforcement except for galvanized bars. Case 3 applies to galvanized bars only.

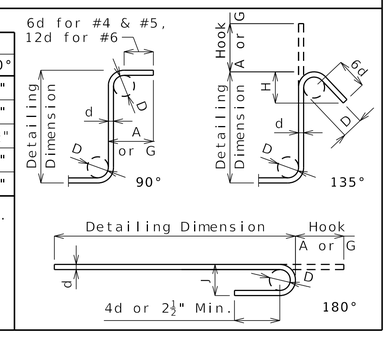

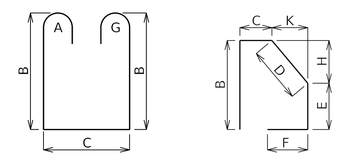

BENDING DIAGRAMS

All dimensions are out to out.

Shapes ending with an S shall be bent in accordance with stirrup pin bend shapes.

Unless otherwise noted, finished bending diameter D is the same for all bends of a shape.

(1) Shall be a deformed or plain spiral bar or wire.

Four angle or channel spacers are required for each column spiral. Spacers are to be placed on inside of spirals. Length and weight of column spirals do not include splices or spacers.

STATE OF MISSOURI
DAVID MORANDEIRA
NUMBER PE-2021035906
PROFESSIONAL ENGINEER

THIS SHEET HAS BEEN SIGNED, SEALED AND DATED ELECTRONICALLY.

DATE PREPARED	
6/9/2025	
ROUTE: US-61	STATE: MO
DISTRICT: BR	SHEET NO.: A9682-35
COUNTY: ST. CHARLES	
JOB NO.: JST0020	
CONTRACT ID.	
PROJECT NO.	
BRIDGE NO.: A9682	

DATE	DESCRIPTION

MISSOURI HIGHWAYS AND TRANSPORTATION COMMISSION
105 WEST CAPITOL
JEFFERSON CITY, MO 65102
1-888-ASK-MODOT (1-888-275-6636)

IMPROVE 70 ALLIANCE

HNTB
715 KIRK DRIVE
KANSAS CITY, MO 64105-1310
CERTIFICATE OF AUTHORITY NO. 001270

Bartlett & West
601 MONROE ST., SUITE 201 - JEFFERSON CITY, MO 65101
(573) 634-2448 - FAX (573) 634-8405
CERTIFICATE OF AUTHORITY NO. E00107 - ENGINEERING
WWW.BARTLETTWEST.COM

Detailed JUN 2025
Checked JUN 2025

Note: This drawing is not to scale. Follow dimensions.

BAR BENDING DIAGRAMS

06/10/2025
Released for Construction

IMPROVE 70 ALLIANCE

Bill of Reinforcing Steel

No. Req.	Size/ Mark	Location	Codes C	SH	V	B ft in.	C ft in.	D ft in.	E ft in.	F ft in.	H ft in.	K ft in.	Nom. Length ft in.	Actual Length ft in.	Weight lb
		End Bent No. 1													
11	6 F100	Wing Brace	E	23S		19.63	8 2.00	19.63	9.75	17.00	17.00	9.75	11 5	11 4	187
5	6 F101	Diaphragm	E	21S			8 1.88	4 3.00			6 11.50	4 3.00	12 5	12 0	90
11	6 F102	Wing Brace	E	23S		19.75	4 8.00	19.75	10.00	17.00	17.00	10.00	7 11	7 11	131
4	6 F103	Diaphragm	E	23S		4 2.88	6 2.75				3 8.25	2 1.00	10 6	10 3	62
18	6 H100	Beam & Diaphragm	E	20		42 5.00							42 5	42 5	1147
30	8 H101	Beam & Diaphragm	E	20		43 9.00							43 9	43 9	3504
18	6 H102	Diaphragm	E	20		10 4.50							10 5	10 5	282
12	6 H103	Diaphragm	E	20		7 7.25							7 7	7 7	137
6	6 H104	Diaphragm	E	20		4 7.50							4 8	4 8	42
4	6 H105	Diaphragm	E	20		3 2.75							3 3	3 3	20
16	8 H106	Wingwall	E	6		12 6.50	16.00						13 11	13 6	577
48	6 H107	Wingwall	E	6		12 6.50	12.00						13 7	13 3	955
7	5 H108	Strand Tie	E	23		15.13	3 2.50	15.13	7.75	13.00	7.75	13.00	5 9	5 8	41
35	6 H109	Beam	E	19		12.00	8 4.00						9 4	9 2	482
39	5 U100	Beam	E	10S			6 8.00	4 3.00					17 7	17 4	705
7	4 U101	Beam	E	10S			2 8.00	4 3.00					9 7	9 5	44
51	4 U102	Beam	E	13S		4 3.00	2 8.00	4 3.00	2 8.00				14 7	14 4	488
53	5 U103	Diaphragm	E	10S			3 10.50	3 8.00					11 5	11 2	617
53	6 U104	Diaphragm	E	19S		3 1.25	4 3.00						7 4	7 2	571
67	5 U105	Diaphragm	E	19S		2 0.00	15.00						3 3	3 2	221
58	4 U106	Diaphragm	E	10S			6.00	4 3.00					5 3	5 1	197
104	6 U107	Diaphragm	E	19S		2 8.50	5 8.50						8 5	8 3	1289
28	5 V100	Beam	E	20		6 8.00							6 8	6 8	195
35	6 V101	Diaphragm	E	20		2 11.50							3 0	3 0	158
2	6 V102	Wingwall	E	20		7 10.00							7 10	7 10	24
18	6 V103	Wingwall	E	20		7 10.00							7 10	7 10	212
2	6 V104	Wingwall	E	20		7 9.00							7 9	7 9	23
18	6 V105	Wingwall	E	20		7 9.00							7 9	7 9	210
		End Bent No. 5													
10	6 F500	Wing Brace	E	23S		20.13	8 0.00	20.63	8.00	19.00	9.00	18.00	11 5	11 4	170
4	6 F501	Diaphragm	E	21S			9 9.50	5 0.00			7 2.00	6 8.00	14 9	14 2	85
10	6 F502	Wing Brace	E	23S		19.88	3 9.00	19.75	8.00	18.00	18.00	8.50	7 1	7 0	105
4	6 F503	Diaphragm	E	23S		4 10.63	6 6.25				3 8.50	3 2.25	11 5	11 3	68
18	6 H500	Beam & Diaphragm	E	20		47 10.00							47 10	47 10	1293
30	8 H501	Beam & Diaphragm	E	20		49 2.00							49 2	49 2	3938
18	6 H502	Diaphragm	E	20		11 8.50							11 9	11 9	318
12	6 H503	Diaphragm	E	20		8 7.25							8 7	8 7	155
6	6 H504	Diaphragm	E	20		5 6.75							5 7	5 7	50
4	6 H505	Diaphragm	E	20		4 0.00							4 0	4 0	24
16	8 H506	Wingwall	E	6		14 11.00	16.00						16 3	15 10	676
44	6 H507	Wingwall	E	6		14 11.00	12.00						15 11	15 7	1030
7	5 H508	Strand Tie	E	23		14.88	3 2.50	14.88	9.75	11.25	9.75	11.25	5 8	5 8	41
35	6 H509	Beam	E	19		9 3.000	12.00						10 3	10 1	530
46	5 U500	Beam	E	31S		6 4.25	5 0.00	6 4.25					18 8	18 5	884
12	4 U501	Beam	E	10S			2 11.75	5 0.00					11 0	10 9	86
51	4 U502	Beam	E	13S		5 0.00	2 11.75	5 0.00	2 11.75				16 9	16 5	559
59	5 U503	Diaphragm	E	31S			3 4.00	4 4.00					8 7	8 4	513
59	6 U504	Diaphragm	E	19S		2 6.00	4 10.75						7 5	7 3	642
65	5 U505	Diaphragm	E	19S		2 0.00	15.00						3 3	3 2	215
63	4 U506	Diaphragm	E	10S			6.00	5 0.00					6 0	5 10	245
118	6 U507	Diaphragm	E	19S		3 9.00	6 4.25						10 1	9 11	1758
26	5 V500	Beam	E	17		6 4.25							6 11	6 11	188
35	6 V501	Diaphragm	E	20		2 7.00							2 7	2 7	136
2	6 V502	Wingwall	E	20		7 6.00							7 6	7 6	23
22	6 V503	Wingwall	E	20		7 6.00							7 6	7 6	248
2	6 V504	Wingwall	E	20		7 7.00							7 7	7 7	23
22	6 V505	Wingwall	E	20		7 7.00							7 7	7 7	251

Bill of Reinforcing Steel

No. Req.	Size/ Mark	Location	Codes C	SH	V	B ft in.	C ft in.	D ft in.	E ft in.	F ft in.	H ft in.	K ft in.	Nom. Length ft in.	Actual Length ft in.	Weight lb
		Int. Bent No. 2													
36	9 D200	Key	E	20		2 6.00							2 6	2 6	306
24	11 H200	Beam	E	17		42 9.75							44 5	44 5	5664
16	11 H201	Beam	E	20		42 9.75							42 10	42 10	3641
20	6 H202	Beam	E	20		40 11.25							40 11	40 11	1229
14	6 H203	Beam	E	10			12.00	4 7.50					6 8	6 4	133
28	6 H204	Beam	E	19		16.25	12 4.00						13 8	13 6	568
254	6 P200	Beam & Column	E	34S		10 12.00	4.50				3 6.00		12 8	12 7	4801
232	6 P201	Drilled Shaft		34S		10 12.00	4.50				3 6.00		12 8	12 7	4385
178	6 U200	Beam	E	13S		3 2.00	4 0.00	3 2.00	4 0.00				15 8	15 2	4055
40	6 U201	Beam	E	10S			4 0.00	3 2.00					11 2	10 10	651
54	4 U202	Beam	E	10S			16.25	4 9.00					7 6	7 3	262
21	11 V200	Column	E	20		20 11.50							21 0	21 0	2343
21	11 V201	Column	E	20		22 0.88							22 1	22 1	2464
21	11 V202	Column	E	20		23 2.25							23 2	23 2	2585
21	11 V203	Column	E	20		24 3.75							24 4	24 4	2715
28	11 V204	Drilled Shaft		20		36 7.50							36 8	36 8	5455
28	11 V205	Drilled Shaft		20		38 7.50							38 8	38 8	5752
		Int. Bent No. 3													
30	9 D300	Key	E	20		2 6.00							2 6	2 6	255
24	11 H300	Beam	E	17		45 0.50							46 8	46 8	5951
16	11 H301	Beam	E	20		45 0.50							45 1	45 1	3832
20	6 H302	Beam	E	20		43 2.00							43 2	43 2	1297
14	6 H303	Beam	E	10			12.00	4 7.50					6 8	6 4	133
24	6 H304	Beam	E	19		15.75	11 10.00						13 2	13 0	469
4	6 H305	Beam	E	19		15.75	13 1.13						14 5	14 3	86
156	4 P300	Beam & Column	E	34S		10 12.00	2.00				3 6.00		11 11	11 10	1233
192	4 P301	Drilled Shaft		34S		10 12.00	2.00				3 6.00		11 11	11 10	1518
198	6 U300	Beam	E	13S		3 2.00	4 0.00	3 2.00	4 0.00				15 8	15 2	4511
40	6 U301	Beam	E	10S			4 0.00	3 2.00					11 2	10 10	651
66	4 U302	Beam	E	10S			15.75	4 9.00					7 5	7 2	316
17	10 V300	Column	E	20		18 11.00							18 11	18 11	1384
17	10 V301	Column	E	20		20 1.50							20 2	20 2	1475
17	10 V302	Column	E	20		21 3.88							21 4	21 4	1561
17	10 V303	Column	E	20		22 6.25							22 6	22 6	1646
32	10 V304	Drilled Shaft		20		30 4.50							30 5	30 5	4188
36	10 V305	Drilled Shaft		20		32 4.50							32 5	32 5	5022

Nominal lengths are based on out to out dimensions shown in bending diagrams and are listed to the nearest inch for fabricator's use. Actual lengths are measured along centerline bar to the nearest inch. Weights are based on actual lengths.

For bending diagrams, see Sheet No. 35.

Codes: C = Required coatings, where E = Epoxy Coated and G = Galvanized.
SH = Required shape, see bending diagrams.
V = Sets of varied bars and number of bars of each length. Bar dimensions vary in equal increments between dimensions shown on this line and the following line and the actual length dimension shown on this line and the following line vary by the specified increment.

All bars shall be Grade 60.

Detailed JUN 2025
Checked JUN 2025

Note: This drawing is not to scale. Follow dimensions.

BILL OF REINFORCING STEEL (1 OF 3)

STATE OF MISSOURI
DAVID MORANDEIRA
NUMBER PE-2021035906
PROFESSIONAL ENGINEER

THIS SHEET HAS BEEN SIGNED, SEALED AND DATED ELECTRONICALLY.

DATE PREPARED 6/9/2025

ROUTE	STATE
US-61	MO
DISTRICT	SHEET NO.
BR	A9682-36

COUNTY: ST. CHARLES
JOB NO.: JST0020
CONTRACT ID.:
PROJECT NO.:
BRIDGE NO.: A9682

DATE	DESCRIPTION

MISSOURI HIGHWAYS AND TRANSPORTATION COMMISSION
105 WEST CAPITOL
JEFFERSON CITY, MO 65102
1-888-ASK-MODOT (1-888-275-6636)

IMPROVE 70 ALLIANCE

HNTB
715 KIRK DRIVE
KANSAS CITY, MO 64105-1310
CERTIFICATE OF AUTHORITY NO. 001270

Bartlett & West
601 MONROE ST. SUITE 201, JEFFERSON CITY, MO 65101
PHONE: 573-635-7627 FAX: 573-635-7628
CERTIFICATE OF AUTHORITY NO. 000107 - ENGINEERING
BWGARTELLTECHNOLOGIES.COM

06/10/2025
Released for Construction

Bill of Reinforcing Steel

No. Req.	Size/ Mark	Location	Codes C	SH	V	Dimensions B ft in.	C ft in.	D ft in.	E ft in.	F ft in.	H ft in.	K ft in.	Nom. Length ft in.	Actual Length ft in.	Weight lb
		Int. Bent No. 4													
36	9 D400	Key	E	20		2 6.00							2 6	2 6	306
24	11 H400	Beam	E	17		47 3.88							48 11	48 11	6237
16	11 H401	Beam	E	20		47 3.88							47 4	47 4	4024
20	6 H402	Beam	E	20		45 5.38							45 5	45 5	1364
14	6 H403	Beam	E	10			12.00	4 7.50					6 8	6 4	133
28	6 H404	Beam	E	19		16.13	12 9.00						14 1	13 11	585
4	6 H405	Beam	E	19		16.13	13 5.00						14 9	14 7	88
228	6 P400	Beam & Column	E	34S		10 12.00	4.50				3 6.00		12 8	12 7	4309
256	6 P401	Drilled Shaft		34S		10 12.00	4.50				3 6.00		12 8	12 7	4838
208	6 U400	Beam	E	13S		3 2.00	4 0.00	3 2.00	4 0.00				15 8	15 2	4738
40	6 U401	Beam	E	10S			4 0.00	3 2.00					11 2	10 10	651
63	4 U402	Beam	E	10S			16.13	4 9.00					7 5	7 3	305
21	11 V400	Column	E	20		18 4.38							18 4	18 4	2046
21	11 V401	Column	E	20		19 7.88							19 8	19 8	2194
21	11 V402	Column	E	20		20 11.38							20 11	20 11	2334
21	11 V403	Column	E	20		22 2.88							22 3	22 3	2482
28	11 V404	Drilled Shaft		20		39 4.50							39 5	39 5	5864
28	11 V405	Drilled Shaft		20		41 4.50							41 5	41 5	6161
		Int. Bent No. 2													
12	6 H250	Diaphragm	E	20		7 6.00							7 6	7 6	135
12	6 H251	Diaphragm	E	20		10 3.00							10 3	10 3	185
30	4 H252	Diaphragm	E	20		10 8.00							10 8	10 8	214
6	4 H253	Diaphragm	E	20		7 6.00							7 6	7 6	30
4	5 H254	Strand Tie	E	23		15.50	3 3.00				8.50	13.00	4 7	4 5	18
10	5 H255	Strand Tie	E	23		15.50	3 3.00	15.50	8.50	13.00	8.50	13.00	5 10	5 10	61
1	6 H257	Diaphragm	E	20		5 6.00							5 6	5 6	8
5	6 H258	Diaphragm	E	20		8 9.00							8 9	8 9	66
1	6 H259	Diaphragm	E	23		2 0.00	3 1.00				12.50	20.50	5 1	4 11	7
72	4 U250	Diaphragm	E	28S			18.00	4 10.00	3 6.50				9 11	9 8	465
24	6 U251	Diaphragm	E	28S			2 2.00	4 10.00	4 10.00				11 10	11 6	415
24	6 U252	Diaphragm	E	28S			2 2.00	3 6.00	4 10.00				10 6	10 2	366
4	6 U253	Diaphragm	E	28S			2 2.00	3 6.00	2 10.00				8 6	8 2	49
1	5 U254	Diaphragm	E	14S			21.00	5 0.00			5 0.00	2.50	6 9	6 8	7
4	5 U255	Diaphragm	E	14S		16.00	21.00	5 0.00			5 0.00	2.50	8 1	7 11	33
2	5 U256	Diaphragm	E	19S		4 5.00	21.00						6 2	6 1	13
3	5 U257	Diaphragm	E	14S		4 5.00	21.00	23.00			23.00	1.00	8 1	7 11	25
1	5 U258	Diaphragm	E	21S			5 4.50	14.50			5 4.50	2.75	6 7	6 6	7
4	5 U259	Diaphragm	E	32S		16.00	14.50	5 4.50			5 4.50	2.75	7 11	7 8	32
2	5 U260	Diaphragm	E	19S		5 5.00	17.00						6 10	6 9	14
3	5 U261	Diaphragm	E	32S		5 5.00	17.00	2 4.50			2 4.50	1.25	9 3	9 0	28
4	6 U262	Diaphragm	E	28S			2 2.00	3 6.00	2 2.50				7 11	7 7	46
11	5 V250	Diaphragm	E	20		5 1.00							5 1	5 1	58

Bill of Reinforcing Steel

No. Req.	Size/ Mark	Location	Codes C	SH	V	Dimensions B ft in.	C ft in.	D ft in.	E ft in.	F ft in.	H ft in.	K ft in.	Nom. Length ft in.	Actual Length ft in.	Weight lb
		Int. Bent No. 3													
12	6 H350	Diaphragm	E	20		7 9.00							7 9	7 9	140
12	6 H351	Diaphragm	E	20		10 6.00							10 6	10 6	189
36	4 H352	Diaphragm	E	20		10 11.00							10 11	10 11	263
4	5 H354	Strand Tie	E	23		16.13	3 3.00				9.50	13.00	4 7	4 5	18
10	5 H355	Strand Tie	E	23		16.13	3 3.00	16.13	9.50	13.00	9.50	13.00	5 11	5 11	62
72	4 U350	Diaphragm	E	28S			18.00	4 10.00	3 6.50				9 11	9 8	465
24	6 U351	Diaphragm	E	28S			2 2.00	4 10.00	5 2.00				12 2	11 10	427
24	6 U352	Diaphragm	E	28S			2 2.00	3 6.00	5 2.00				10 10	10 6	379
6	6 U353	Diaphragm	E	28S	2		2 2.00	3 6.00	3 2.00				8 10	8 6	
		Increment = 7"					2 2.00	3 6.00	4 4.00				10 0	9 8	82
1	5 U354	Diaphragm	E	27S			5 10.00	13.13	2 6.00		8.00	10.38	9 5	9 3	10
4	5 U355	Diaphragm	E	38S			5 10.00	13.13	2 6.00	20.00	8.00	10.38	11 1	10 11	46
1	5 U356	Diaphragm	E	38S				2 4.00	18.00	4 10.00	17.00	22.25	8 8	8 6	9
4	5 U357	Diaphragm	E	38S			18.00	2 4.00	18.00	4 10.00	17.00	22.25	10 2	10 0	42
1	5 U358	Diaphragm	E	21S			5 8.13	16.00			5 8.00	4.75	7 0	6 11	7
4	5 U359	Diaphragm	E	32S		16.00	16.00	5 8.13			5 8.00	4.75	8 4	8 1	34
1	5 U360	Diaphragm	E	19S		5 8.00	16.00						7 0	6 11	7
4	5 U361	Diaphragm	E	32S		5 8.00	16.00	2 8.63			2 8.50	2.25	9 9	9 6	40
4	6 U362	Diaphragm	E	28S			2 2.00	3 6.00	2 0.50				7 9	7 5	45
15	5 V350	Diaphragm	E	20		5 1.00							5 1	5 1	80
		Int. Bent No. 4													
12	6 H450	Diaphragm	E	20		8 0.00							8 0	8 0	144
12	6 H451	Diaphragm	E	20		11 1.00							11 1	11 1	200
30	4 H452	Diaphragm	E	20		11 6.00							11 6	11 6	230
6	4 H453	Diaphragm	E	20		8 0.00							8 0	8 0	32
4	5 H454	Strand Tie	E	23		15.63	3 3.00				10.00	12.00	4 7	4 5	18
10	5 H455	Strand Tie	E	23		15.63	3 3.00	15.63	10.00	12.00	10.00	12.00	5 10	5 10	61
1	6 H457	Diaphragm	E	23		2 0.00	3 1.00				15.50	18.25	5 1	4 11	7
5	6 H458	Diaphragm	E	20		8 3.00							8 3	8 3	62
1	6 H459	Diaphragm	E	20		7 5.00							7 5	7 5	11
72	4 U450	Diaphragm	E	28S			18.00	4 10.00	3 6.50				9 11	9 8	465
24	6 U451	Diaphragm	E	28S			2 2.00	4 10.00	5 3.00				12 3	11 11	430
24	6 U452	Diaphragm	E	28S			2 2.00	3 6.00	5 3.00				10 11	10 7	382
6	6 U453	Diaphragm	E	28S	2		2 2.00	3 6.00	3 7.00				9 3	8 11	
		Increment = 7"					2 2.00	3 6.00	4 9.00				10 5	10 1	86
1	5 U454	Diaphragm	E	38S				2 0.25	17.50	4 9.50	15.75	18.50	8 3	8 2	9
4	5 U455	Diaphragm	E	38S			17.50	2 0.25	17.50	4 9.50	15.75	18.50	9 9	9 7	40
2	5 U456	Diaphragm	E	27S			5 6.00	9.88	2 10.00		6.38	7.50	9 2	9 0	19
3	5 U457	Diaphragm	E	38S			5 6.00	9.88	2 10.00	21.00	6.38	7.50	10 11	10 9	34
1	5 U458	Diaphragm	E	21S			5 6.38	15.00			5 6.25	3.38	6 9	6 8	7
4	5 U459	Diaphragm	E	32S		16.00	15.00	5 6.38			5 6.25	3.38	8 1	7 11	33
2	5 U460	Diaphragm	E	19S		5 6.00	15.00						6 9	6 8	14
3	5 U461	Diaphragm	E	32S		5 6.00	15.00	2 6.50			2 6.50	1.63	9 4	9 1	28
4	6 U462	Diaphragm	E	28S			2 2.00	3 5.50	2 0.00				7 8	7 4	44
15	5 V450	Diaphragm	E	20		5 1.00							5 1	5 1	80

Nominal lengths are based on out to out dimensions shown in bending diagrams and are listed to the nearest inch for fabricator's use. Actual lengths are measured along centerline bar to the nearest inch. Weights are based on actual lengths.

For bending diagrams, see Sheet No. 35.

Codes: C = Required coatings, where E = Epoxy Coated and G = Galvanized.
SH = Required shape, see bending diagrams.
V = Sets of varied bars and number of bars of each length. Bar dimensions vary in equal increments between dimensions shown on this line and the following line and the actual length dimension shown on this line and the following line vary by the specified increment.

All bars shall be Grade 60.

Detailed JUN 2025
Checked JUN 2025

Note: This drawing is not to scale. Follow dimensions.

BILL OF REINFORCING STEEL (2 OF 3)

STATE OF MISSOURI
DAVID MORANDEIRA
NUMBER
PE-2021035906
PROFESSIONAL ENGINEER

THIS SHEET HAS BEEN SIGNED, SEALED AND DATED ELECTRONICALLY.

DATE PREPARED
6/9/2025

ROUTE	STATE
US-61	MO
DISTRICT	SHEET NO.
BR	A9682-37

COUNTY
ST. CHARLES

JOB NO.
JST0020

CONTRACT ID.

PROJECT NO.

BRIDGE NO.
A9682

DATE	DESCRIPTION

MISSOURI HIGHWAYS AND TRANSPORTATION COMMISSION
105 WEST CAPITOL
JEFFERSON CITY, MO 65102
1-888-ASK-MODOT (1-888-275-6636)

HNTB
715 KIRK DRIVE
KANSAS CITY, MO 64105-1310
CERTIFICATE OF AUTHORITY NO. 001270

Bartlett & West
601 MONROE ST. SUITE 201, JEFFERSON CITY, MO 65101
PHONE: 573-635-7627 FAX: 573-635-7628
CERTIFICATE OF AUTHORITY NO. 000107 - ENGINEERING
WWW.BARTLETTWEST.COM

06/10/2025
Released for Construction

IMPROVE 70 ALLIANCE

Bill of Reinforcing Steel

No. Req.	Size/ Mark	Location	Codes C	SH	V	Dimensions B ft in.	C ft in.	D ft in.	E ft in.	F ft in.	H ft in.	K ft in.	Nom. Length ft in.	Actual Length ft in.	Weight lb
		Slab													
71	6 S101	Slab	E	20	1	2 3.00							2 3	2 3	
		Increment=9 7/8"				59 7.00							59 7	59 7	3297
531	6 S102	Slab	E	20		41 6.00							41 6	41 6	33099
11	6 S103	Slab	E	20	1	21 10.00							21 10	21 10	
		Increment=9 3/4"				30 0.00							30 0	30 0	428
534	6 S104	Slab	E	20		30 6.00							30 6	30 6	24463
14	6 S105	Slab	E	20	1	32 8.00							32 8	32 8	
		Increment=6 7/8"				40 2.00							40 2	40 2	766
107	6 S106	Slab	E	20	1	2 2.00							2 2	2 2	
		Increment=6 1/2"				59 8.00							59 8	59 8	4969
1225	6 S107	Slab	E	20		7 6.00							7 6	7 6	13800
336	5 S108	Slab	E	20		53 6.00							53 6	53 6	18749
106	8 S109	Slab	E	20		32 6.00							32 6	32 6	9198
106	8 S110	Slab	E	20		28 3.00							28 3	28 3	7995
106	8 S111	Slab	E	20		19 6.00							19 6	19 6	5519
1	5 S112	Slab	E	20		40 0.00							40 0	40 0	42
71	5 S121	Slab	E	20	1	2 3.00							2 3	2 3	
		Increment=9 7/8"				59 7.00							59 7	59 7	2289
531	5 S122	Slab	E	20		33 6.00							33 6	33 6	18553
11	5 S123	Slab	E	20	1	30 6.00							30 6	30 6	
		Increment=9 3/4"				38 8.00							38 8	38 8	397
534	5 S124	Slab	E	20		39 3.00							39 3	39 3	21861
14	5 S125	Slab	E	20	1	24 7.00							24 7	24 7	
		Increment=6 7/8"				32 1.00							32 1	32 1	414
107	5 S126	Slab	E	20	1	2 2.00							2 2	2 2	
		Increment=6 1/2"				59 8.00							59 8	59 8	3450
606	5 S127	Slab	E	20		54 0.00							54 0	54 0	34131
1	5 S128	Slab	E	20		30 0.00							30 0	30 0	31
1	5 S129	Slab	E	20		60 0.00							60 0	60 0	63
4	4 S130	Slab	E	20		40 0.00							40 0	40 0	107
80	4 S131	Slab	E	10		6.00	5.38	3 8.00	6.00				5 7	5 2	276

Bill of Reinforcing Steel

No. Req.	Size/ Mark	Location	Codes C	SH	V	Dimensions B ft in.	C ft in.	D ft in.	E ft in.	F ft in.	H ft in.	K ft in.	Nom. Length ft in.	Actual Length ft in.	Weight lb
		Barrier													
20	5 K1	Barrier	E	27S		3 8.00	9.25	5.38	3 2.75		5.25	1.00	8 1	7 11	165
76	5 K2	Barrier	E	27S		3 8.00	9.25	14.50	2 5.75		14.25	2.75	8 2	7 11	628
8	5 K3	Barrier	E	27S		22.50	9.25	14.50	7.75	12.00	14.25	2.75	5 6	5 2	43
20	5 K4	Barrier	E	19S	4	2 4.25	10.00						3 2	3 1	
		Increment=1/2"				2 6.25	10.00						3 4	3 3	66
20	5 K5	Barrier	E	38S	4			18.50	9.50	8.25	18.00	4.00	3 0	2 11	
		Increment=1/2"						20.50	9.50	8.25	20.00	4.25	3 2	3 1	63
12	5 K6	Barrier	E	19S		2 6.75	10.00						3 5	3 4	42
12	5 K7	Barrier	E	21S			2 6.63	10.00			2 6.00	6.25	3 5	3 3	41
36	5 K8	Barrier	E	19S	4	2 8.50	10.00						3 7	3 5	
		Increment=3/4"				3 2.50	10.00						4 1	3 11	139
36	5 K9	Barrier	E	21S	4		2 8.50	10.00			2 7.75	6.75	3 6	3 5	
		Increment=3/4"					3 2.50	10.00			3 1.75	7.75	4 1	3 11	136
36	5 K10	Barrier	E	19S		3 3.00	10.00						4 1	4 0	150
36	5 K11	Barrier	E	21S			3 3.00	10.00			3 2.25	7.75	4 1	3 11	147
12	5 K12	Barrier	E	20		14 1.00							14 1	14 1	176
6	5 K13	Barrier	E	20	2	7 4.00							7 4	7 4	
		Increment=36"				13 4.00							13 4	13 4	65
12	5 K14	Barrier	E	20		16 2.00							16 2	16 2	202
6	5 K15	Barrier	E	20	2	9 5.00							9 5	9 5	
		Increment=36"				15 5.00							15 5	15 5	78
12	5 K16	Barrier	E	20		13 5.00							13 5	13 5	168
6	5 K17	Barrier	E	20	2	6 8.00							6 8	6 8	
		Increment=36"				12 8.00							12 8	12 8	60
12	5 K18	Barrier	E	20		17 2.00							17 2	17 2	215
6	5 K19	Barrier	E	20	2	10 5.00							10 5	10 5	
		Increment=36"				16 5.00							16 5	16 5	84
614	5 R1	Barrier	E	26		3 3.00	5.50	2.25	3 1.38	5.50	3 0.75	6.75	6 10	6 9	4323
614	5 R2	Barrier	E	19S		20.50	9.50						2 6	2 5	1548
614	5 R3	Barrier	E	27S			9.50	15.25	5.00	12.00	15.00	3.00	3 6	3 4	2135
120	5 R4	Barrier	E	20		11 9.00							11 9	11 9	1471
10	5 R5	Barrier	E	20		37 4.00							37 4	37 4	389
40	5 R6	Barrier	E	20		44 9.00							44 9	44 9	1867
10	5 R7	Barrier	E	20		56 7.00							56 7	56 7	590
10	5 R8	Barrier	E	20		45 6.00							45 6	45 6	475
10	5 R9	Barrier	E	20		38 5.00							38 5	38 5	401
10	5 R10	Barrier	E	20		54 5.00							54 5	54 5	568
10	5 R11	Barrier	E	20		42 5.00							42 5	42 5	442
62	5 C1	Slip Form	E	20		12 0.00							12 0	12 0	776
2	5 C2	Slip Form	E	20		10 6.00							10 6	10 6	22
		Totals													
	4														1518
	4		E												6283
	5		E												122264
	6														9223
	6		E												128102
	8		E												31408
	9		E												867
	10														9210
	10		E												6065
	11														23232
	11		E												48512
		TOTAL													43183
		TOTAL	E												343500
														TOTAL	386683

Nominal lengths are based on out to out dimensions shown in bending diagrams and are listed to the nearest inch for fabricator's use. Actual lengths are measured along centerline bar to the nearest inch. Weights are based on actual lengths.

For bending diagrams, see Sheet No. 35.

Codes: C = Required coatings, where E = Epoxy Coated and G = Galvanized.
SH = Required shape, see bending diagrams.
V = Sets of varied bars and number of bars of each length. Bar dimensions vary in equal increments between dimensions shown on this line and the following line and the actual length dimension shown on this line and the following line vary by the specified increment.

All bars shall be Grade 60.

Detailed JUN 2025
Checked JUN 2025

Note: This drawing is not to scale. Follow dimensions.

BILL OF REINFORCING STEEL (3 OF 3)

STATE OF MISSOURI
DAVID MORANDEIRA
NUMBER
PE-2021035906
PROFESSIONAL ENGINEER

THIS SHEET HAS BEEN SIGNED, SEALED AND DATED ELECTRONICALLY.

DATE PREPARED
6/9/2025

ROUTE	STATE
US-61	MO
DISTRICT	SHEET NO.
BR	A9682-38

COUNTY
ST. CHARLES

JOB NO.
JST0020

CONTRACT ID.

PROJECT NO.

BRIDGE NO.
A9682

DESCRIPTION	DATE

MISSOURI HIGHWAYS AND TRANSPORTATION COMMISSION
105 WEST CAPITOL
JEFFERSON CITY, MO 65102
1-888-ASK-MODOT (1-888-275-6636)

IMPROVE 70 ALLIANCE

HNTB
715 KIRK DRIVE
KANSAS CITY, MO 64105-1310
CERTIFICATE OF AUTHORITY
NO. 001270

Bartlett & West
601 MONROE ST. SUITE 201, JEFFERSON CITY, MO 65101
PHONE: 573-634-2448 FAX: 573-634-5881
CERTIFICATE OF AUTHORITY NO. 000107 - ENGINEERING
WWW.BARTLETTWEST.COM

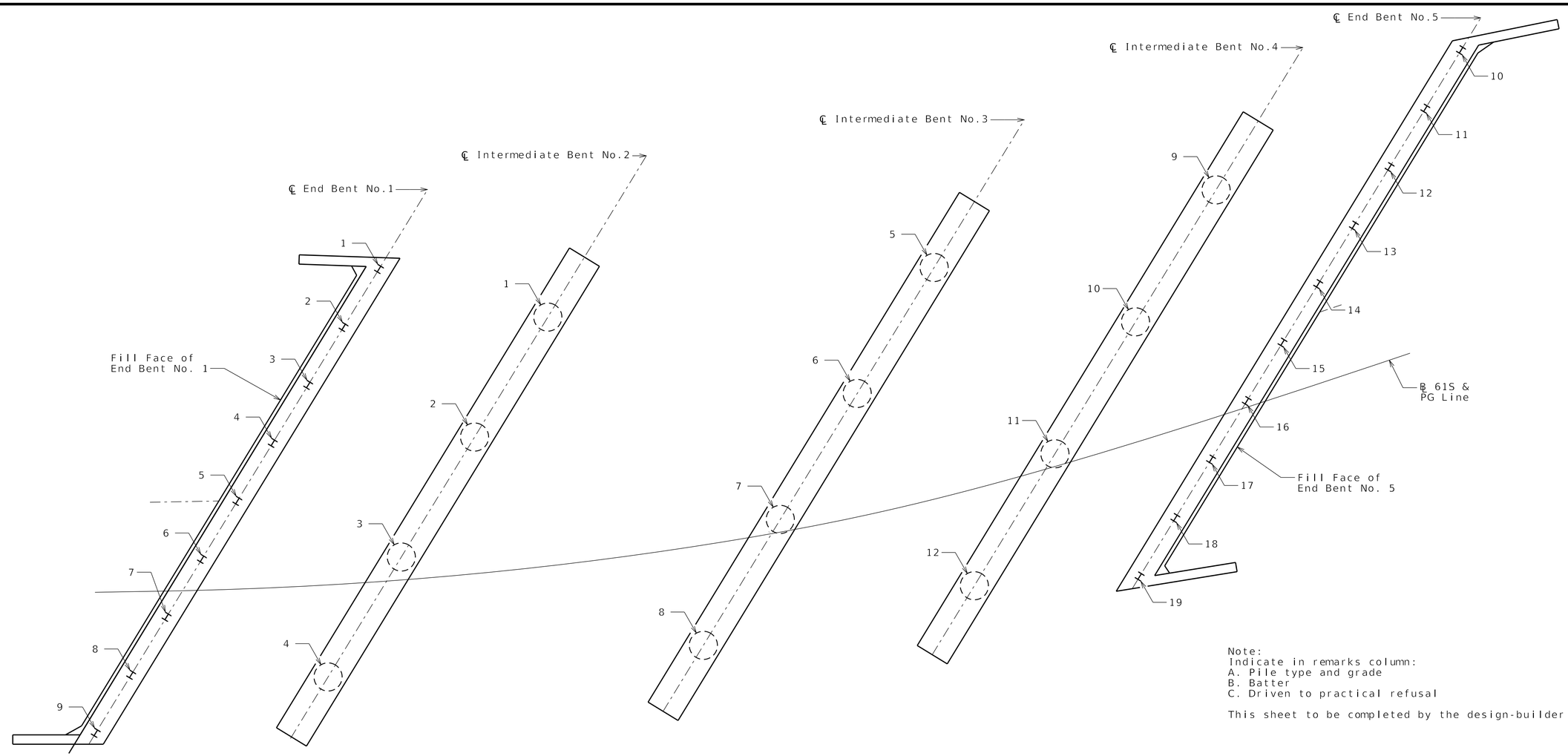

Note:
Indicate in remarks column:
A. Pile type and grade
B. Batter
C. Driven to practical refusal

This sheet to be completed by the design-builder.

PART PLAN SHOWING PILE & DRILLED SHAFT NUMBERING FOR RECORDING AS-BUILT PILE DATA & AS-BUILT DRILLED SHAFT DATA

As-Built Pile Data

Pile No.	Length in Place (ft)	Computed Nominal Axial Compressive Resistance (kips)	Remarks
			End Bent No. 1
1			
2			
3			
4			
5			
6			
7			
8			
9			

As-Built Pile Data

Pile No.	Length in Place (ft)	Computed Nominal Axial Compressive Resistance (kips)	Remarks
			End Bent No. 5
10			
11			
12			
13			
14			
15			
16			
17			
18			
19			

As-Built Drilled Shaft Data

Shaft No.	Top of Sound Rock (Elev.)	Tip of Casing (Elev.)	Bottom of Rock Socket (Elev.)	Remarks
				Intermediate Bent No. 2
1				
2				
3				
4				
				Intermediate Bent No. 3
5				
6				
7				
8				
				Intermediate Bent No. 4
9				
10				
11				
12				

AS-BUILT PILE AND DRILLED SHAFT DATA

Detailed JUN 2025
Checked JUN 2025

Note: This drawing is not to scale. Follow dimensions.

STATE OF MISSOURI
DAVID MORANDEIRA
NUMBER
PE-2021035906
PROFESSIONAL ENGINEER

THIS SHEET HAS BEEN SIGNED, SEALED AND DATED ELECTRONICALLY.

DATE PREPARED
6/9/2025

ROUTE	STATE
US-61	MO
DISTRICT	SHEET NO.
BR	A9682-39

COUNTY
ST. CHARLES

JOB NO.
JST0020

CONTRACT ID.

PROJECT NO.

BRIDGE NO.
A9682

DATE	DESCRIPTION

MISSOURI HIGHWAYS AND TRANSPORTATION COMMISSION
105 WEST CAPITOL
JEFFERSON CITY, MO 65102
1-888-ASK-MODOT (1-888-275-6636)
MoDOT
IMPROVE 70 ALLIANCE
HNTB
715 KIRK DRIVE
KANSAS CITY, MO 64105-1310
CERTIFICATE OF AUTHORITY
NO. 001270
Bartlett & West
601 MONROE ST., SUITE 201 - JEFFERSON CITY, MO 65101
PHONE: 573-634-2022
CERTIFICATE OF AUTHORITY NO. 000107 - ENGINEERING
WWW.BARTLETTWEST.COM

06/10/2025
Released for Construction

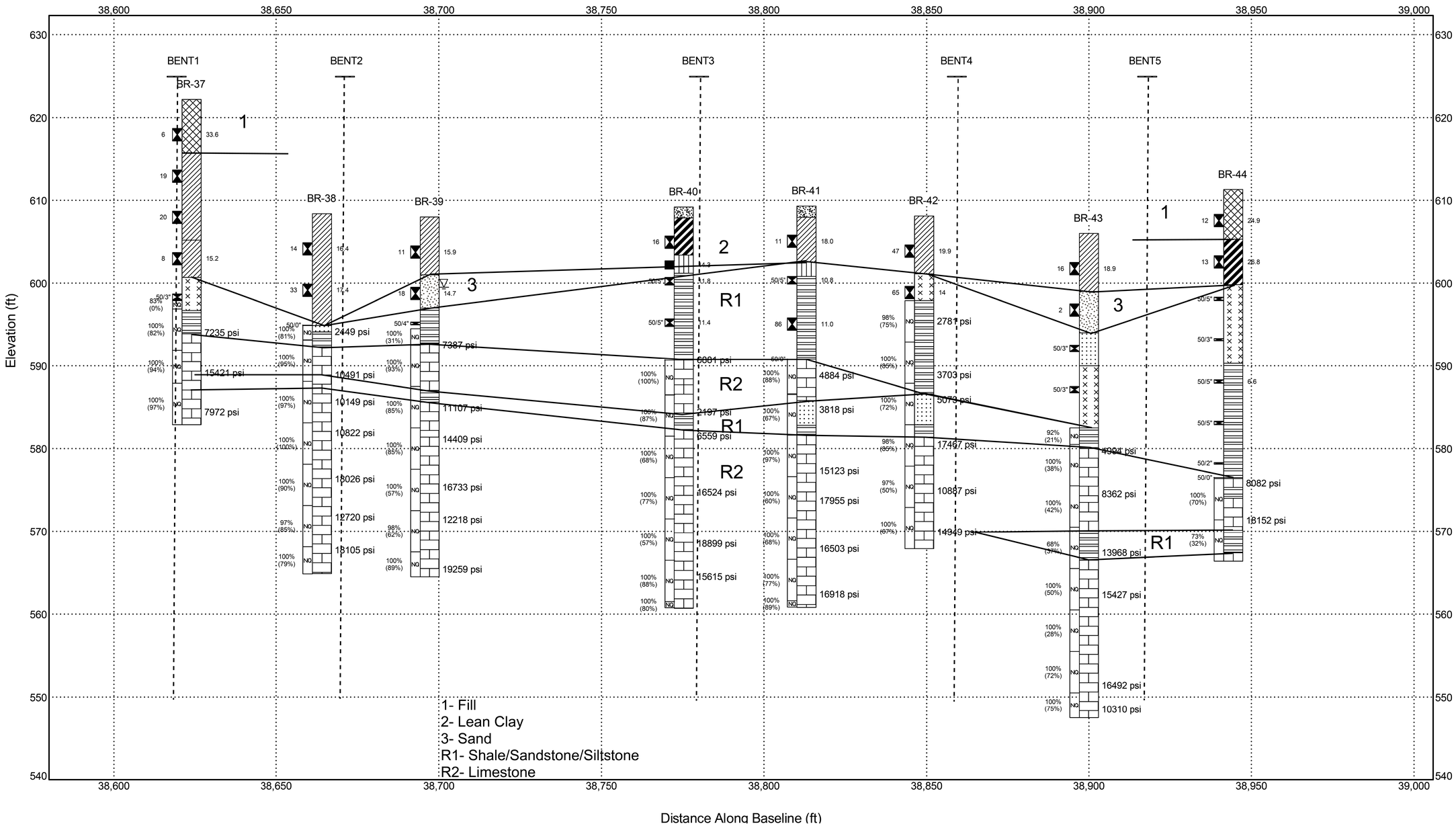

Note: For locations of borings, see Sheet No. 2.

Detailed JUN 2025
Checked JUN 2025

Note: This drawing is not to scale. Follow dimensions.

Sheet 40 of 43

BORING DATA (1 OF 2)

STATE OF MISSOURI
DAVID MORANDEIRA
NUMBER
PE-2021035906
PROFESSIONAL ENGINEER

THIS SHEET HAS BEEN SIGNED, SEALED AND DATED ELECTRONICALLY.

DATE PREPARED	6/9/2025
ROUTE	US-61
STATE	MO
DISTRICT	BR
SHEET NO.	A9682-40
COUNTY	ST. CHARLES
JOB NO.	JST0020
CONTRACT ID.	
PROJECT NO.	
BRIDGE NO.	A9682

DESCRIPTION | DATE

MISSOURI HIGHWAYS AND TRANSPORTATION COMMISSION
105 WEST CAPITOL
JEFFERSON CITY, MO 65102
1-888-ASK-MODOT (1-888-275-6636)

IMPROVE 70 ALLIANCE

HNTB
715 KIRK DRIVE
KANSAS CITY, MO 64105-1310
CERTIFICATE OF AUTHORITY
NO. 001270

Bartlett & West
601 MONROE ST., SUITE 201 - JEFFERSON CITY, MO 65101
PHONE: (573) 634-2448 FAX: (573) 634-8693
CERTIFICATE OF AUTHORITY NO. 000107 - ENGINEERING
WWW.BARTLETTWEST.COM

B_A9682_036_JST0020_BORDATA-1.dgn 9:27:27 AM 6/9/2025

06/10/2025
Released for Construction

TYPICAL BORING

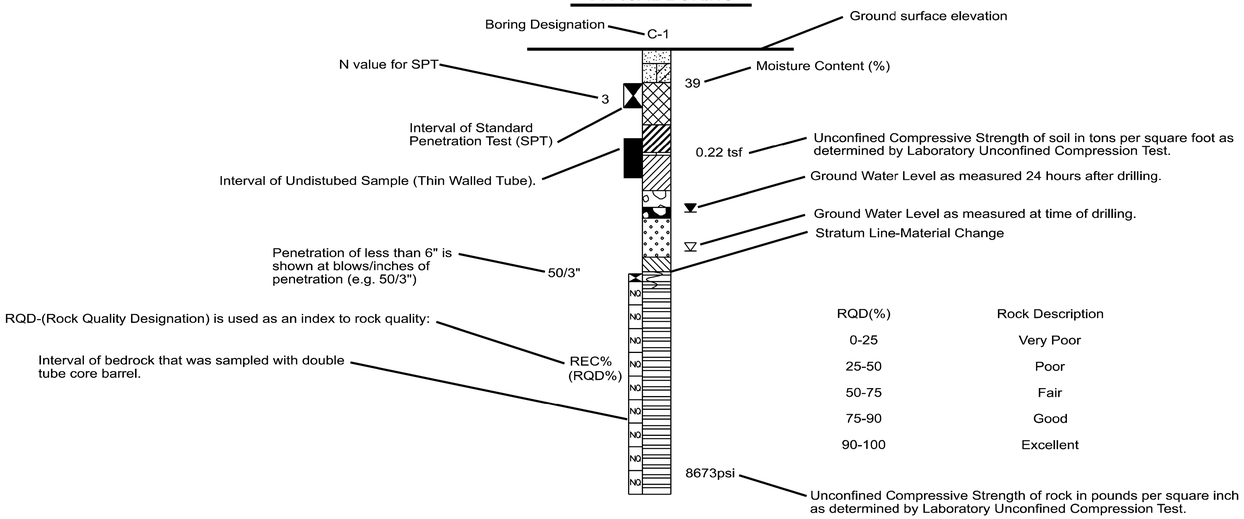

RQD(%)	Rock Description
0-25	Very Poor
25-50	Poor
50-75	Fair
75-90	Good
90-100	Excellent

KEY TO BORING LOG SYMBOLS

LITHOLOGIC SYMBOLS (Unified Soil Classification System)

- Lean Clay (CL)
- Fat Clay (CH)
- Lean to Fat Clay
- Low Plastic Silt (ML)
- Poorly Graded Sand (SP)
- Well Graded Sand (SW)
- Clayey Sand (SC)
- Poorly Graded Gravel (GP)
- Boulders
- Clayey Gravel (GC)
- Gravel with Fat Clay (GP-GC)
- Asphalt
- Fill
- Topsoil
- Concrete
- Peat
- Poorly Graded Sand with Clayey Sand (SP-SC)

LITHOLOGIC SYMBOLS (Rock)

- Coal
- Dolomite
- Limestone
- Sandstone
- Shale
- Gypsum
- Weathered Limestone
- Weathered Shale
- Gypsiferous Shale

SAMPLER SYMBOLS

- Auger Cuttings
- Grab
- Modified California Sampler
- NQ Rock Core
- NX Core Barrel
- Standard Penetration Test
- Shelby Tube

DRILLING METHODS

- Core Barrel
- Hollow Stem Auger
- Rotary
- Solid Stem Auger

ABBREVIATIONS

HSA	-	Hollow Stem Auger
SSA	-	Solid Stem Auger
ST	-	Shelby Tube
SPT	-	Standard Penetration Test
NATD	-	None At Time of Drilling
N/A	-	Not Available

STATE OF MISSOURI
DAVID MORANDEIRA
NUMBER
PE-2021035906
PROFESSIONAL ENGINEER

THIS SHEET HAS BEEN SIGNED, SEALED AND DATED ELECTRONICALLY.

DATE PREPARED 6/9/2025

ROUTE	STATE
US-61	MO
DISTRICT	SHEET NO.
BR	A9682-41

COUNTY: ST. CHARLES
JOB NO.: JST0020
CONTRACT ID.:
PROJECT NO.:
BRIDGE NO.: A9682

DATE	DESCRIPTION

MISSOURI HIGHWAYS AND TRANSPORTATION COMMISSION
105 WEST CAPITOL
JEFFERSON CITY, MO 65102
1-888-ASK-MODOT (1-888-275-6636)

IMPROVE 70 ALLIANCE

HNTB
715 KIRK DRIVE
KANSAS CITY, MO 64105-1310
CERTIFICATE OF AUTHORITY
NO. 001270

Bartlett & West
601 MONROE ST. SUITE 201, JEFFERSON CITY, MO 65101
PHONE: 573.634.2448
CERTIFICATE OF AUTHORITY NO. 000107 - ENGINEERING
BWGARTLETTWEST.COM

Detailed JUN 2025
Checked JUN 2025

Note: For locations of borings, see Sheet No. 2.
Note: This drawing is not to scale. Follow dimensions.

BORING DATA (2 OF 2)

06/10/2025
Released for Construction

BENCHMARK 100
74 /5/8x24_ROD_W/CAP

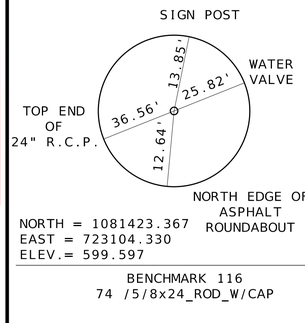

NORTH = 1081423.367
EAST = 723104.330
ELEV.= 599.597

BENCHMARK 113
74 /5/8x24_ROD_W/CAP

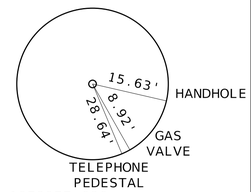

NORTH = 1078977.686
EAST= 728186.747
ELEV.= 623.007

BENCHMARK 114
74 /5/8x24_ROD_W/CAP

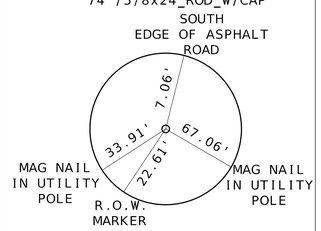

NORTH = 1082531.641
EAST= 727818.620
ELEV.= 633.117

BENCHMARK 115
74 /5/8x24_ROD_W/CAP

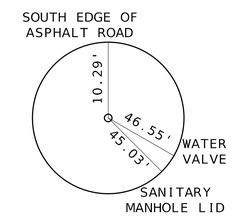

NORTH = 1082444.293
EAST= 729392.876
ELEV.= 619.994

BENCHMARK 116
74 /5/8x24_ROD_W/CAP

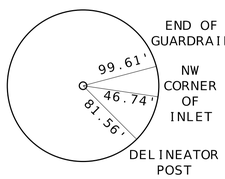

NORTH = 1082653.370
EAST = 723222.089
ELEV.= 605.972

BENCHMARK 200
75 -BM 2IN SQ CUT

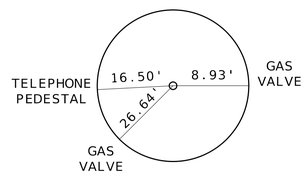

NORTH = 1078971
EAST= 728573
ELEV.= 613.97

BENCHMARK 208
75 BM 2IN SQ CUT

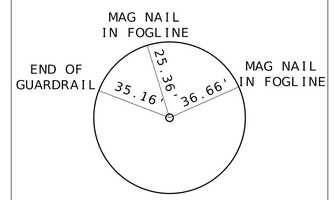

NORTH = 1082525
EAST= 721080
ELEV.= 597.57

BENCHMARK 209
75 -BM 2IN SQ CUT

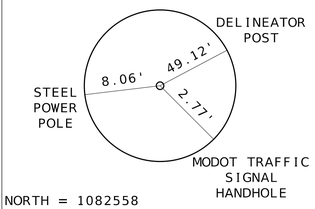

NORTH = 1082558
EAST= 721763
ELEV.= 599.72

BENCHMARK 210
74 /5/8x24_ROD_W/CAP

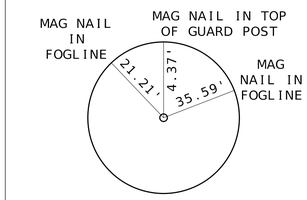

NORTH = 1082628.386
EAST= 722867.362
ELEV.= 604.348

BENCHMARK 211
75 -BM 2IN SQ CUT

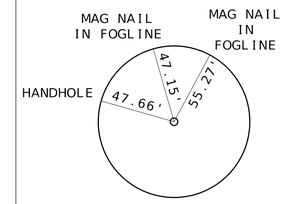

NORTH = 1082667
EAST= 723955
ELEV.= 602.59

BENCHMARK 212
75 -BM 2IN SQ CUT

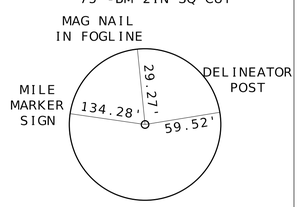

NORTH = 1082716
EAST = 724964
ELEV.= 610.96

BENCHMARK 213
75 -BM 2IN SQ CUT

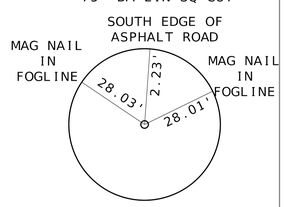

NORTH = 1082709
EAST= 726010
ELEV.= 622.86

BENCHMARK 214
75 -BM 2IN SQ CUT

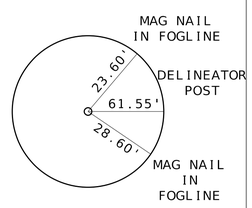

NORTH = 1082643
EAST= 727148
ELEV.= 631.52

BENCHMARK 215
74 /5/8x24_ROD_W/CAP

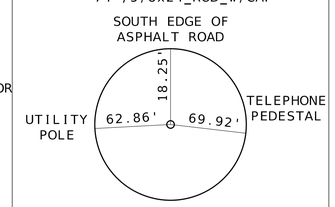

NORTH = 1082500.421
EAST= 728168.824
ELEV.= 626.184

BENCHMARK 216
75 -BM 2IN SQ CUT

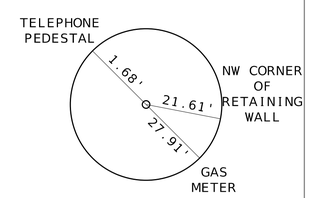

NORTH = 1082415
EAST= 729223
ELEV.= 616.20

BENCHMARK 217
75 -BM 2IN SQ CUT

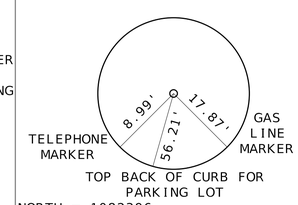

NORTH = 1082396
EAST= 730135
ELEV.= 612.21

BENCHMARK 220
75 -BM 2IN SQ CUT

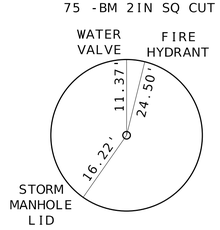

NORTH = 1080588
EAST= 726887
ELEV.= 602.07

BENCHMARK 228
75 -BM 2IN SQ CUT

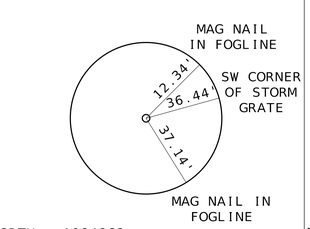

NORTH = 1084862
EAST= 722908
ELEV.= 656.76

BENCHMARK 229
74 /5/8x24_ROD_W/CAP

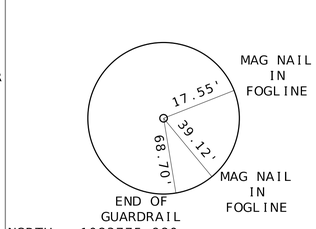

NORTH = 1083775.980
EAST= 723240.823
ELEV.= 619.275

STATE OF MISSOURI
DAVID MORANDEIRA NUMBER PE-2021035906
PROFESSIONAL ENGINEER

THIS SHEET HAS BEEN SIGNED, SEALED AND DATED ELECTRONICALLY.

DATE PREPARED: 6/9/2025
ROUTE: US-61 | STATE: MO
DISTRICT: BR | SHEET NO.: A9682-42
COUNTY: ST. CHARLES
JOB NO.: JST0020
CONTRACT ID.
PROJECT NO.
BRIDGE NO.: A9682

DATE	DESCRIPTION

MISSOURI HIGHWAYS AND TRANSPORTATION COMMISSION
105 WEST CAPITOL
JEFFERSON CITY, MO 65102
1-888-ASK-MODOT (1-888-275-6636)

IMPROVE 70 ALLIANCE

HNTB
715 KIRK DRIVE
KANSAS CITY, MO 64105-1310
CERTIFICATE OF AUTHORITY
NO. 001270

Bartlett & West
401 MONROE ST, SUITE 201 - JEFFERSON CITY, MO 65101
(573) 634-2448 - FAX (573) 634-8405
CERTIFICATE OF AUTHORITY NO. 000167 - ENGINEERING
WWW.BARTLETTWEST.COM

Detailed JUN 2025
Checked JUN 2025

Note: This drawing is not to scale. Follow dimensions.

SURVEY CONTROL POINTS

06/10/2025
Released for Construction

ALL PROJECT COORDINATES HAVE BEEN PROJECTED FROM THE MISSOURI STATE PLANE COORDINATE (SPC) SYSTEM OF 1983 USING AN AVERAGE PROJECT PROJECTION (GRID TO GROUND) FACTOR. TO GET BACK TO STATE PLANE COORDINATES, MULTIPLY THE PROJECT COORDINATES BY THE AVERAGE GRID FACTOR AS SHOWN IN THE "REFERENCE CONTROL INFORMATION" PORTION OF THIS TABLE.

PROJECT COORDINATE INFORMATION

COORDINATE SYSTEM	MISSOURI STATE PLANE, EAST ZONE
HORIZONTAL DATUM	NAD83 (2011)
VERTICAL DATUM	NAVD88
GEOID MODEL	GEOID 18
ELEVATIONS DETERMINED BY	BARTLETT & WEST USED OPUS SOLUTIONS FOR THE HORIZONTAL COORDINATES AND HELD THE OPUS VERTICAL ELEVATION FOR PRIMRARY CONTROL POINTS 1 THRU 3. A DIGITAL LEVEL LOOP WAS USED FOR THE REMAINING PRIMARY CONTROL POINTS, AND VERTICAL CONTROL POINTS
PROJECT PROJECTION FACTOR	1.0000878

REFERENCE CONTROL INFORMATION

COORDINATE SYSTEM	MISSOURI COORDINATE SYSTEM OF 1983
CONTROL STATION	MISSOURI CORS
DESIGNATION	MODOT OFALLON CORS ARP
CORS_ID	MOOF
PID	DM4688
LATITUDE	N38°45'14.06179"
LONGITUDE	W91°41'44.78025"
NORTHING (M)	324131.153
EASTING (M)	232983.488
ZONE	EAST
PROJECT AVERAGE GRID FACTOR	0.99991221

EXAMPLE OF PROJECT COORDINATE TO S.P.C.

PROJECT NORTHING X AVERAGE GRID FACTOR
= STATE PLANE NORTHING
PROJECT EASTING X AVERAGE GRID FACTOR
= STATE PLANE EASTING

EXAMPLE: CONTROL POINT #___
N _____.____ X _._____ = N _____.___
E _____.____ X _._____ = E _____.___

LINEAR UNIT CONVERSION

1 METER = 3.280833333 US SURVEY FEET (USFT)

COORDINATE POINT LISTING

SHEET NO	STATION	LOCATION	OFFSET (USFT)	MODIFIED STATE PLANE (GROUND) NORTHING (US SURVEY FT)	EASTING (US SURVEY FT)	ELEVATION (US SURVEY FT)	DESCRIPTION	GPK POINT ID
PROJECT CONTROL POINTS								
	STA 1272+83.75	I-70	1286.86' RT.	1081423.367	723104.330	599.60	74 /5/8x24_ROD_W/CAP	BM-100
	STA 41+40.91	I-64	626.94' RT.	1078977.686	728186.747	623.01	74 /5/8x24_ROD_W/CAP	BM-113
	STA 1320+80.05	I-70	129.99' RT.	1082531.641	727818.620	633.12	74 /5/8x24_ROD_W/CAP	BM-114
	STA 1336+56.72	I-70	125.22' RT.	1082444.293	729392.876	620.00	74 /5/8x24_ROD_W/CAP	BM-115
	STA 1274+58.72	RAMP 70E-64E	57.46' LT.	1082653.370	723222.089	605.97	74 /5/8x24_ROD_W/CAP	BM-116
	STA 44+49.76	I-64	394.74' RT.	1078971	728573	613.97	75 -BM 2IN SQ CUT	BM-200
	STA 1253+21.17	I-70	78.18' RT.	1082525	721080	597.57	75 BM 2IN SQ CUT	BM-208
	STA 1260+04.89	I-70	81.53' RT.	1082558	721763	599.72	75 -BM 2IN SQ CUT	BM-209
	STA 1271+12.53	RAMP 70E-64E	6.49' RT.	1082628.386	722867.362	604.35	74 /5/8x24_ROD_W/CAP	BM-210
	STA 389+85.81	US-61 S	98.77' LT.	1082667	723955	602.59	75 -BM 2IN SQ CUT	BM-211
	STA 1292+13.84	I-70	73.52' RT.	1082716	724964	610.96	75 -BM 2IN SQ CUT	BM-212
	STA 1302+63.42	I-70	57.72' RT.	1082709	726010	622.86	75 -BM 2IN SQ CUT	BM-213
	STA 1313+59.87	RAMP 61S-70E	22.92' LT.	1082643	727148	631.52	75 -BM 2IN SQ CUT	BM-214
	STA 1324+31.47	I-70	140.70' RT.	1082500.421	728168.824	626.19	74 /5/8x24_ROD_W/CAP	BM-215
	STA 1334+88.64	I-70	164.71' RT.	1082415	729223	616.20	75 -BM 2IN SQ CUT	BM-216
	STA 1344+00.30	I-70	130.222' RT	1082396	730135	612.21	75 -BM 2IN SQ CUT	BM-217
	STA 21+33.02	I-64	225.33' RT.	1080588	726887	602.07	75 -BM 2IN SQ CUT	BM-220
	STA 364+97.19	US-61	64.17' RT.	1084862	722908	656.76	75 -BM 2IN SQ CUT	BM-228
	STA 376+31.63	US-61 S	59.50' RT.	1083775.980	723240.823	619.28	74 /5/8x24_ROD_W/CAP	BM-229

STATE OF MISSOURI
DAVID MORANDEIRA
NUMBER
PE-2021035906
PROFESSIONAL ENGINEER

THIS SHEET HAS BEEN SIGNED, SEALED AND DATED ELECTRONICALLY.

DATE PREPARED 6/9/2025

ROUTE	STATE
US-61	MO
DISTRICT	SHEET NO.
BR	A9682-43

COUNTY: ST. CHARLES
JOB NO.: JST0020
CONTRACT ID.:
PROJECT NO.:
BRIDGE NO.: A9682

DATE	DESCRIPTION

MISSOURI HIGHWAYS AND TRANSPORTATION COMMISSION
105 WEST CAPITOL
JEFFERSON CITY, MO 65102
1-888-ASK-MODOT (1-888-275-6636)

IMPROVE 70 ALLIANCE

HNTB
715 KIRK DRIVE
KANSAS CITY, MO 64105-1310
CERTIFICATE OF AUTHORITY NO. 001270

Bartlett & West
401 MONROE ST, SUITE 201 - JEFFERSON CITY, MO 65101
PHONE: 314-894-6100
CERTIFICATE OF AUTHORITY NO. 000167 - ENGINEERING
WWW.BARTLETTWEST.COM

Detailed JUN 2025
Checked JUN 2025

Note: This drawing is not to scale. Follow dimensions.

SURVEY CONTROL DATA