# (66.8'-66.8') CONTINUOUS PRESTRESSED CONCRETE NU-GIRDER SPANS (01°13'46" RA)

SEC/SUR 08 TWP 48N RGE 12W

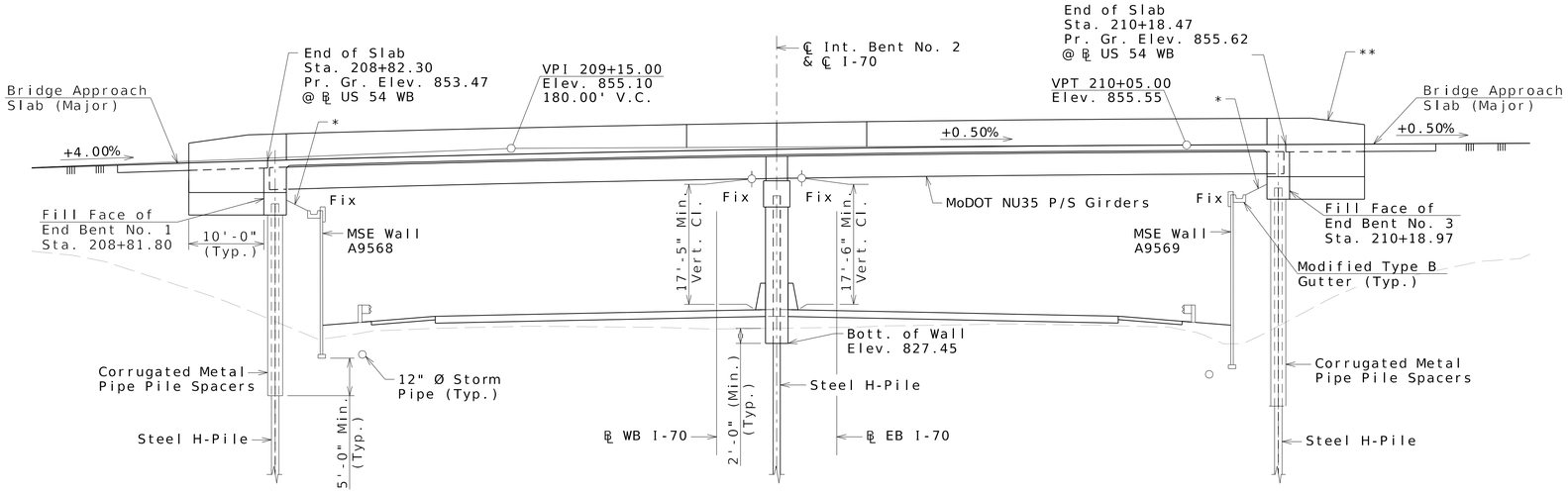


GENERAL ELEVATION

* 2:1 (H:V) Slope (Normal) with Aggregate Slope Protection. Aggregate slope protection under the bridge shall be select granular backfill.

** Taper for guardrail attachment is not required at southwest corner of Type D Barrier at End Bent No. 3

Indicates location of borings.

**Notice and Disclaimer Regarding Boring Log Data**

The locations of all subsurface borings for this structure are shown on the plan sheet for this structure. The boring data for all locations indicated, as well as any other boring logs or other factual records of subsurface data and investigations performed by the Design-Build Team for the design of the project, are shown on Sheet Nos. 52 thru 56 and may be included in the Electronic Bridge Deliverables. Additional borings performed by the department will also be availble from the Project Contact upon written request. No greater significance or weight should be given to the boring data depicted on the plan sheets than is given to the subsurface data available from the district or elsewhere.

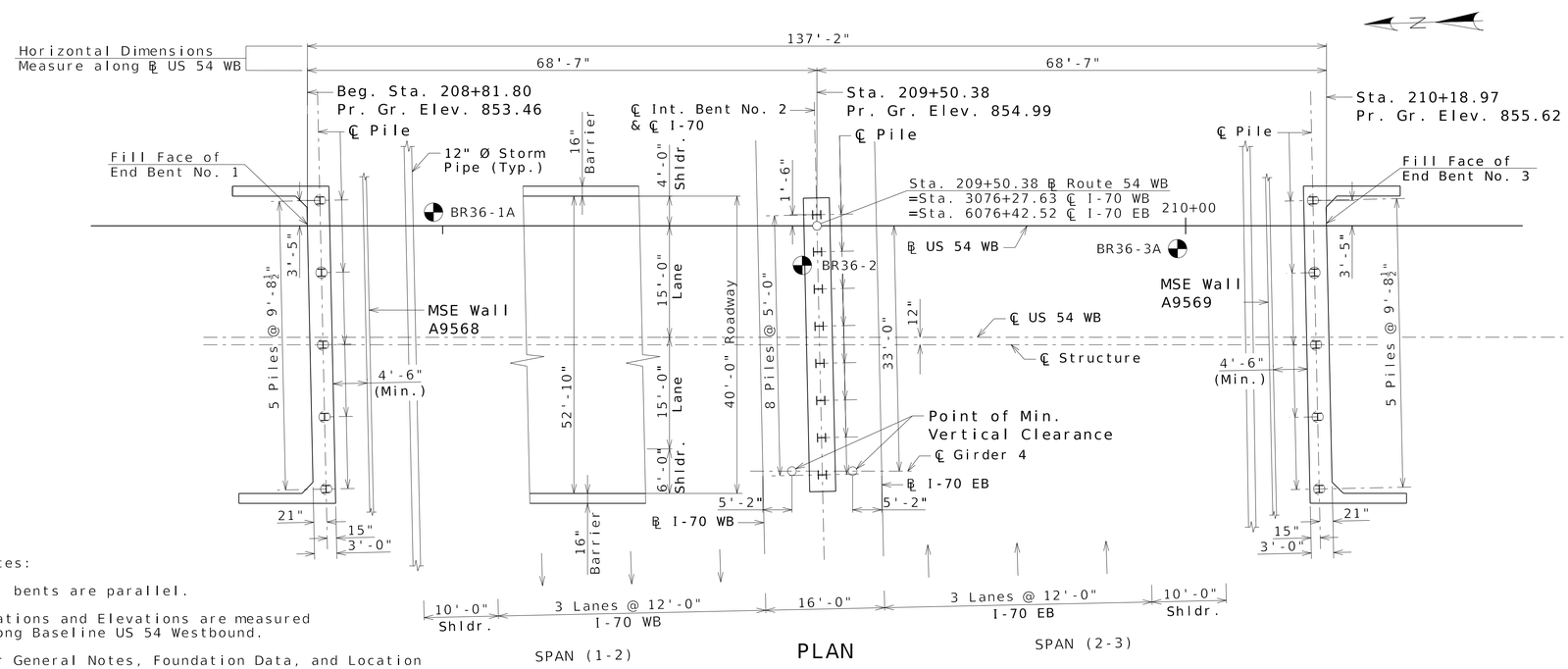


PLAN

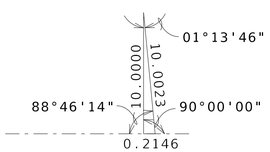


B.M. 372 - ELEVATION = 858.344
STATE PLANE (1983 CENTRAL ZONE)
NORTHING 1675279.45
EASTING 857811.74
LATITUDE 38.94353056 DEGREES
LONGITUDE -91.94107778 DEGREES
POINT DESCRIPTION CUT SQUARE

Notes:

All bents are parallel.

Stations and Elevations are measured along Baseline US 54 Westbound.

For General Notes, Foundation Data, and Location Sketch, see Sheet No. 2.

## BRIDGE: ROUTE 54 WB OVER I-70

STATE ROAD: ROUTE 54
IN KINGDOM CITY
BGN. STA. 208+81.80

Designed July 2024
Detailed Aug 2024
Checked Dec 2024

Note: This drawing is not to scale. Follow dimensions.



STATE OF MISSOURI
OSMAN MOHAMMED
NUMBER PE-2021003145
PROFESSIONAL ENGINEER

02/20/2025 8:17:40 AM
Osman Mohammed
MO PE-2021003145

| DATE PREPARED | |
|---|---|
| 19-FEB-2025 | |
| ROUTE 54WB | STATE MO |
| DISTRICT BR | SHEET NO. 1 |
| COUNTY CALLAWAY | |
| JOB NO. JST0021 | |
| CONTRACT ID. | |
| PROJECT NO. | |
| BRIDGE NO. A9556 | |

| DATE | DESCRIPTION |
|---|---|
| 09/16/2024 | REV. A - PRELIMINARY REVIEW |
| 01/21/2025 | REV. B - FINAL REVIEW |
| 02/19/2025 | REV. 0 - RELEASED FOR CONSTRUCTION |

MISSOURI HIGHWAYS AND TRANSPORTATION COMMISSION
105 WEST CAPITOL
JEFFERSON CITY, MO 65102
1-888-ASK-MODOT (1-888-275-6636)

MoDOT IMPROVE I-70 DB PROJECT 1

MILLSTONE WEBER

MO STATE CERTIFICATE OF AUTHORITY #001444 ENGINEERING

# General Notes

Design Specifications:

2020 AASHTO LRFD Bridge Design Specifications (9th Ed.)
Seismic Design Category = A

Design Loading:

Vehicular = HL-93
Future Wearing Surface = 35 lb/sf
Earth = 120 lb/cf,
Equivalent Fluid Pressure = 45 lb/cf (Min.)
Superstructure: Simply-Supported, Non-Composite for dead load.
Continuous Composite for live load.

Design Unit Stresses:

| | |
|---|---|
| Class B Concrete (Substructure) | f'c = 3,000 psi |
| Class B-1 Concrete (Barrier) | f'c = 4,000 psi |
| Class B-2 Concrete (Superstructure, except Prestressed Girders and Barrier) | f'c = 4,000 psi |
| Reinforcing Steel (ASTM A615 Grade 60) | fy = 60,000 psi |
| Structural Steel HP Pile (ASTM A709 Grade 50) | fy = 50,000 psi |

For precast prestressed panel stresses, see Sheet No. 16.
For prestressed girder stresses, see Sheet No. 13.

Neoprene Pads:

Laminated and plain neoprene bearing pads shall be 60 durometer and shall be in accordance with Sec 716.

Joint Filler:

All joint filler shall be in accordance with Sec 1057 for preformed sponge rubber expansion and partition joint filler, except as noted.

Reinforcing Steel:

Minimum clearance to reinforcing steel shall be 1-1/2", unless otherwise shown.

Minimum clearance between galvanized piles and uncoated (plain) reinforcing steel including bar supports shall be 1 1/2". Nylon, PVC, or polyethylene spacers shall be used to maintain clearance. Nylon cable ties shall be used to bind the spacers to the reinforcement.

Traffic Handling:

Vertical clearance for Route I-70 traffic during construction shall be 15'-6" minimum over a 24'-0" wide horizontal opening of the roadway in each direction.

Structure to be closed during construction. Traffic to be maintained on existing structure during roadway construction. See Seg4 MOT plans for traffic control.

Miscellaneous:

Construction personnel will indicate the type of joint filler option used under the precast panels for this structure:

- ☐ Constant Joint Filler
- ☐ Variable Joint Filler

## Foundation Data

| Design Data | | Bent Number 1 | Bent Number 2 | Bent Number 3 |
|---|---|---|---|---|
| Pile Type and Size | ea | HP 12x53 | HP 14x73 | HP 12x53 |
| Number | ea | 5 | 8 | 5 |
| Approximate Length Per Each | ft | 116 | 88 | 119 |
| Pile Point Reinforcement | ea | All | All | All |
| Min. Galvanized Penetration (Elev.) | ft | 814 | 809 | 814 |
| Minimum Tip Penetration (Elev.) | ft | 775 | 810 | 775 |
| Criteria for Min. Tip Penetration | ft | Minimize Post Construction Settlement | Lateral Stability | Minimize Post Construction Settlement |
| Approximate Prebore Depth per Each | ft | 55 | 20 | 55 |
| Approximate Prebore Length in Rock per Each | ft | - | - | - |
| Approximate Pile Tip (Elev.) | ft | 731 | 761 | 730 |
| Pile Driving Verification Method | | DF | DT | DF |
| Resistance Factor | | 0.4 | 0.65 | 0.4 |
| Minimum Nominal Axial Compressive Resistance | kip | 590 | 531 | 590 |

DF = FHWA-modified Gates Dynamic Pile Formula, and only used for nominal driving resisance less than 600 kips

DT = Dynamic Testing

$$\text{Minimum Nominal Axial Compressive Resistance} = \frac{\text{Maximum Factored Loads}}{\text{Resistance Factor}}$$

Pile point reinforcement need not be galvanized. Shop drawings will not be required for pile point reinforcement.

All piles shall be galvanized per Sec. 751.1.2.20.

The contractor shall make every effort to achieve the minimum galvanized penetration for all piles. Deviations in penetration less than 5 feet of the minimum will be considered acceptable provided the contractor makes the necessary corrections to ensure the minimum penetration is achieved on subsequent piles.

Due to proposed pile lengths, Delmag D30-32 hammer, or equivalent hammer with similar energy, is required for driving piles at this structure for both end bents and at the intermediate pier, through sand filled prebore hole.

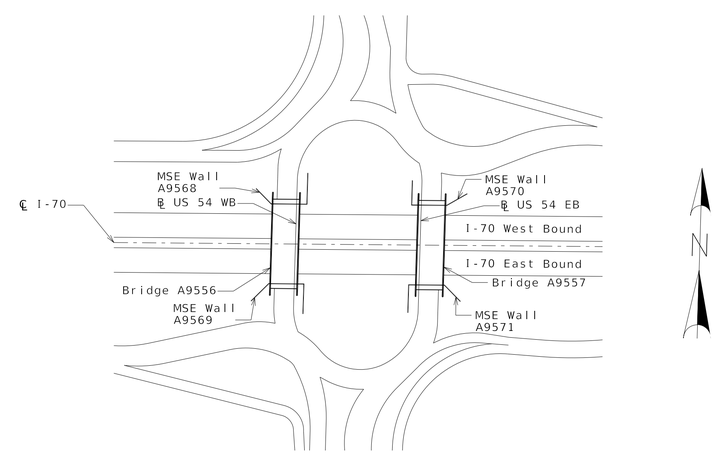


LOCATION SKETCH



STATE OF MISSOURI
OSMAN MOHAMMED
NUMBER PE-2021003145
PROFESSIONAL ENGINEER

02/20/2025 8:18:31 AM
Osman Mohammed
MO PE-2021003145

DATE PREPARED: 19-FEB-2025

| ROUTE | STATE |
|---|---|
| 54WB | MO |
| DISTRICT | SHEET NO. |
| BR | 2 |

COUNTY: CALLAWAY
JOB NO.: JST0021
CONTRACT ID.
PROJECT NO.
BRIDGE NO.: A9556

| DATE | DESCRIPTION |
|---|---|
| 01/21/2025 | REV. A - FINAL REVIEW |
| 02/19/2025 | REV. 0 - RELEASED FOR CONSTRUCTION |

MISSOURI HIGHWAYS AND TRANSPORTATION COMMISSION
105 WEST CAPITOL
JEFFERSON CITY, MO 65102
1-888-ASK-MODOT (1-888-275-6636)

MoDOT IMPROVE I-70 DB PROJECT 1

MILLSTONE WEBER

MO STATE CERTIFICATE OF AUTHORITY #001444 ENGINEERING

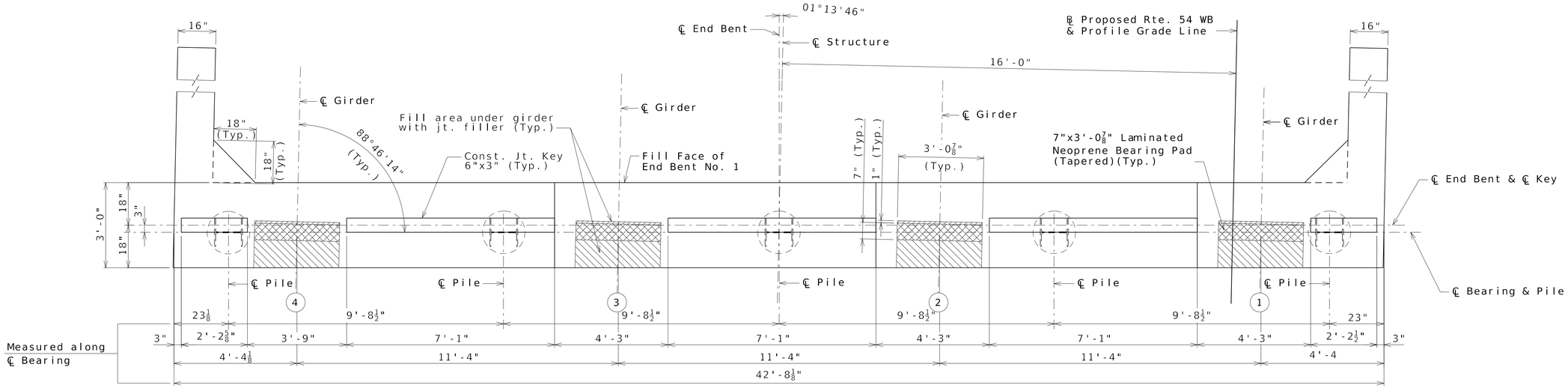


PLAN OF BEAM SHOWING DIMENSIONS

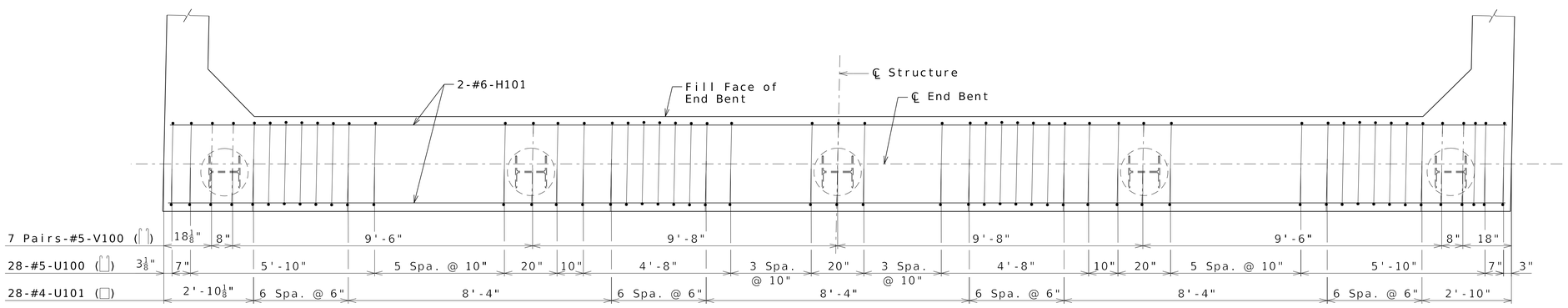


PLAN OF BEAM SHOWING REINFORCEMENT

(Key not shown for clarity)

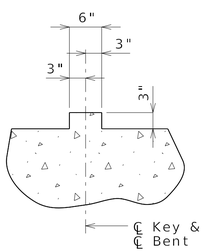


SECTION THRU KEY

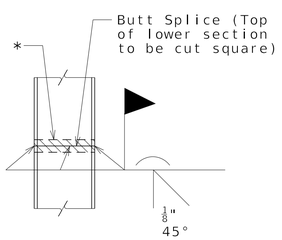


STEEL PILE SPLICE

(If required)

* Galvanizing material shall be omitted or removed one inch clear of weld locations in accordance with Sec 702.

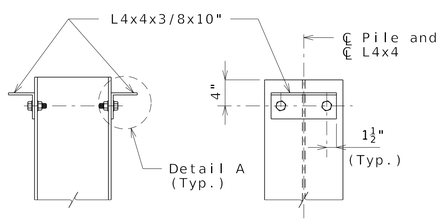


DETAILS OF HP PILE ANCHORS

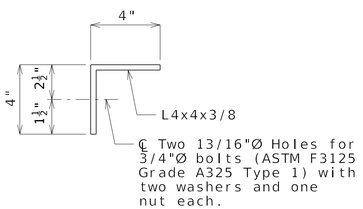


DETAIL A

Angles shall be coated with a minimum of two coats of non-aluminum epoxy mastic primer to provide a dry film thickness of 4 mils minimum, 8 mils maximum, or galvanized in accordance with Sec 1081. Bolts, washers and nuts shall be galvanized in accordance with AASHTO M 232 (ASTM A153), Class C.

General Notes:

For details of End Bent No. 1 not shown, see Sheets No. 4 & 5.

All U-bars and V-bars shall be placed parallel to ℄ Route 54 WB.

All vertical reinforcing bars in the substructure beams or caps shall be field adjusted to clear piles by at least 1½".

All Strands at end of girders shall be field bent or if necessary, cut in field to maintain 1½" minimum clearance to fill face of end bent.

All concrete in the end bent above top of beam and below top of slab shall be Class B-2.

For details of vertical drain at end bents, see Sheet No. 6.

For Details and Reinforcement of MoDOT Type D Barrier not shown, see Sheets No. 20-22.

For details of approach slab, see Sheet No. 23.

Reinforcement of wingwall not shown for clarity.

# DETAILS OF END BENT NO. 1

Detailed Aug 2024
Checked Dec 2024

Note: This drawing is not to scale. Follow dimensions.



STATE OF MISSOURI
OSMAN MOHAMMED
NUMBER PE-2021003145
PROFESSIONAL ENGINEER

02/20/2025 8:18:31 AM
Osman Mohammed
MO PE-2021003145

| DATE PREPARED | |
|---|---|
| 19-FEB-2025 | |
| ROUTE 54WB | STATE MO |
| DISTRICT BR | SHEET NO. 3 |
| COUNTY CALLAWAY | |
| JOB NO. JST0021 | |
| CONTRACT ID. | |
| PROJECT NO. | |
| BRIDGE NO. A9556 | |

| DATE | DESCRIPTION |
|---|---|
| 01/21/2025 | REV. A - FINAL REVIEW |
| 02/19/2025 | REV. 0 - RELEASED FOR CONSTRUCTION |

MISSOURI HIGHWAYS AND TRANSPORTATION COMMISSION
105 WEST CAPITOL
JEFFERSON CITY, MO 65102
1-888-ASK-MODOT (1-888-275-6636)

MoDOT IMPROVE I-70 DB PROJECT 1

MILLSTONE WEBER

MO STATE CERTIFICATE OF AUTHORITY #001444 ENGINEERING

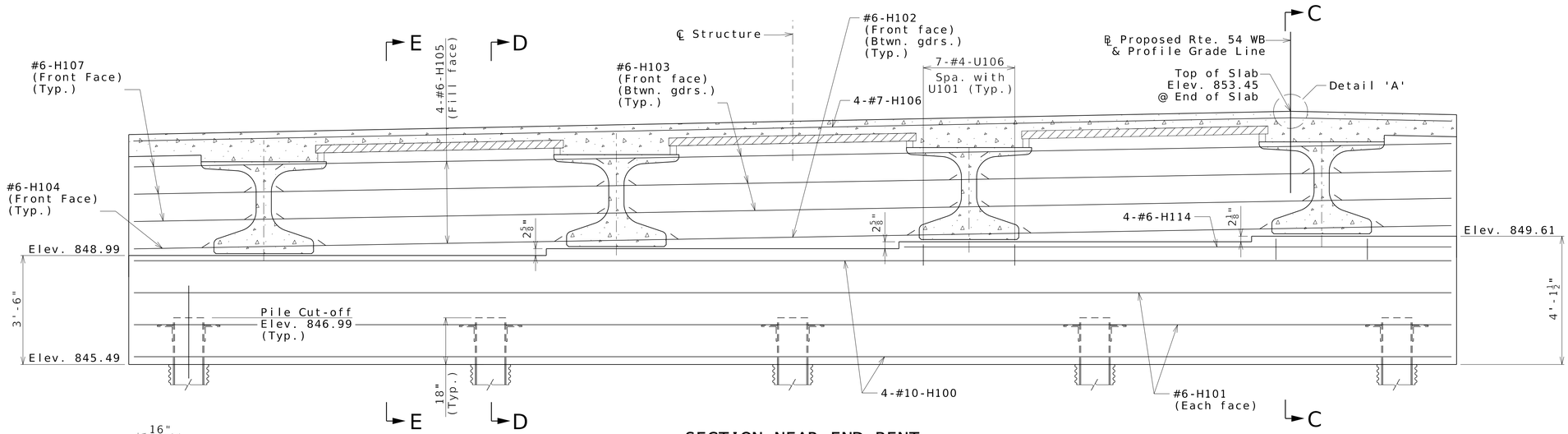


## SECTION NEAR END BENT

(Looking Back Station)

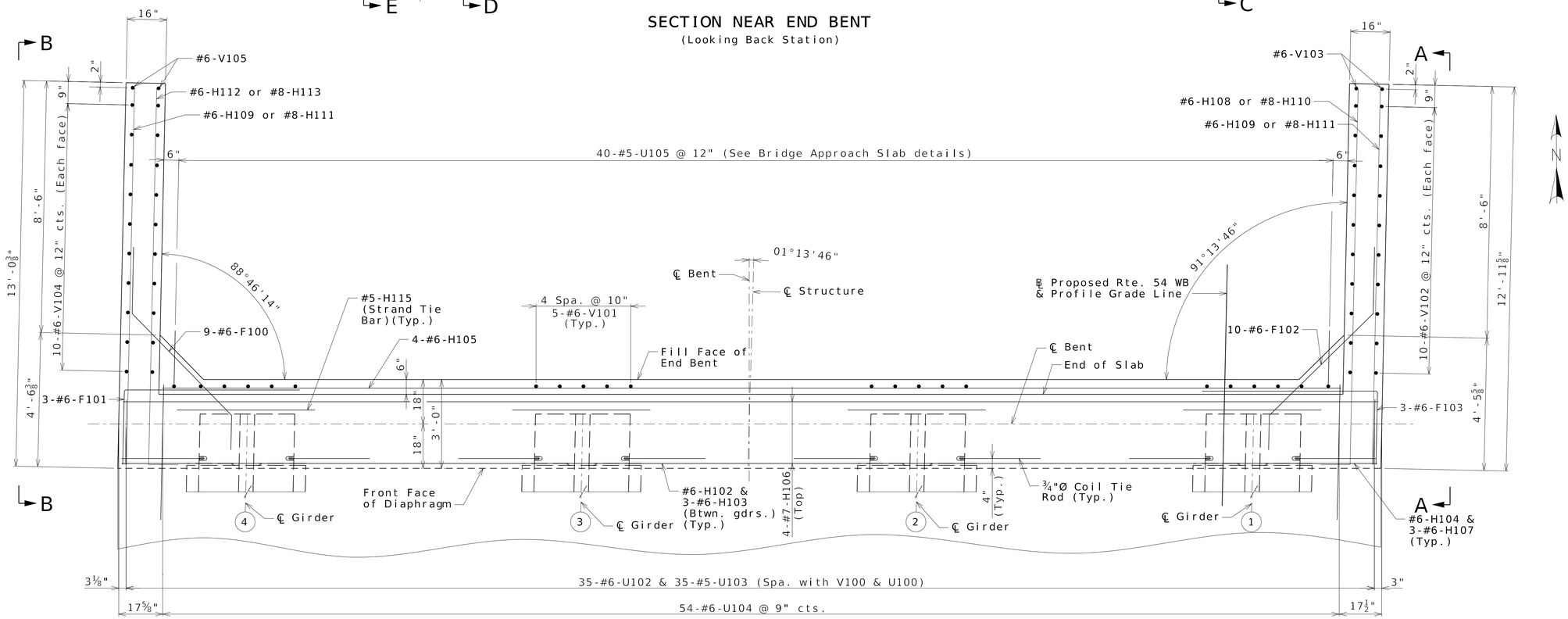


## PART PLAN

Notes:

For details of End Bent No. 1 not shown, see Sheets No. 3 & 5.

For Elevations A-A & B-B & Sections C-C, D-D & E-E, see Sheet No. 5.

For Detail 'A', see Sheet No. 19.

For location of Coil Tie Rods and #5-H115 (Strand Tie Bar), see Sheet No. 3.

The #6-F bars shall be bent in the field to clear girders if required.

For girder spacing, see Sheet No. 3.

# DETAILS OF END BENT NO. 1

Detailed Aug 2024
Checked Dec 2024

Note: This drawing is not to scale. Follow dimensions.



STATE OF MISSOURI
OSMAN MOHAMMED
NUMBER PE-2021003145
PROFESSIONAL ENGINEER

02/20/2025 8:18:31 AM
Osman Mohammed
MO PE-2021003145

| | |
|---|---|
| DATE PREPARED | 19-FEB-2025 |
| ROUTE | 54WB |
| STATE | MO |
| DISTRICT | BR |
| SHEET NO. | 4 |
| COUNTY | CALLAWAY |
| JOB NO. | JST0021 |
| CONTRACT ID. | |
| PROJECT NO. | |
| BRIDGE NO. | A9556 |

| DATE | DESCRIPTION |
|---|---|
| 01/21/2025 | REV. A - FINAL REVIEW |
| 02/19/2025 | REV. 0 - RELEASED FOR CONSTRUCTION |

MISSOURI HIGHWAYS AND TRANSPORTATION COMMISSION
105 WEST CAPITOL
JEFFERSON CITY, MO 65102
1-888-ASK-MODOT (1-888-275-6636)

MoDOT IMPROVE I-70 DB PROJECT 1

MILLSTONE WEBER

MO STATE CERTIFICATE OF AUTHORITY #001444 ENGINEERING

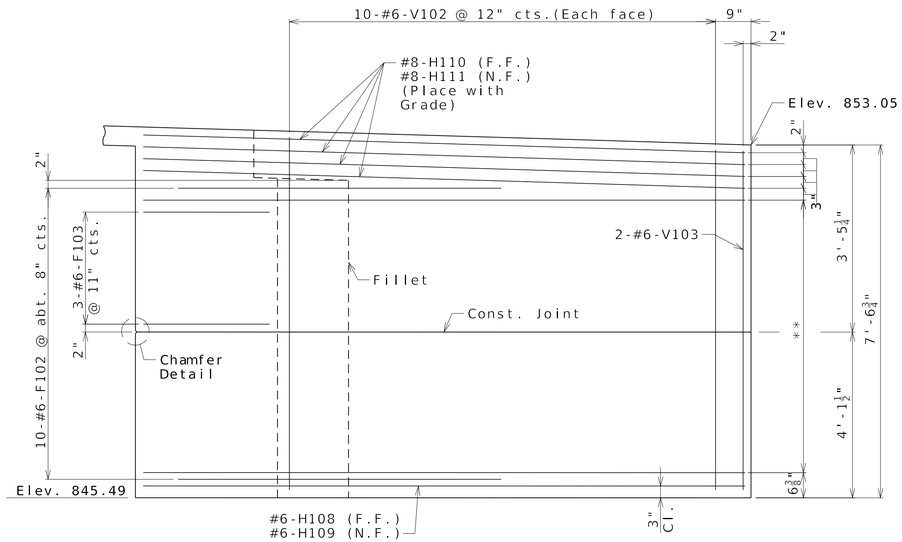


## ELEVATION A-A

** 10-#6-H108 @ abt. 8" cts. (F.F.)
10-#6-H109 @ abt. 8" cts. (N.F.)

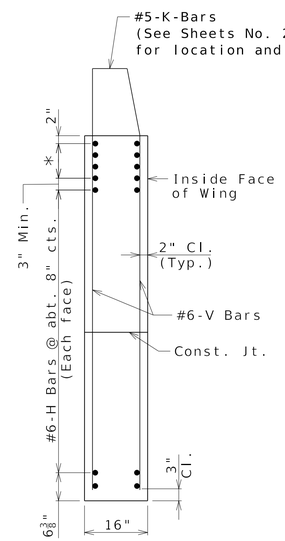


## TYPICAL SECTION THRU WING

* 4-#8-H Bars at 3" cts. (Each face)(Place with grade)

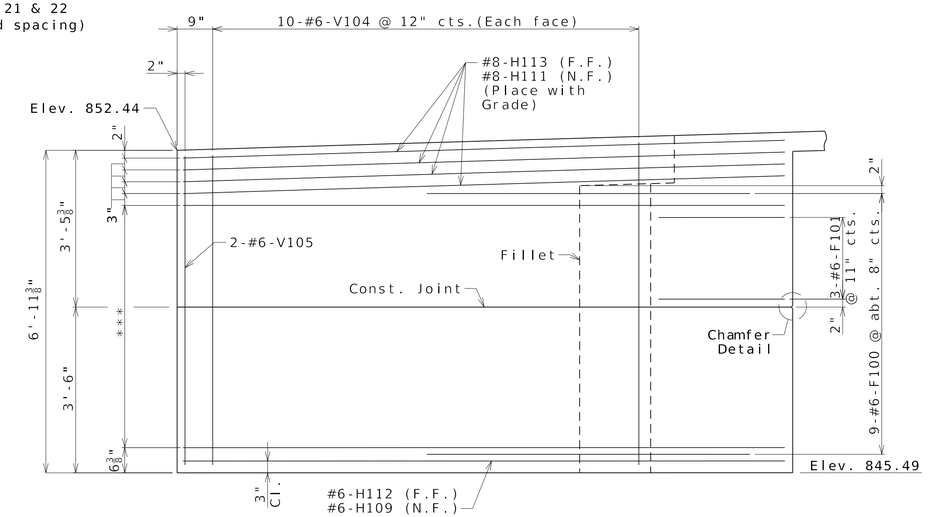


## ELEVATION B-B

*** 9-#6-H112 @ abt. 8" cts. (F.F.)
9-#6-H109 @ abt. 8" cts. (N.F.)

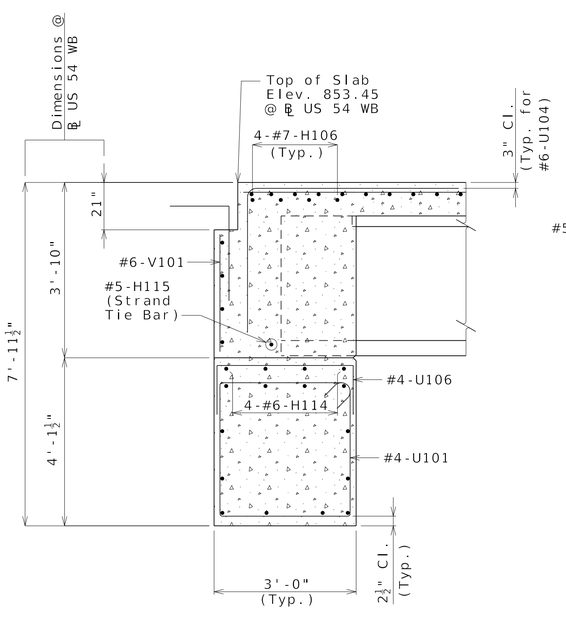


## SECTION C-C

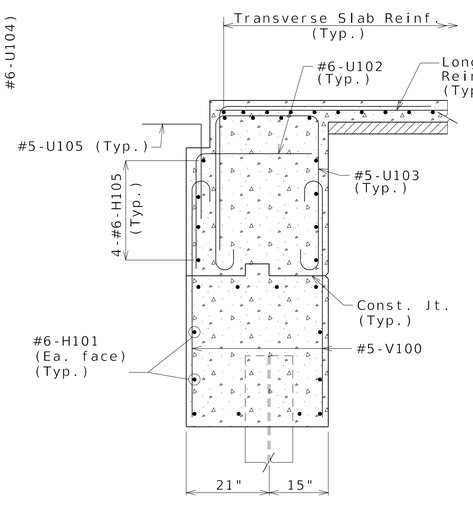


## SECTION D-D

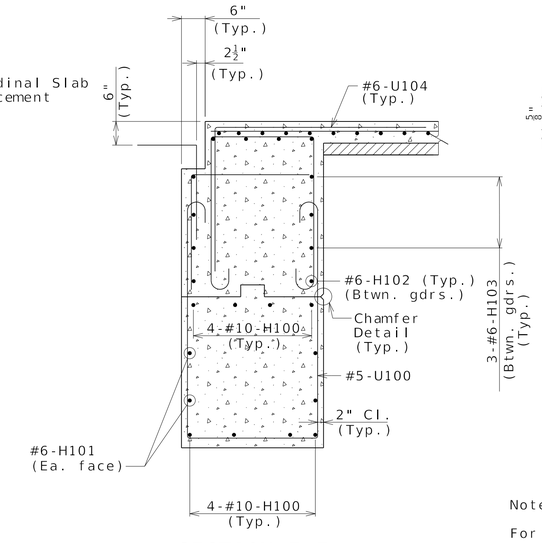


## SECTION E-E

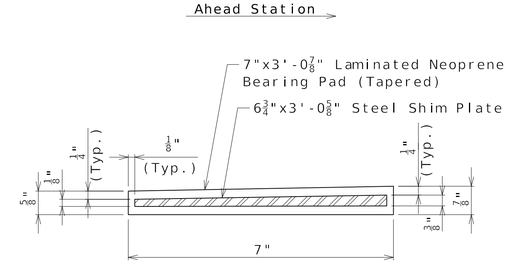


## SECTION THRU LAMINATED NEOPRENE BEARING PAD

4 Required at End Bent No. 1

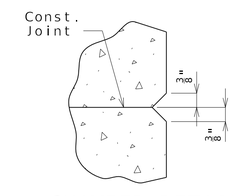


## CHAMFER DETAIL

Notes:

For location of Elevations A-A and B-B, see Sheet No. 4.

Work this sheet with Sheets No. 3 & 4.

# DETAILS OF END BENT NO. 1

Detailed Aug 2024
Checked Dec 2024

Note: This drawing is not to scale. Follow dimensions.



STATE OF MISSOURI
OSMAN MOHAMMED
NUMBER PE-2021003145
PROFESSIONAL ENGINEER

02/20/2025 8:18:31 AM
Osman Mohammed
MO PE-2021003145

| DATE PREPARED | |
|---|---|
| 19-FEB-2025 | |
| ROUTE 54WB | STATE MO |
| DISTRICT BR | SHEET NO. 5 |
| COUNTY CALLAWAY | |
| JOB NO. JST0021 | |
| CONTRACT ID. | |
| PROJECT NO. | |
| BRIDGE NO. A9556 | |

| DATE | DESCRIPTION |
|---|---|
| 01/21/2025 | REV. A - FINAL REVIEW |
| 02/19/2025 | REV. 0 - RELEASED FOR CONSTRUCTION |

MISSOURI HIGHWAYS AND TRANSPORTATION COMMISSION
105 WEST CAPITOL
JEFFERSON CITY, MO 65102
1-888-ASK-MODOT (1-888-275-6636)

MoDOT IMPROVE I-70 DB PROJECT 1

MILLSTONE WEBER

MO STATE CERTIFICATE OF AUTHORITY #001444 ENGINEERING

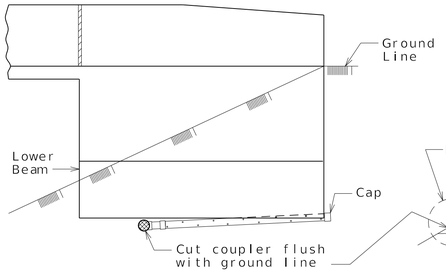


ELEVATION OF WING

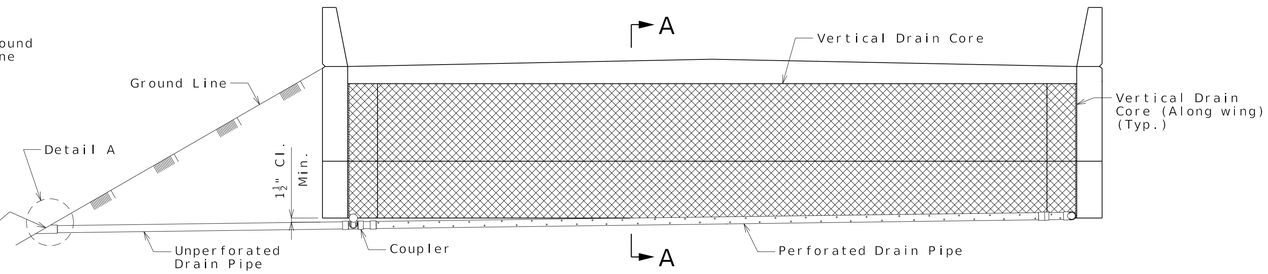


ELEVATION OF END BENT

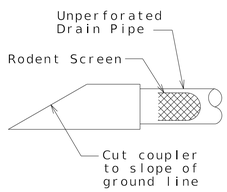


DETAIL A

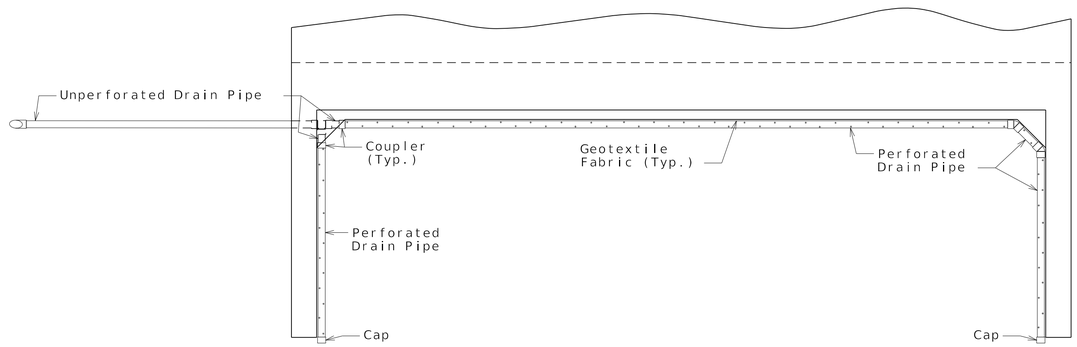


PLAN OF END BENT

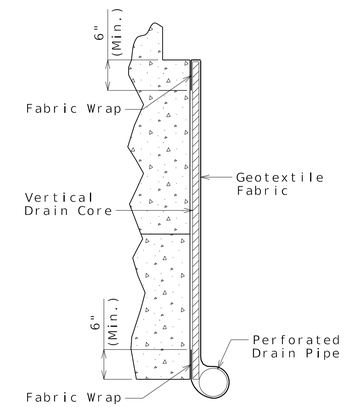


PART SECTION A-A

(Section thru wing similar)

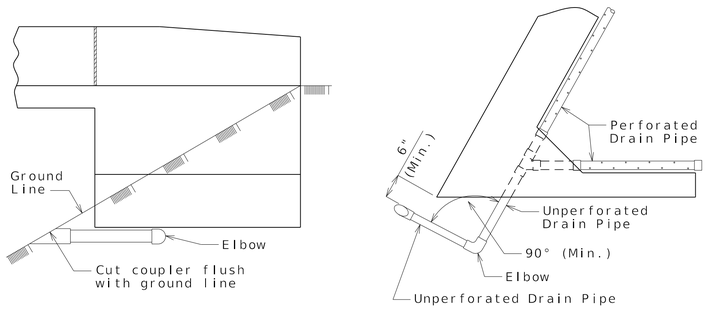


ELEVATION OF WING

PART PLAN

OPTIONAL TURNED DRAIN

(Use only when straight drain is not practical.)

## General Notes:

All drain pipe shall be sloped 1 to 2 percent.

Drain pipe may be either 6-inch diameter corrugated metallic-coated steel pipe underdrain, 4-inch diameter corrugated polyvinyl chloride (PVC) drain pipe, or 4-inch diameter corrugated polyethylene (PE) drain pipe.

Drain pipe shall be placed at fill face of end bent and inside face of wings. The pipe shall slope to lowest grade of ground line, also missing the lower beam of end bent by a minimum of 1 1/2 inches.

Perforated pipe shall be placed at fill face side and inside face of wings at the bottom of end bent and plain pipe shall be used where the vertical drain ends to the exit at ground line.

# VERTICAL DRAIN AT END BENTS

(Squared end bent shown, skewed end bent similar)

Detailed Aug 2024
Checked Dec 2024

Note: This drawing is not to scale. Follow dimensions.



STATE OF MISSOURI
OSMAN MOHAMMED
NUMBER PE-2021003145
PROFESSIONAL ENGINEER

02/20/2025 8:18:31 AM
Osman Mohammed
MO PE-2021003145

| | |
|---|---|
| DATE PREPARED | 19-FEB-2025 |
| ROUTE | 54WB |
| STATE | MO |
| DISTRICT | BR |
| SHEET NO. | 6 |
| COUNTY | CALLAWAY |
| JOB NO. | JST0021 |
| CONTRACT ID. | |
| PROJECT NO. | |
| BRIDGE NO. | A9556 |

| DATE | DESCRIPTION |
|---|---|
| 01/21/2025 | REV. A - FINAL REVIEW |
| 02/19/2025 | REV. 0 - RELEASED FOR CONSTRUCTION |

MISSOURI HIGHWAYS AND TRANSPORTATION COMMISSION
105 WEST CAPITOL
JEFFERSON CITY, MO 65102
1-888-ASK-MODOT (1-888-275-6636)

MoDOT IMPROVE I-70 DB PROJECT 1

MILLSTONE WEBER

MO STATE CERTIFICATE OF AUTHORITY #001444 ENGINEERING

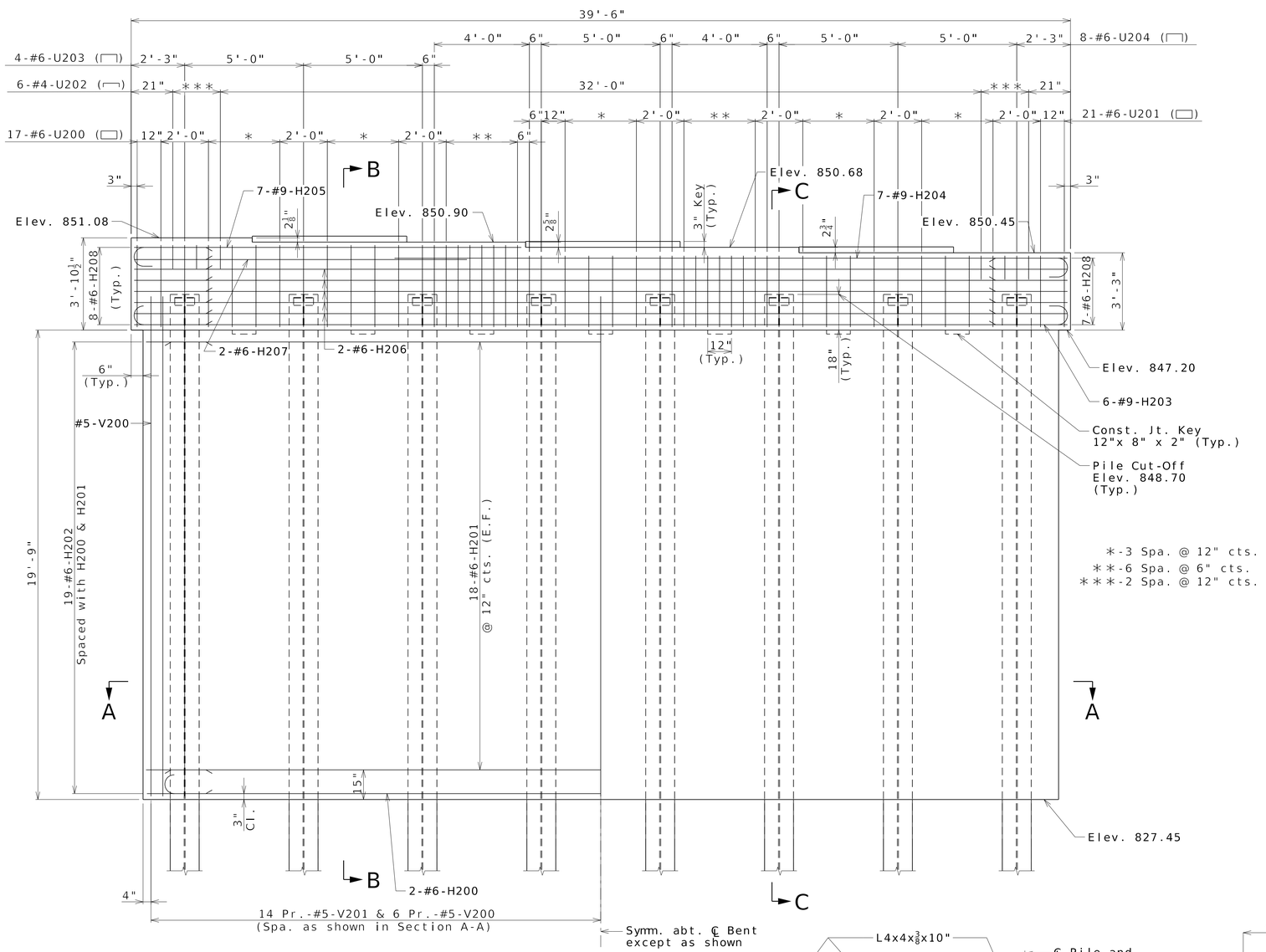


ELEVATION
(Looking Upstation)

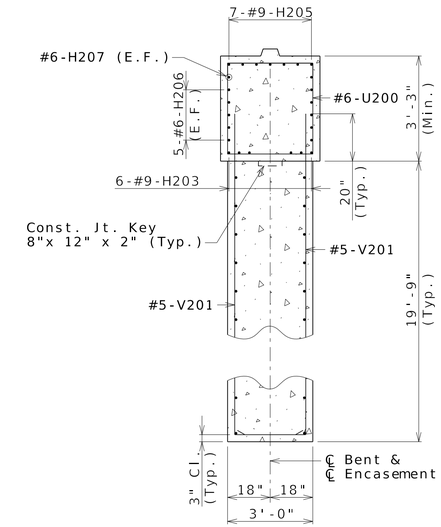


SECTION B-B

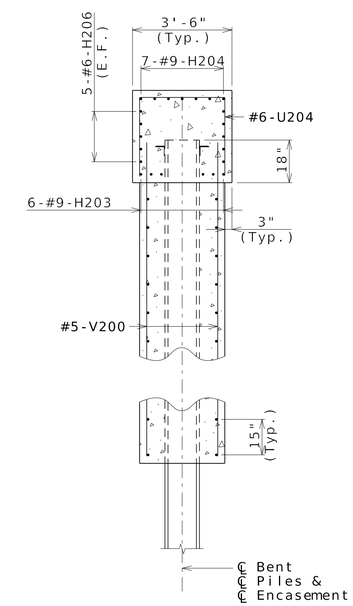


SECTION C-C

Notes:

For Section A-A not shown, see Sheet No. 8.

Work this Sheet No. 8 & 9.

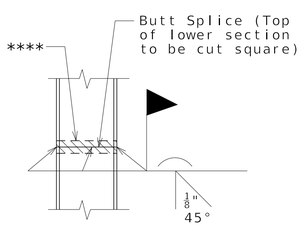


STEEL PILE SPLICE
(If required)

**** Galvanizing material shall be omitted or removed one inch clear of weld locations in accordance with Sec 702.

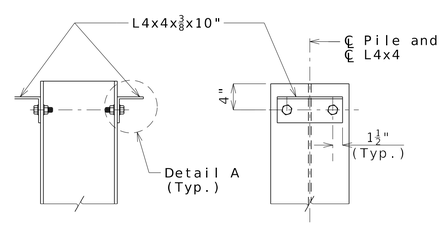


DETAILS OF HP PILE ANCHORS

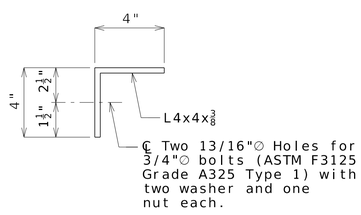


DETAIL A

Angles shall be coated with a minimum of two coats of non-aluminum epoxy mastic primer to provide a dry film thickness of 4 mils minimum, 8 mils maximum, or galvanized in accordance with Sec 1081. Bolts, washers and nuts shall be galvanized in accordance with AASHTO M 232 (ASTM A153), Class C.

# DETAILS OF INTERMEDIATE BENT NO. 2

Detailed Aug 2024
Checked Dec 2024

Note: This drawing is not to scale. Follow dimensions.



STATE OF MISSOURI
OSMAN MOHAMMED
NUMBER PE-2021003145
PROFESSIONAL ENGINEER

02/20/2025 8:18:32 AM
Osman Mohammed
MO PE-2021003145

| DATE PREPARED | |
|---|---|
| 19-FEB-2025 | |
| ROUTE 54WB | STATE MO |
| DISTRICT BR | SHEET NO. 7 |
| COUNTY CALLAWAY | |
| JOB NO. JST0021 | |
| CONTRACT ID. | |
| PROJECT NO. | |
| BRIDGE NO. A9556 | |

| DATE | DESCRIPTION |
|---|---|
| 01/21/2025 | REV. A - FINAL REVIEW |
| 02/19/2025 | REV. 0 - RELEASED FOR CONSTRUCTION |

MISSOURI HIGHWAYS AND TRANSPORTATION COMMISSION
105 WEST CAPITOL
JEFFERSON CITY, MO 65102
1-888-ASK-MODOT (1-888-275-6636)

MoDOT IMPROVE I-70 DB PROJECT 1

MILLSTONE WEBER

MO STATE CERTIFICATE OF AUTHORITY #001444 ENGINEERING

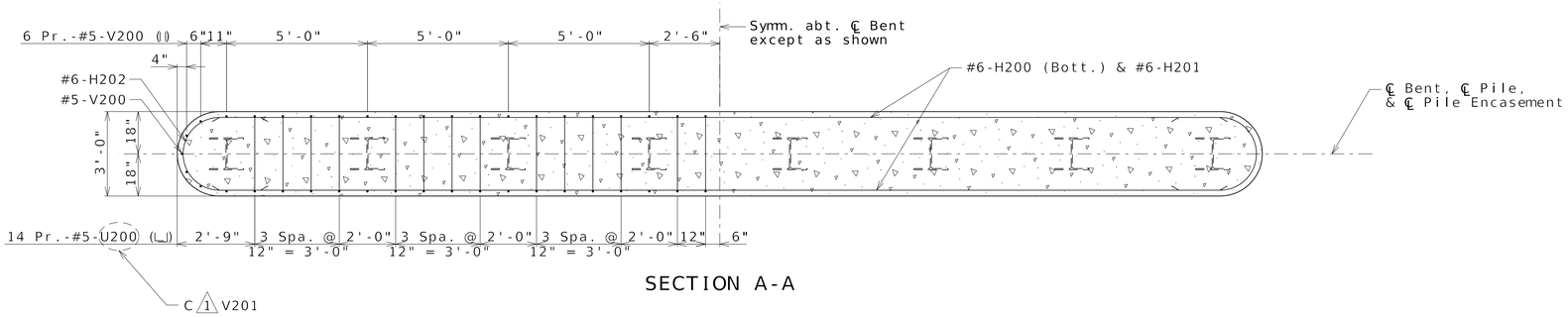


SECTION A-A

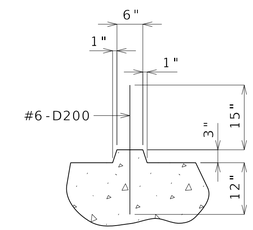


SECTION THRU KEY

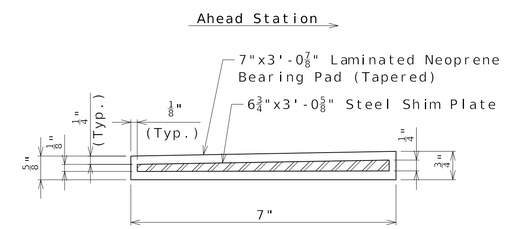


SECTION THRU LAMINATED NEOPRENE BEARING PAD

4 Required at Intermediate Bent No. 2 (Back)
4 Required at Intermediate Bent No. 2 (Ahead)

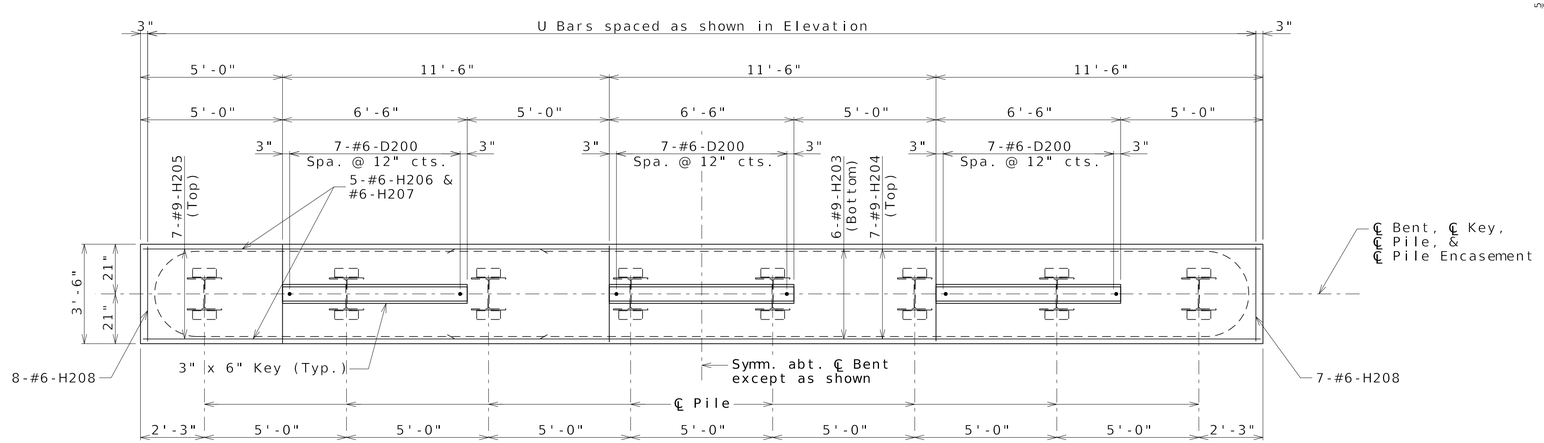


PLAN SHOWING REINFORCEMENT

Notes:

For the location of Section A-A, see Sheet No. 7.

For Intermediate Bent Details not shown, see Sheets No. 7 & 9.

C 1 REVISED 03-14-2025

# DETAILS OF INTERMEDIATE BENT NO. 2

Detailed Aug 2024
Checked Dec 2024

Note: This drawing is not to scale. Follow dimensions.



STATE OF MISSOURI
OSMAN MOHAMMED
NUMBER PE-2021003145
PROFESSIONAL ENGINEER

03/14/2025 2:26:22 PM
Osman Mohammed
MO PE-2021003145

| DATE PREPARED | |
|---|---|
| 14-MAR-2025 | |
| ROUTE 54WB | STATE MO |
| DISTRICT BR | SHEET NO. 8 |
| COUNTY CALLAWAY | |
| JOB NO. JST0021 | |
| CONTRACT ID. | |
| PROJECT NO. | |
| BRIDGE NO. A9556 | |

| DATE | DESCRIPTION |
|---|---|
| 01/21/2025 | REV. A - FINAL REVIEW |
| 02/19/2025 | REV. 0 - RELEASED FOR CONSTRUCTION |
| 03/14/2025 | REV. 1 - NDC-013 - REVISED BAR MARK |

MISSOURI HIGHWAYS AND TRANSPORTATION COMMISSION
105 WEST CAPITOL
JEFFERSON CITY, MO 65102
1-888-ASK-MODOT (1-888-275-6636)

MoDOT IMPROVE I-70 DB PROJECT 1

MILLSTONE WEBER

MO STATE CERTIFICATE OF AUTHORITY #001444 ENGINEERING

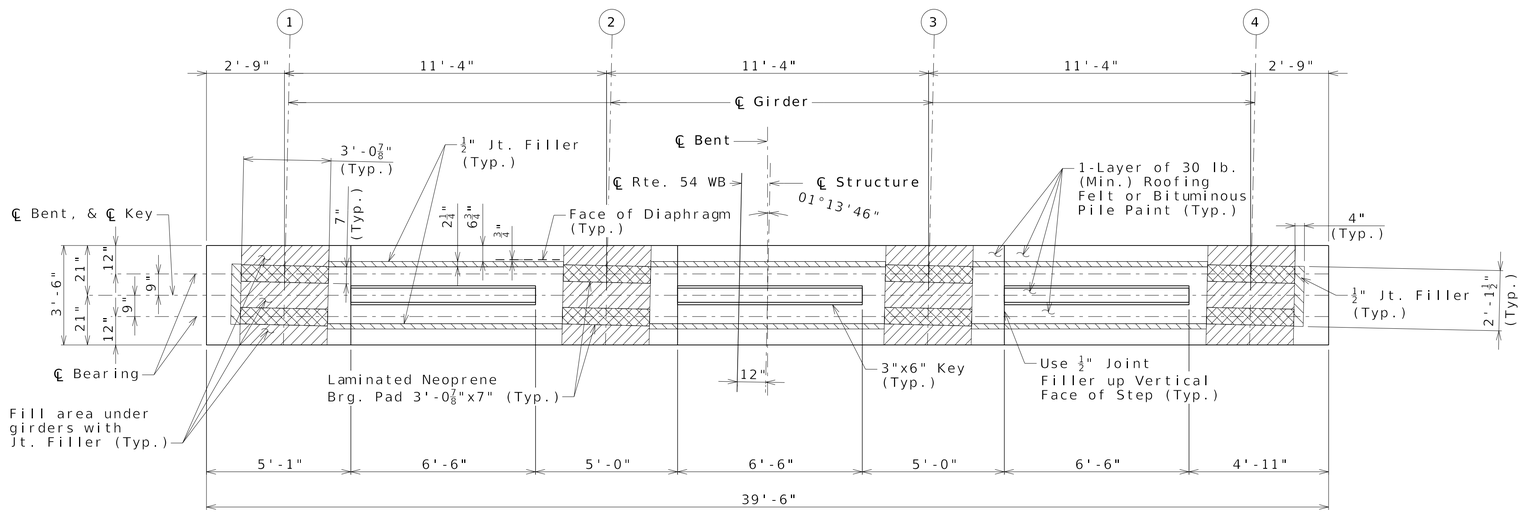


PLAN OF BEAM

Notes:

For steps 2" or more, use $2\frac{1}{4}$" x $\frac{1}{2}$" joint filler up vertical face.

For details of Intermediate Bent not shown, see Sheets No. 7 & 8.

For details of Concrete Diaphragm, see Sheet No. 15.

For details of Laminated Neoprene Bearing Pads, see Sheet No. 8.

# DETAILS OF INTERMEDIATE BENT NO. 2

Detailed Aug 2024
Checked Dec 2024

Note: This drawing is not to scale. Follow dimensions.



STATE OF MISSOURI
OSMAN MOHAMMED
NUMBER PE-2021003145
PROFESSIONAL ENGINEER

02/20/2025 8:18:32 AM
Osman Mohammed
MO PE-2021003145

| | |
|---|---|
| DATE PREPARED | 19-FEB-2025 |
| ROUTE | 54WB |
| STATE | MO |
| DISTRICT | BR |
| SHEET NO. | 9 |
| COUNTY | CALLAWAY |
| JOB NO. | JST0021 |
| CONTRACT ID. | |
| PROJECT NO. | |
| BRIDGE NO. | A9556 |

| DATE | DESCRIPTION |
|---|---|
| 01/21/2025 | REV. A - FINAL REVIEW |
| 02/19/2025 | REV. 0 - RELEASED FOR CONSTRUCTION |

MISSOURI HIGHWAYS AND TRANSPORTATION COMMISSION
105 WEST CAPITOL
JEFFERSON CITY, MO 65102
1-888-ASK-MODOT (1-888-275-6636)

MoDOT IMPROVE I-70 DB PROJECT 1

MILLSTONE WEBER

MO STATE CERTIFICATE OF AUTHORITY #001444 ENGINEERING

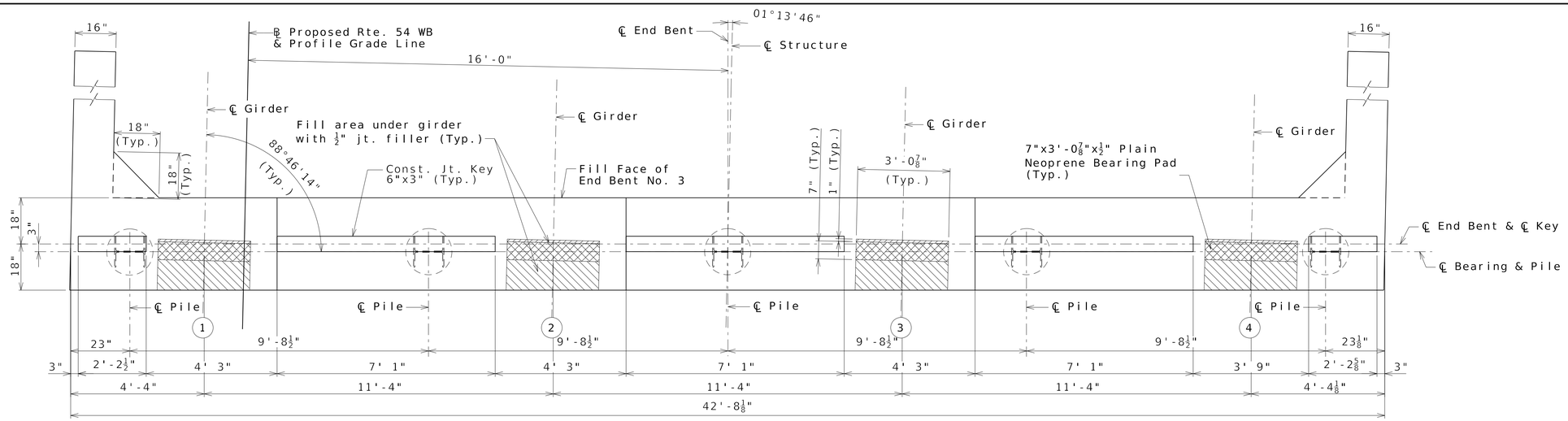


## PLAN OF BEAM SHOWING DIMENSIONS

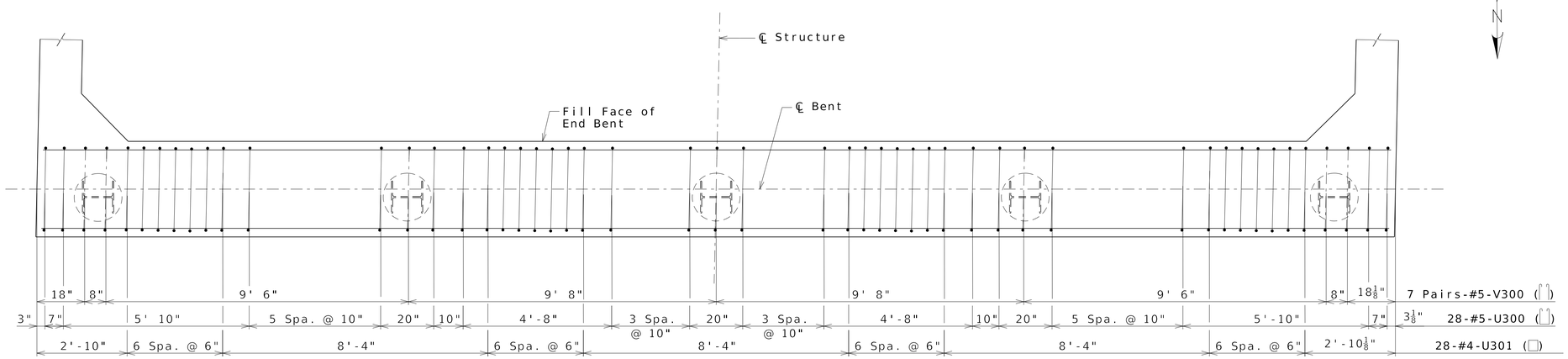


## PLAN OF BEAM SHOWING REINFORCEMENT

(Key not shown for clarity)

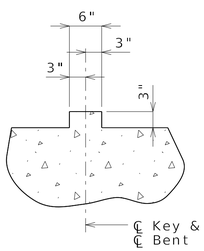


## SECTION THRU KEY

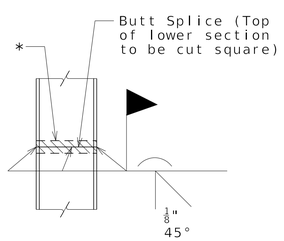


## STEEL PILE SPLICE

(If required)

* Galvanizing material shall be omitted or removed one inch clear of weld locations in accordance with Sec 702.

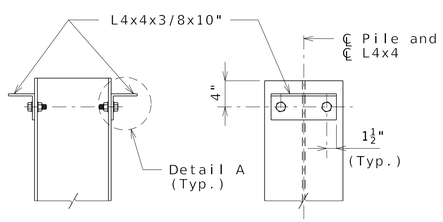


## DETAILS OF HP PILE ANCHORS

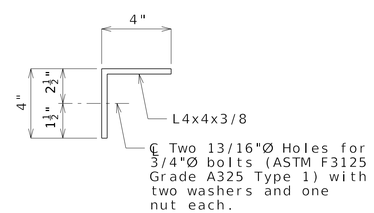


## DETAIL A

Angles shall be coated with a minimum of two coats of non-aluminum epoxy mastic primer to provide a dry film thickness of 4 mils minimum, 8 mils maximum, or galvanized in accordance with Sec 1081. Bolts, washers and nuts shall be galvanized in accordance with AASHTO M 232 (ASTM A153), Class C.

General Notes:

For details of End Bent No. 3 not shown, see Sheets No. 11 & 12.

All U-bars and V-bars shall be placed parallel to ℄ Route 54 WB.

All vertical reinforcing bars in the substructure beams or caps shall be field adjusted to clear piles by at least 1½".

All Strands at end of girders shall be field bent or if necessary, cut in field to maintain 1½" minimum clearance to fill face of end bent.

All concrete in the end bent above top of beam and below top of slab shall be Class B-2.

For details of vertical drain at end bents, see Sheet No. 6.

For Details and Reinforcement of MoDOT Type D Barrier not shown, see Sheets No. 20-22.

For details of approach slab, see Sheet No. 23.

Reinforcement of wingwall not shown for clarity.

# DETAILS OF END BENT NO. 3

Detailed Aug 2024
Checked Dec 2024

Note: This drawing is not to scale. Follow dimensions.



STATE OF MISSOURI
OSMAN MOHAMMED
NUMBER PE-2021003145
PROFESSIONAL ENGINEER

02/20/2025 8:18:32 AM
Osman Mohammed
MO PE-2021003145

| DATE PREPARED | |
|---|---|
| 19-FEB-2025 | |
| ROUTE 54WB | STATE MO |
| DISTRICT BR | SHEET NO. 10 |
| COUNTY CALLAWAY | |
| JOB NO. JST0021 | |
| CONTRACT ID. | |
| PROJECT NO. | |
| BRIDGE NO. A9556 | |

| DATE | DESCRIPTION |
|---|---|
| 01/21/2025 | REV. A - FINAL REVIEW |
| 02/19/2025 | REV. 0 - RELEASED FOR CONSTRUCTION |

MISSOURI HIGHWAYS AND TRANSPORTATION COMMISSION
105 WEST CAPITOL
JEFFERSON CITY, MO 65102
1-888-ASK-MODOT (1-888-275-6636)

MoDOT IMPROVE I-70 DB PROJECT 1

MILLSTONE WEBER

MO STATE CERTIFICATE OF AUTHORITY #001444 ENGINEERING

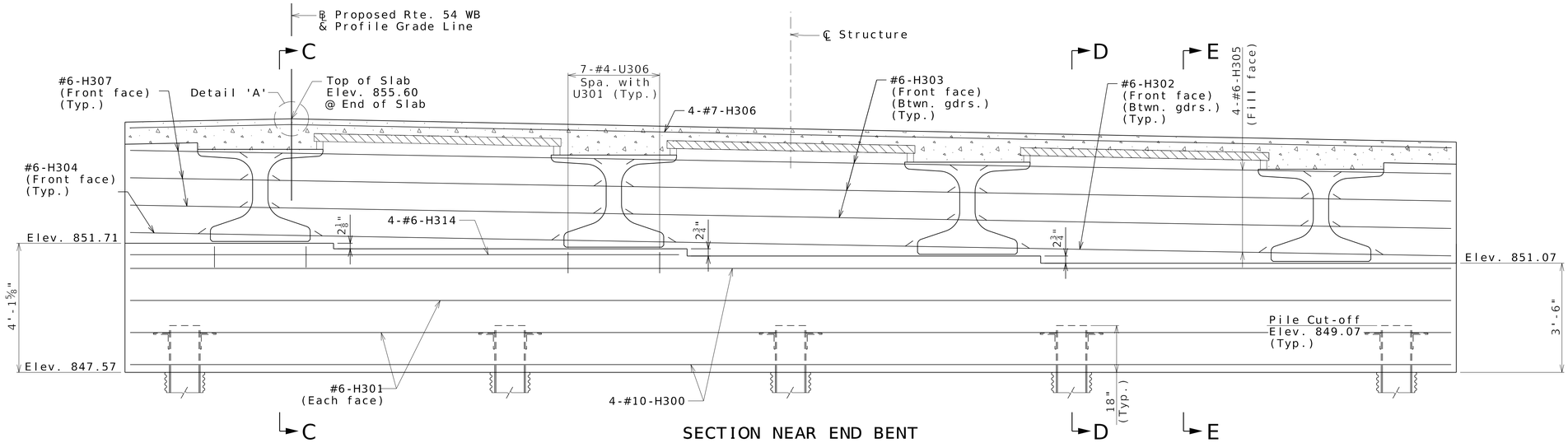


## SECTION NEAR END BENT

(Looking Ahead Station)

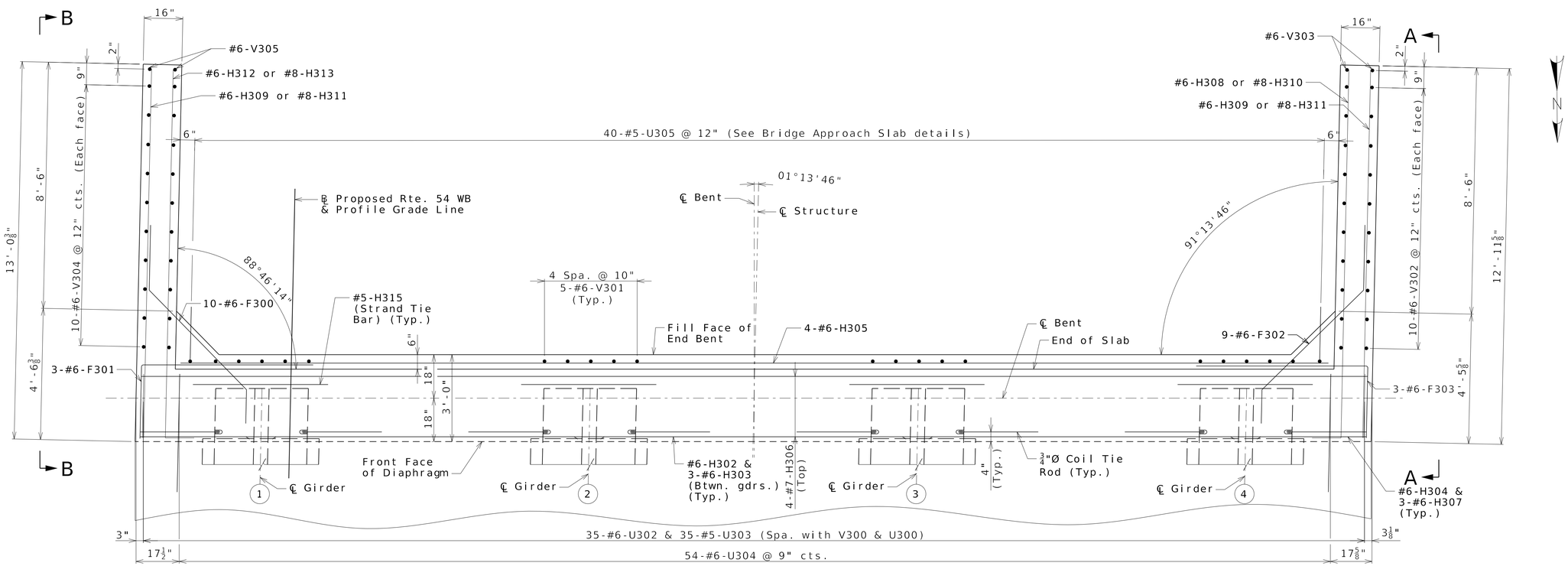


## PART PLAN

Notes:

For details of End Bent No. 3 not shown, see Sheets No. 10 & 12.

For Elevations A-A, B-B, and Sections C-C, D-D & E-E, see Sheet No. 12.

For Detail 'A', see Sheet No. 19.

For location of Coil Tie Rods and #5-H315 (Strand Tie Bar), see Sheet No. 10.

The #6-F bars shall be bent in the field to clear girders if required.

# DETAILS OF END BENT NO. 3

Detailed Aug 2024
Checked Dec 2024

Note: This drawing is not to scale. Follow dimensions.



STATE OF MISSOURI
OSMAN MOHAMMED
NUMBER PE-2021003145
PROFESSIONAL ENGINEER

02/20/2025 8:18:32 AM
Osman Mohammed
MO PE-2021003145

| DATE PREPARED | |
|---|---|
| 19-FEB-2025 | |
| ROUTE | STATE |
| 54WB | MO |
| DISTRICT | SHEET NO. |
| BR | 11 |
| COUNTY | |
| CALLAWAY | |
| JOB NO. | |
| JST0021 | |
| CONTRACT ID. | |
| PROJECT NO. | |
| BRIDGE NO. | |
| A9556 | |

| DATE | DESCRIPTION |
|---|---|
| 01/21/2025 | REV. A - FINAL REVIEW |
| 02/19/2025 | REV. 0 - RELEASED FOR CONSTRUCTION |

MISSOURI HIGHWAYS AND TRANSPORTATION COMMISSION
105 WEST CAPITOL
JEFFERSON CITY, MO 65102
1-888-ASK-MODOT (1-888-275-6636)

MoDOT IMPROVE I-70 DB PROJECT 1

MILLSTONE WEBER

MO STATE CERTIFICATE OF AUTHORITY #001444 ENGINEERING

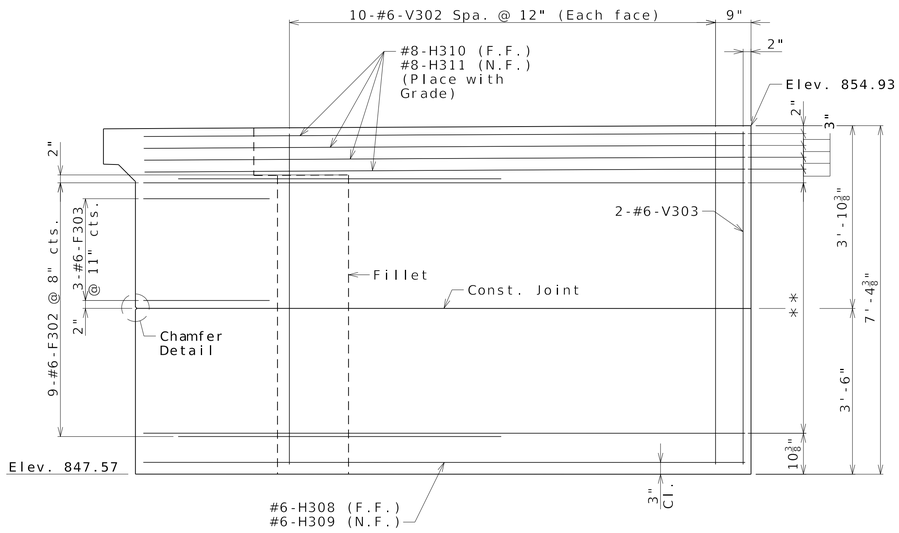


## ELEVATION A-A

** 9-#6-H308 @ 8" cts. (F.F.)
9-#6-H309 @ 8" cts. (N.F.)

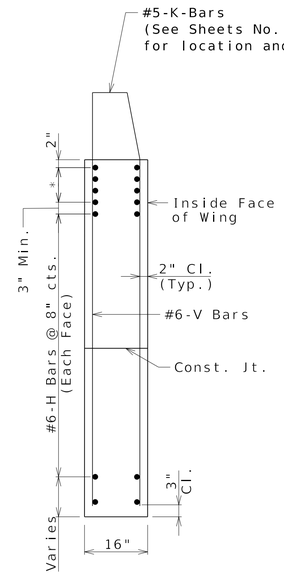


## TYPICAL SECTION THRU WING

* #8-H Bars at 3" cts.
(Each face)(Place with grade)

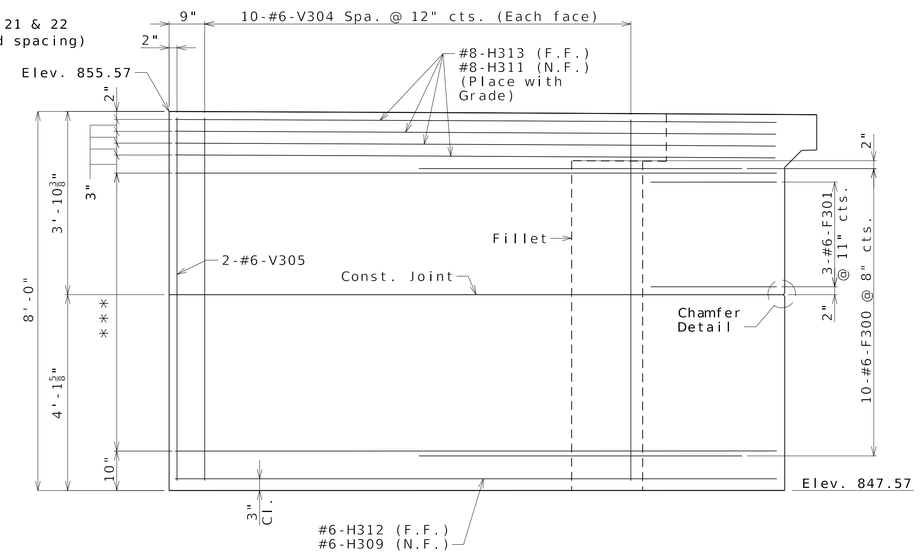


## ELEVATION B-B

*** 10-#6-H312 @ 8" cts. (F.F.)
10-#6-H309 @ 8" cts. (N.F.)

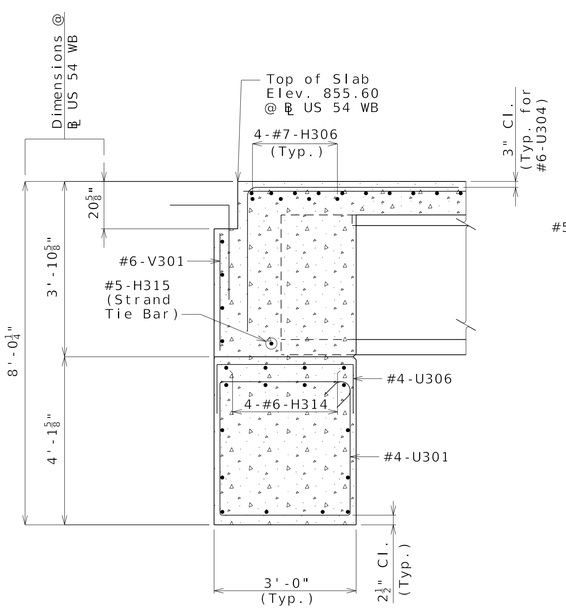


## SECTION C-C

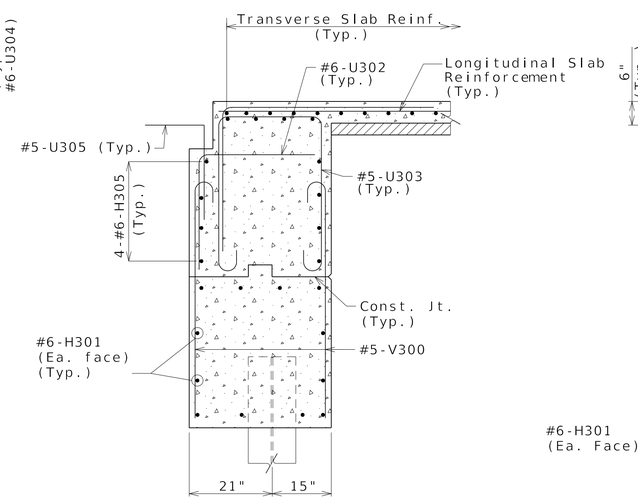


## SECTION D-D

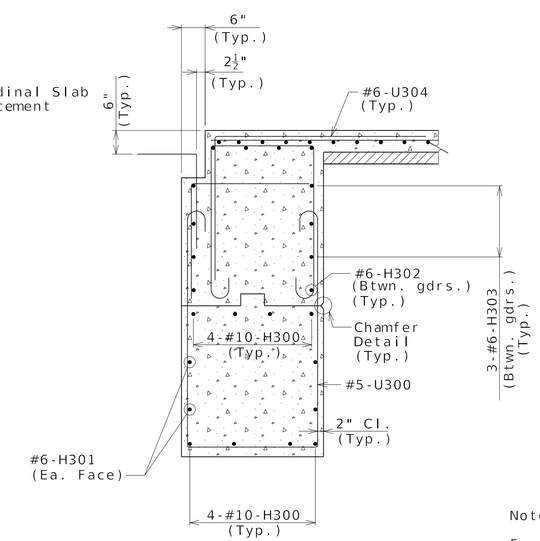


## SECTION E-E

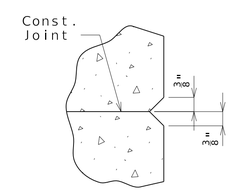


## CHAMFER DETAIL

Notes:

For location of Elevations A-A and B-B, see Sheet No. 11.

Work this sheet with Sheets No. 10 & 11.

# DETAILS OF END BENT NO. 3

Detailed Aug 2024
Checked Dec 2024

Note: This drawing is not to scale. Follow dimensions.



STATE OF MISSOURI
OSMAN MOHAMMED
NUMBER PE-2021003145
PROFESSIONAL ENGINEER

02/20/2025 8:18:32 AM
Osman Mohammed
MO PE-2021003145

| DATE PREPARED | |
|---|---|
| 19-FEB-2025 | |
| ROUTE 54WB | STATE MO |
| DISTRICT BR | SHEET NO. 12 |
| COUNTY CALLAWAY | |
| JOB NO. JST0021 | |
| CONTRACT ID. | |
| PROJECT NO. | |
| BRIDGE NO. A9556 | |

| DATE | DESCRIPTION |
|---|---|
| 01/21/2025 | REV. A - FINAL REVIEW |
| 02/19/2025 | REV. 0 - RELEASED FOR CONSTRUCTION |

MISSOURI HIGHWAYS AND TRANSPORTATION COMMISSION
105 WEST CAPITOL
JEFFERSON CITY, MO 65102
1-888-ASK-MODOT (1-888-275-6636)

MoDOT IMPROVE I-70 DB PROJECT 1

MILLSTONE WEBER

MO STATE CERTIFICATE OF AUTHORITY #001444 ENGINEERING

(1) Fabricator shall apply a bond breaker to this region excluding where joint filler will be applied.

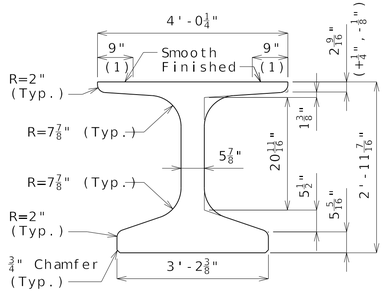


DIMENSIONS

(2) Outer strands tensioned to 2.02 kips/strand and inner strands to 8 kips/strand. Placed symmetrical about ℄ Girder. May be moved laterally in pairs.

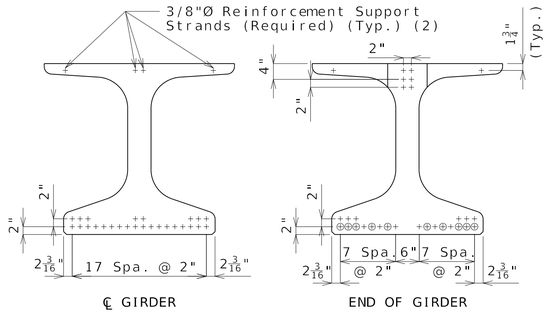


STRAND ARRANGEMENT

+ Indicates prestressing strand.

○ Indicates cut & shop bend with 3'-0" projection.

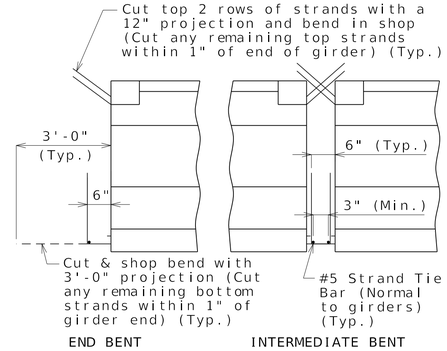


STRANDS AT GIRDER ENDS

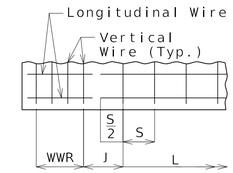


WELDED WIRE PLACEMENT

S = Vertical wire spacing

L = Length of WWR mats

J = Distance between WWR mats

## Bill of Reinforcing Steel

Bars Each Girder

| No. | Size/Mark | | Length | Shape |
|---|---|---|---|---|
| 88 | 3 | G1 | 2'-10" | 8 |
| 2 | 4 | G3 | 3'-10" | 20 |
| 2 | 4 | G4 | 2'-3" | 20 |
| 2 | 4 | G5 | 2'-8" | 20 |
| | | | | |
| | | | | |

Welded Wire Each Girder

| Mark | Size | S | W | L | J |
|---|---|---|---|---|---|
| WWR1 | D31 | 4" | W12 | 5'-8" | 8" |
| WWR2 | D31 | 8" | W12 | 6'-8" | 15¾" |
| WWR3 | D31 | 16" | W12 | 34'-8" | -- |
| WWR6 | D31 | 2" | W12 | 16" | 4" |
| | | | | | |

Bending Diagrams

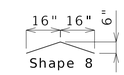


Shape 20

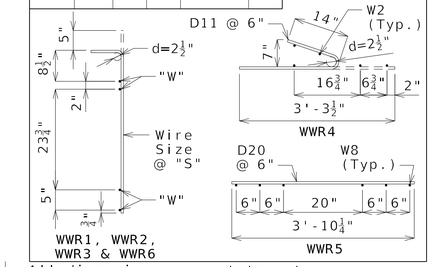


All dimensions are out to out.

Hooks and bends shall be in accordance with the CRSI Manual of Standard Practice for Detailing Reinforced Concrete Structures, Stirrup and Tie Dimensions.

Actual bar lengths are measured along centerline of bar to the nearest inch.

Minimum clearance to reinforcing shall be 1", unless otherwise shown.

All bar reinforcement shall be Grade 60.

WWR shall not be epoxy coated.

G4 and G5 not required for interior girders. G3 not required for exterior girders of intermediate spans. Half no. of G3, G4 and G5 not required for ext. girders of end spans.

## General Notes:

Concrete for prestressed beams shall be Class A-1 with f'c = 8000 psi and f'ci = 6500 psi.

Use 26 strands, 0.6"Ø Grade 270, with an initial prestress force of 1143 kips.

Pretensioned members shall be in accordance with Sec 1029.

Fabricator shall be responsible for location and design of lifting devices.

Exterior and interior girders are the same except: coil ties, top flange blockout, application of bond breaker.

The contractor shall provide bracing necessary for lateral and torsional stability of the girders during construction of the concrete slab and remove the bracing after the slab has attained 75% design strength. Contractor shall not drill holes in the girders.

For Girder Camber Diagram, see Sheet No. 17.

For location of coil ties at concrete diaphragms and integral bents, see Sheets No. 4, 11 and 15.

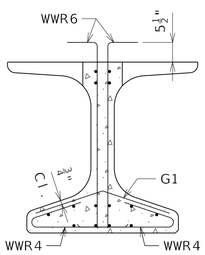


SECTION A-A

Strands not shown for clarity.

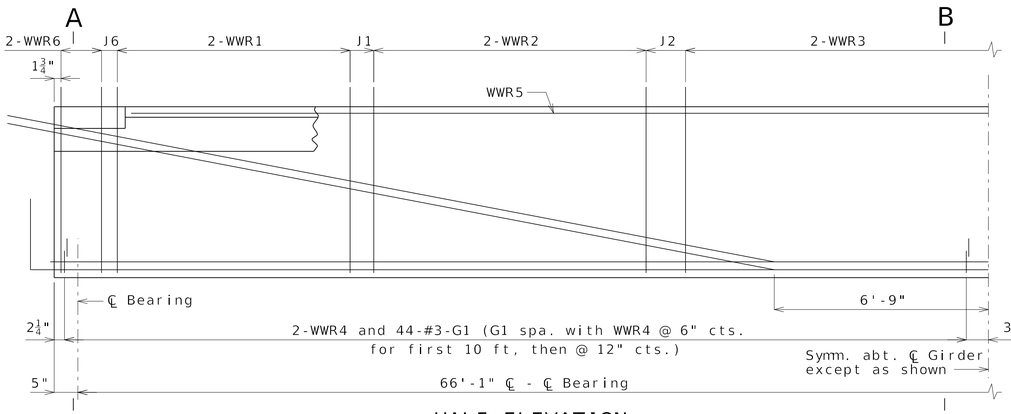


HALF ELEVATION

Reinforcement support strands not shown for clarity.

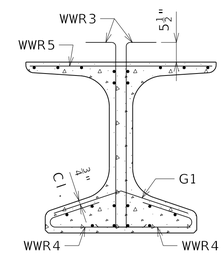


SECTION B-B

Strands not shown for clarity.

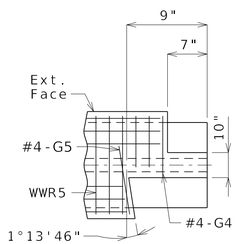


LEFT EXTERIOR GIRDER (BACK) AT INTERMEDIATE BENT

Rotate 180° for right ext.

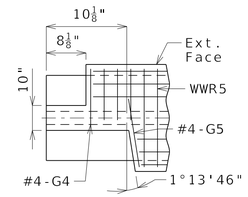


LEFT EXTERIOR GIRDER (AHEAD) AT INTERMEDIATE BENT

Rotate 180° for right ext.

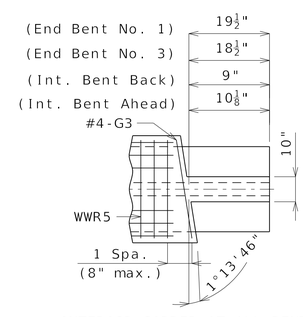


INTERIOR GIRDER AT ALL BENTS & EXTERIOR GIRDER AT END BENT

TOP FLANGE BLOCKOUT

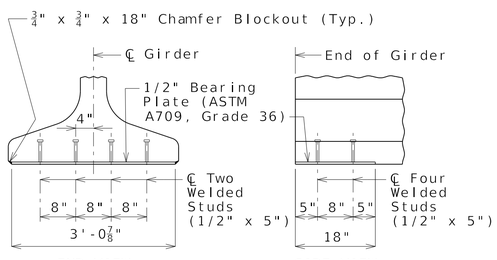


END VIEW

SIDE VIEW

BEARING PLATE

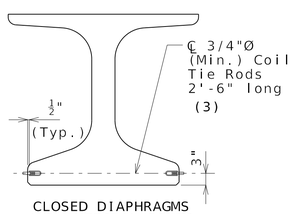


CLOSED DIAPHRAGMS AND INTEGRAL BENTS

COIL TIES

Exclude coil tie at exterior face of exterior girders except at integral end bents.

(3) 2'-6" at exterior face of exterior girders at end bents

# NU-GIRDERS - SPANS (1-2) AND (2-3) (WWR)

Detailed Aug 2024
Checked Dec 2024

Note: This drawing is not to scale. Follow dimensions.



STATE OF MISSOURI
OSMAN MOHAMMED
NUMBER PE-2021003145
PROFESSIONAL ENGINEER
02/20/2025 8:18:32 AM
Osman Mohammed
MO PE-2021003145

| | |
|---|---|
| DATE PREPARED | 19-FEB-2025 |
| ROUTE | 54WB |
| STATE | MO |
| DISTRICT | BR |
| SHEET NO. | 13 |
| COUNTY | CALLAWAY |
| JOB NO. | JST0021 |
| CONTRACT ID. | |
| PROJECT NO. | |
| BRIDGE NO. | A9556 |

| DATE | DESCRIPTION |
|---|---|
| 01/21/2025 | REV. A - FINAL REVIEW |
| 02/19/2025 | REV. 0 - RELEASED FOR CONSTRUCTION |

MISSOURI HIGHWAYS AND TRANSPORTATION COMMISSION
105 WEST CAPITOL
JEFFERSON CITY, MO 65102
1-888-ASK-MODOT (1-888-275-6636)

MoDOT IMPROVE I-70 DB PROJECT 1

MILLSTONE WEBER

MO STATE CERTIFICATE OF AUTHORITY #001444 ENGINEERING

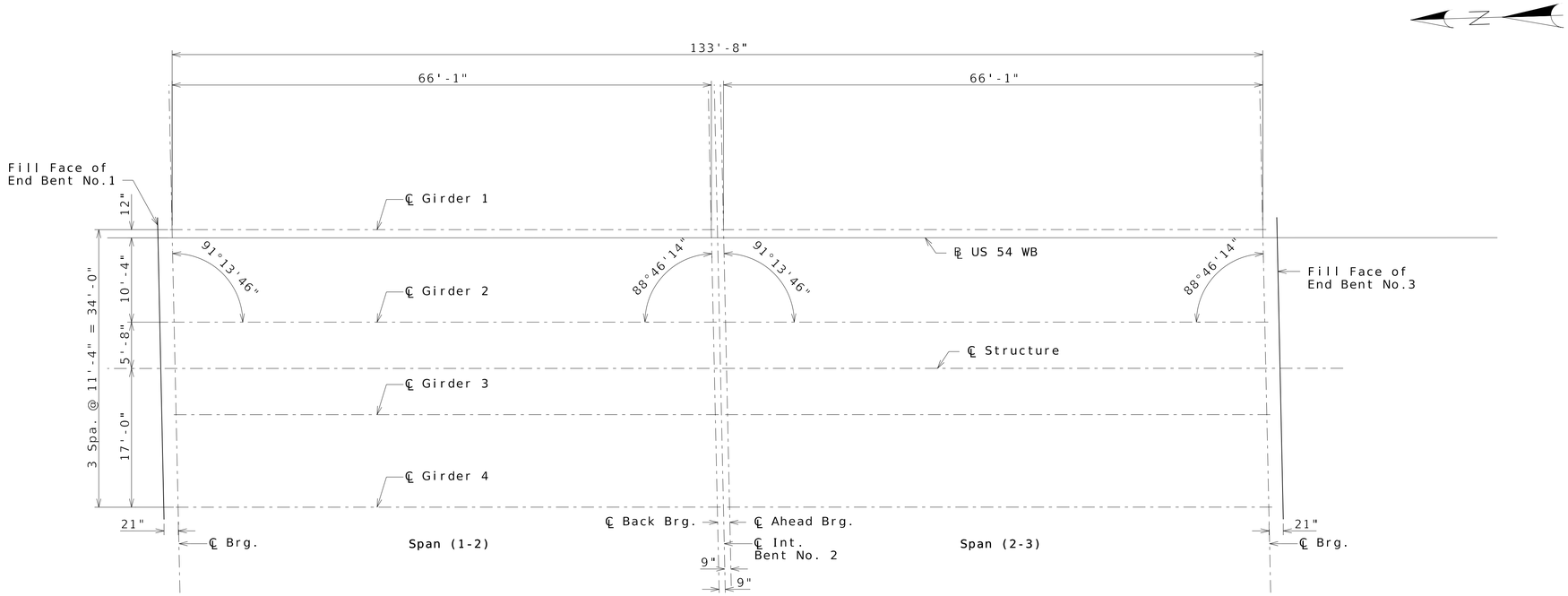


## FRAMING PLAN

Longitudinal Dimensions are Horizontal.

FRAMING PLAN

Detailed Aug 2024
Checked Dec 2024

Note: This drawing is not to scale. Follow dimensions.



STATE OF MISSOURI
OSMAN MOHAMMED
NUMBER PE-2021003145
PROFESSIONAL ENGINEER

02/20/2025 8:18:32 AM
Osman Mohammed
MO PE-2021003145

| | |
|---|---|
| DATE PREPARED | 19-FEB-2025 |
| ROUTE | 54WB |
| STATE | MO |
| DISTRICT | BR |
| SHEET NO. | 13 |
| COUNTY | CALLAWAY |
| JOB NO. | JST0021 |
| CONTRACT ID. | |
| PROJECT NO. | |
| BRIDGE NO. | A9556 |

| DESCRIPTION | DATE |
|---|---|
| REV. A - FINAL REVIEW | 01/21/2025 |
| REV. 0 - RELEASED FOR CONSTRUCTION | 02/19/2025 |

MISSOURI HIGHWAYS AND TRANSPORTATION COMMISSION
105 WEST CAPITOL
JEFFERSON CITY, MO 65102
1-888-ASK-MODOT (1-888-275-6636)

MoDOT IMPROVE I-70 DB PROJECT 1

MILLSTONE WEBER

MO STATE CERTIFICATE OF AUTHORITY #001444 ENGINEERING

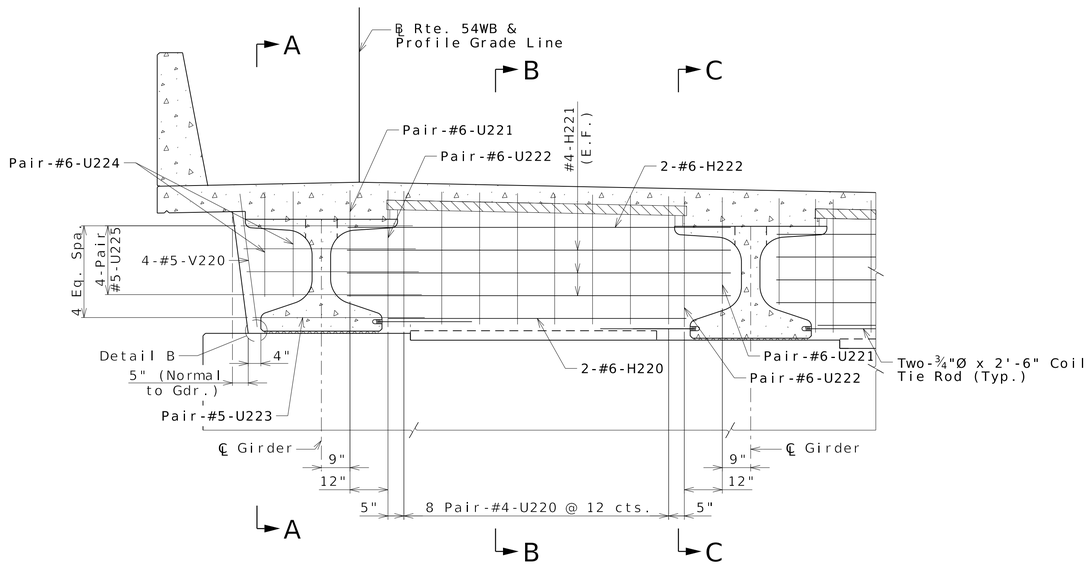


TYPICAL PART ELEVATION
(Normal to ℄ Rte. 54WB)

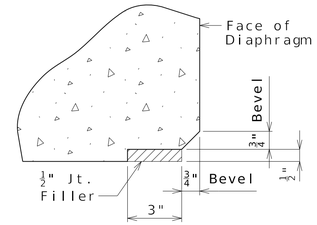


DETAIL A
(Edge Detail)

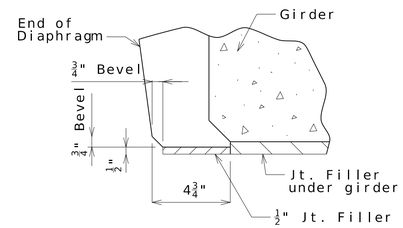


DETAIL B
(End Detail)

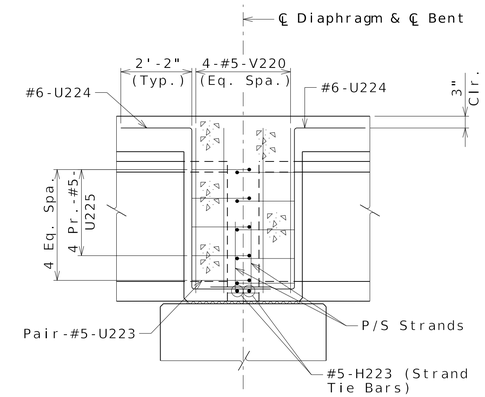


SECTION A-A

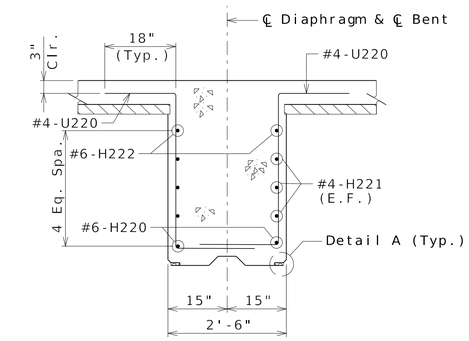


SECTION B-B

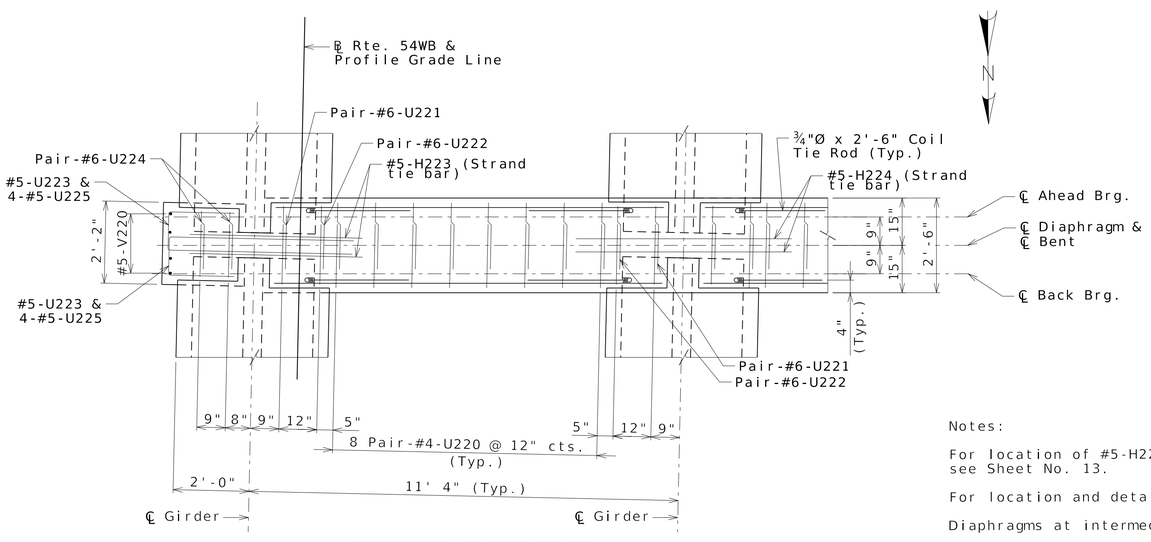


TYPICAL PART PLAN

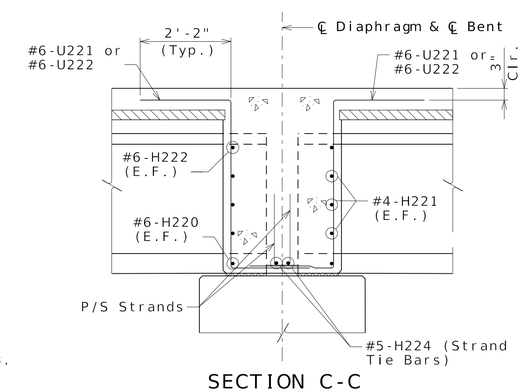


SECTION C-C

Notes:

For location of #5-H223 and #5-H224 (Strand Tie Bars), see Sheet No. 13.

For location and details of Coil Tie Rods, see Sheet No. 13.

Diaphragms at intermediate bent shall be built vertical.

For girder spacing, see Sheet No. 14.

All U-Bars in diaphragm shall be placed parallel to ℄ Girders.

# DIAPHRAGM AT INTERMEDITAE BENT NO. 2

Detailed Aug 2024
Checked Dec 2024

Note: This drawing is not to scale. Follow dimensions.



STATE OF MISSOURI
OSMAN MOHAMMED
NUMBER PE-2021003145
PROFESSIONAL ENGINEER

02/20/2025 8:18:33 AM
Osman Mohammed
MO PE-2021003145

| DATE PREPARED | |
|---|---|
| 19-FEB-2025 | |
| ROUTE 54WB | STATE MO |
| DISTRICT BR | SHEET NO. 15 |
| COUNTY CALLAWAY | |
| JOB NO. JST0021 | |
| CONTRACT ID. | |
| PROJECT NO. | |
| BRIDGE NO. A9556 | |

| DATE | DESCRIPTION |
|---|---|
| 01/21/2025 | REV. A - FINAL REVIEW |
| 02/19/2025 | REV. 0 - RELEASED FOR CONSTRUCTION |

MISSOURI HIGHWAYS AND TRANSPORTATION COMMISSION
105 WEST CAPITOL
JEFFERSON CITY, MO 65102
1-888-ASK-MODOT (1-888-275-6636)

MoDOT IMPROVE I-70 DB PROJECT 1

MILLSTONE WEBER

MO STATE CERTIFICATE OF AUTHORITY #001444 ENGINEERING

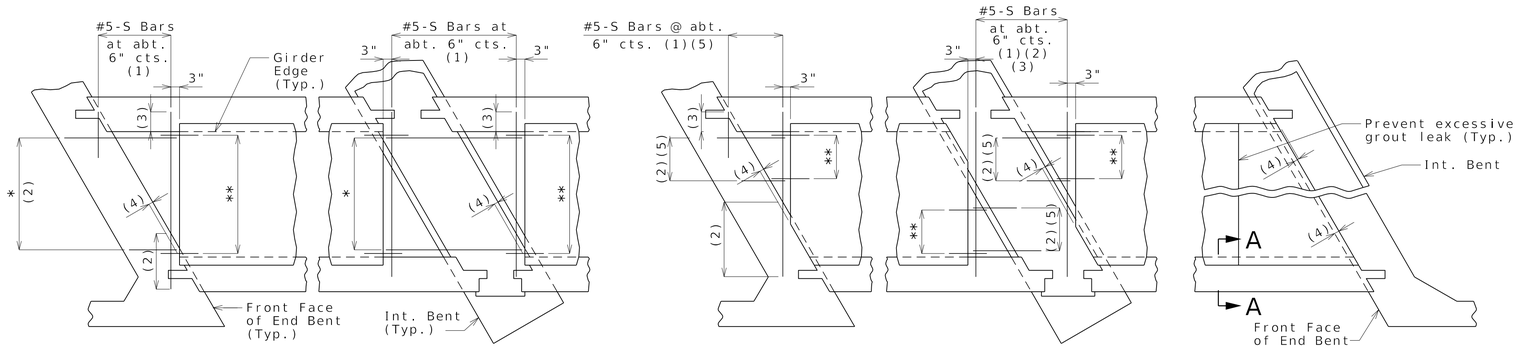


SQUARED END PANELS OR TRUNCATED END PANELS

## PLAN SHOWING PANEL PLACEMENT

* #5-S Bars at abt. 9" cts. (1)
** #3-P1 at 12" cts. (End panels only)

SKEWED END PANELS

| Joint Filler Dimensions | | |
|---|---|---|
| Width | Height | |
| | Min. | Max. |
| 3" | 1" | 4" |

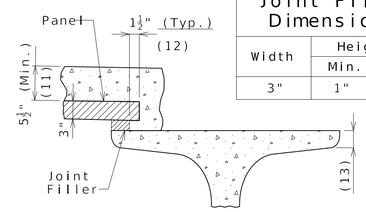


SECTION A-A

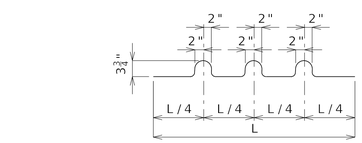


BENDING DIAGRAM FOR U1 BAR

U1 Bars may be oriented at right angles to location and spacing shown. U1 Bars shall be placed between P1 bars.

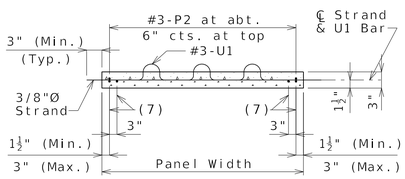


SECTION B-B

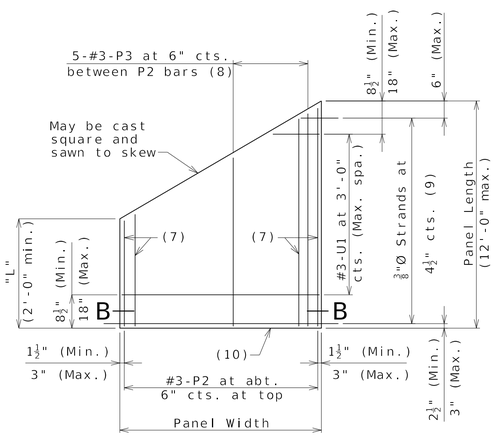


PLAN OF OPTIONAL SKEWED END PANEL

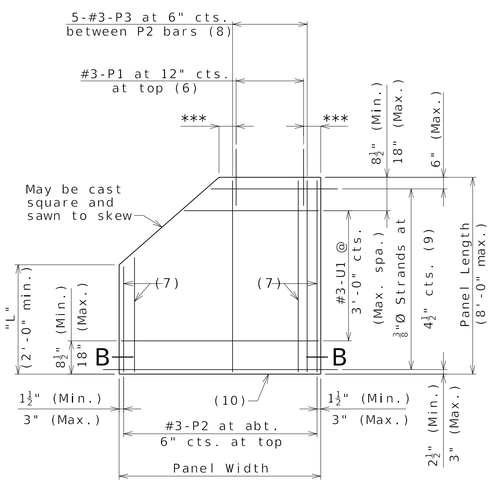


PLAN OF OPTIONAL TRUNCATED END PANEL

*** 3" (Min.), 6" (Max.)

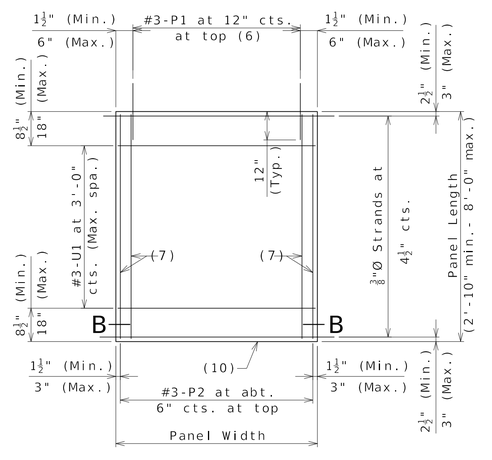


PLAN OF SQUARED PANEL

## Reference Notes:

**Plan of Panel Placement:**
(1) S-bars shown are bottom steel in slab between panels and used with squared and truncated end panels only.

(2) Extend S-bars 18 inches beyond the front face of end bents and int. bents for squared and truncated end panels only.

(3) Extend S-bars 9 inches beyond edge of girder (Typ.).

(4) End panels shall be dimensioned 1/2" min. to 1 1/2" max. from the inside face of diaphragm.

(5) For truncated end panels, use a min. of #5-S bars at 6" crossings in openings, or min. 4x4-W7xW7.

**Plans of Panels:**
(6) For end panels only, P1 bars shall be 2'-0" in length and embedded 12". P1 bars will not be required for panels at squared integral end bents.

(7) #3-P2 bars near edge of panel at bottom (under strands).

(8) Use #3-P3 bars if panel is skewed 45° or greater.

(9) Any strand 2'-0" or shorter shall have a #4 reinforcing bar on each side of it, centered between strands. Strands 2'-0" or shorter may then be debonded at the fabricator's option.

(10) Optional 1/2" x 45° Chamfer one or both sides at bottom.

**Section A-A:**
(11) Slab thickness over prestressed panels varies due to girder camber. In order to maintain minimum slab thickness, it may be necessary to raise the grade uniformly throughout the structure.

(12) Contractor shall ensure proper consolidation under and between panels.

(13) At the contractor's option, the variation in slab thickness over prestressed panels may be eliminated or reduced by increasing and varying the girder top flange thickness. Dimensions shall be shown on the shop drawings.

## General Notes:

**Prestressed Panels:**
Concrete for prestressed panels shall be Class A-1 with f'c = 6,000 psi, f'ci = 4,000 psi.

The top surface of all panels shall receive a scored finish with a depth of scoring of 1/8" perpendicular to the prestressing strands in the panels.

Prestressing tendons shall be high-tensile strength, uncoated, seven-wire, low-relaxation strands for prestressed concrete in accordance with AASHTO M 203 Grade 270, with nominal diameter of strand = 3/8" and nominal area = 0.085 sq.in. and minimum ultimate strength = 22.95 kips (270 ksi). Larger strands may be used with the same spacing and initial tension.

Initial prestressing force = 17.2 kips/strand.

The method and sequence of releasing the strands shall be shown on the shop drawings.

Suitable anchorage devices for lifting panels may be cast in panels, provided the devices are shown on the shop drawings and approved by the engineer. Panel lengths shall be determined by the contractor and shown on the shop drawings.

When squared end panels are used at skewed bents, the skewed portion shall be cast full depth.

Support from diaphragm forms is required under the optional skewed end until cast-in-place concrete has reached 3,000 psi compressive strength.

Prestressed panels shall be brought to saturated surface-dry (SSD) condition just prior to the deck pour. There shall be no free standing water on the panels or in the area to be cast.

**Reinforcing Steel:**
All dimensions are out to out.

Hooks and bends shall be in accordance with the CRSI Manual of Standard Practice for Detailing Reinforced Concrete Structures, Stirrup and Tie Dimensions.

Minimum clearance to reinforcing steel shall be 1 1/2", unless otherwise shown.

If U1 bars interfere with placement of slab steel, U1 loops may be bent over, as necessary, to clear slab steel.

Deformed welded wire reinforcement (WWR) providing a minimum area of reinforcing perpendicular to strands of 0.22 sq in./ft, with spacing parallel to strands sufficient to ensure proper handling, may be used in lieu of the #3-P2 bars shown. Wire diameter shall not be larger than 0.375 inch. The above alternative reinforcement criteria may be used in lieu of the #3-P3 bars, when required, and placed over a width not less than 2 feet.

The following reinforcing steel shall be tied securely to the strands with the following maximum spacing in each direction:
#3-P2 bars at 16 inches.
WWR at 24 inches.

The #3-U1 bars shall be tied securely to #3-P2 bars, to WWR or to strands (when placed between P1 bars) at about 3-foot centers.

Minimum reinforcement steel length shall be 2'-0".

All reinforcement other than prestressing strands shall be epoxy coated.

Precast panels may be in contact with stirrup reinforcing in diaphragms.

S-bars are not listed in the bill of reinforcing.

**Joint Filler:**
Joint filler shall be preformed fiber expansion joint material in accordance with Sec 1057 or expanded or extruded polystyrene bedding material in accordance with Sec 1073.

Use Slab Haunching Diagram on Sheet No. 17 for determining thickness of joint filler within the limits noted in the table of Joint Filler Dimensions.

Thicker material may be used on one or both sides of the girder to reduce cast-in-place concrete thickness to within tolerances.

The same thickness of preformed fiber expansion joint material shall be used under any one edge of any panel except at locations where top flange thickness may be stepped. The maximum change in thickness between adjacent panels shall be 1/2 inch. The polystyrene bedding material may be cut with a transition to match haunch height above top of flange.

Joint filler shall be glued to the girder. When thickness exceeds 1 1/2 inches, the joint filler shall be glued top and bottom. The glue used shall be the type recommended by the joint filler manufacturer.

Edges of panels shall be uniformly seated on the joint filler before slab reinforcement is placed.

# PRESTRESSED PANELS

Detailed Aug 2024
Checked Dec 2024

Note: This drawing is not to scale. Follow dimensions.



STATE OF MISSOURI
OSMAN MOHAMMED
NUMBER PE-2021003145
PROFESSIONAL ENGINEER
02/20/2025 8:18:33 AM
Osman Mohammed
MO PE-2021003145

| | |
|---|---|
| DATE PREPARED | 19-FEB-2025 |
| ROUTE | 54WB |
| STATE | MO |
| DISTRICT | BR |
| SHEET NO. | 16 |
| COUNTY | CALLAWAY |
| JOB NO. | JST0021 |
| CONTRACT ID. | |
| PROJECT NO. | |
| BRIDGE NO. | A9556 |

| DATE | DESCRIPTION |
|---|---|
| 01/21/2025 | REV. A - FINAL REVIEW |
| 02/19/2025 | REV. 0 - RELEASED FOR CONSTRUCTION |

MISSOURI HIGHWAYS AND TRANSPORTATION COMMISSION
105 WEST CAPITOL
JEFFERSON CITY, MO 65102
1-888-ASK-MODOT (1-888-275-6636)

MoDOT IMPROVE I-70 DB PROJECT 1

MILLSTONE WEBER

MO STATE CERTIFICATE OF AUTHORITY #001444 ENGINEERING

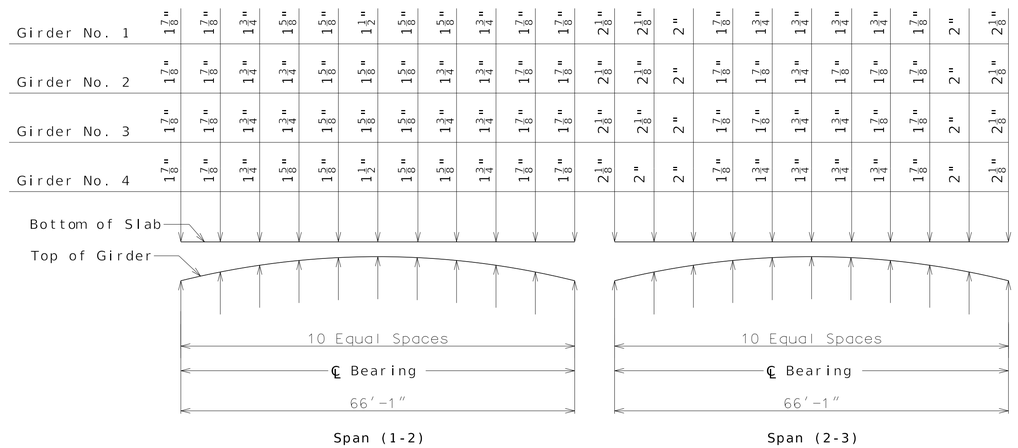


## THEORETICAL SLAB HAUNCHING DIAGRAM (ESTIMATED AT 90 DAYS)

If Girder camber is different from that shown in the camber diagram, in order to maintain minimum slab thickness, an adjustment of the slab haunches, an increase in slab thickness or a raise in grade uniformly throughout the structure shall be necessary. The haunch shall be limited to ensure the projecting girder reinforcement or hairpin bar is embedded into slab at least 2 inches.

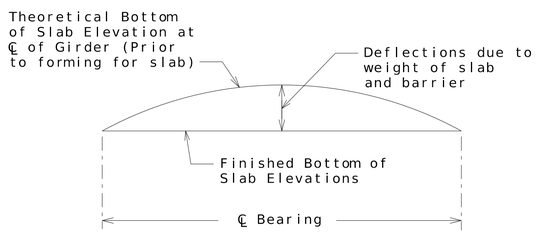


## TYPICAL SLAB ELEVATIONS DIAGRAM

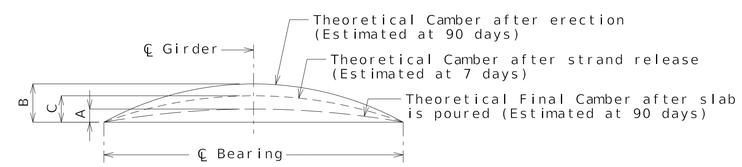


| Girder | Span (1-2) | | | Span (2-3) | | |
|---|---|---|---|---|---|---|
| | A | B | C | A | B | C |
| All Girders | $1\frac{5}{8}$" | $2\frac{1}{2}$" | $2\frac{1}{8}$" | $1\frac{5}{8}$" | $2\frac{1}{2}$" | $2\frac{1}{8}$" |

## GIRDER CAMBER DIAGRAM

Conversion Factors for Girder Camber (Estimated at 90 days):

0.1 pt. = 0.314 x 0.5 pt.
0.2 pt. = 0.593 x 0.5 pt.
0.3 pt. = 0.813 x 0.5 pt.
0.4 pt. = 0.952 x 0.5 pt.

0.25 pt. = 0.7125 x 0.5 pt.

## Theoretical Bottom of Slab Elevations at Centerline of Girder (Prior to forming for slab) (Estimated at 90 days)

| Girder Number | Span (1-2) (66'-1" ℄ Brg. - ℄ Brg.) | | | | | | | | | | |
|---|---|---|---|---|---|---|---|---|---|---|---|
| | ℄ Brg. | .10 | .20 | .30 | .40 | .50 | .60 | .70 | .80 | .90 | ℄ Brg. |
| 1 | 852.78 | 852.99 | 853.19 | 853.37 | 853.54 | 853.70 | 853.84 | 853.96 | 854.07 | 854.16 | 854.25 |
| 2 | 852.60 | 852.81 | 853.01 | 853.20 | 853.37 | 853.53 | 853.66 | 853.79 | 853.89 | 853.98 | 854.06 |
| 3 | 852.38 | 852.59 | 852.79 | 852.98 | 853.15 | 853.31 | 853.44 | 853.56 | 853.67 | 853.76 | 853.84 |
| 4 | 852.16 | 852.37 | 852.57 | 852.75 | 852.92 | 853.08 | 853.21 | 853.34 | 853.44 | 853.54 | 853.62 |
| Girder Number | Span (2-3) (66'-1" ℄ Brg. - ℄ Brg.) | | | | | | | | | | |
| | ℄ Brg. | .10 | .20 | .30 | .40 | .50 | .60 | .70 | .80 | .90 | ℄ Brg. |
| 1 | 854.27 | 854.39 | 854.51 | 854.60 | 854.69 | 854.76 | 853.81 | 854.84 | 854.86 | 854.87 | 854.88 |
| 2 | 854.09 | 854.21 | 854.33 | 854.43 | 854.51 | 854.58 | 854.63 | 854.66 | 854.68 | 854.69 | 854.70 |
| 3 | 853.86 | 853.99 | 854.10 | 854.20 | 854.29 | 854.35 | 854.41 | 854.44 | 854.46 | 854.47 | 854.47 |
| 4 | 853.64 | 853.76 | 853.87 | 853.97 | 854.05 | 854.12 | 854.17 | 854.21 | 854.23 | 854.24 | 854.25 |

Elevations are based on a constant slab thickness of 8 1/2" and include allowance for theoretical dead load deflections due to weight of slab (including precast panel) and Type D Barrier.

# THEORETICAL SLAB HAUNCHING DIAGRAM, THEORETICAL BOTTOM OF SLAB ELELVATIONS, AND GIRDER CAMBER DIAGRAM

Detailed Aug 2024
Checked Dec 2024

Note: This drawing is not to scale. Follow dimensions.



STATE OF MISSOURI
OSMAN MOHAMMED
NUMBER PE-2021003145
PROFESSIONAL ENGINEER

02/20/2025 8:18:33 AM
Osman Mohammed
MO PE-2021003145

| | |
|---|---|
| DATE PREPARED | 19-FEB-2025 |
| ROUTE | 54WB |
| STATE | MO |
| DISTRICT | BR |
| SHEET NO. | 17 |
| COUNTY | CALLAWAY |
| JOB NO. | JST0021 |
| CONTRACT ID. | |
| PROJECT NO. | |
| BRIDGE NO. | A9556 |

| DESCRIPTION | DATE |
|---|---|
| REV. A - FINAL REVIEW | 01/21/2025 |
| REV. 0 - RELEASED FOR CONSTRUCTION | 02/19/2025 |

MISSOURI HIGHWAYS AND TRANSPORTATION COMMISSION
105 WEST CAPITOL
JEFFERSON CITY, MO 65102
1-888-ASK-MODOT (1-888-275-6636)

MoDOT IMPROVE I-70 DB PROJECT 1

MILLSTONE WEBER

MO STATE CERTIFICATE OF AUTHORITY #001444 ENGINEERING

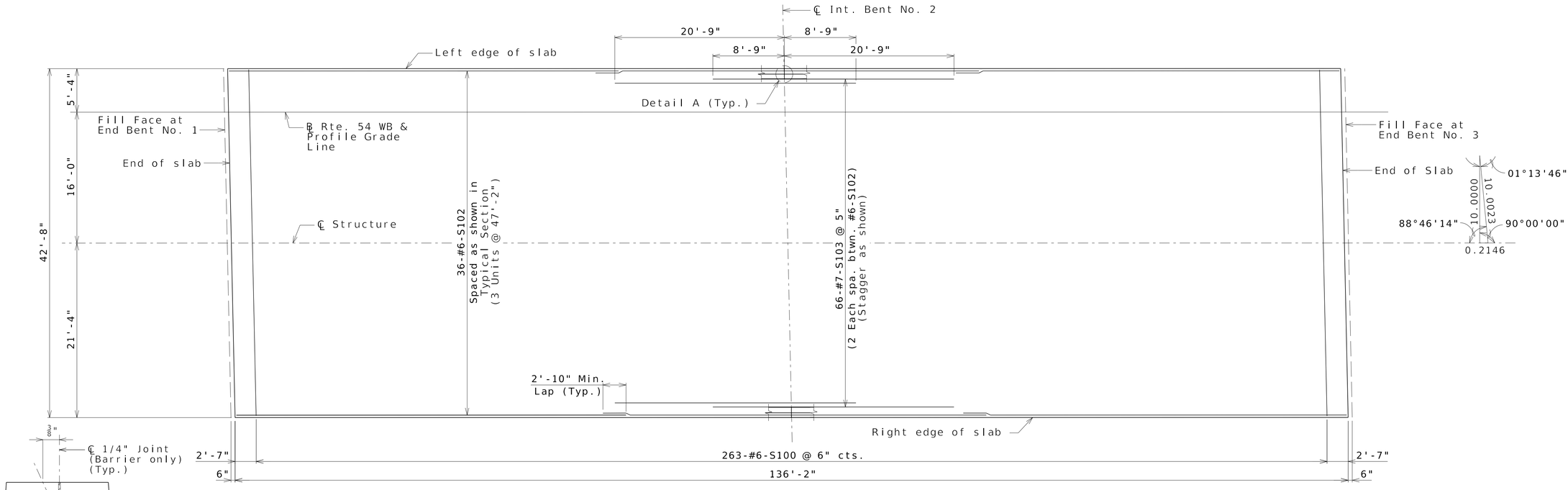


TOP REINFORCEMENT

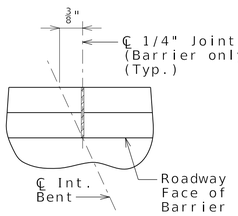


DETAIL A

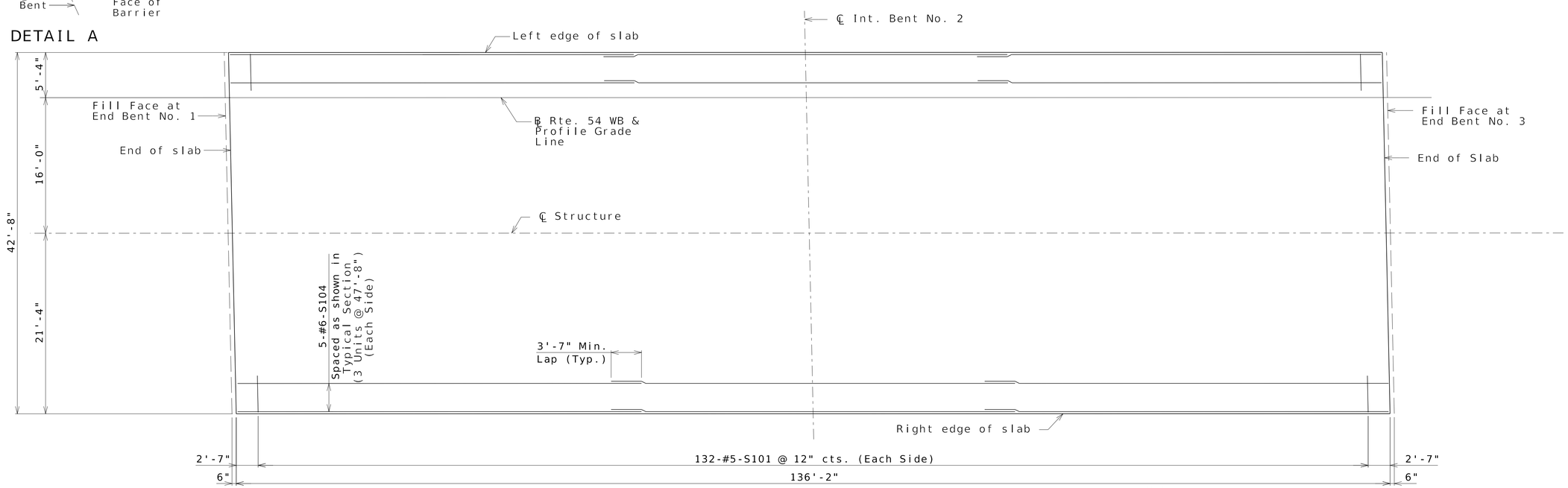


BOTTOM REINFORCEMENT

# SLAB PLAN SHOWING REINFORCING

Notes:
Longitudinal slab dimensions are measured horizontally.
For Section Thru Slab, see Sheet No. 19.
For Details and Reinforcement of Barrier not shown, see Sheet No. 20.
For Theoretical Slab Haunching Diagram, Theoretical Bottom of Slab Elevations, Girder Camber Diagram, see Sheet No. 17.
For Details of Precast Prestressed Panels, see Sheet No. 16.

Detailed Aug 2024
Checked Dec 2024

Note: This drawing is not to scale. Follow dimensions.



STATE OF MISSOURI
OSMAN MOHAMMED
NUMBER PE-2021003145
PROFESSIONAL ENGINEER

02/20/2025 8:18:33 AM
Osman Mohammed
MO PE-2021003145

| DATE PREPARED | |
|---|---|
| 19-FEB-2025 | |
| ROUTE 54WB | STATE MO |
| DISTRICT BR | SHEET NO. 18 |
| COUNTY CALLAWAY | |
| JOB NO. JST0021 | |
| CONTRACT ID. | |
| PROJECT NO. | |
| BRIDGE NO. A9556 | |

| DATE | DESCRIPTION |
|---|---|
| 01/21/2025 | REV. A - FINAL REVIEW |
| 02/19/2025 | REV. 0 - RELEASED FOR CONSTRUCTION |

MISSOURI HIGHWAYS AND TRANSPORTATION COMMISSION
105 WEST CAPITOL
JEFFERSON CITY, MO 65102
1-888-ASK-MODOT (1-888-275-6636)

MoDOT IMPROVE I-70 DB PROJECT 1

MILLSTONE WEBER

MO STATE CERTIFICATE OF AUTHORITY #001444 ENGINEERING

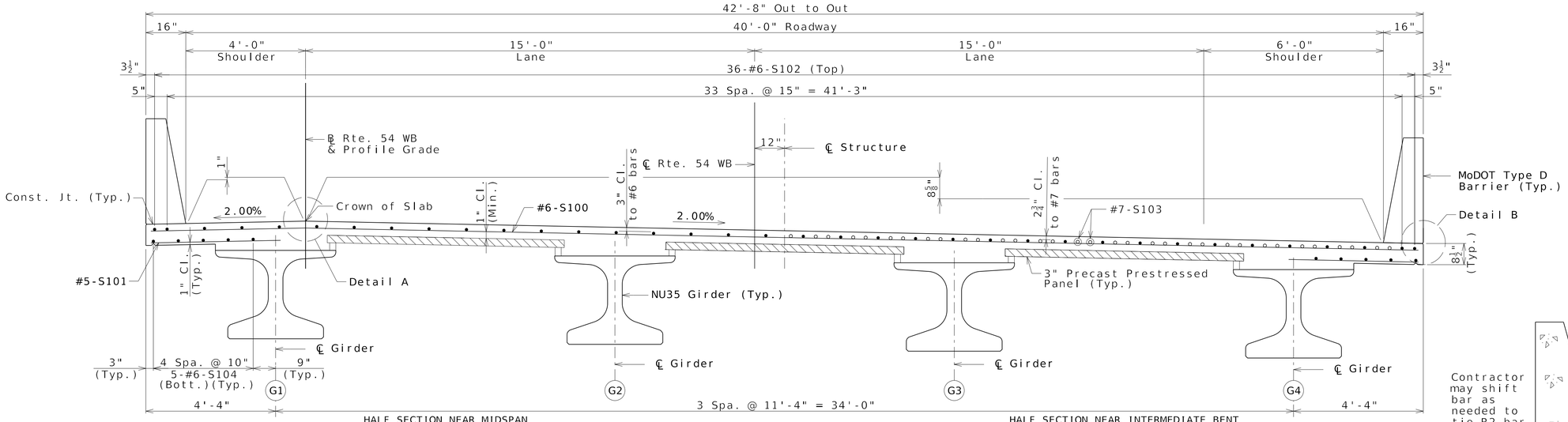


SECTION THRU SLAB
(Looking Upstation)

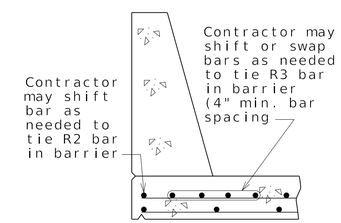


OPTIONAL SHIFTING TOP BARS AT BARRIER

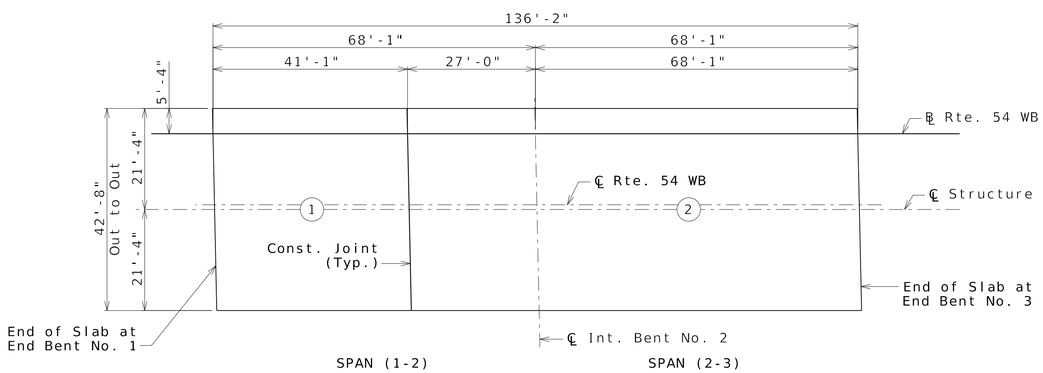


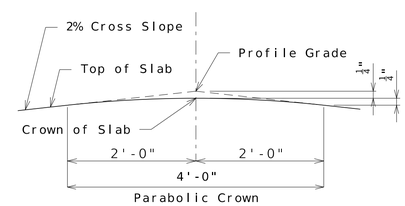


DETAIL A

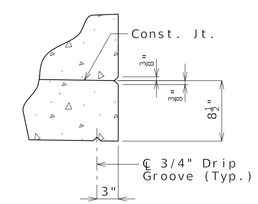


DETAIL B

| | Sequence of Pours | | Min. Rate of Pour Cu. Yds./Hr. |
|---|---|---|---|
| | Direction | | With Retarder |
| Basic Sequence | 1<br>End to 2 | 2<br>1 to End | 25 |
| Alternate pours to the basic skip sequence are subject to the approval of the engineer in accordance with Sec 703. | | | |
| Alternate "A" Pours | 1 + 2<br>End to End | | 25 |

The contractor shall furnish an approved retarder to retard the set of the concrete to 2.5 hours, and shall pour and satisfactorily finish the slab pours at the rate given.

The concrete diaphragm at the intermediate bent and integral end bents shall be poured a minimum of 30 minutes and a maximum of 2 hours before the slab is poured.

SLAB POURING SEQUENCE

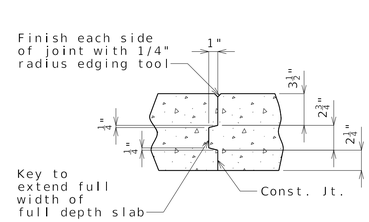


FULL DEPTH SLAB

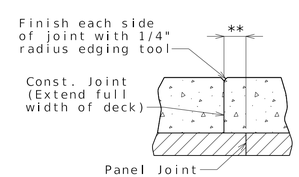


** Adjust the construction joint to a clearance of 6 inches minimum from the panel joint.

SLAB CONSTRUCTION JOINT

Notes:
For details of Precast Prestressed Panels, see Sheet No. 16 .
For details and reinforcement of Type D Barrier not shown, see Sheet No. 20.
For Theoretical Bottom of Slab Elevations, Girder Camber Diagram and Theoretical Slab Haunching Diagram, see Sheet No. 17.
For Plan of Slab Showing Reinforcement, see Sheet No. 18.

# SLAB DETAILS

Detailed Aug 2024
Checked Dec 2024

Note: This drawing is not to scale. Follow dimensions.



STATE OF MISSOURI
OSMAN MOHAMMED
NUMBER PE-2021003145
PROFESSIONAL ENGINEER

02/20/2025 8:18:33 AM
Osman Mohammed
MO PE-2021003145

| DATE PREPARED | |
|---|---|
| 19-FEB-2025 | |
| ROUTE 54WB | STATE MO |
| DISTRICT BR | SHEET NO. 19 |
| COUNTY CALLAWAY | |
| JOB NO. JST0021 | |
| CONTRACT ID. | |
| PROJECT NO. | |
| BRIDGE NO. A9556 | |

| DATE | DESCRIPTION |
|---|---|
| 01/21/2025 | REV. A - FINAL REVIEW |
| 02/19/2025 | REV. 0 - RELEASED FOR CONSTRUCTION |

MISSOURI HIGHWAYS AND TRANSPORTATION COMMISSION
105 WEST CAPITOL
JEFFERSON CITY, MO 65102
1-888-ASK-MODOT (1-888-275-6636)

MoDOT IMPROVE I-70 DB PROJECT 1

MILLSTONE WEBER

MO STATE CERTIFICATE OF AUTHORITY #001444 ENGINEERING

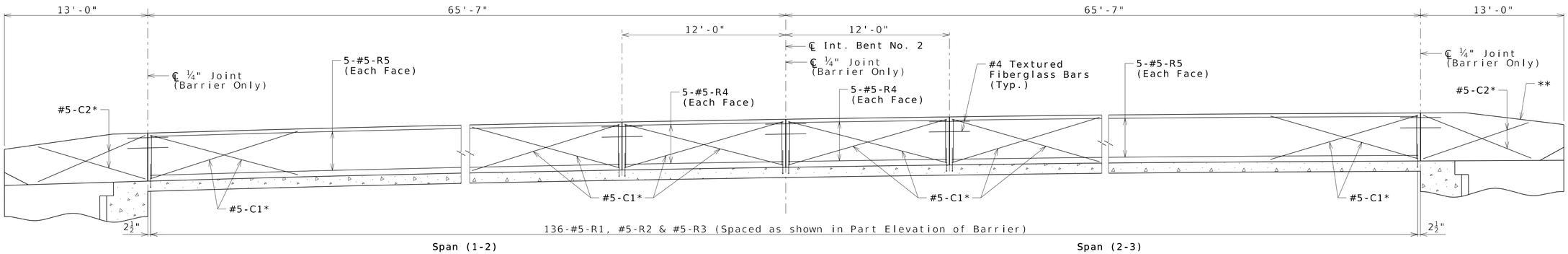


## ELEVATION OF TYPE D BARRIER

(Left Barrier shown, Right Barrier similar unless noted otherwise)

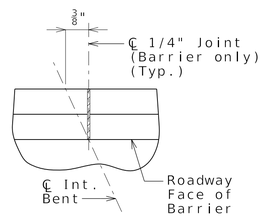


PART PLAN SHOWING JOINT LOCATION

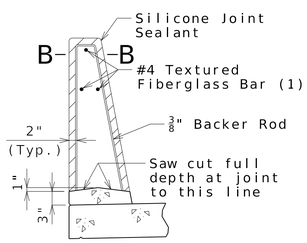


SECTION THRU SAW CUT JOINT

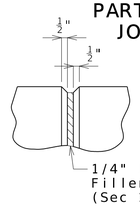


PART ELEVATION AT FORMED JOINT

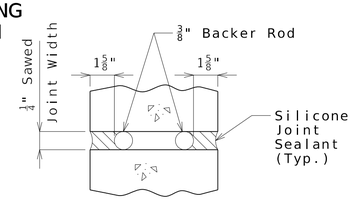


SECTION B-B

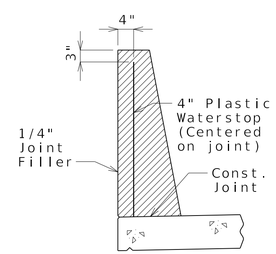


WATERSTOP DETAIL

Plastic waterstop shall be placed in all formed joints, except structures with superelevation, use on lower joints only.

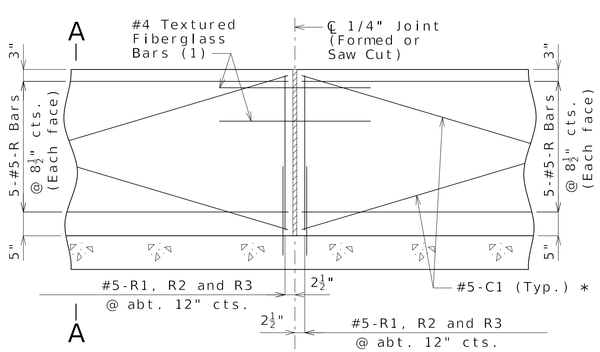


PART ELEVATION OF BARRIER

(1) Four feet long, centered on joint, slip-formed option only

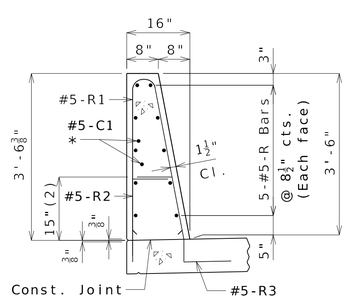


SECTION A-A

Use a minimum lap of 3'-1" for #5 horizontal barrier bars.

The cross-sectional area above the slab is 3.52 square feet.

(2) To top of bar

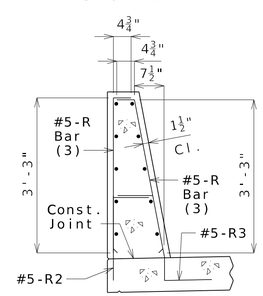


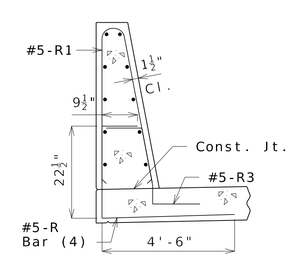


R-BAR PERMISSIBLE ALTERNATE SHAPE

(3) The R1 bar may be separated into two bars as shown, at the contractor's option, only when slip forming is not used. (All dimensions are out to out.)

(4) The R2 bar and #5 bottom transverse slab bar in cantilever (prestressed panels only) combination may be furnished as one bar as shown, at the contractor's option.

## General Notes:

* Slip-formed option only.

** Taper for guardrail attachment not required at southwest corner of Type D Barrier at End Bent No. 3.

Conventional forming or slip forming may be used. Saw cut joints may be used with conventional forming.

Top of barrier shall be built parallel to grade and barrier joints (except at end bents) normal to grade.

All exposed edges of barrier shall have either a 1/2-inch radius or a 3/8-inch bevel, unless otherwise noted.

Concrete in barrier shall be Class B-1.

Concrete traffic barrier delineators shall be placed on top of the barrier as shown on Missouri Standard Plan 617.10 and in accordance with Sec 617. Delineators on bridges with two-lane, two-way traffic shall have retroreflective sheeting on both sides.

Joint sealant and backer rods shall be in accordance with Sec 717 for silicone joint sealant for saw cut and formed joints.

For slip-formed option, both sides of barrier shall have a vertically broomed finish and the top shall have a transversely broomed finish.

Plastic waterstop shall not be used with saw cut joints.

# TYPE D BARRIER

Detailed Aug 2024
Checked Dec 2024

Note: This drawing is not to scale. Follow dimensions.



STATE OF MISSOURI
OSMAN MOHAMMED
NUMBER PE-2021003145
PROFESSIONAL ENGINEER

02/20/2025 8:18:33 AM
Osman Mohammed
MO PE-2021003145

| DATE PREPARED | |
|---|---|
| 19-FEB-2025 | |
| ROUTE 54WB | STATE MO |
| DISTRICT BR | SHEET NO. 20 |
| COUNTY CALLAWAY | |
| JOB NO. JST0021 | |
| CONTRACT ID. | |
| PROJECT NO. | |
| BRIDGE NO. A9556 | |

| DATE | DESCRIPTION |
|---|---|
| 01/21/2025 | REV. A - FINAL REVIEW |
| 02/19/2025 | REV. 0 - RELEASED FOR CONSTRUCTION |

MISSOURI HIGHWAYS AND TRANSPORTATION COMMISSION
105 WEST CAPITOL
JEFFERSON CITY, MO 65102
1-888-ASK-MODOT (1-888-275-6636)

MoDOT IMPROVE I-70 DB PROJECT 1

MILLSTONE WEBER

MO STATE CERTIFICATE OF AUTHORITY #001444 ENGINEERING

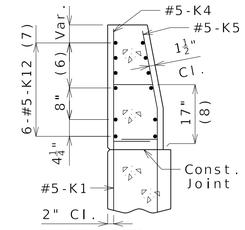


SECTION A-A

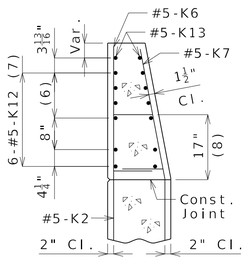


SECTION B-B

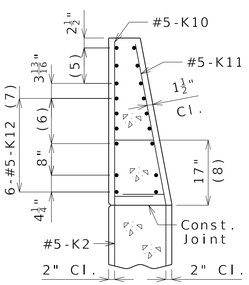


SECTION C-C

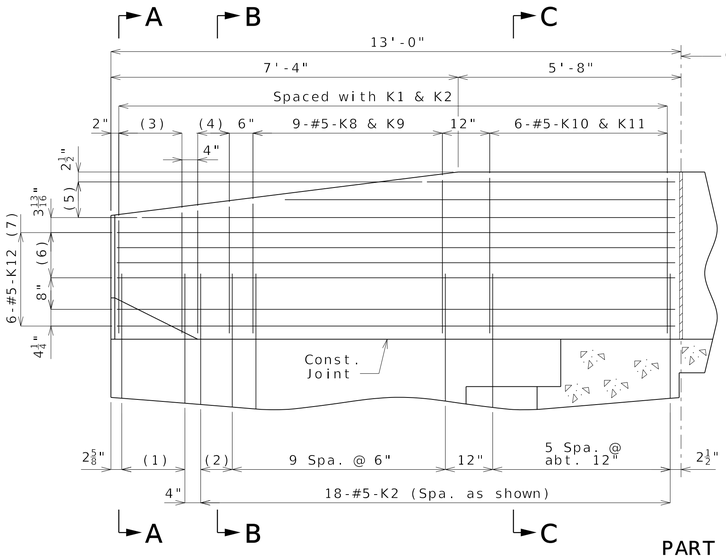


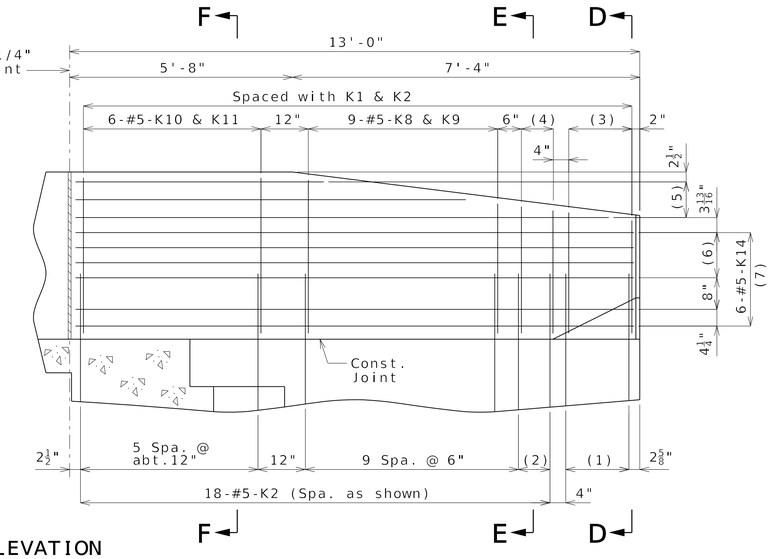


PART ELEVATION

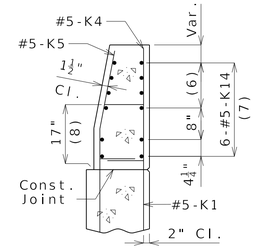


SECTION D-D

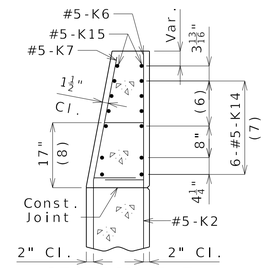


SECTION E-E

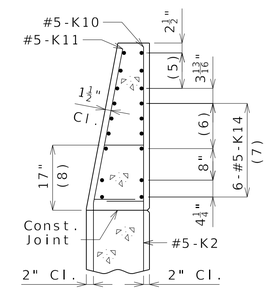


SECTION F-F

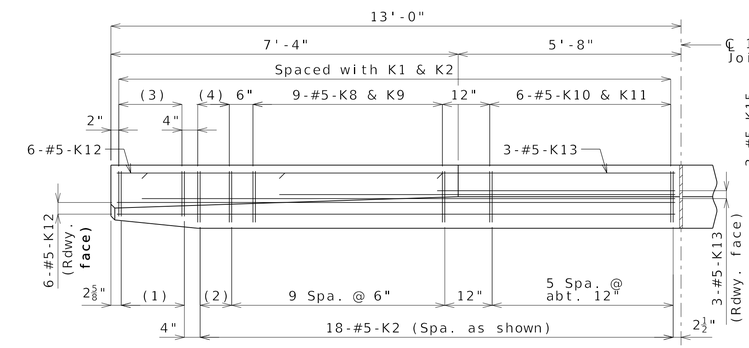


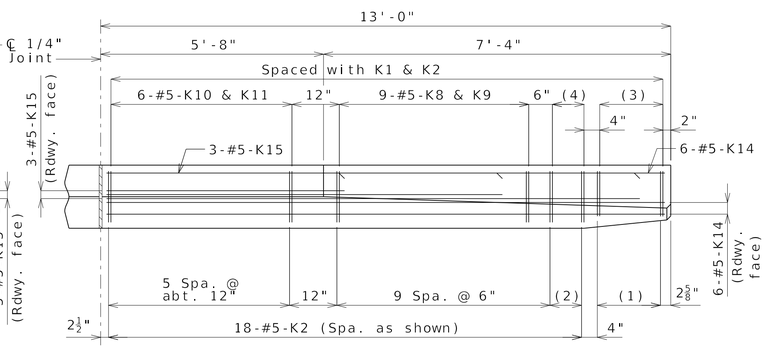


PART PLAN

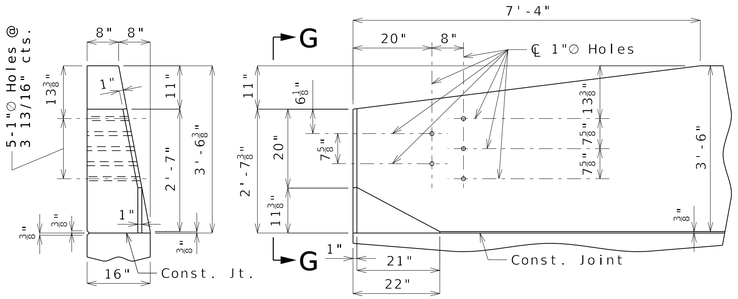


ELEVATION G-G

ELEVATION

(1) 5-#5-K1 @ 4" cts.

(2) 2 spaces @ 4"

(3) 5-#5-K4 & K5

(4) 3-#5-K6 & K7

(5) 3-#5-K13 or K15 @ 4½" cts., each face

(6) 3 spaces @ 3 13/16"

(7) Spaced as shown, each face

(8) To top of bar




K10-K11 BAR PERMISSIBLE ALTERNATE SHAPE

(Other K bars not shown for clarity)

The K10-K11 bar combination may be furnished as one bar as shown, at the contractor's option.

All dimensions are out to out.

* Transition to zero at Type A curb for gutter lines to match.

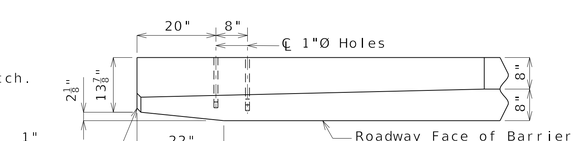


PLAN

DETAILS OF GUARD RAIL ATTACHMENT

## General Notes:

Concrete traffic barrier delineators shall be placed on top of the barrier as shown on Missouri Standard Plan 617.10 and in accordance with Sec 617. Delineators on bridges with two-lane, two-way traffic shall have retroreflective sheeting on both sides.

**Reinforcing Steel:**
Minimum clearance to reinforcing steel shall be 1 1/2" except as shown for bars embedded into end bent.

# TYPE D BARRIER (LEFT) AT END BENTS

Note: This drawing is not to scale. Follow dimensions.

Detailed Aug 2024
Checked Dec 2024



STATE OF MISSOURI
OSMAN MOHAMMED
NUMBER PE-2021003145
PROFESSIONAL ENGINEER
02/20/2025 8:18:33 AM
Osman Mohammed
MO PE-2021003145

| | |
|---|---|
| DATE PREPARED | 19-FEB-2025 |
| ROUTE | 54WB |
| STATE | MO |
| DISTRICT | BR |
| SHEET NO. | 21 |
| COUNTY | CALLAWAY |
| JOB NO. | JST0021 |
| CONTRACT ID. | |
| PROJECT NO. | |
| BRIDGE NO. | A9556 |

| DATE | DESCRIPTION |
|---|---|
| 01/21/2025 | REV. A - FINAL REVIEW |
| 02/19/2025 | REV. 0 - RELEASED FOR CONSTRUCTION |

MISSOURI HIGHWAYS AND TRANSPORTATION COMMISSION
105 WEST CAPITOL
JEFFERSON CITY, MO 65102
1-888-ASK-MODOT (1-888-275-6636)

MoDOT IMPROVE I-70 DB PROJECT 1

MILLSTONE WEBER

MO STATE CERTIFICATE OF AUTHORITY #001444 ENGINEERING

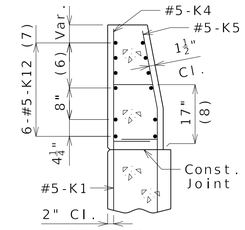


SECTION A-A

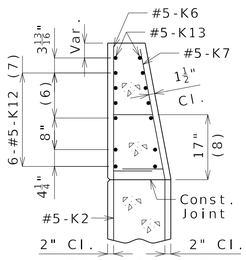


SECTION B-B

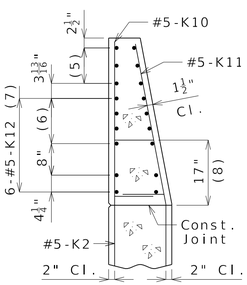


SECTION C-C

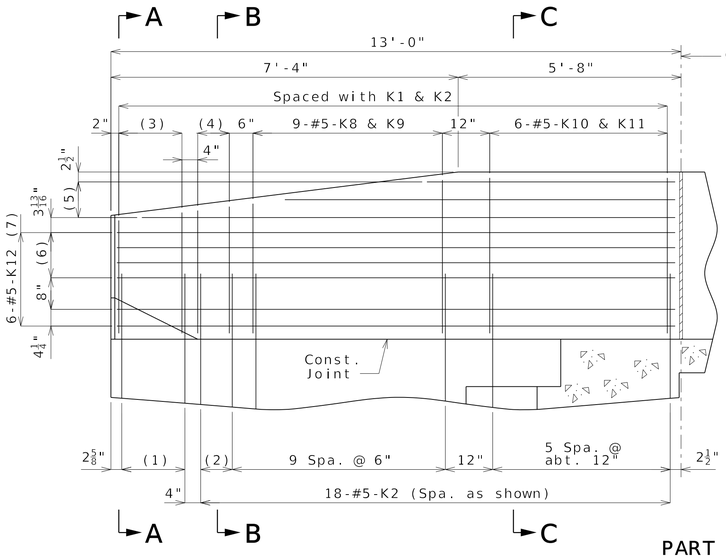


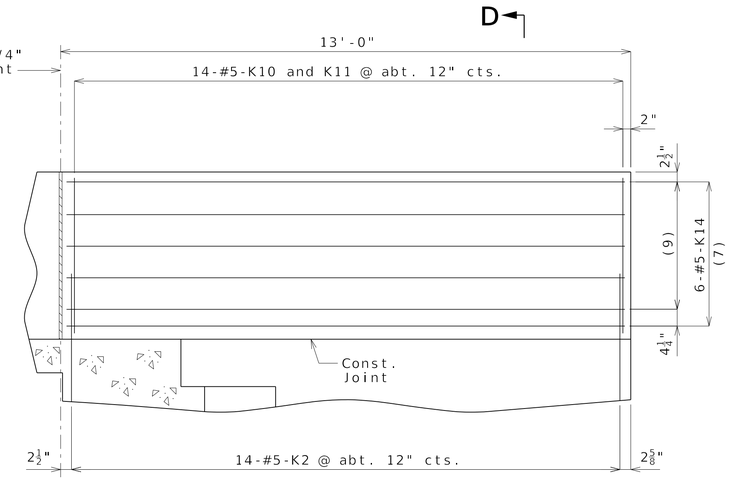


PART ELEVATION

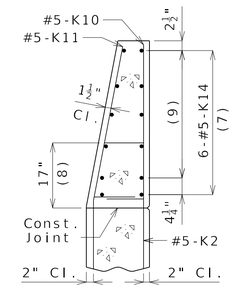


SECTION D-D

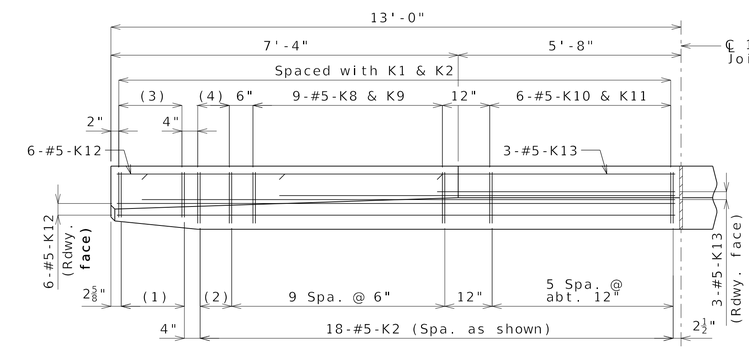


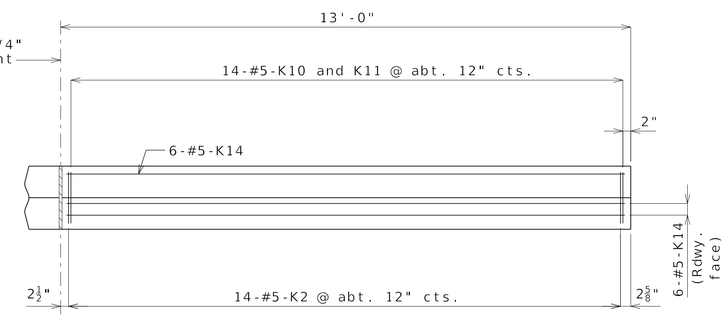


PART PLAN

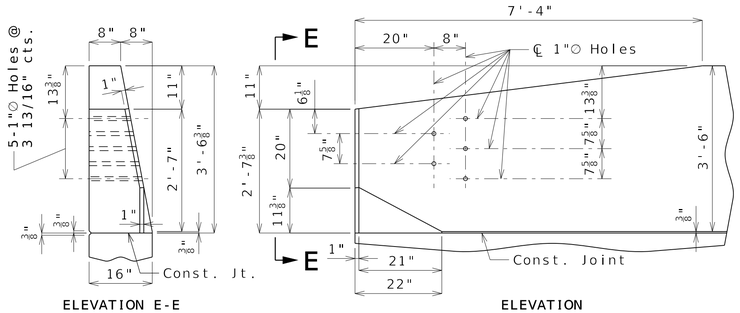


ELEVATION E-E

ELEVATION

(1) 5-#5-K1 @ 4" cts.

(2) 2 spaces @ 4"

(3) 5-#5-K4 & K5

(4) 3-#5-K6 & K7

(5) 3-#5-K13 or K15 @ 4½" cts., each face

(6) 3 spaces @ 3 13/16"

(7) Spaced as shown, each face

(8) To top of bar

(9) 4 Spa. @ abt. 8" cts.

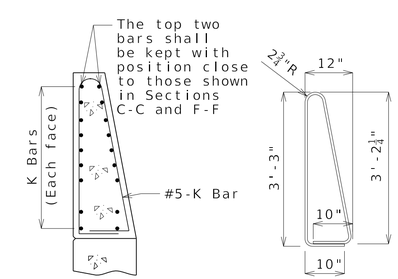


K10-K11 BAR PERMISSIBLE ALTERNATE SHAPE

(Other K bars not shown for clarity)

The K10-K11 bar combination may be furnished as one bar as shown, at the contractor's option.

All dimensions are out to out.

* Transition to zero at Type A curb for gutter lines to match.

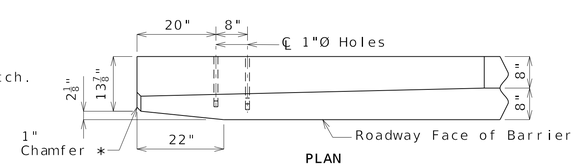


PLAN

DETAILS OF GUARD RAIL ATTACHMENT

(Near End Bent No. 1 only)

## General Notes:

Concrete traffic barrier delineators shall be placed on top of the barrier as shown on Missouri Standard Plan 617.10 and in accordance with Sec 617. Delineators on bridges with two-lane, two-way traffic shall have retroreflective sheeting on both sides.

**Reinforcing Steel:**
Minimum clearance to reinforcing steel shall be 1 1/2" except as shown for bars embedded into end bent.

# TYPE D BARRIER (RIGHT) AT END BENTS

Detailed Jan 2025
Checked Jan 2025

Note: This drawing is not to scale. Follow dimensions.



STATE OF MISSOURI
OSMAN MOHAMMED
NUMBER PE-2021003145
PROFESSIONAL ENGINEER

02/20/2025 8:18:34 AM
Osman Mohammed
MO PE-2021003145

| DATE PREPARED | |
|---|---|
| 19-FEB-2025 | |
| ROUTE | STATE |
| 54WB | MO |
| DISTRICT | SHEET NO. |
| BR | 22 |
| COUNTY | |
| CALLAWAY | |
| JOB NO. | |
| JST0021 | |
| CONTRACT ID. | |
| PROJECT NO. | |
| BRIDGE NO. | |
| A9556 | |

| DATE | DESCRIPTION |
|---|---|
| 01/21/2025 | REV. A - FINAL REVIEW |
| 02/19/2025 | REV. 0 - RELEASED FOR CONSTRUCTION |

MISSOURI HIGHWAYS AND TRANSPORTATION COMMISSION
105 WEST CAPITOL
JEFFERSON CITY, MO 65102
1-888-ASK-MODOT (1-888-275-6636)

MoDOT IMPROVE I-70 DB PROJECT 1

MILLSTONE WEBER

MO STATE CERTIFICATE OF AUTHORITY #001444 ENGINEERING

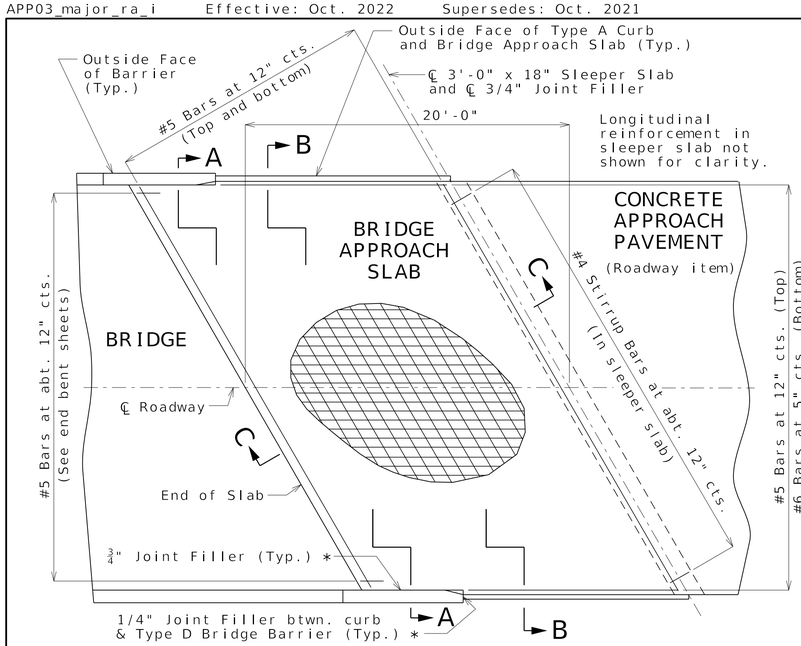


PART PLAN SHOWING REINFORCEMENT AT END BENT NO. 1

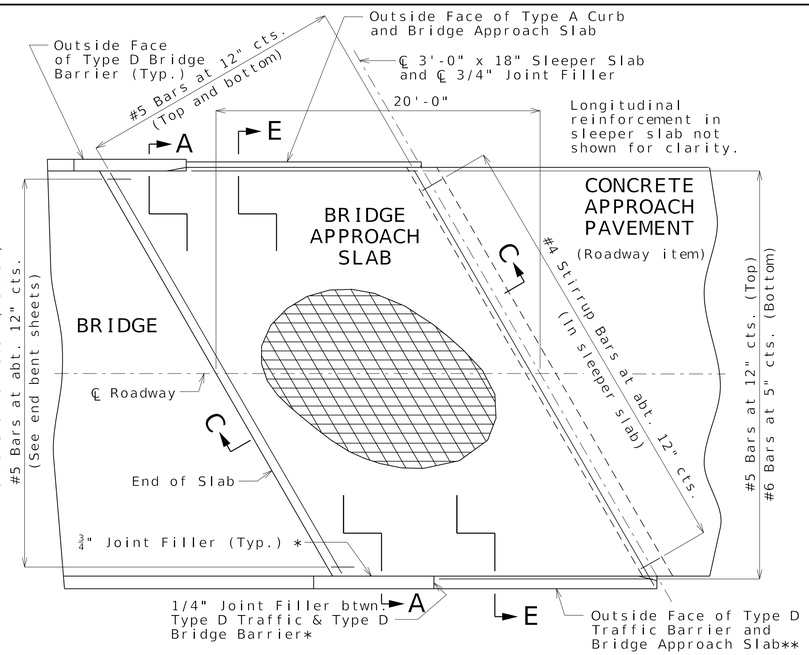


PART PLAN SHOWING REINFORCEMENT AT END BENT NO. 3

Additional moment slab steel not shown for clarity.
** See Missouri Standard Plan 617.10M for details of Type D Traffic Barrier and Moment Slab reinforcement.

## General Notes:

All concrete for the bridge approach slab and sleeper slab shall be in accordance with Sec 503 (f'c = 4,000 psi).

The reinforcing steel in the bridge approach slab and the sleeper slab shall be epoxy coated Grade 60 with fy = 60,000 psi.

Drain pipe may be either 6" diameter corrugated metallic-coated pipe underdrain, 4" diameter corrugated polyvinyl chloride (PVC) drain pipe, or 4" diameter corrugated polyethylene (PE) drain pipe.

Minimum clearance to reinforcing steel shall be 1 1/2", unless otherwise shown.

The reinforcing steel in the bridge approach slab and the sleeper slab shall be continuous. The transverse reinforcing steel may be made continuous by providing a minimum lap splice of 29 inches for #5 bars and 44 inches for #6 bars, or by mechanical bar splice.

All joint filler shall be in accordance with Sec 1057 for preformed fiber expansion joint filler except as noted.

For concrete approach pavement details, see roadway plans.

See Missouri Standard Plan 609.00 for details of Type A curb.

* Seal joint between vertical face of approach slab and wing with sealant in accordance with Sec 717 for silicone joint sealant for saw cut and formed joints.

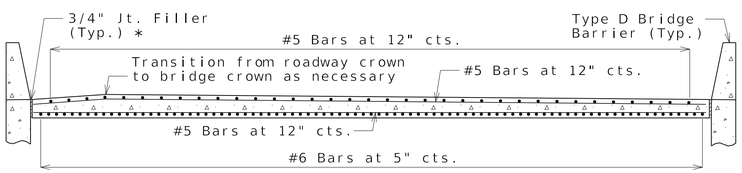


SECTION A-A

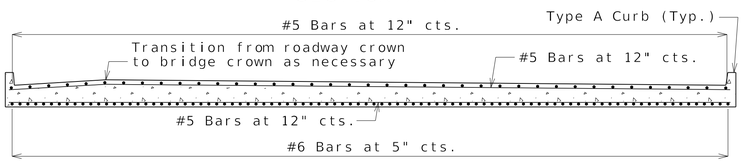


SECTION B-B

With the approval of the engineer, the contractor may crown the bottom of the approach slab to match the crown of the roadway surface.

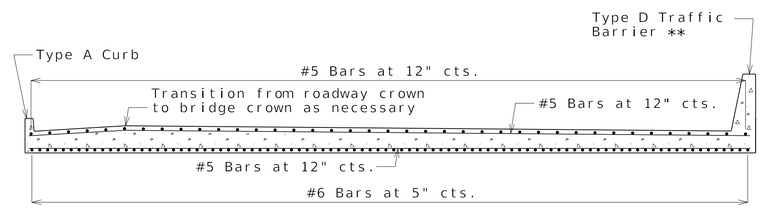


SECTION E-E

With the approval of the engineer, the contractor may crown the bottom of the approach slab to match the crown of the roadway surface.

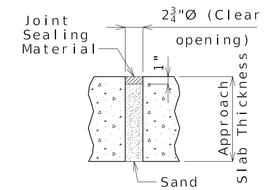


UNDERSEAL ACCESS HOLE DETAIL
(If required)

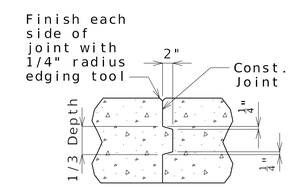


CONSTRUCTION JOINT DETAIL

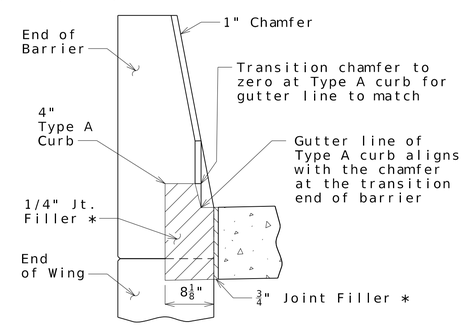


SECTION BETWEEN CURB AND BARRIER

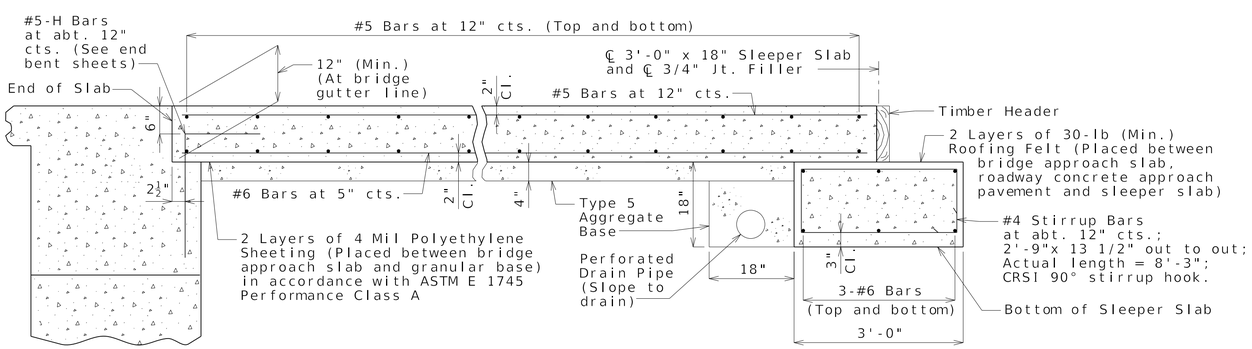


SECTION C-C

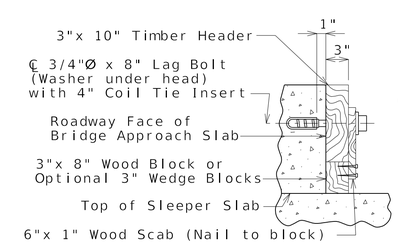


SECTION D-D

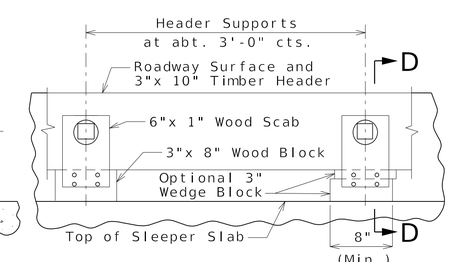


PART ELEVATION

DETAILS OF TIMBER HEADER

Remove timber header when concrete pavement is placed.

# BRIDGE APPROACH SLAB (MAJOR)

Note: This drawing is not to scale. Follow dimensions.

Detailed Jan 2025
Checked Jan 2025



STATE OF MISSOURI
OSMAN MOHAMMED
NUMBER PE-2021003145
PROFESSIONAL ENGINEER
02/20/2025 8:18:34 AM
Osman Mohammed
MO PE-2021003145

| | |
|---|---|
| DATE PREPARED | 19-FEB-2025 |
| ROUTE | 54WB |
| STATE | MO |
| DISTRICT | BR |
| SHEET NO. | 23 |
| COUNTY | CALLAWAY |
| JOB NO. | JST0021 |
| CONTRACT ID. | |
| PROJECT NO. | |
| BRIDGE NO. | A9556 |

| DATE | DESCRIPTION |
|---|---|
| 01/21/2025 | REV. A - FINAL REVIEW |
| 02/19/2025 | REV. 0 - RELEASED FOR CONSTRUCTION |

MISSOURI HIGHWAYS AND TRANSPORTATION COMMISSION
105 WEST CAPITOL
JEFFERSON CITY, MO 65102
1-888-ASK-MODOT (1-888-275-6636)

MoDOT IMPROVE I-70 DB PROJECT 1

MILLSTONE WEBER

MO STATE CERTIFICATE OF AUTHORITY #001444 ENGINEERING

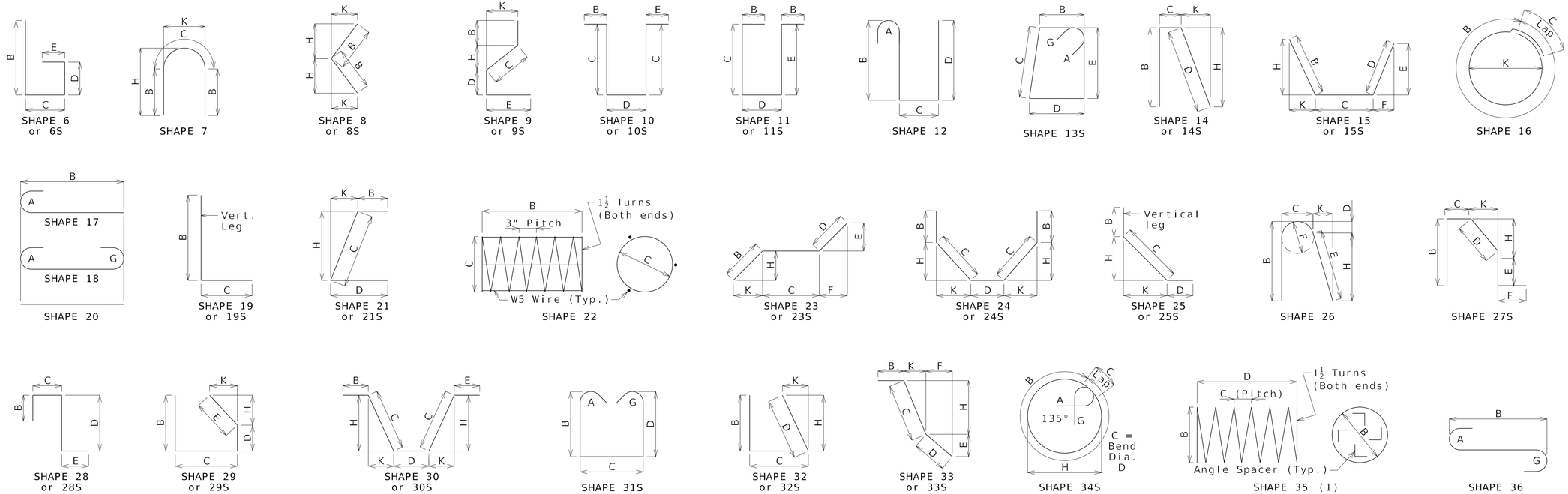


## Finished Bend Diameters D and Hook Dimensions

### Standard Pin Bend Shapes

| Size | Case | D | A or G 90° | A or G 180° | J 180° |
|---|---|---|---|---|---|
| #4 | 1 | 3" | 8" | 6" | 4" |
| #5 | 1 | 3¾" | 10" | 7" | 5" |
| #6 | 1 | 4½" | 12" | 8¼" | 6" |
| #7 | 2 | 5¼" | 14" | 9¾" | 7" |
| | 3 | 7" | 15" | 11½" | 8¾" |
| #8 | 2 | 6" | 16" | 11" | 8" |
| | 3 | 8" | 17" | 13¼" | 10" |
| #9 | 1 | 9½" | 19½" | 15½" | 11¾" |
| #10 | 1 | 10¾" | 22" | 17½" | 13¼" |
| #11 | 1 | 12" | 24½" | 19½" | 14⅞" |
| #14 | 1 | 18¼" | 31¼" | 27½" | 21⅝" |
| #18 | 1 | 24" | 41½" | 36¼" | 28½" |

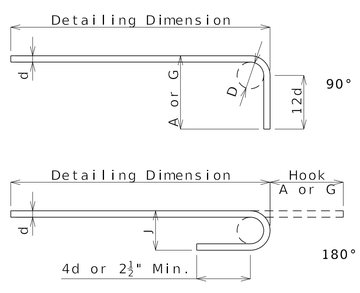


### Stirrup Pin Bend Shapes (S)

| Size | Case | D | A or G 90° | A or G 135° | A or G 180° | H 135° | J 180° |
|---|---|---|---|---|---|---|---|
| #4 | 2 | 2" | 4½" | 4½" | 5" | 2⅞" | 3" |
| | 3 | 3" | 5" | 5¼" | 6" | 3" | 4" |
| #5 | 2 | 2½" | 5¾" | 5¾" | 5¾" | 3⅝" | 3¾" |
| | 3 | 3¾" | 6¼" | 6½" | 7" | 3⅞" | 5" |
| #6 | 1 | 4½" | 12" | 7¾" | 8¼" | 4⅝" | 6" |

Applicable for all grades of steel.

Case 1 applies to all reinforcement. Case 2 applies to all reinforcement except for galvanized bars. Case 3 applies to galvanized bars only.

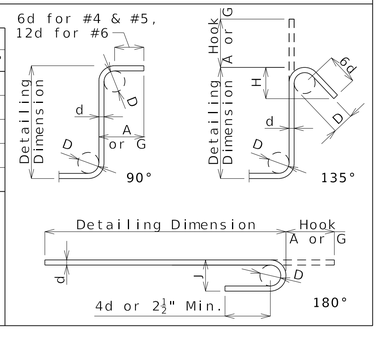


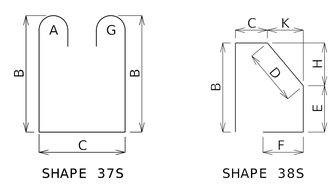


BENDING DIAGRAMS

All dimensions are out to out.

Shapes ending with an S shall be bent in accordance with stirrup pin bend shapes.

Unless otherwise noted, finished bending diameter D is the same for all bends of a shape.

(1) Shall be a deformed or plain spiral bar or wire.

Four angle or channel spacers are required for each column spiral. Spacers are to be placed on inside of spirals. Length and weight of column spirals do not include splices or spacers.

## Reinforcing Steel Totals (Pounds)

| | Size | Substructure Plain | Substructure Epoxy | Superstructure Slab Plain | Superstructure Slab Epoxy | Superstructure Barrier | Superstructure Slip Form | Entire Bridge Plain | Entire Bridge Epoxy |
|---|---|---|---|---|---|---|---|---|---|
| By Size | W5 | 0 | 0 | 0 | 0 | 0 | 0 | 0 | 0 |
| | 4 | 20 | 978 | 0 | 0 | 0 | 0 | 20 | 978 |
| | 5 | 1966 | 1861 | 0 | 1239 | 8310 | 332 | 1966 | 11742 |
| | 6 | 4069 | 7322 | 0 | 26456 | 0 | 0 | 4069 | 33778 |
| | 7 | 0 | 1041 | 0 | 3980 | 0 | 0 | 0 | 5021 |
| | 8 | 0 | 1114 | 0 | 0 | 0 | 0 | 0 | 1114 |
| | 9 | 1974 | 0 | 0 | 0 | 0 | 0 | 1974 | 0 |
| | 10 | 0 | 2920 | 0 | 0 | 0 | 0 | 0 | 2920 |
| | 11 | 0 | 0 | 0 | 0 | 0 | 0 | 0 | 0 |
| | 14 | 0 | 0 | 0 | 0 | 0 | 0 | 0 | 0 |
| | 18 | 0 | 0 | 0 | 0 | 0 | 0 | 0 | 0 |
| By Type | | 8,029 | 15,236 | 0 | 31,675 | 8,310 | 332 | 8,029 | 55,553 |

All superstructure reinforcing steel shall be epoxy coated unless otherwise specified.

# BAR BENDING DIAGRAMS

Detailed Aug 2024
Checked Dec 2024

Note: This drawing is not to scale. Follow dimensions.



STATE OF MISSOURI
OSMAN MOHAMMED
NUMBER PE-2021003145
PROFESSIONAL ENGINEER

02/20/2025 8:18:34 AM
Osman Mohammed
MO PE-2021003145

| DATE PREPARED | |
|---|---|
| 19-FEB-2025 | |
| ROUTE 54WB | STATE MO |
| DISTRICT BR | SHEET NO. 24 |
| COUNTY CALLAWAY | |
| JOB NO. JST0021 | |
| CONTRACT ID. | |
| PROJECT NO. | |
| BRIDGE NO. A9556 | |

| DATE | DESCRIPTION |
|---|---|
| 01/21/2025 | REV. A - FINAL REVIEW |
| 02/19/2025 | REV. 0 - RELEASED FOR CONSTRUCTION |

MISSOURI HIGHWAYS AND TRANSPORTATION COMMISSION
105 WEST CAPITOL
JEFFERSON CITY, MO 65102
1-888-ASK-MODOT (1-888-275-6636)

MoDOT IMPROVE I-70 DB PROJECT 1

MILLSTONE WEBER

MO STATE CERTIFICATE OF AUTHORITY #001444 ENGINEERING

# Bill of Reinforcing Steel

| No. Req. | Size/ Mark | Location | Codes C | Codes SH | Codes V | Dimensions B ft in. | Dimensions C ft in. | Dimensions D ft in. | Dimensions E ft in. | Dimensions F ft in. | Dimensions H ft in. | Dimensions K ft in. | Nom. Length ft in. | Actual Length ft in. | Weight lb |
|---|---|---|---|---|---|---|---|---|---|---|---|---|---|---|---|
| | | SUBSTRUCTURE | | | | | | | | | | | | | C 1 10 |
| | | END BENT NO. 1 | | | | | | | | | | | | | C 1 9 |
| 9 | 6 F100 | WING BRACE | E | 23 | | 2 3.000 | 5 3.000 | 14.000 | 9.875 | 9.875 | 19.500 | 18.625 | 8 8 | 8 7 | 116 |
| 3 | 6 F101 | DIAPHRAGM | E | 19 | | 5 10.875 | 2 4.000 | | | | | | 8 3 | 8 1 | 36 |
| 10 | 6 F102 | DIAPHRAGM | E | 23 | | 2 3.000 | 5 3.000 | 14.000 | 9.875 | 9.875 | 18.625 | 19.500 | 8 8 | 8 7 | 129 |
| 3 | 6 F103 | DIAPHRAGM | E | 19 | | 5 10.875 | 2 4.000 | | | | | | 8 3 | 8 1 | 36 |
| | | | | | | | | | | | | | | | C 1 10 |
| 8 | 10 H100 | BEAM | E | 20 | | 42 5.000 | | | | | | | 42 5 | 42 5 | 1460 |
| 4 | 6 H101 | BEAM | E | 20 | | 42 5.000 | | | | | | | 42 5 | 42 5 | 255 |
| 3 | 6 H102 | DIAPHRAGM | E | 20 | | 7 9.625 | | | | | | | 7 10 | 7 10 | 35 |
| 9 | 6 H103 | DIAPHRAGM | E | 20 | | 10 7.000 | | | | | | | 10 7 | 10 7 | 143 |
| 2 | 6 H104 | DIAPHRAGM | E | 20 | | 23.875 | | | | | | | 2 0 | 2 0 | 6 |
| 4 | 6 H105 | BEAM | E | 20 | | 42 5.000 | | | | | | | 42 5 | 42 5 | 347 |
| 4 | 7 H106 | DIAPHRAGM | E | 20 | | 42 5.125 | | | | | | | 42 5 | 42 5 | 347 |
| 6 | 6 H107 | DIAPHRAGM | E | 20 | | 3 9.000 | | | | | | | 3 9 | 3 9 | 34 |
| 11 | 6 H108 | WINGWALL | E | 15 | | 12 8.125 | 9.000 | | | | 12 8.125 | 3.625 | 13 5 | 13 3 | 219 |
| 21 | 6 H109 | WINGWALL | E | 20 | | 12 8.125 | | | | | | | 12 8 | 12 8 | 400 |
| 4 | 8 H110 | WINGWALL | E | 15 | | 12 8.125 | 9.000 | | | | 12 8.125 | 3.625 | 13 8 | 13 6 | 144 |
| 8 | 8 H111 | WINGWALL | E | 20 | | 12 8.125 | | | | | | | 12 8 | 12 8 | 271 |
| 10 | 6 H112 | WINGWALL | E | 21 | | | 12 8.875 | 9.000 | | | 12 8.875 | 3.625 | 13 6 | 13 2 | 198 |
| 4 | 8 H113 | WINGWALL | E | 21 | | | 12 | 12.000 | | | 12 8.875 | 3.625 | 13 9 | 13 4 | 142 |
| 4 | 6 H114 | BEAM | E | 20 | | 17 8.500 | | | | | | | 17 9 | 17 9 | 107 |
| 4 | 5 H115 | STRAND TIE | E | 20 | | 5 8.000 | | | | | | | 5 8 | 5 8 | 24 |
| | | | | | | | | | | | | | | | C 1 11 |
| 28 | 5 U100 | BEAM | E | 37S | | 5 11.000 | 2 9.000 | | | | | | 15 7 | 15 4 | 448 |
| 28 | 4 U101 | BEAM | E | 13S | | 2 9.000 | 3 2.000 | 2 9.000 | 3 2.000 | | | | 12 7 | 12 4 | 231 |
| 35 | 6 U102 | BEAM | E | 19 | | 2 5.000 | 2 9.000 | | | | | | 5 2 | 5 0 | 263 |
| 35 | 5 U103 | DIPHRAGM | E | 37S | | 2 3.000 | 2 3.000 | | | | | | 7 9 | 7 6 | 274 |
| 54 | 6 U104 | DIAPHRAGM | E | 19S | | 3 4.500 | 4 6.500 | | | | | | 7 11 | 7 9 | 629 |
| 40 | 5 U105 | DIAPHRAGM | E | 19S | | 2 0.000 | 15.000 | | | | | | 3 3 | 3 2 | 132 |
| 14 | 4 U106 | BEAM | E | 10S | | | 12.000 | 2 9.000 | | | | | 4 9 | 4 7 | 43 |
| 14 | 6 V100 | BEAM | E | 17 | | 5 11.000 | | | | | | | 6 7 | 6 7 | 138 |
| 20 | 6 V101 | DIAPHRAGM | E | 20 | | 22.000 | | | | | | | 22 | 22 | 55 |
| 20 | 6 V102 | WINGWALL | E | 20 | V | 7 3.125 | | | | | | | 7 3 | 7 3 | 223 |
| | | INCR. B = 0.48" | | | | 7 7.375 | | | | | | | 7 7 | 7 7 | |
| 2 | 6 V103 | WINGWALL | E | 20 | | 7 2.750 | | | | | | | 7 3 | 7 3 | 22 |
| 20 | 6 V104 | WINGWALL | E | 20 | V | 6 7.750 | | | | | | | 6 8 | 6 8 | 205 |
| | | INCR. B = 0.48" | | | | 7 0.000 | | | | | | | 7 0 | 7 0 | |
| 2 | 6 V105 | WINGWALL | E | 20 | | 6 7.375 | | | | | | | 6 7 | 6 7 | 20 |
| | | INT. BENT NO. 2 | | | | | | | | | | | | | |
| 21 | 6 D200 | KEY DOWEL | E | 20 | | 2 6.000 | | | | | | | 2 6 | 2 6 | 79 |
| 2 | 6 H200 | WEB WALL | | 18 | | 35 4.000 | | | | | | | 36 8 | 36 8 | 110 |
| 36 | 6 H201 | WEB WALL | | 20 | | 35 4.000 | | | | | | | 35 4 | 35 4 | 1911 |
| 38 | 6 H202 | WEB WALL | | 7 | | 20.000 | 4 1.875 | | | | 2 11.875 | 2 7.750 | 5 8 | 5 7 | 319 |
| 6 | 9 H203 | BEAM | | 18 | | 39 3.000 | | | | | | | 41 9 | 41 9 | 852 |
| 7 | 9 H204 | BEAM | | 17 | | 28 4.000 | | | | | | | 29 7 | 29 7 | 704 |
| 7 | 9 H205 | BEAM | | 17 | | 16 4.000 | | | | | | | 17 7 | 17 7 | 418 |
| 10 | 6 H206 | BEAM | | 20 | | 39 3.000 | | | | | | | 39 3 | 39 3 | 590 |
| 2 | 6 H207 | BEAM | | 20 | | 14 0.000 | | | | | | | 14 0 | 14 0 | 42 |
| 15 | 6 H208 | BEAM | | 10S | | | 22.000 | 3 1.750 | | | | | 6 10 | 6 6 | 146 |
| 17 | 6 U200 | BEAM | | 13S | | 3 3.000 | 3 5.375 | 3 3.000 | 3 5.375 | | | | 14 9 | 14 3 | 364 |
| 21 | 6 U201 | BEAM | | 13S | | 3 3.000 | 3 0.000 | 3 3.000 | 3 0.000 | | | | 13 10 | 13 4 | 421 |
| 6 | 4 U202 | BEAM | | 10S | | | 12.000 | 3 3.000 | | | | | 5 3 | 5 1 | 20 |
| 4 | 6 U203 | BEAM | | 10S | | | 3 5.375 | 3 3.000 | | | | | 10 2 | 9 10 | 59 |
| 8 | 6 U204 | BEAM | | 10S | | | 3 0.000 | 3 3.000 | | | | | 9 3 | 8 11 | 107 |
| 26 | 5 V200 | WEB WALL | | 20 | | 21 2.000 | | | | | | | 21 2 | 21 2 | 574 |
| 56 | 5 V201 | WEB WALL | | 19S | | 21 2.000 | 2 9.000 | | | | | | 23 11 | 23 10 | 1392 |

# Bill of Reinforcing Steel

| No. Req. | Size/ Mark | Location | Codes C | Codes SH | Codes V | Dimensions B ft in. | Dimensions C ft in. | Dimensions D ft in. | Dimensions E ft in. | Dimensions F ft in. | Dimensions H ft in. | Dimensions K ft in. | Nom. Length ft in. | Actual Length ft in. | Weight lb |
|---|---|---|---|---|---|---|---|---|---|---|---|---|---|---|---|
| | | END BENT NO. 3 | | | | | | | | | | | | | C 1 129 |
| 9 | 6 F300 | WING BRACE | E | 23 | | 2 3.000 | 5 3.000 | 14.000 | 9.875 | 9.875 | 19.500 | 18.625 | 8 8 | 8 7 | 116 |
| 3 | 6 F301 | DIAPHRAGM | E | 19 | | 5 10.875 | 2 4.000 | | | | | | 8 3 | 8 1 | 36 |
| 10 | 6 F302 | DIAPHRAGM | E | 23 | | 2 3.000 | 5 3.000 | 14.000 | 9.875 | 9.875 | 18.625 | 19.500 | 8 8 | 8 7 | 129 |
| 3 | 6 F303 | DIAPHRAGM | E | 19 | | 5 10.875 | 2 4.000 | | | | | | 8 3 | 8 1 | 36 |
| | | | | | | | | | | | | | | C 1 116 | |
| 8 | 10 H300 | BEAM | E | 20 | | 42 5.000 | | | | | | | 42 5 | 42 5 | 1460 |
| 4 | 6 H301 | BEAM | E | 20 | | 42 5.000 | | | | | | | 42 5 | 42 5 | 255 |
| 3 | 6 H302 | DIAPHRAGM | E | 20 | | 7 9.625 | | | | | | | 7 10 | 7 10 | 35 |
| 9 | 6 H303 | DIAPHRAGM | E | 20 | | 10 7.000 | | | | | | | 10 7 | 10 7 | 143 |
| 2 | 6 H304 | DIAPHRAGM | E | 20 | | 23.875 | | | | | | | 2 0 | 2 0 | 6 |
| 4 | 6 H305 | BEAM | E | 20 | | 42 5.000 | | | | | | | 42 5 | 42 5 | 255 |
| 4 | 7 H306 | DIAPHRAGM | E | 20 | | 42 5.125 | | | | | | | 42 5 | 42 5 | 347 |
| 6 | 6 H307 | DIAPHRAGM | E | 20 | | 3 9.000 | | | | | | C 1 199 | 3 9 | 3 9 | 34 |
| 11 | 6 H308 | WINGWALL | E | 15 | | 12 8.125 | 9.000 | | | | 12 8.125 | 3.625 | 13 5 | 13 3 | 219 |
| 21 | 6 H309 | WINGWALL | E | 20 | | 12 8.125 | | | | | | | 12 8 | 12 8 | 400 |
| 4 | 8 H310 | WINGWALL | E | 15 | | 12 8.125 | 12.000 | | | | 12 8.125 | 3.625 | 13 8 | 13 6 | 144 |
| 8 | 8 H311 | WINGWALL | E | 20 | | 12 8.125 | | | | | | | 12 8 | 12 8 | 271 |
| 10 | 6 H312 | WINGWALL | E | 21 | | | 12 8.875 | 9.000 | | | 12 8.875 | 3.625 | 13 6 | 13 2 | 198 |
| 4 | 8 H313 | WINGWALL | E | 21 | | | 12 8.875 | 12.000 | | | 12 8.875 | 3.625 | 13 9 | 13 4 | 142 |
| 4 | 6 H314 | BEAM | E | 20 | | 17 8.500 | | | | | | | 17 9 | 17 9 | 107 |
| 4 | 5 H315 | STRAND TIE | E | 20 | | 5 8.000 | | | | | | | 5 8 | 5 8 | 24 |
| | | | | | | | | | | | | | | C 1 218 | |
| 28 | 5 U300 | BEAM | E | 37S | | 5 11.000 | 2 9.000 | | | | | | 15 7 | 15 4 | 448 |
| 28 | 4 U301 | BEAM | E | 13S | | 2 9.000 | 3 2.000 | 2 9.000 | 3 2.000 | | | | 12 7 | 12 4 | 231 |
| 35 | 6 U302 | BEAM | E | 19 | | 2 5.000 | 2 9.000 | | | | | | 5 2 | 5 0 | 263 |
| 35 | 5 U303 | DIPHRAGM | E | 37S | | 2 3.000 | 2 3.000 | | | | | | 7 9 | 7 6 | 274 |
| 54 | 6 U304 | DIAPHRAGM | E | 19S | | 3 4.500 | 4 6.500 | | | | | | 7 11 | 7 9 | 629 |
| 40 | 5 U305 | DIAPHRAGM | E | 19S | | 2 0.000 | 15.000 | | | | | | 3 3 | 3 2 | 132 |
| 14 | 4 U306 | BEAM | E | 10S | | | 12.000 | 2 9.000 | | | | | 4 9 | 4 7 | 43 |
| 14 | 6 V300 | BEAM | E | 17 | | 5 11.000 | | | | | | | 6 7 | 6 7 | 138 |
| 20 | 6 V301 | DIAPHRAGM | E | 20 | | 23.000 | | | | | | | 23 | 23 | 58 |
| 20 | 6 V302 | WINGWALL | E | 20 | | 6 11.750 | | | | | | | 7 0 | 7 0 | 210 |
| 2 | 6 V303 | WINGWALL | E | 20 | | 7 0.625 | | | | | | | 7 1 | 7 1 | 21 |
| 20 | 6 V304 | WINGWALL | E | 20 | | 7 7.375 | | | | | | | 7 7 | 7 7 | 228 |
| 2 | 6 V305 | WINGWALL | E | 20 | | 7 8.250 | | | | | | | 7 8 | 7 8 | 23 |
| | | SUPERSTRUCTURE | | | | | | | | | | | | | |
| | | DIAPH. AT INT. BENT NO. 2 | | | | | | | | | | | | | |
| 6 | 6 H220 | DIAPHRAGM | E | 20 | | 7 10.625 | | | | | | | 7 11 | 7 11 | 71 |
| 18 | 6 H221 | DIAPHRAGM | E | 20 | | 10 0.000 | | | | | | | 10 0 | 10 0 | 120 |
| 6 | 6 H222 | DIAPHRAGM | E | 20 | | 7 0.000 | | | | | | | 7 0 | 7 0 | 63 |
| 4 | 5 H223 | DIAPHRAGM | E | 20 | | 4 6.000 | | | | | | | 4 6 | 4 6 | 19 |
| 4 | 5 H224 | DIAPHRAGM | E | 20 | | 5 8.000 | | | | | | | 5 8 | 5 8 | 24 |
| 48 | 4 U220 | DIAPHRAGM | E | 28S | | | 18.000 | 3 5.000 | 2 3.000 | | | | 7 2 | 7 0 | 224 |
| 12 | 6 U221 | DIAPHRAGM | E | 28S | | | 18.000 | 2 6.000 | 2 3.000 | | | | 6 3 | 5 11 | 107 |
| 12 | 6 U222 | DIAPHRAGM | E | 28S | | | 18.000 | 3 5.000 | 2 3.000 | | | | 7 2 | 6 10 | 123 |
| 4 | 5 U223 | DIAPHRAGM | E | 6S | | 5 0.000 | 22.000 | 15.750 | | | | | 8 2 | 7 11 | 33 |
| 8 | 6 U224 | DIAPHRAGM | E | 28S | V | | 18.000 | 2 6.000 | 2 3.000 | | | | 6 3 | 5 11 | 71 |
| 16 | 4 U225 | DIAPHRAGM | E | 6S | | 5 0.000 | 22.000 | 15.750 | | | | | 8 2 | 8 0 | 86 |
| | | INCR. B = 1.67" | | | | 5 5.000 | 22.000 | 20.750 | | | | | | | |
| | | INCR. D = 1.67" | | | | | | | | | | | | | |
| 8 | 5 V220 | DIAPHRAGM | E | 20 | | 3 5.750 | | | | | | | 3 6 | 3 6 | 29 |
| | | SLAB | | | | | | | | | | | | | |
| 263 | 6 S100 | SLAB | E | 20 | | 42 2.000 | | | | | | | 42 2 | 42 2 | 16657 |
| 264 | 5 S101 | SLAB | E | 20 | | 4 6.000 | | | | | | | 4 6 | 4 6 | 1239 |
| 108 | 6 S102 | SLAB | E | 20 | | 47 2.000 | | | | | | | 47 2 | 47 2 | 7651 |
| 66 | 7 S103 | SLAB | E | 20 | | 29 6.000 | | | | | | | 29 6 | 29 6 | 3980 |
| 30 | 6 S104 | SLAB | E | 20 | | 47 8.000 | | | | | | | 47 8 | 47 8 | 2148 |

Nominal lengths are based on out to out dimensions shown in bending diagrams and are listed to the nearest inch for fabricator's use. Actual lengths are measured along centerline bar to the nearest inch. Weights are based on actual lengths.

For bending diagrams and steel reinforcing totals, see Sheet No. 24.

Detailed Jan 2025
Checked Jan 2025

All bars shall be Grade 60.

C 1 REVISED 03-14-2025

Note: This drawing is not to scale. Follow dimensions.

Codes: C = Required coatings, where E = Epoxy Coated and G = Galvanized.

SH = Required shape, see bending diagrams.

V = Sets of varied bars and number of bars of each length. Bar dimensions vary in equal increments between dimensions shown on this line and the following line and the actual length dimension shown on this line and the following line vary by the specified increment.

## BILL OF REINFORCING STEEL (1 OF 2)



STATE OF MISSOURI
OSMAN MOHAMMED
NUMBER PE-2021003145
PROFESSIONAL ENGINEER

03/14/2025 2:26:41 PM
Osman Mohammed
MO PE-2021003145

DATE PREPARED
14-MAR-2025

| ROUTE | STATE |
|---|---|
| 54WB | MO |
| DISTRICT | SHEET NO. |
| BR | 25 |

COUNTY
CALLAWAY

JOB NO.
JST0021

CONTRACT ID.

PROJECT NO.

BRIDGE NO.
A9556

| DESCRIPTION | DATE |
|---|---|
| REV. A - FINAL REVIEW | 01/21/2025 |
| REV. 0 - RELEASED FOR CONSTRUCTION | 02/19/2025 |
| REV. 1 - NDC-013 - REVISED REINFORCING | 03/14/2025 |

MISSOURI HIGHWAYS AND TRANSPORTATION COMMISSION
105 WEST CAPITOL
JEFFERSON CITY, MO 65102
1-888-ASK-MODOT (1-888-275-6636)

MoDOT IMPROVE I-70 DB PROJECT 1

MILLSTONE WEBER

MO STATE CERTIFICATE OF AUTHORITY #001444 ENGINEERING

# Bill of Reinforcing Steel

| No. Req. | Size/ Mark | Location | Codes C | Codes SH | Codes V | Dimensions B ft in. | C ft in. | D ft in. | E ft in. | F ft in. | H ft in. | K ft in. | Nom. Length ft in. | Actual Length ft in. | Weight lb |
|---|---|---|---|---|---|---|---|---|---|---|---|---|---|---|---|
| | | SUPERSTRUCTURE | | | | | | | | | | | | | |
| | | BARRIER | | | | | | | | | | | | | |
| 272 | 5 R1 | TYPE D BARRIER | E | 26S | | 3 3.000 | 5.500 | 2.250 | 3 1.375 | 5.500 | 3 0.750 | 6.750 | 6 8 | 6 7 | 1868 |
| 272 | 5 R2 | TYPE D BARRIER | E | 19S | | 20.500 | 9.500 | | | | | | 2 6 | 2 5 | 686 |
| 272 | 5 R3 | TYPE D BARRIER | E | 27S | | | 9.500 | 15.250 | 5.000 | 12.000 | 15.000 | 3.000 | 3 6 | 3 4 | 946 |
| 40 | 5 R4 | TYPE D BARRIER | E | 20 | | 11 8.000 | | | | | | | 11 8 | 11 6 | 487 |
| 40 | 5 R5 | TYPE D BARRIER | E | 20 | | 53 3.000 | | | | | | | 53 3 | 53 3 | 2222 |
| 15 | 5 K1 | TYPE D BARRIER | E | 27S | | 3 8.000 | 9.250 | 5.375 | 3 2.750 | | 5.250 | 1.000 | 8 1 | 7 11 | 124 |
| 68 | 5 K2 | TYPE D BARRIER | E | 27S | | 3 8.000 | 9.250 | 14.500 | 2 5.750 | | 14.250 | 2.750 | 8 2 | 7 11 | 561 |
| 15 | 5 K4 | TYPE D BARRIER | E | 19S | V | 2 4.250 | 10.000 | | | | | | 3 2 | 3 1 | 50 |
| | | INCR. B = 0.50" | | | | 2 6.250 | 10.000 | | | | | | 3 4 | 3 3 | |
| 15 | 5 K5 | TYPE D BARRIER | E | 38S | V | | | 18.500 | 9.500 | 8.250 | 18.000 | 4.000 | 3 0 | 2 9 | 44 |
| | | INCR. H = 0.5" | | | | | | 20.500 | 9.500 | 8.250 | 20.000 | 4.500 | 3 2 | 2 11 | |
| | | INCR. K = 0.125" | | | | | | | | | | | | | |
| 9 | 5 K6 | TYPE D BARRIER | E | 19S | | 2 6.750 | 10.000 | | | | | | 3 5 | 3 3 | 31 |
| 9 | 5 K7 | TYPE D BARRIER | E | 21S | | | 2 6.625 | 10.000 | | | 2 6.000 | 6.250 | 3 5 | 3 2 | 30 |
| 27 | 5 K8 | TYPE D BARRIER | E | 19S | V | 2 8.500 | 10.000 | | | | | | 3 7 | 3 5 | 103 |
| | | INCR. B = 0.75" | | | | 3 2.500 | 10.000 | | | | | | 4 1 | 3 11 | |
| 27 | 5 K9 | TYPE D BARRIER | E | 21S | V | | 2 8.500 | 10.000 | | | 2 7.750 | 6.750 | 3 6 | 3 4 | 94 |
| | | INCR. H = 0.75" | | | | | 3 2.500 | 10.000 | | | 3 1.750 | 7.750 | | | |
| | | INCR. K = 0.125" | | | | | | | | | | | | | |
| 32 | 5 K10 | TYPE D BARRIER | E | 19S | | 3 3.000 | 10.000 | | | | | | 4 1 | 4 0 | 134 |
| 32 | 5 K11 | TYPE D BARRIER | E | 21S | | | 3 3.000 | 10.000 | | | 3 2.250 | 7.750 | 4 1 | 3 10 | 128 |
| 24 | 5 K12 | TYPE D BARRIER | E | 20 | | 12 8.000 | | | | | | | 12 8 | 12 8 | 317 |
| 12 | 5 K13 | TYPE D BARRIER | E | 20 | V | 5 11.000 | | | | | | | 5 11 | 5 11 | 112 |
| | | INCR. B = 36" | | | | 11 11.000 | | | | | | | 11 11 | 11 11 | |
| 24 | 5 K14 | TYPE D BARRIER | E | 20 | | 12 8.000 | | | | | | | 12 8 | 12 8 | 317 |
| 6 | 5 K15 | TYPE D BARRIER | E | 20 | V | 5 11.000 | | | | | | | 5 11 | 5 11 | 56 |
| | | INCR. B = 36" | | | | 11 11.000 | | | | | | | 11 11 | 11 11 | |
| | | SLIP FORM BARRIER | | | | | | | | | | | | | |
| 24 | 5 C1 | TYPE D BARRIER | E | 20 | | 9 9.000 | | | | | | | 9 9 | 9 9 | 244 |
| 8 | 5 C2 | TYPE D BARRIER | E | 20 | | 10 6.000 | | | | | | | 10 6 | 10 6 | 88 |

Nominal lengths are based on out to out dimensions shown in bending diagrams and are listed to the nearest inch for fabricator's use. Actual lengths are measured along centerline bar to the nearest inch. Weights are based on actual lengths.

For bending diagrams and steel reinforcing totals, see Sheet No. 24.

All bars shall be Grade 60.

Codes: C = Required coatings, where E = Epoxy Coated and G = Galvanized.

SH = Required shape, see bending diagrams.

V = Sets of varied bars and number of bars of each length. Bar dimensions vary in equal increments between dimensions shown on this line and the following line and the actual length dimension shown on this line and the following line vary by the specified increment.

Detailed Jan 2025
Checked Jan 2025

## BILL OF REINFORCING STEEL (2 OF 2)

Note: This drawing is not to scale. Follow dimensions.



STATE OF MISSOURI
OSMAN MOHAMMED
NUMBER PE-2021003145
PROFESSIONAL ENGINEER

02/20/2025 8:18:34 AM
Osman Mohammed
MO PE-2021003145

DATE PREPARED: 19-FEB-2025
ROUTE: 54WB
STATE: MO
DISTRICT: BR
SHEET NO.: 26
COUNTY: CALLAWAY
JOB NO.: JST0021
CONTRACT ID.:
PROJECT NO.:
BRIDGE NO.: A9556

| DATE | DESCRIPTION |
|---|---|
| 01/21/2025 | REV. A - FINAL REVIEW |
| 02/19/2025 | REV. 0 - RELEASED FOR CONSTRUCTION |

MISSOURI HIGHWAYS AND TRANSPORTATION COMMISSION
105 WEST CAPITOL
JEFFERSON CITY, MO 65102
1-888-ASK-MODOT (1-888-275-6636)

MoDOT IMPROVE I-70 DB PROJECT 1

MILLSTONE WEBER

MO STATE CERTIFICATE OF AUTHORITY #001444 ENGINEERING

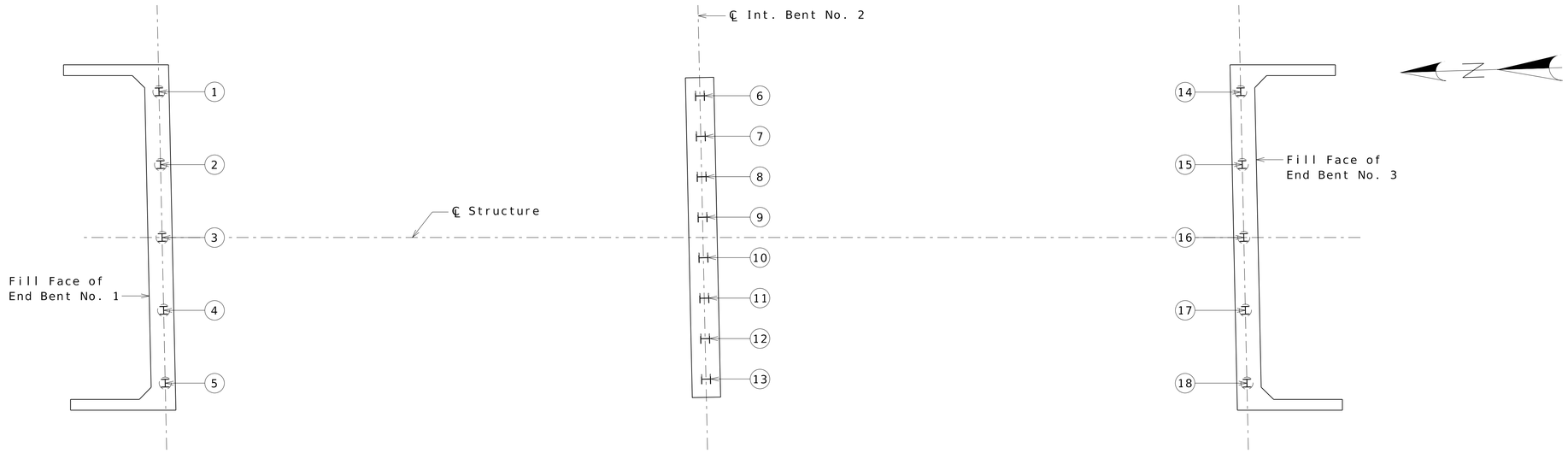


PART PLAN SHOWING PILE NUMBERING FOR RECORDING AS-BUILT PILE DATA

## AS-BUILT PILE DATA

| Pile No. | Length in Place (ft) | Computed Nominal Axial Compressive Resistance (kips) | Remarks |
|---|---|---|---|
| END BENT NO. 1 | | | |
| 1 | | | |
| 2 | | | |
| 3 | | | |
| 4 | | | |
| 5 | | | |
| | | | |
| | | | |

## AS-BUILT PILE DATA

| Pile No. | Length in Place (ft) | PDA Nom. Axial Compressive Resistance (kips) | PDA End of Drive Blow Count (blows/in.) | Actual End of Drive Blow Count (blows/in.) | Remarks |
|---|---|---|---|---|---|
| INT. BENT NO. 2 | | | | | |
| 6 | | | | | |
| 7 | | | | | |
| 8 | | | | | |
| 9 | | | | | |
| 10 | | | | | |
| 11 | | | | | |
| 12 | | | | | |
| 13 | | | | | |
| | | | | | |
| | | | | | |

## AS-BUILT PILE DATA

| Pile No. | Length in Place (ft) | Computed Nominal Axial Compressive Resistance (kips) | Remarks | | |
|---|---|---|---|---|---|
| END BENT NO. 3 | | | | | |
| 14 | | | | | |
| 15 | | | | | |
| 16 | | | | | |
| 17 | | | | | |
| 18 | | | | | |
| | | | | | |
| | | | | | |

Note:
Indicate in remarks column:
A. Pile type and grade
B. Batter
C. Driven to practical refusal
D. PDA test pile
E. Minimum tip elevation controlled
(Use when actual blow count is less than PDA blow count due to minimum tip elevation requirement. A plus sign (+) shall be placed after the PDA nominal axial compressive resistance value indicating actual value is higher than PDA value.)

This sheet to be completed by MoDOT construction personnel.

Detailed Aug 2024
Checked Dec 2024

Note: This drawing is not to scale. Follow dimensions.

# AS-BUILT PILE DATA



STATE OF MISSOURI
OSMAN MOHAMMED
NUMBER PE-2021003145
PROFESSIONAL ENGINEER

02/20/2025 8:18:34 AM
Osman Mohammed
MO PE-2021003145

DATE PREPARED: 19-FEB-2025
ROUTE: 54WB
STATE: MO
DISTRICT: BR
SHEET NO.: 27
COUNTY: CALLAWAY
JOB NO.: JST0021
CONTRACT ID.:
PROJECT NO.:
BRIDGE NO.: A9556

| DATE | DESCRIPTION |
|---|---|
| 01/21/2025 | REV. A - FINAL REVIEW |
| 02/19/2025 | REV. 0 - RELEASED FOR CONSTRUCTION |

MISSOURI HIGHWAYS AND TRANSPORTATION COMMISSION
105 WEST CAPITOL
JEFFERSON CITY, MO 65102
1-888-ASK-MODOT (1-888-275-6636)

MoDOT IMPROVE I-70 DB PROJECT 1

MILLSTONE WEBER

MO STATE CERTIFICATE OF AUTHORITY #001444 ENGINEERING

## Missouri Department of Transportation
## Construction and Materials

**BORING NO. BR 36-1A**
Page 1 of 5

**Job No.:** 20241040.00 **County:** Callaway **Route:** I-70
**Design:** **Skew:** **Location:** Kingdom City, Missouri
**Bent:** **Logged By:** SO **Operator:** LRK
**Station:** **Northing:** 1675603.137 **Date of Work:** 05/21/24-05/22/24
**Offset:** **Easting:** 857708.988 **Depth to Water:** 48.5
**Elevation:** 830.8 **Requested Northing:** **Depth Hole Open:**
**Requested Station:** **Requested Easting:** **Time Change:**
**Requested Offset:** **Equipment:** CME 550X,Split-Spoon Sampler, Shelby Tube
**Requested Elevation:** **Location Note:** (38.9444108, -91.9414268)
**Drill No.:** **Hammer Efficiency:** 90% **Drilling Method:** HSA

| Depth (ft) | Graphic | Description | Elevation (ft) | Sample Type | REC % (RQD %) | Blow Counts ($N_{60}$) | Shear Data | Field Tests | Index Tests |
|---|---|---|---|---|---|---|---|---|---|
| 0 | | 0.0-21.8' (CH) Brown and gray, fat CLAY, trace sand and gravel | 830 | | | | | | |
| | | | | | 56 | 2-2-2 (6) | | PP = 1.75 tsf | MC = 26.4% |
| | | | | | 58 | | Qu Test Results UCS = 2.76 ksf MC = 22.8% | PP = 2.00 tsf | LL = 50 PL = 13 |
| 5 | | | 825 | | | | | | |
| | | | | | 72 | 3-5-5 (15) | | PP = 3.50 tsf | MC = 13.7% |
| 10 | | | | | 83 | | Qu Test Results MC = 19.3% $\gamma_{moist}$ = 135.1 pcf | PP = 3.75 tsf | LL = 70 PL = 16 |
| | | | 820 | | | | | | |
| 15 | | | | | 22 | 4-5-7 (18) | | PP = 2.25 tsf | LL = 52 PL = 13 MC = 20.4% |
| | | | 815 | | | | | | |
| 20 | | | | | 17 | 7-7-10 (26) | | | MC = 17.2% |
| | | 21.8-25.0' (CL) Brown and gray, lean CLAY, trace sand and gravel | 810 | | | | | | |
| 25 | | | | | 100 | 4-4-5 (14) | | PP = 3.00 tsf | LL = 47 PL = 15 MC = 20.3% |

$N_{60}$ = (Em/60)Nm $N_{60}$ - Corrected N value for standard 60% SPT efficiency; Em - Measured hammer efficiency in percent; Nm - Observed N-value
(1) = Assumed, (2) = Actual

**Coordinate System:** **Coordinate Zone:** **Coordinate Proj. Factor:**
**Coordinate Datum:** **Coordinate Units:** U.S. Survey Feet

* Persons using this information are cautioned that the materials shown are determined by the equipment noted and accuracy of the "log of materials" is limited thereby and by judgement of the operator. THIS INFORMATION IS FOR DESIGN PURPOSES ONLY.

LETTER BOREHOLE - MODOT 20150728.GDT - 8/15/24 11:52 - \\TSI\PROJECTS\STL\GEOTECH\2024 PROJECTS\20241040.00 I-70 THIRD LANE (KINGDOM CITY TO COLUMBIA)\WORKING FILES\MODOT I-70 3RD LANE 20241040 - PRELIMINARY.GPJ

## Missouri Department of Transportation
## Construction and Materials

**BORING NO. BR 36-1A**
Page 2 of 5

**Job No.:** 20241040.00 **County:** Callaway **Route:** I-70
**Design:** **Skew:** **Location:** Kingdom City, Missouri
**Bent:** **Logged By:** SO **Operator:** LRK
**Station:** **Northing:** 1675603.137 **Date of Work:** 05/21/24-05/22/24
**Offset:** **Easting:** 857708.988 **Depth to Water:** 48.5
**Elevation:** 830.8 **Requested Northing:** **Depth Hole Open:**
**Requested Station:** **Requested Easting:** **Time Change:**
**Requested Offset:** **Equipment:** CME 550X,Split-Spoon Sampler, Shelby Tube
**Requested Elevation:** **Location Note:** (38.9444108, -91.9414268)
**Drill No.:** **Hammer Efficiency:** 90% **Drilling Method:** HSA

| Depth (ft) | Graphic | Description | Elevation (ft) | Sample Type | REC % (RQD %) | Blow Counts ($N_{60}$) | Shear Data | Field Tests | Index Tests |
|---|---|---|---|---|---|---|---|---|---|
| 25 | | 25.0-26.8' (CL) Brown and gray, lean CLAY, trace sand and gravel | 805 | | | | | | |
| | | 26.8-50.0' (CH) Brown and gray, fat CLAY, trace sand and gravel | | | | | | | |
| 30 | | | | | 100 | 5-11-10 (32) | | PP = 3.00 tsf | MC = 15.0% |
| | | | 800 | | | | | | |
| 35 | | | | | 100 | 7-6-10 (24) | | PP >4.50 tsf | MC = 14.3% |
| | | | 795 | | | | | | |
| 40 | | 38.5' -auto hammer broke down at 38.5 ft. 38.5' -with silt lenses from 38.5 to 39.0 ft. | | | 83 | 9/0.5', 10/0' | | PP >4.50 tsf | MC = 13.9% |
| | | | 790 | | | | | | |
| 45 | | 43.5' -gravelly, with sand below 43.5 ft. | | | 100 | 6-11-14 (38) | | PP >4.50 tsf | MC = 15.4% |
| | | | 785 | | | | | | |
| 50 | | | | | 6 | 4-6-8 (21) | | | |

$N_{60}$ = (Em/60)Nm $N_{60}$ - Corrected N value for standard 60% SPT efficiency; Em - Measured hammer efficiency in percent; Nm - Observed N-value
(1) = Assumed, (2) = Actual

**Coordinate System:** **Coordinate Zone:** **Coordinate Proj. Factor:**
**Coordinate Datum:** **Coordinate Units:** U.S. Survey Feet

* Persons using this information are cautioned that the materials shown are determined by the equipment noted and accuracy of the "log of materials" is limited thereby and by judgement of the operator. THIS INFORMATION IS FOR DESIGN PURPOSES ONLY.

LETTER BOREHOLE - MODOT 20150728.GDT - 8/15/24 11:52 - \\TSI\PROJECTS\STL\GEOTECH\2024 PROJECTS\20241040.00 I-70 THIRD LANE (KINGDOM CITY TO COLUMBIA)\WORKING FILES\MODOT I-70 3RD LANE 20241040 - PRELIMINARY.GPJ

STATE OF MISSOURI
OSMAN MOHAMMED
NUMBER PE-2021003145
PROFESSIONAL ENGINEER
02/20/2025 8:18:34 AM
Osman Mohammed
MO PE-2021003145

| | |
|---|---|
| DATE PREPARED | 19-FEB-2025 |
| ROUTE | 54WB |
| STATE | MO |
| DISTRICT | BR |
| SHEET NO. | 28 |
| COUNTY | CALLAWAY |
| JOB NO. | JST0021 |
| CONTRACT ID. | |
| PROJECT NO. | |
| BRIDGE NO. | A9556 |

| DATE | DESCRIPTION |
|---|---|
| 01/21/2025 | REV. A - FINAL REVIEW |
| 02/19/2025 | REV. 0 - RELEASED FOR CONSTRUCTION |

MISSOURI HIGHWAYS AND TRANSPORTATION COMMISSION
105 WEST CAPITOL
JEFFERSON CITY, MO 65102
1-888-ASK-MODOT (1-888-275-6636)

MoDOT IMPROVE I-70 DB PROJECT 1

MILLSTONE WEBER

MO STATE CERTIFICATE OF AUTHORITY #001444 ENGINEERING

# BORING DATA

Note: For locations of borings, see Sheet No. 1.

Detailed Aug 2024
Checked Dec 2024

Note: This drawing is not to scale. Follow dimensions.

## Missouri Department of Transportation
## Construction and Materials

**BORING NO. BR 36-1A**
Page 3 of 5

**Job No.:** 20241040.00 **County:** Callaway **Route:** I-70
**Design:** **Skew:** **Location:** Kingdom City, Missouri
**Bent:** **Logged By:** SO **Operator:** LRK
**Station:** **Northing:** 1675603.137 **Date of Work:** 05/21/24-05/22/24
**Offset:** **Easting:** 857708.988 **Depth to Water:** 48.5
**Elevation:** 830.8 **Requested Northing:** **Depth Hole Open:**
**Requested Station:** **Requested Easting:** **Time Change:**
**Requested Offset:** **Equipment:** CME 550X,Split-Spoon Sampler, Shelby Tube
**Requested Elevation:** **Location Note:** (38.9444108, -91.9414268)
**Drill No.:** **Hammer Efficiency:** 90% **Drilling Method:** HSA

| Depth (ft) | Graphic | Description | Elevation (ft) | Sample Type | REC % (RQD %) | Blow Counts ($N_{60}$) | Shear Data | Field Tests | Index Tests |
|---|---|---|---|---|---|---|---|---|---|
| 50 | | 50.0-61.8' (CH) Brown and gray, fat CLAY, trace sand and gravel | 780 | | | | | | |
| 55 | | | | | 100 | 5-5-6 (17) | | PP = 2.75 tsf | MC = 19.5% |
| | | | 775 | | | | | | |
| 60 | | 58.5' -with sand and gravel below 58.5 ft. | | | 100 | 7-9-11 (30) | | PP >4.50 tsf | MC = 18.6% |
| | | | 770 | | | | | | |
| | | 61.8-66.8' (CL) Brown and gray, lean CLAY, trace sand and gravel | | | | | | | |
| 65 | | | | | 100 | 6-8-10 (27) | | PP >4.50 tsf | LL = 48 PL = 15 MC = 18.1% |
| | | | 765 | | | | | | |
| | | 66.8-75.0' (CH) Brown and gray, fat CLAY, trace sand and gravel | | | | | | | |
| 70 | | | | | 100 | 8-10-21 (47) | | PP >4.50 tsf | MC = 17.7% |
| | | | 760 | | | | | | |
| 75 | | | | | 100 | 7-9-12 (32) | | PP >4.50 tsf | MC = 16.8% |

$N_{60}$ = (Em/60)Nm $N_{60}$ - Corrected N value for standard 60% SPT efficiency; Em - Measured hammer efficiency in percent; Nm - Observed N-value
(1) = Assumed, (2) = Actual

**Coordinate System:** **Coordinate Zone:** **Coordinate Proj. Factor:**
**Coordinate Datum:** **Coordinate Units:** U.S. Survey Feet

* Persons using this information are cautioned that the materials shown are determined by the equipment noted and accuracy of the "log of materials" is limited thereby and by judgement of the operator. THIS INFORMATION IS FOR DESIGN PURPOSES ONLY.

LETTER BOREHOLE - MODOT 20150728.GDT - 8/15/24 11:52 - \\TSI\PROJECTS\STL\GEOTECH\2024 PROJECTS\20241040.00 I-70 THIRD LANE (KINGDOM CITY TO COLUMBIA)\WORKING FILES\MODOT I-70 3RD LANE 20241040 - PRELIMINARY.GPJ

## Missouri Department of Transportation
## Construction and Materials

**BORING NO. BR 36-1A**
Page 4 of 5

**Job No.:** 20241040.00 **County:** Callaway **Route:** I-70
**Design:** **Skew:** **Location:** Kingdom City, Missouri
**Bent:** **Logged By:** SO **Operator:** LRK
**Station:** **Northing:** 1675603.137 **Date of Work:** 05/21/24-05/22/24
**Offset:** **Easting:** 857708.988 **Depth to Water:** 48.5
**Elevation:** 830.8 **Requested Northing:** **Depth Hole Open:**
**Requested Station:** **Requested Easting:** **Time Change:**
**Requested Offset:** **Equipment:** CME 550X,Split-Spoon Sampler, Shelby Tube
**Requested Elevation:** **Location Note:** (38.9444108, -91.9414268)
**Drill No.:** **Hammer Efficiency:** 90% **Drilling Method:** HSA

| Depth (ft) | Graphic | Description | Elevation (ft) | Sample Type | REC % (RQD %) | Blow Counts ($N_{60}$) | Shear Data | Field Tests | Index Tests |
|---|---|---|---|---|---|---|---|---|---|
| 75 | | 75.0-97.0' (CH) Brown and gray, fat CLAY, with sand and gravel | 755 | | | | | | |
| 80 | | | | | 100 | 7-12-24 (54) | | PP = 3.75 tsf | MC = 16.4% |
| | | | 750 | | | | | | |
| 85 | | | | | 100 | 8-7-9 (24) | | PP = 4.50 tsf | MC = 18.5% |
| | | | 745 | | | | | | |
| 90 | | 88.5' -trace sand and gravel below 88.5 ft. | | | 100 | 5-6-7 (20) | | PP = 3.25 tsf | LL = 63 PL = 14 MC = 22.7% |
| | | | 740 | | | | | | |
| 95 | | | | | 100 | 10-13-19 (48) | | PP >4.50 tsf | MC = 16.3% |
| | | | 735 | | | | | | |
| | | 97.0-99.2' Gray, SHALE | | | | | | | |
| 100 | | 99.2-100.0' SHALE, gray, soft to very soft | | | 100 | 30-50/0.2' | | PP >4.50 tsf | MC = 9.4% |
| | | | | | 67 | | | | |

$N_{60}$ = (Em/60)Nm $N_{60}$ - Corrected N value for standard 60% SPT efficiency; Em - Measured hammer efficiency in percent; Nm - Observed N-value
(1) = Assumed, (2) = Actual

**Coordinate System:** **Coordinate Zone:** **Coordinate Proj. Factor:**
**Coordinate Datum:** **Coordinate Units:** U.S. Survey Feet

* Persons using this information are cautioned that the materials shown are determined by the equipment noted and accuracy of the "log of materials" is limited thereby and by judgement of the operator. THIS INFORMATION IS FOR DESIGN PURPOSES ONLY.

LETTER BOREHOLE - MODOT 20150728.GDT - 8/15/24 11:52 - \\TSI\PROJECTS\STL\GEOTECH\2024 PROJECTS\20241040.00 I-70 THIRD LANE (KINGDOM CITY TO COLUMBIA)\WORKING FILES\MODOT I-70 3RD LANE 20241040 - PRELIMINARY.GPJ

STATE OF MISSOURI
OSMAN MOHAMMED
NUMBER PE-2021003145
PROFESSIONAL ENGINEER
02/20/2025 8:18:35 AM
Osman Mohammed
MO PE-2021003145

| DATE PREPARED | |
|---|---|
| 19-FEB-2025 | |
| ROUTE 54WB | STATE MO |
| DISTRICT BR | SHEET NO. 29 |
| COUNTY CALLAWAY | |
| JOB NO. JST0021 | |
| CONTRACT ID. | |
| PROJECT NO. | |
| BRIDGE NO. A9556 | |

| DATE | DESCRIPTION |
|---|---|
| 01/21/2025 | REV. A - FINAL REVIEW |
| 02/19/2025 | REV. 0 - RELEASED FOR CONSTRUCTION |

MISSOURI HIGHWAYS AND TRANSPORTATION COMMISSION
105 WEST CAPITOL
JEFFERSON CITY, MO 65102
1-888-ASK-MODOT (1-888-275-6636)

MoDOT IMPROVE I-70 DB PROJECT 1

MILLSTONE WEBER

MO STATE CERTIFICATE OF AUTHORITY #001444 ENGINEERING

# BORING DATA

Note: For locations of borings, see Sheet No. 1.

Detailed Aug 2024
Checked Dec 2024

Note: This drawing is not to scale. Follow dimensions.

## Missouri Department of Transportation
## Construction and Materials

**BORING NO. BR 36-1A**
Page 5 of 5

| | | |
|---|---|---|
| **Job No.:** 20241040.00 | **County:** Callaway | **Route:** I-70 |
| **Design:** | **Skew:** | **Location:** Kingdom City, Missouri |
| **Bent:** | **Logged By:** SO | **Operator:** LRK |
| **Station:** | **Northing:** 1675603.137 | **Date of Work:** 05/21/24-05/22/24 |
| **Offset:** | **Easting:** 857708.988 | **Depth to Water:** 48.5 |
| **Elevation:** 830.8 | **Requested Northing:** | **Depth Hole Open:** |
| **Requested Station:** | **Requested Easting:** | **Time Change:** |
| **Requested Offset:** | **Equipment:** CME 550X,Split-Spoon Sampler, Shelby Tube | |
| **Requested Elevation:** | **Location Note:** (38.9444108, -91.9414268) | |
| **Drill No.:** | **Hammer Efficiency:** 90% | **Drilling Method:** HSA |

| Depth (ft) | Graphic | Description | Elevation (ft) | Sample Type | REC % (RQD %) | Blow Counts ($N_{60}$) | Shear Data | Field Tests | Index Tests |
|---|---|---|---|---|---|---|---|---|---|
| 100 | | 100.0-109.3' SHALE, gray, soft to very soft, highly weathered | 730 | | (0) | | | | |
| | | | | | 60 (37) | | Qu Test Results UCS = 3.96 ksf | | |
| 105 | | 105.0' -completely weathered below 105.0 ft. | 725 | | 33 (0) | | | | |
| 110 | | 109.3-115.0' LIMESTONE, moderately hard to hard, slightly to moderately weathered, aphanitic, thin to thick bedded, dense to pitted<br>109.3' -cherty from 109.3 to 110.0 ft. | 720 | | 100 (77) | | Qu Test Results UCS = 2320 ksf | | |
| 115 | | Refusal at 99.2 feet.<br>Bottom of borehole at 115.0 feet. | | | | | | | |

$N_{60}$ = (Em/60)Nm  $N_{60}$ - Corrected N value for standard 60% SPT efficiency; Em - Measured hammer efficiency in percent; Nm - Observed N-value
(1) = Assumed, (2) = Actual

**Coordinate System:** _____ **Coordinate Zone:** _____ **Coordinate Proj. Factor:** _____

**Coordinate Datum:** _____ **Coordinate Units:** U.S. Survey Feet

* Persons using this information are cautioned that the materials shown are determined by the equipment noted and accuracy of the "log of materials" is limited thereby and by judgement of the operator. THIS INFORMATION IS FOR DESIGN PURPOSES ONLY.

LETTER BOREHOLE - MODOT 20150728.GDT - 8/15/24 11:52 - \\TSI\PROJECTS\STL\GEOTECH\2024 PROJECTS\20241040.00 I-70 THIRD LANE (KINGDOM CITY TO COLUMBIA)\WORKING FILES\MODOT I-70 3RD LANE 20241040 - PRELIMINARY.GPJ

## Missouri Department of Transportation
## Construction and Materials

**BORING NO. BR 36-2**
Page 1 of 5

| | | |
|---|---|---|
| **Job No.:** 20241040.00 | **County:** Callaway | **Route:** I-70 |
| **Design:** | **Skew:** | **Location:** Kingdom City, Missouri |
| **Bent:** | **Logged By:** SO | **Operator:** LRK |
| **Station:** | **Northing:** 1675553.73 | **Date of Work:** 05/22/24-05/23/24 |
| **Offset:** | **Easting:** 857700.349 | **Depth to Water:** 8.0 |
| **Elevation:** 830.7 | **Requested Northing:** | **Depth Hole Open:** |
| **Requested Station:** | **Requested Easting:** | **Time Change:** |
| **Requested Offset:** | **Equipment:** CME 550X,Split-Spoon Sampler, Shelby Tube | |
| **Requested Elevation:** | **Location Note:** (38.9442819, -91.9414030) | |
| **Drill No.:** | **Hammer Efficiency:** 90% | **Drilling Method:** HSA |

| Depth (ft) | Graphic | Description | Elevation (ft) | Sample Type | REC % (RQD %) | Blow Counts ($N_{60}$) | Shear Data | Field Tests | Index Tests |
|---|---|---|---|---|---|---|---|---|---|
| 0 | | 0.0-7.7' (CH) Brown and gray, fat CLAY, with gravel and sand | 830 | | | | | | |
| | | | | | 44 | 2-4-4 (12) | | PP = 1.75 tsf | MC = 19.3% |
| | | 3.5' -sandy from 3.5 to 4.0 ft.<br>4.0' -trace sand and gravel from 4.0 to 5.0 ft. | | | 72 | 1-2-2 (6) | | PP = 1.00 tsf | MC = 20.5% |
| 5 | | 6.0' -with sand seams from 6.0 to 7.5 ft. | 825 | | 83 | 5-8-14 (33) | | PP >4.50 tsf | MC = 15.4% |
| | | 7.7-12.0' (CL-ML) Brown and gray, SILTY CLAY, with gravel and sand | | | 100 | | Qu Test Results UCS = 4.51 ksf MC = 19.3% $\gamma_{moist}$ = 127.3 pcf | PP = 3.25 tsf | LL = 23 PL = 17 |
| 10 | | 12.0-25.0' (CH) Brown and gray, fat CLAY, with gravel and sand | 820 | | | | | | |
| | | 13.5' -trace sand and gravel from 13.5 to 15.0 ft. | | | 67 | 5-9-11 (30) | | PP >4.50 tsf | MC = 17.1% |
| 15 | | | 815 | | | | | | |
| | | 18.5' -gray from 18.5 to 20.0 ft. | | | 72 | 8-10-11 (32) | | PP = 2.50 tsf | MC = 18.9% |
| 20 | | | 810 | | | | | | |
| | | 23.5' -with sand seams from 23.5 to 25.0 ft. | | | 100 | 13-9-7 (24) | | PP = 3.00 tsf | MC = 20.7% |
| 25 | | | | | | | | | |

$N_{60}$ = (Em/60)Nm  $N_{60}$ - Corrected N value for standard 60% SPT efficiency; Em - Measured hammer efficiency in percent; Nm - Observed N-value
(1) = Assumed, (2) = Actual

**Coordinate System:** _____ **Coordinate Zone:** _____ **Coordinate Proj. Factor:** _____

**Coordinate Datum:** _____ **Coordinate Units:** U.S. Survey Feet

* Persons using this information are cautioned that the materials shown are determined by the equipment noted and accuracy of the "log of materials" is limited thereby and by judgement of the operator. THIS INFORMATION IS FOR DESIGN PURPOSES ONLY.

LETTER BOREHOLE - MODOT 20150728.GDT - 8/15/24 11:52 - \\TSI\PROJECTS\STL\GEOTECH\2024 PROJECTS\20241040.00 I-70 THIRD LANE (KINGDOM CITY TO COLUMBIA)\WORKING FILES\MODOT I-70 3RD LANE 20241040 - PRELIMINARY.GPJ

STATE OF MISSOURI
OSMAN MOHAMMED
NUMBER PE-2021003145
PROFESSIONAL ENGINEER

02/20/2025 8:18:35 AM
Osman Mohammed
MO PE-2021003145

DATE PREPARED: 19-FEB-2025
ROUTE: 54WB | STATE: MO
DISTRICT: BR | SHEET NO.: 30
COUNTY: CALLAWAY
JOB NO.: JST0021
CONTRACT ID.
PROJECT NO.
BRIDGE NO.: A9556

| DATE | DESCRIPTION |
|---|---|
| 01/21/2025 | REV. A - FINAL REVIEW |
| 02/19/2025 | REV. 0 - RELEASED FOR CONSTRUCTION |

MISSOURI HIGHWAYS AND TRANSPORTATION COMMISSION
105 WEST CAPITOL
JEFFERSON CITY, MO 65102
1-888-ASK-MODOT (1-888-275-6636)

MoDOT IMPROVE I-70 DB PROJECT 1

MILLSTONE WEBER

MO STATE CERTIFICATE OF AUTHORITY #001444 ENGINEERING

# BORING DATA

Note: For locations of borings, see Sheet No. 1.

Detailed Aug 2024
Checked Dec 2024

Note: This drawing is not to scale. Follow dimensions.

## Missouri Department of Transportation
## Construction and Materials

**BORING NO. BR 36-2**
Page 2 of 5

**Job No.:** 20241040.00 **County:** Callaway **Route:** I-70
**Design:** **Skew:** **Location:** Kingdom City, Missouri
**Bent:** **Logged By:** SO **Operator:** LRK
**Station:** **Northing:** 1675553.73 **Date of Work:** 05/22/24-05/23/24
**Offset:** **Easting:** 857700.349 **Depth to Water:** 8.0
**Elevation:** 830.7 **Requested Northing:** **Depth Hole Open:**
**Requested Station:** **Requested Easting:** **Time Change:**
**Requested Offset:** **Equipment:** CME 550X,Split-Spoon Sampler, Shelby Tube
**Requested Elevation:** **Location Note:** (38.9442819, -91.9414030)
**Drill No.:** **Hammer Efficiency:** 90% **Drilling Method:** HSA

| Depth (ft) | Graphic | Description | Elevation (ft) | Sample Type | REC % (RQD %) | Blow Counts ($N_{60}$) | Shear Data | Field Tests | Index Tests |
|---|---|---|---|---|---|---|---|---|---|
| 25 | | 25.0-50.0' (CH) Gray, fat CLAY, with gravel and sand | 805 | | | | | | |
| 30 | | | | X | 100 | 5-10-11 (32) | | PP = 3.50 tsf | MC = 18.1% |
| | | | 800 | | | | | | |
| 35 | | 33.5' -trace sand and gravel from 33.5 to 35.0 ft. | | X | 100 | 5-7-11 (27) | | PP >4.50 tsf | MC = 16.1% |
| | | | 795 | | | | | | |
| 40 | | | | X | 100 | 6-9-11 (30) | | PP >4.50 tsf | MC = 17.8% |
| | | | 790 | | | | | | |
| 45 | | 43.5' -with sand lenses from 43.5 to 45.0 ft. | | X | 100 | 11-27-25 (78) | | PP = 3.00 tsf | MC = 17.1% |
| | | | 785 | | | | | | |
| 50 | | | | X | 100 | 4-7-8 (23) | | PP = 3.00 tsf | MC = 17.8% |

$N_{60}$ = (Em/60)Nm $N_{60}$ - Corrected N value for standard 60% SPT efficiency; Em - Measured hammer efficiency in percent; Nm - Observed N-value
(1) = Assumed, (2) = Actual

**Coordinate System:** **Coordinate Zone:** **Coordinate Proj. Factor:**
**Coordinate Datum:** **Coordinate Units:** U.S. Survey Feet

* Persons using this information are cautioned that the materials shown are determined by the equipment noted and accuracy of the "log of materials" is limited thereby and by judgement of the operator. THIS INFORMATION IS FOR DESIGN PURPOSES ONLY.


## Missouri Department of Transportation
## Construction and Materials


**BORING NO. BR 36-2**
Page 3 of 5


**Job No.:** 20241040.00 **County:** Callaway **Route:** I-70
**Design:** **Skew:** **Location:** Kingdom City, Missouri
**Bent:** **Logged By:** SO **Operator:** LRK
**Station:** **Northing:** 1675553.73 **Date of Work:** 05/22/24-05/23/24
**Offset:** **Easting:** 857700.349 **Depth to Water:** 8.0
**Elevation:** 830.7 **Requested Northing:** **Depth Hole Open:**
**Requested Station:** **Requested Easting:** **Time Change:**
**Requested Offset:** **Equipment:** CME 550X,Split-Spoon Sampler, Shelby Tube
**Requested Elevation:** **Location Note:** (38.9442819, -91.9414030)
**Drill No.:** **Hammer Efficiency:** 90% **Drilling Method:** HSA


| Depth (ft) | Graphic | Description | Elevation (ft) | Sample Type | REC % (RQD %) | Blow Counts ($N_{60}$) | Shear Data | Field Tests | Index Tests |
|---|---|---|---|---|---|---|---|---|---|
| 50 | | 50.0-67.0' (CH) Brown and gray, fat CLAY, with gravel and sand | 780 | | | | | | |
| 55 | | 53.5' -trace sand and gravel from 53.5 to 55.0 ft. | | X | 100 | 6-8-8 (24) | | PP = 3.00 tsf | MC = 16.8% |
| | | | 775 | | | | | | |
| 60 | | | | X | 100 | 5-12-13 (38) | | PP = 4.00 tsf | MC = 22.0% |
| | | | 770 | | | | | | |
| 65 | | 63.5' -with sand seams below 63.5 ft. | | X | 100 | 5-6-7 (20) | | PP >4.50 tsf | MC = 18.0% |
| | | | 765 | | | | | | |
| | | 67.0-69.3' (CL) Gray, lean CLAY, silty | | | | | | | |
| 70 | | 69.3-93.5' (CH) Brown and gray, fat CLAY, with gravel and sand | | X | 100 | 5-6-7 (20) | | PP = 4.50 tsf | LL = 31 PL = 14 MC = 20.1% |
| | | | 760 | | | | | | |
| 75 | | | | X | 100 | 6-7-10 (26) | | PP = 4.25 tsf | MC = 18.3% |


$N_{60}$ = (Em/60)Nm $N_{60}$ - Corrected N value for standard 60% SPT efficiency; Em - Measured hammer efficiency in percent; Nm - Observed N-value
(1) = Assumed, (2) = Actual

**Coordinate System:** **Coordinate Zone:** **Coordinate Proj. Factor:**
**Coordinate Datum:** **Coordinate Units:** U.S. Survey Feet

* Persons using this information are cautioned that the materials shown are determined by the equipment noted and accuracy of the "log of materials" is limited thereby and by judgement of the operator. THIS INFORMATION IS FOR DESIGN PURPOSES ONLY.


LETTER BOREHOLE - MODOT 20150728.GDT - 8/15/24 11:52 - \\TSI\PROJECTS\STL\GEOTECH\2024 PROJECTS\20241040.00 I-70 THIRD LANE (KINGDOM CITY TO COLUMBIA)\WORKING FILES\MODOT I-70 3RD LANE 20241040 - PRELIMINARY.GPJ

STATE OF MISSOURI
OSMAN MOHAMMED
NUMBER PE-2021003145
PROFESSIONAL ENGINEER
02/20/2025 8:18:35 AM
Osman Mohammed
MO PE-2021003145

| | |
|---|---|
| DATE PREPARED | 19-FEB-2025 |
| ROUTE | 54WB |
| STATE | MO |
| DISTRICT | BR |
| SHEET NO. | 31 |
| COUNTY | CALLAWAY |
| JOB NO. | JST0021 |
| CONTRACT ID. | |
| PROJECT NO. | |
| BRIDGE NO. | A9556 |

| DATE | DESCRIPTION |
|---|---|
| 01/21/2025 | REV. A - FINAL REVIEW |
| 02/19/2025 | REV. 0 - RELEASED FOR CONSTRUCTION |

MISSOURI HIGHWAYS AND TRANSPORTATION COMMISSION
105 WEST CAPITOL
JEFFERSON CITY, MO 65102
1-888-ASK-MODOT (1-888-275-6636)

MoDOT IMPROVE I-70 DB PROJECT 1

MILLSTONE WEBER

MO STATE CERTIFICATE OF AUTHORITY #001444 ENGINEERING

# BORING DATA

Note: For locations of borings, see Sheet No. 1.

Detailed Aug 2024
Checked Dec 2024

Note: This drawing is not to scale. Follow dimensions.

## Missouri Department of Transportation
## Construction and Materials

**BORING NO. BR 36-2**
Page 4 of 5

| | | |
|---|---|---|
| **Job No.:** 20241040.00 | **County:** Callaway | **Route:** I-70 |
| **Design:** | **Skew:** | **Location:** Kingdom City, Missouri |
| **Bent:** | **Logged By:** SO | **Operator:** LRK |
| **Station:** | **Northing:** 1675553.73 | **Date of Work:** 05/22/24-05/23/24 |
| **Offset:** | **Easting:** 857700.349 | **Depth to Water:** 8.0 |
| **Elevation:** 830.7 | **Requested Northing:** | **Depth Hole Open:** |
| **Requested Station:** | **Requested Easting:** | **Time Change:** |
| **Requested Offset:** | **Equipment:** CME 550X,Split-Spoon Sampler, Shelby Tube | |
| **Requested Elevation:** | **Location Note:** (38.9442819, -91.9414030) | |
| **Drill No.:** | **Hammer Efficiency:** 90% | **Drilling Method:** HSA |

| Depth (ft) | Graphic | Description | Elevation (ft) | Sample Type | REC % (RQD %) | Blow Counts ($N_{60}$) | Shear Data | Field Tests | Index Tests |
|---|---|---|---|---|---|---|---|---|---|
| 75 | | 69.3-93.5' (CH) Brown and gray, fat CLAY, with gravel and sand *(continued)* | 755 | | | | | | |
| | | | | | 56 | 11-36-22 (87) | | PP = 3.75 tsf | MC = 17.7% |
| 80 | | | 750 | | | | | | |
| | | | | | 100 | 5-5-11 (24) | | PP = 2.00 tsf | MC = 19.7% |
| 85 | | | 745 | | | | | | |
| | | | | | 100 | 8-13-13 (39) | | PP = 4.00 tsf | MC = 20.5% |
| 90 | | | 740 | | | | | | |
| | | 93.5-100.0' No recovery<br>93.5' (Run 1 = 5.3 min/ft) | | | 0<br>0<br>(0) | 50/0.1' | | | |
| 95 | | | 735 | | | | | | |
| | | 97.0' (Run 2 = 5, 4, 3, 4, 8 min/ft) | | | 0<br>(0) | | | | |
| 100 | | | | | | | | | |

$N_{60}$ = (Em/60)Nm  $N_{60}$ - Corrected N value for standard 60% SPT efficiency; Em - Measured hammer efficiency in percent; Nm - Observed N-value
(1) = Assumed, (2) = Actual

**Coordinate System:** _____ **Coordinate Zone:** _____ **Coordinate Proj. Factor:** _____

**Coordinate Datum:** _____ **Coordinate Units:** U.S. Survey Feet

* Persons using this information are cautioned that the materials shown are determined by the equipment noted and accuracy of the "log of materials" is limited thereby and by judgement of the operator. THIS INFORMATION IS FOR DESIGN PURPOSES ONLY.

LETTER BOREHOLE - MODOT 20150728.GDT - 8/15/24 11:52 - \\TSIPROJECTS\STL\GEOTECH\2024 PROJECTS\20241040.00 I-70 THIRD LANE (KINGDOM CITY TO COLUMBIA)\WORKING FILES\MODOT I-70 3RD LANE 20241040 - PRELIMINARY.GPJ

## Missouri Department of Transportation
## Construction and Materials

**BORING NO. BR 36-2**
Page 5 of 5

| | | |
|---|---|---|
| **Job No.:** 20241040.00 | **County:** Callaway | **Route:** I-70 |
| **Design:** | **Skew:** | **Location:** Kingdom City, Missouri |
| **Bent:** | **Logged By:** SO | **Operator:** LRK |
| **Station:** | **Northing:** 1675553.73 | **Date of Work:** 05/22/24-05/23/24 |
| **Offset:** | **Easting:** 857700.349 | **Depth to Water:** 8.0 |
| **Elevation:** 830.7 | **Requested Northing:** | **Depth Hole Open:** |
| **Requested Station:** | **Requested Easting:** | **Time Change:** |
| **Requested Offset:** | **Equipment:** CME 550X,Split-Spoon Sampler, Shelby Tube | |
| **Requested Elevation:** | **Location Note:** (38.9442819, -91.9414030) | |
| **Drill No.:** | **Hammer Efficiency:** 90% | **Drilling Method:** HSA |

| Depth (ft) | Graphic | Description | Elevation (ft) | Sample Type | REC % (RQD %) | Blow Counts ($N_{60}$) | Shear Data | Field Tests | Index Tests |
|---|---|---|---|---|---|---|---|---|---|
| 100 | | 100.0-120.0' SHALE, gray, soft to very soft<br>100.0' -with limestone fragments from 100.0 to 105.0 ft. | 730 | | | | | | |
| | | 102.0' (Run 3 = 7, 5, 8, 6, 6 min/ft) | | | 17<br>(10) | | | | |
| 105 | | 105.0' -rotary wash from 105.0 to 106.0 ft. | 725 | | 100 | 50/0.3' | | PP >4.50 tsf | |
| | | 108.0' (Run 4 = 3, 3, 3, 9 min/ft) | | | 92<br>(54) | | Qu Test Results<br>UCS = 7.98 ksf<br>MC = 11.6% | | |
| 110 | | | 720 | | | | | | |
| | | 112.0' (Run 5 = 4, 4, 4, 7, 10 min/ft) | | | 68<br>(45) | | Qu Test Results<br>UCS = 2.08 ksf<br>MC = 12.6% | | |
| 115 | | | 715 | | | | | | |
| | | 117.0' (Run 6 = 6, 5, 5, 7, 7 min/ft) | | | 47<br>(23) | | | | |
| 120 | | Refusal at 93.5 feet.<br>Bottom of borehole at 120.0 feet. | | | | | | | |

$N_{60}$ = (Em/60)Nm  $N_{60}$ - Corrected N value for standard 60% SPT efficiency; Em - Measured hammer efficiency in percent; Nm - Observed N-value
(1) = Assumed, (2) = Actual

**Coordinate System:** _____ **Coordinate Zone:** _____ **Coordinate Proj. Factor:** _____

**Coordinate Datum:** _____ **Coordinate Units:** U.S. Survey Feet

* Persons using this information are cautioned that the materials shown are determined by the equipment noted and accuracy of the "log of materials" is limited thereby and by judgement of the operator. THIS INFORMATION IS FOR DESIGN PURPOSES ONLY.

LETTER BOREHOLE - MODOT 20150728.GDT - 8/15/24 11:52 - \\TSIPROJECTS\STL\GEOTECH\2024 PROJECTS\20241040.00 I-70 THIRD LANE (KINGDOM CITY TO COLUMBIA)\WORKING FILES\MODOT I-70 3RD LANE 20241040 - PRELIMINARY.GPJ

STATE OF MISSOURI
OSMAN MOHAMMED
NUMBER PE-2021003145
PROFESSIONAL ENGINEER

02/20/2025 8:18:35 AM
Osman Mohammed
MO PE-2021003145

| DATE PREPARED | |
|---|---|
| 19-FEB-2025 | |
| ROUTE: 54WB | STATE: MO |
| DISTRICT: BR | SHEET NO.: 32 |
| COUNTY: CALLAWAY | |
| JOB NO.: JST0021 | |
| CONTRACT ID. | |
| PROJECT NO. | |
| BRIDGE NO.: A9556 | |

| DATE | DESCRIPTION |
|---|---|
| 01/21/2025 | REV. A - FINAL REVIEW |
| 02/19/2025 | REV. 0 - RELEASED FOR CONSTRUCTION |

MISSOURI HIGHWAYS AND TRANSPORTATION COMMISSION
105 WEST CAPITOL
JEFFERSON CITY, MO 65102
1-888-ASK-MODOT (1-888-275-6636)

MoDOT IMPROVE I-70 DB PROJECT 1

MILLSTONE WEBER

MO STATE CERTIFICATE OF AUTHORITY #001444 ENGINEERING

# BORING DATA

Note: For locations of borings, see Sheet No. 1.

Detailed Aug 2024
Checked Dec 2024

Note: This drawing is not to scale. Follow dimensions.

## Missouri Department of Transportation
## Construction and Materials

**BORING NO. BR 36-3A**
Page 1 of 5

**Job No.:** 20241040.00 **County:** Callaway **Route:** I-70
**Design:** **Skew:** **Location:** Kingdom City, Missouri
**Bent:** **Logged By:** SO **Operator:** LRK
**Station:** **Northing:** 1675503.187 **Date of Work:** 05/14/24-05/15/24
**Offset:** **Easting:** 857701.073 **Depth to Water:** 13.5
**Elevation:** 831.3 **Requested Northing:** **Depth Hole Open:**
**Requested Station:** **Requested Easting:** **Time Change:**
**Requested Offset:** **Equipment:** CME 550X,Split-Spoon Sampler, Shelby Tube
**Requested Elevation:** **Location Note:** (38.9441375, -91.9414315)
**Drill No.:** **Hammer Efficiency:** 90% **Drilling Method:** HSA

| Depth (ft) | Graphic | Description | Elevation (ft) | Sample Type | REC % (RQD %) | Blow Counts ($N_{60}$) | Shear Data | Field Tests | Index Tests |
|---|---|---|---|---|---|---|---|---|---|
| 0 | | 0.0-0.6' Asphaltic concrete (7.0") | | | | | | | |
| | | 0.6-1.2' Aggregate base (7.0") | | | | | | | |
| | | 1.2-7.7' (CH) Brown and gray, fat CLAY | 830 | | 44 | 8-3-3 (9) | | PP = 1.75 tsf | MC = 15.7% |
| 5 | | | | | 92 | | Qu Test Results UCS = 2.82 ksf MC = 23.3% $\gamma_{moist}$ = 129.4 pcf | PP = 4.25 tsf | LL = 64 PL = 17 |
| | | 6.0' -trace sand and gravel below 6.0 ft. | 825 | | 100 | 6-5-6 (17) | | PP = 2.75 tsf | MC = 14.9% |
| | | 7.7-25.0' (CL) Brown and gray, lean CLAY 8.0' -sandy from 8.0 to 15.0 ft. | | | 92 | | Qu Test Results UCS = 4.46 ksf MC = 11.2% $\gamma_{moist}$ = 136.4 pcf | PP = 4.00 tsf | LL = 44 PL = 14 |
| 10 | | | 820 | | | | | | |
| | | 13.5' -trace gravel from 13.5 to 15.0 ft. | | | 67 | 4-5-16 (32) | | PP = 2.00 tsf | MC = 11.8% |
| 15 | | | 815 | | | | | | |
| | | 18.5' -with sand and gravel below 18.5 ft. | | | 44 | 7-8-7 (23) | | PP = 2.50 tsf | MC = 12.1% |
| 20 | | | 810 | | | | | | |
| 25 | | | | | 17 | 11-9-11 (30) | | | MC = 16.9% |

$N_{60}$ = (Em/60)Nm $N_{60}$ - Corrected N value for standard 60% SPT efficiency; Em - Measured hammer efficiency in percent; Nm - Observed N-value
(1) = Assumed, (2) = Actual

**Coordinate System:** **Coordinate Zone:** **Coordinate Proj. Factor:**
**Coordinate Datum:** **Coordinate Units:** U.S. Survey Feet

* Persons using this information are cautioned that the materials shown are determined by the equipment noted and accuracy of the "log of materials" is limited thereby and by judgement of the operator. THIS INFORMATION IS FOR DESIGN PURPOSES ONLY.

LETTER BOREHOLE - MODOT 20150728.GDT - 8/15/24 11:52 - \\TSI\PROJECTS\STL\GEOTECH\2024 PROJECTS\20241040.00 I-70 THIRD LANE (KINGDOM CITY TO COLUMBIA)\WORKING FILES\MODOT I-70 3RD LANE 20241040 - PRELIMINARY.GPJ

## Missouri Department of Transportation
## Construction and Materials

**BORING NO. BR 36-3A**
Page 2 of 5

**Job No.:** 20241040.00 **County:** Callaway **Route:** I-70
**Design:** **Skew:** **Location:** Kingdom City, Missouri
**Bent:** **Logged By:** SO **Operator:** LRK
**Station:** **Northing:** 1675503.187 **Date of Work:** 05/14/24-05/15/24
**Offset:** **Easting:** 857701.073 **Depth to Water:** 13.5
**Elevation:** 831.3 **Requested Northing:** **Depth Hole Open:**
**Requested Station:** **Requested Easting:** **Time Change:**
**Requested Offset:** **Equipment:** CME 550X,Split-Spoon Sampler, Shelby Tube
**Requested Elevation:** **Location Note:** (38.9441375, -91.9414315)
**Drill No.:** **Hammer Efficiency:** 90% **Drilling Method:** HSA

| Depth (ft) | Graphic | Description | Elevation (ft) | Sample Type | REC % (RQD %) | Blow Counts ($N_{60}$) | Shear Data | Field Tests | Index Tests |
|---|---|---|---|---|---|---|---|---|---|
| 25 | | 25.0-27.0' (CL) Brown and gray, lean CLAY, with sand and gravel | 805 | | | | | | |
| | | 27.0-42.0' (CH) Gray, fat CLAY, trace sand and gravel | | | 100 | 3-4-6 (15) | | PP = 3.00 tsf | LL = 57 PL = 17 MC = 17.0% |
| 30 | | | 800 | | | | | | |
| | | | | | 100 | 4-14-21 (53) | | PP >4.50 tsf | MC = 11.1% |
| 35 | | | 795 | | | | | | |
| | | | | | 100 | 13-32-19 (77) | | PP = 4.50 tsf | MC = 13.4% |
| 40 | | | 790 | | | | | | |
| | | 42.0-50.0' (CL) Gray, lean CLAY, trace sand and gravel | | | 100 | 6-10-14 (36) | | PP = 4.00 tsf | LL = 45 PL = 14 MC = 13.0% |
| 45 | | | 785 | | | | | | |
| 50 | | | | | 100 | 6-8-14 (33) | | PP = 3.50 tsf | MC = 14.1% |

$N_{60}$ = (Em/60)Nm $N_{60}$ - Corrected N value for standard 60% SPT efficiency; Em - Measured hammer efficiency in percent; Nm - Observed N-value
(1) = Assumed, (2) = Actual

**Coordinate System:** **Coordinate Zone:** **Coordinate Proj. Factor:**
**Coordinate Datum:** **Coordinate Units:** U.S. Survey Feet

* Persons using this information are cautioned that the materials shown are determined by the equipment noted and accuracy of the "log of materials" is limited thereby and by judgement of the operator. THIS INFORMATION IS FOR DESIGN PURPOSES ONLY.

LETTER BOREHOLE - MODOT 20150728.GDT - 8/15/24 11:52 - \\TSI\PROJECTS\STL\GEOTECH\2024 PROJECTS\20241040.00 I-70 THIRD LANE (KINGDOM CITY TO COLUMBIA)\WORKING FILES\MODOT I-70 3RD LANE 20241040 - PRELIMINARY.GPJ

STATE OF MISSOURI
OSMAN MOHAMMED
NUMBER PE-2021003145
PROFESSIONAL ENGINEER
02/20/2025 8:18:35 AM
Osman Mohammed
MO PE-2021003145

DATE PREPARED: 19-FEB-2025
ROUTE: 54WB STATE: MO
DISTRICT: BR SHEET NO.: 33
COUNTY: CALLAWAY
JOB NO.: JST0021
CONTRACT ID.
PROJECT NO.
BRIDGE NO.: A9556

| DATE | DESCRIPTION |
|---|---|
| 01/21/2025 | REV. A - FINAL REVIEW |
| 02/19/2025 | REV. 0 - RELEASED FOR CONSTRUCTION |

MISSOURI HIGHWAYS AND TRANSPORTATION COMMISSION
105 WEST CAPITOL
JEFFERSON CITY, MO 65102
1-888-ASK-MODOT (1-888-275-6636)

MoDOT IMPROVE I-70 DB PROJECT 1

MILLSTONE WEBER

MO STATE CERTIFICATE OF AUTHORITY #001444 ENGINEERING

# BORING DATA

Note: For locations of borings, see Sheet No. 1.

Detailed Aug 2024
Checked Dec 2024

Note: This drawing is not to scale. Follow dimensions.

## Missouri Department of Transportation
## Construction and Materials

**BORING NO. BR 36-3A**
Page 3 of 5

**Job No.:** 20241040.00 **County:** Callaway **Route:** I-70
**Design:** **Skew:** **Location:** Kingdom City, Missouri
**Bent:** **Logged By:** SO **Operator:** LRK
**Station:** **Northing:** 1675503.187 **Date of Work:** 05/14/24-05/15/24
**Offset:** **Easting:** 857701.073 **Depth to Water:** 13.5
**Elevation:** 831.3 **Requested Northing:** **Depth Hole Open:**
**Requested Station:** **Requested Easting:** **Time Change:**
**Requested Offset:** **Equipment:** CME 550X,Split-Spoon Sampler, Shelby Tube
**Requested Elevation:** **Location Note:** (38.9441375, -91.9414315)
**Drill No.:** **Hammer Efficiency:** 90% **Drilling Method:** HSA

| Depth (ft) | Graphic | Description | Elevation (ft) | Sample Type | REC % (RQD %) | Blow Counts ($N_{60}$) | Shear Data | Field Tests | Index Tests |
|---|---|---|---|---|---|---|---|---|---|
| 50 | | 50.0-75.0' (CH) Gray, fat CLAY | 780 | | | | | | |
| | | | | X | 100 | 12-6-5 (17) | | PP = 2.50 tsf | MC = 18.5% |
| 55 | | | 775 | | | | | | |
| | | 58.5' -gray and brown, with gravel below 58.5 ft. | | X | 100 | 8-8-10 (27) | | PP = 4.25 tsf | LL = 56 PL = 17 MC = 14.6% |
| 60 | | | 770 | | | | | | |
| | | | | X | 100 | 10-14-13 (41) | | PP >4.50 tsf | MC = 14.7% |
| 65 | | | 765 | | | | | | |
| | | | | X | 39 | 9-12-16 (42) | | PP = 4.50 tsf | MC = 20.3% |
| 70 | | | 760 | | | | | | |
| | | 73.5' -trace sand below 73.5 ft. | | X | 100 | 12-9-10 (29) | | PP >4.50 tsf | LL = 53 PL = 15 MC = 14.1% |
| 75 | | | | | | | | | |

$N_{60}$ = (Em/60)Nm $N_{60}$ - Corrected N value for standard 60% SPT efficiency; Em - Measured hammer efficiency in percent; Nm - Observed N-value
(1) = Assumed, (2) = Actual

**Coordinate System:** **Coordinate Zone:** **Coordinate Proj. Factor:**
**Coordinate Datum:** **Coordinate Units:** U.S. Survey Feet

* Persons using this information are cautioned that the materials shown are determined by the equipment noted and accuracy of the "log of materials" is limited thereby and by judgement of the operator. THIS INFORMATION IS FOR DESIGN PURPOSES ONLY.

LETTER BOREHOLE - MODOT 20150728.GDT - 8/15/24 11:52 - \\TSI\PROJECTS\STL\GEOTECH\2024 PROJECTS\20241040.00 I-70 THIRD LANE (KINGDOM CITY TO COLUMBIA)\WORKING FILES\MODOT I-70 3RD LANE 20241040 - PRELIMINARY.GPJ

## Missouri Department of Transportation
## Construction and Materials

**BORING NO. BR 36-3A**
Page 4 of 5

**Job No.:** 20241040.00 **County:** Callaway **Route:** I-70
**Design:** **Skew:** **Location:** Kingdom City, Missouri
**Bent:** **Logged By:** SO **Operator:** LRK
**Station:** **Northing:** 1675503.187 **Date of Work:** 05/14/24-05/15/24
**Offset:** **Easting:** 857701.073 **Depth to Water:** 13.5
**Elevation:** 831.3 **Requested Northing:** **Depth Hole Open:**
**Requested Station:** **Requested Easting:** **Time Change:**
**Requested Offset:** **Equipment:** CME 550X,Split-Spoon Sampler, Shelby Tube
**Requested Elevation:** **Location Note:** (38.9441375, -91.9414315)
**Drill No.:** **Hammer Efficiency:** 90% **Drilling Method:** HSA

| Depth (ft) | Graphic | Description | Elevation (ft) | Sample Type | REC % (RQD %) | Blow Counts ($N_{60}$) | Shear Data | Field Tests | Index Tests |
|---|---|---|---|---|---|---|---|---|---|
| 75 | | 75.0-99.2' (CH) Gray and brown, fat CLAY, with gravel<br>75.0' -trace sand from 75.0 to 85.0 ft. | 755 | | | | | | |
| | | | | X | 17 | 25-16-17 (50) | | PP = 2.50 tsf | MC = 15.3% |
| 80 | | | 750 | | | | | | |
| | | 83.5' -trace gravel from 83.5 to 90.0 ft. | | X | 100 | 5-5-8 (20) | | PP = 3.00 tsf | MC = 18.5% |
| 85 | | | 745 | | | | | | |
| | | | | X | 100 | 6-7-10 (26) | | PP = 3.50 tsf | LL = 66 PL = 15 MC = 17.8% |
| 90 | | | 740 | | | | | | |
| | | 93.5' -gravelly below 93.5 ft. | | X | 100 | 20-18-17 (53) | | PP >4.50 tsf | MC = 11.9% |
| 95 | | | 735 | | | | | | |
| | | | | X | 100 | 15-50/0.5' | | PP = 4.50 tsf | |
| 100 | | 99.2-100.0' Gray, SHALE, soft | | | | | | | |

$N_{60}$ = (Em/60)Nm $N_{60}$ - Corrected N value for standard 60% SPT efficiency; Em - Measured hammer efficiency in percent; Nm - Observed N-value
(1) = Assumed, (2) = Actual

**Coordinate System:** **Coordinate Zone:** **Coordinate Proj. Factor:**
**Coordinate Datum:** **Coordinate Units:** U.S. Survey Feet

* Persons using this information are cautioned that the materials shown are determined by the equipment noted and accuracy of the "log of materials" is limited thereby and by judgement of the operator. THIS INFORMATION IS FOR DESIGN PURPOSES ONLY.

LETTER BOREHOLE - MODOT 20150728.GDT - 8/15/24 11:52 - \\TSI\PROJECTS\STL\GEOTECH\2024 PROJECTS\20241040.00 I-70 THIRD LANE (KINGDOM CITY TO COLUMBIA)\WORKING FILES\MODOT I-70 3RD LANE 20241040 - PRELIMINARY.GPJ

STATE OF MISSOURI
OSMAN MOHAMMED
NUMBER PE-2021003145
PROFESSIONAL ENGINEER
02/20/2025 8:18:35 AM
Osman Mohammed
MO PE-2021003145

| DATE PREPARED | |
|---|---|
| 19-FEB-2025 | |
| ROUTE 54WB | STATE MO |
| DISTRICT BR | SHEET NO. 34 |
| COUNTY CALLAWAY | |
| JOB NO. JST0021 | |
| CONTRACT ID. | |
| PROJECT NO. | |
| BRIDGE NO. A9556 | |

| DATE | DESCRIPTION |
|---|---|
| 01/21/2025 | REV. A - FINAL REVIEW |
| 02/19/2025 | REV. 0 - RELEASED FOR CONSTRUCTION |

MISSOURI HIGHWAYS AND TRANSPORTATION COMMISSION
105 WEST CAPITOL
JEFFERSON CITY, MO 65102
1-888-ASK-MODOT (1-888-275-6636)

MoDOT IMPROVE I-70 DB PROJECT 1

MILLSTONE WEBER

MO STATE CERTIFICATE OF AUTHORITY #001444 ENGINEERING

# BORING DATA

Note: For locations of borings, see Sheet No. 1.

Detailed Aug 2024
Checked Dec 2024

Note: This drawing is not to scale. Follow dimensions.

## Missouri Department of Transportation
## Construction and Materials

**BORING NO. BR 36-3A**
Page 5 of 5

**Job No.:** 20241040.00 **County:** Callaway **Route:** I-70
**Design:** **Skew:** **Location:** Kingdom City, Missouri
**Bent:** **Logged By:** SO **Operator:** LRK
**Station:** **Northing:** 1675503.187 **Date of Work:** 05/14/24-05/15/24
**Offset:** **Easting:** 857701.073 **Depth to Water:** 13.5
**Elevation:** 831.3 **Requested Northing:** **Depth Hole Open:**
**Requested Station:** **Requested Easting:** **Time Change:**
**Requested Offset:** **Equipment:** CME 550X,Split-Spoon Sampler, Shelby Tube
**Requested Elevation:** **Location Note:** (38.9441375, -91.9414315)
**Drill No.:** **Hammer Efficiency:** 90% **Drilling Method:** HSA

| Depth (ft) | Graphic | Description | Elevation (ft) | Sample Type | REC % (RQD %) | Blow Counts ($N_{60}$) | Shear Data | Field Tests | Index Tests |
|---|---|---|---|---|---|---|---|---|---|
| 100 | | 100.0-104.8' SHALE, gray, very soft to soft, highly weathered | 730 | | 100 (90) | | Qu Test Results UCS = 7.98 ksf | | |
| 105 | | 104.8-110.0' LIMESTONE, with interbedded shale, tan and gray, soft to moderately hard, moderately to slightly weathered, aphanitic, thin bedded, dense | 725 | | 77 (33) | | Qu Test Results UCS = 78.0 ksf | | |
| 110 | | Refusal at 100.0 feet. Bottom of borehole at 110.0 feet. | | | | | | | |

$N_{60}$ = (Em/60)Nm $N_{60}$ - Corrected N value for standard 60% SPT efficiency; Em - Measured hammer efficiency in percent; Nm - Observed N-value
(1) = Assumed, (2) = Actual

**Coordinate System:** **Coordinate Zone:** **Coordinate Proj. Factor:**
**Coordinate Datum:** **Coordinate Units:** U.S. Survey Feet

* Persons using this information are cautioned that the materials shown are determined by the equipment noted and accuracy of the "log of materials" is limited thereby and by judgement of the operator. THIS INFORMATION IS FOR DESIGN PURPOSES ONLY.

LETTER BOREHOLE - MODOT 20150728.GDT - 8/15/24 11:52 - \\TSIIPROJECTS\STL\GEOTECH\2024 PROJECTS\20241040.00 I-70 THIRD LANE (KINGDOM CITY TO COLUMBIA)\WORKING FILES\MODOT I-70 3RD LANE 20241040 - PRELIMINARY.GPJ

STATE OF MISSOURI
OSMAN MOHAMMED
NUMBER PE-2021003145
PROFESSIONAL ENGINEER
02/20/2025 8:18:35 AM
Osman Mohammed
MO PE-2021003145

DATE PREPARED 19-FEB-2025
ROUTE 54WB STATE MO
DISTRICT BR SHEET NO. 35
COUNTY CALLAWAY
JOB NO. JST0021
CONTRACT ID.
PROJECT NO.
BRIDGE NO. A9556

| DATE | DESCRIPTION |
|---|---|
| 01/21/2025 | REV. A - FINAL REVIEW |
| 02/19/2025 | REV. 0 - RELEASED FOR CONSTRUCTION |

MISSOURI HIGHWAYS AND TRANSPORTATION COMMISSION
105 WEST CAPITOL
JEFFERSON CITY, MO 65102
1-888-ASK-MODOT (1-888-275-6636)

MoDOT IMPROVE I-70 DB PROJECT 1

MILLSTONE WEBER

MO STATE CERTIFICATE OF AUTHORITY #001444 ENGINEERING

# BORING DATA

Note: For locations of borings, see Sheet No. 1.

Detailed Aug 2024
Checked Dec 2024

Note: This drawing is not to scale. Follow dimensions.