DRAFT FOR CONSTRUCTABILITY REVIEW - NOT FOR CONSTRUCTION

U.I.P. AND REHABILITATE (69' - 69' - 120' - 108' - 104' - 90') (90' - 120' - 91' - 120' - 116') CONTINUOUS PRESTRESSED CONCRETE BULB TEE SPANS

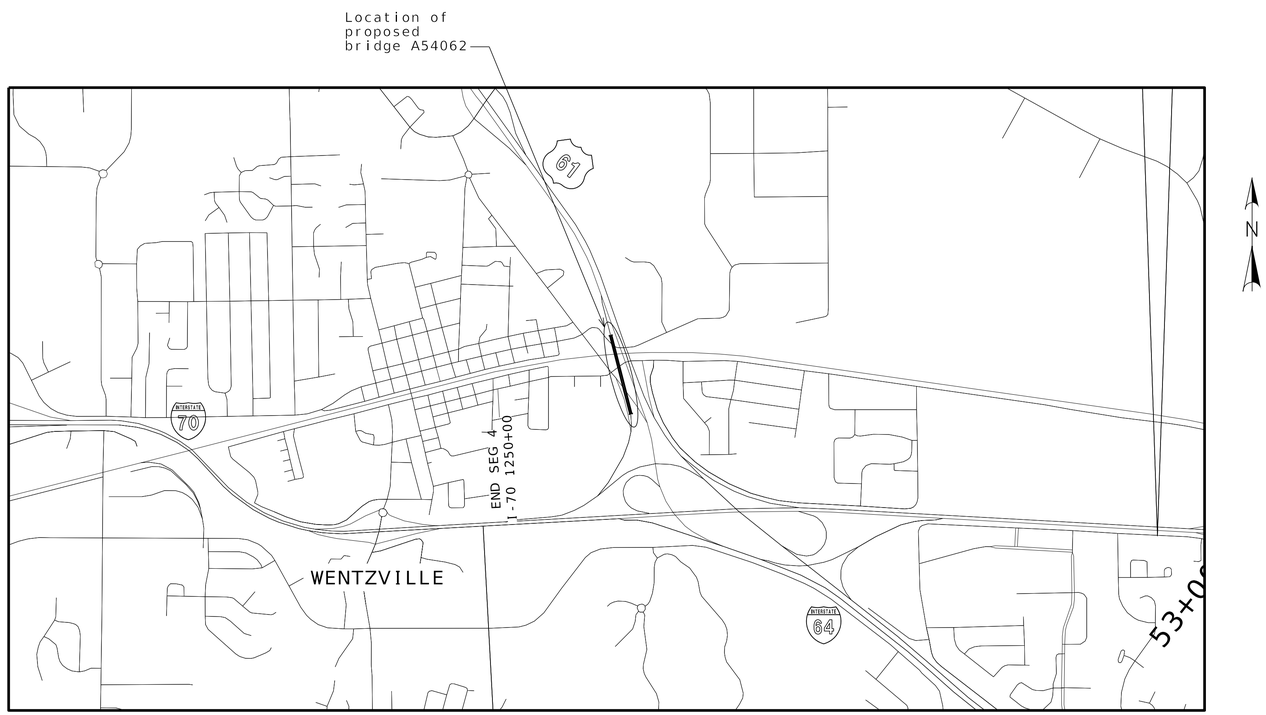

LOCATION MAP

INDEX OF DRAWINGS

1	TITLE SHEET AND INDEX OF DRAWINGS
2	GENERAL PLAN AND ELEVATION (1 OF 3)
3	GENERAL PLAN AND ELEVATION (2 OF 3)
4	GENERAL PLAN AND ELEVATION (3 OF 3)
5	DETAILS OF END BENT REPAIRS AT END BENTS 1 & 12
6	DETAILS OF REPAIRS AT BENTS 4 THRU 7
7	DETAILS OF REPAIRS AT BENTS 10 & 11
8	DETAILS OF REPAIRS AT SUPERSTRUCTURE
9	DETAILS OF STOPPER PLATES
10	SLAB DEMOITION AND REPLACEMENT AT END BENT 1 & 12
11	SEGMENTAL EXPANSION JOINT SYSTEM AT END BENTS 1 & 12
12	SLAB DEMOITION AND REPLACEMENT AT BENT 7
13	SEGMENTAL EXPANSION JOINT SYSTEM AT BENT 7
14	SLAB REPAIR DETAILS
15	BRIDGE APPROACH SLAB REPAIR
16	BAR BENDING DIAGRAMS
17	BILL OF REINFORCING

BRIDGE: RAMP 61S TO 70W OVER PEARCE BLVD.,
NORFOLK SOUTHERN RAILROAD,
PITMAN AVE. AND OLD RTE. 61

DATE PREPARED 5/1/2025
ROUTE I-70 | STATE MO
DISTRICT BR | SHEET NO. 1
COUNTY ST. CHARLES
JOB NO. JST0020
CONTRACT ID.
PROJECT NO.
BRIDGE NO. A54062

DATE	DESCRIPTION

MISSOURI HIGHWAYS AND TRANSPORTATION COMMISSION
105 WEST CAPITOL
JEFFERSON CITY, MO 65102
1-888-ASK-MODOT (1-888-275-6636)

IMPROVE 70 ALLIANCE

HNTB
715 KIRK DRIVE
KANSAS CITY, MO 64105-1310
CERTIFICATE OF AUTHORITY
NO. 001270

Bartlett & West
601 MONROE ST., SUITE 201 - JEFFERSON CITY, MO 65101
PHONE: (573) 634-2448 - FAX: (573) 634-8291
CERTIFICATE OF AUTHORITY NO. 000167 - ENGINEERING
WWW.BARTLETTWEST.COM

Designed APR 2025
Detailed APR 2025
Checked APR 2025

Note: This drawing is not to scale. Follow dimensions.

DRAFT FOR CONSTRUCTABILITY REVIEW – NOT FOR CONSTRUCTION

U.I.P AND REHABILITATE (69' - 69' - 120' - 108' - 104' - 90') (90' - 120' - 91' - 120' - 116') CONTINUOUS PRESTRESSED CONCRETE BULB TEE SPANS

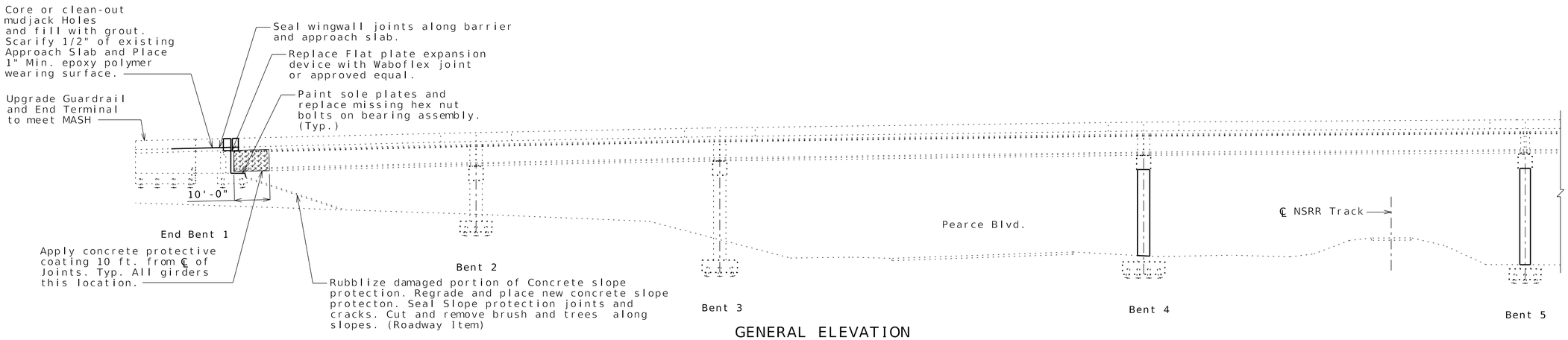

GENERAL ELEVATION

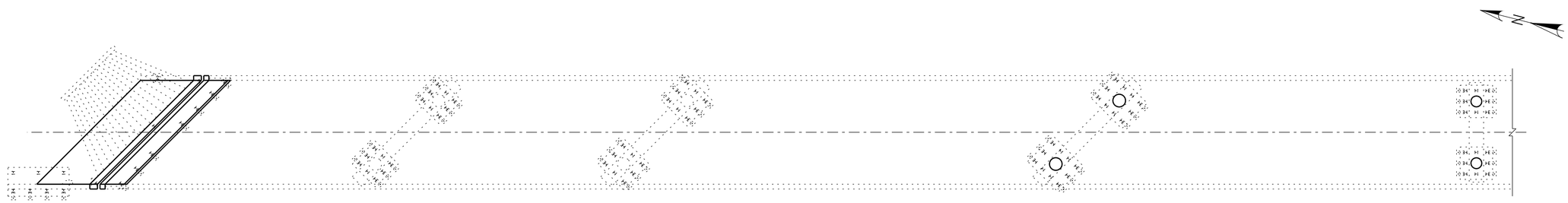

PLAN

General Notes:

Existing Design Loadings:

HS20 Modified
Military 24,0000# Tandem Axle
Earth = 120#/cu. ft.
Equivalent fluid pressure = 51#/cu.ft.
(Calculated from a Phi Angle = 24°)
35#/sq. ft. Future Wearing Surface
Superstructure: Simply supported, Non-composite for Dead Load. Continuous Composite for Live Load.

Design Unit Stresses:

Class B-1 Concrete (Barrier)	f'c = 4,000 psi
Class B-2 Concrete (Superstructure)	f'c = 4,000 psi
Reinforcing Steel (ASTM A706 Grade 60)	fy = 60,000 psi

Concrete for repairing concrete deck shall be a qualified special mortar in accordance with Sec 704 instead of the Class B-2 or B-1 Concrete.

Roadway surfacing adjacent to bridge ends shall match new bridge wearing surface (roadway item)

Outline of existing work is indicated by light dashed line. Heavy lines indicate new work.

Contractor shall verify all dimensions before ordering new materials

Traffic Handling:

Structure to be closed during construction. See Maintenance of Traffic plans for traffic control.

Concrete Protective Coating:

Protective coating for concrete bents and piers (Epoxy) shall be applied as shown on the bridge plans and in accordance with Sec 711.

Cleaning and Protective Coating (Epoxy) shall be applied as shown on the bridge plans and in accordance with Job Special Provisions.

Structural Steel Protective Coatings:

Coating limits: Anchor bolts, stopper plate and associated hardware, and sole plates of bearings, shall be coated with one 6-mil thickness of gray epoxy mastic primer applied over an SSPC-SP3 surface preparation in accordance with Sec 1081.

Reinforcing Steel:

All reinforcing steel used in reconstruction of the slab and barrier shall be epoxy coated.

Minimum clearance to reinforcing steel shall be 1-1/2", unless otherwise shown.

Minimum clearance to epoxy grouted bars per manufacturer's recommendation.

Designed APR 2025
Detailed APR 2025
Checked APR 2025

Note: This drawing is not to scale. Follow dimensions.

GENERAL PLAN AND ELEVATION (1 OF 3)

DATE PREPARED	4/29/2025
ROUTE	I-70
STATE	MO
DISTRICT	BR
SHEET NO.	2
COUNTY	ST. CHARLES
JOB NO.	JST0020
CONTRACT ID.	
PROJECT NO.	
BRIDGE NO.	A54062

DESCRIPTION | DATE

MISSOURI HIGHWAYS AND TRANSPORTATION COMMISSION
105 WEST CAPITOL
JEFFERSON CITY, MO 65102
1-888-ASK-MODOT (1-888-275-6636)

IMPROVE 70 ALLIANCE

HNTB
715 KIRK DRIVE
KANSAS CITY, MO 64105-1310
CERTIFICATE OF AUTHORITY NO. 001270

Bartlett & West
401 MONROE ST, SUITE 201 - JEFFERSON CITY, MO 65101
PHONE: 573-635-2994 - ENGINEERING
CERTIFICATE OF AUTHORITY NO. 000167 - ENGINEERING
WWW.BARTLETTWEST.COM

DRAFT FOR CONSTRUCTABILITY REVIEW – NOT FOR CONSTRUCTION

U.I.P AND REHABILITATE (69' - 69' - 120' - 108' - 104' - 90') (90' - 120' - 91' - 120' - 116') CONTINUOUS PRESTRESSED CONCRETE BULB TEE SPANS

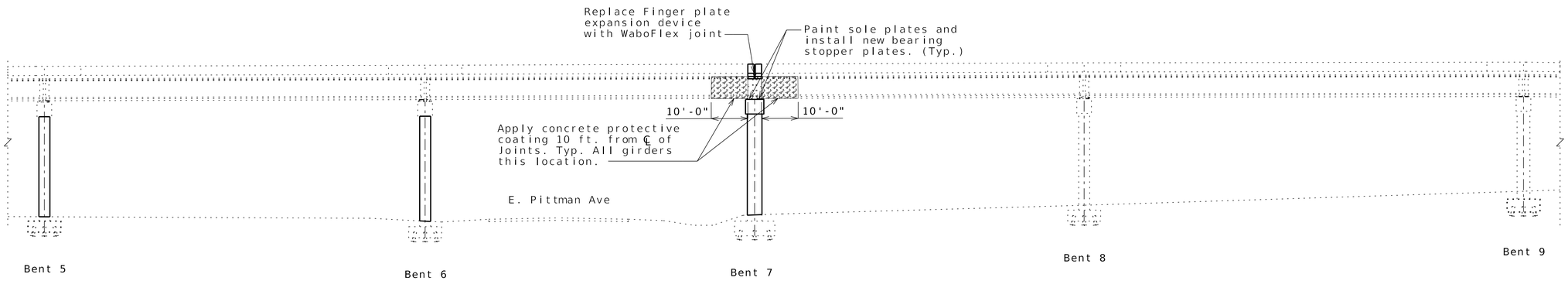

GENERAL ELEVATION

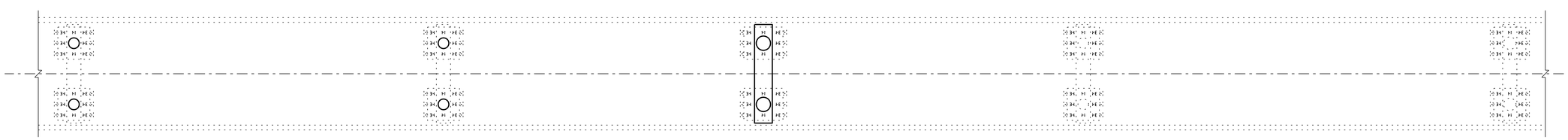

PLAN

Designed APR 2025
Detailed APR 2025
Checked APR 2025

Note: This drawing is not to scale. Follow dimensions.

GENERAL PLAN AND ELEVATION (2 OF 3)

DATE PREPARED	4/29/2025
ROUTE	I-70
STATE	MO
DISTRICT	BR
SHEET NO.	3
COUNTY	ST. CHARLES
JOB NO.	JST0020
CONTRACT ID.	
PROJECT NO.	
BRIDGE NO.	A54062

DESCRIPTION

DATE

MISSOURI HIGHWAYS AND TRANSPORTATION COMMISSION
105 WEST CAPITOL
JEFFERSON CITY, MO 65102
1-888-ASK-MODOT (1-888-275-6636)

IMPROVE 70 ALLIANCE

HNTB
715 KIRK DRIVE
KANSAS CITY, MO 64105-1310
CERTIFICATE OF AUTHORITY
NO. 001270

Bartlett & West
601 MONROE ST., SUITE 201 - JEFFERSON CITY, MO 65101
PHONE: (573) 634-2448
CERTIFICATE OF AUTHORITY NO. 000167 - ENGINEERING
WWW.BARTLETTWEST.COM

DRAFT FOR CONSTRUCTABILITY REVIEW – NOT FOR CONSTRUCTION

U.I.P AND REHABILITATE (69' - 69' - 120' - 108' - 104' - 90') (90' - 120' - 91' - 120' - 116') CONTINUOUS PRESTRESSED CONCRETE BULB TEE SPANS

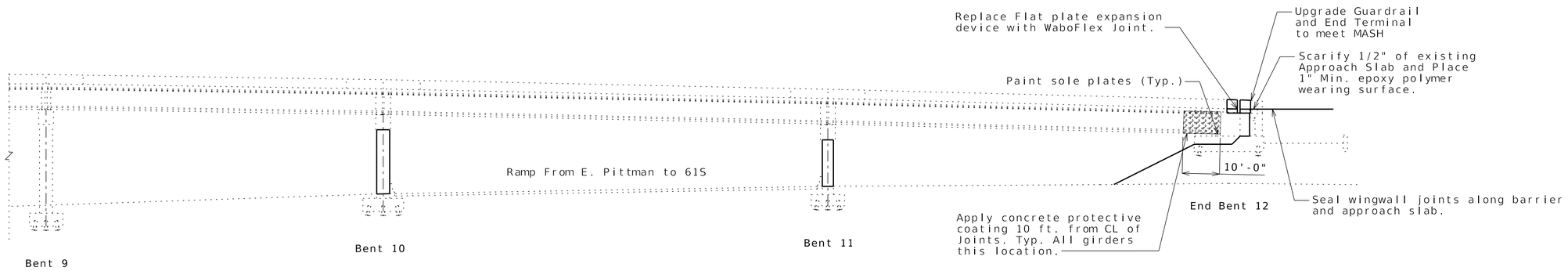

GENERAL ELEVATION

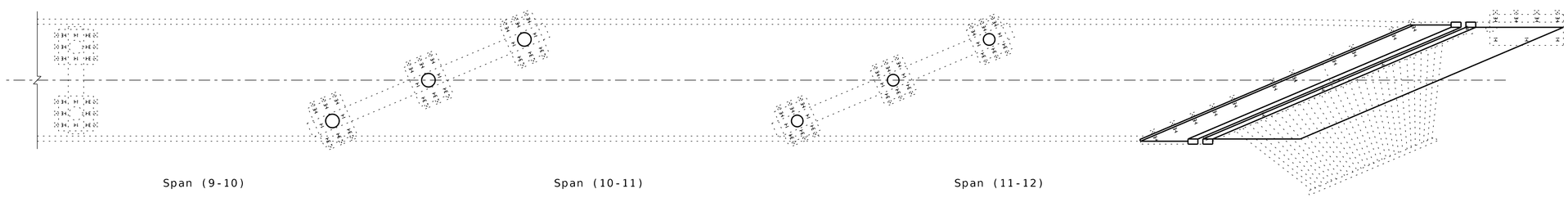

PLAN

Designed APR 2025
Detailed APR 2025
Checked APR 2025

Note: This drawing is not to scale. Follow dimensions.

Sheet 4 of 17

GENERAL PLAN AND ELEVATION (3 OF 3)

DATE PREPARED	4/29/2025
ROUTE	I-70
STATE	MO
DISTRICT	BR
SHEET NO.	4
COUNTY	ST. CHARLES
JOB NO.	JST0020
CONTRACT ID.	
PROJECT NO.	
BRIDGE NO.	A54062

DESCRIPTION

DATE

MISSOURI HIGHWAYS AND TRANSPORTATION COMMISSION
105 WEST CAPITOL
JEFFERSON CITY, MO 65102
1-888-ASK-MODOT (1-888-275-6636)

IMPROVE 70 ALLIANCE

HNTB
715 KIRK DRIVE
KANSAS CITY, MO 64105-1310
CERTIFICATE OF AUTHORITY
NO. 001270

Bartlett & West
601 MONROE ST., SUITE 201 - JEFFERSON CITY, MO 65101
PHONE: (573) 634-2448
CERTIFICATE OF AUTHORITY NO. 000167 - ENGINEERING
WWW.BARTLETTWEST.COM

DRAFT FOR CONSTRUCTABILITY REVIEW – NOT FOR CONSTRUCTION

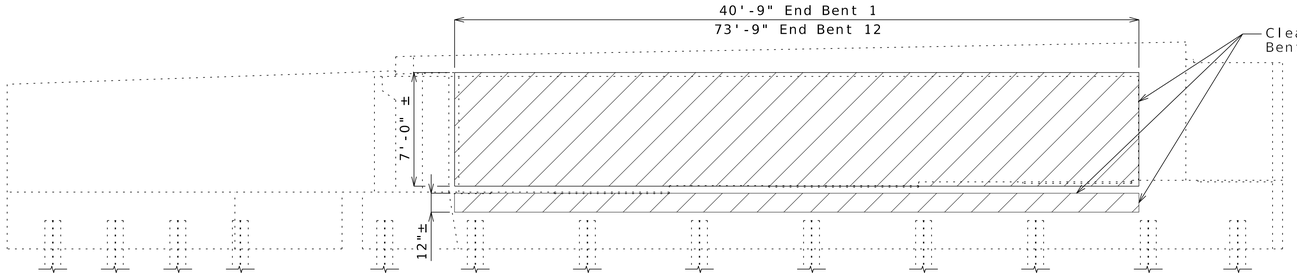

ELEVATION

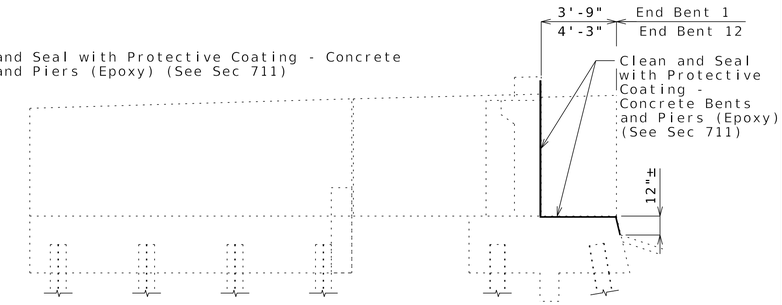

END VIEW

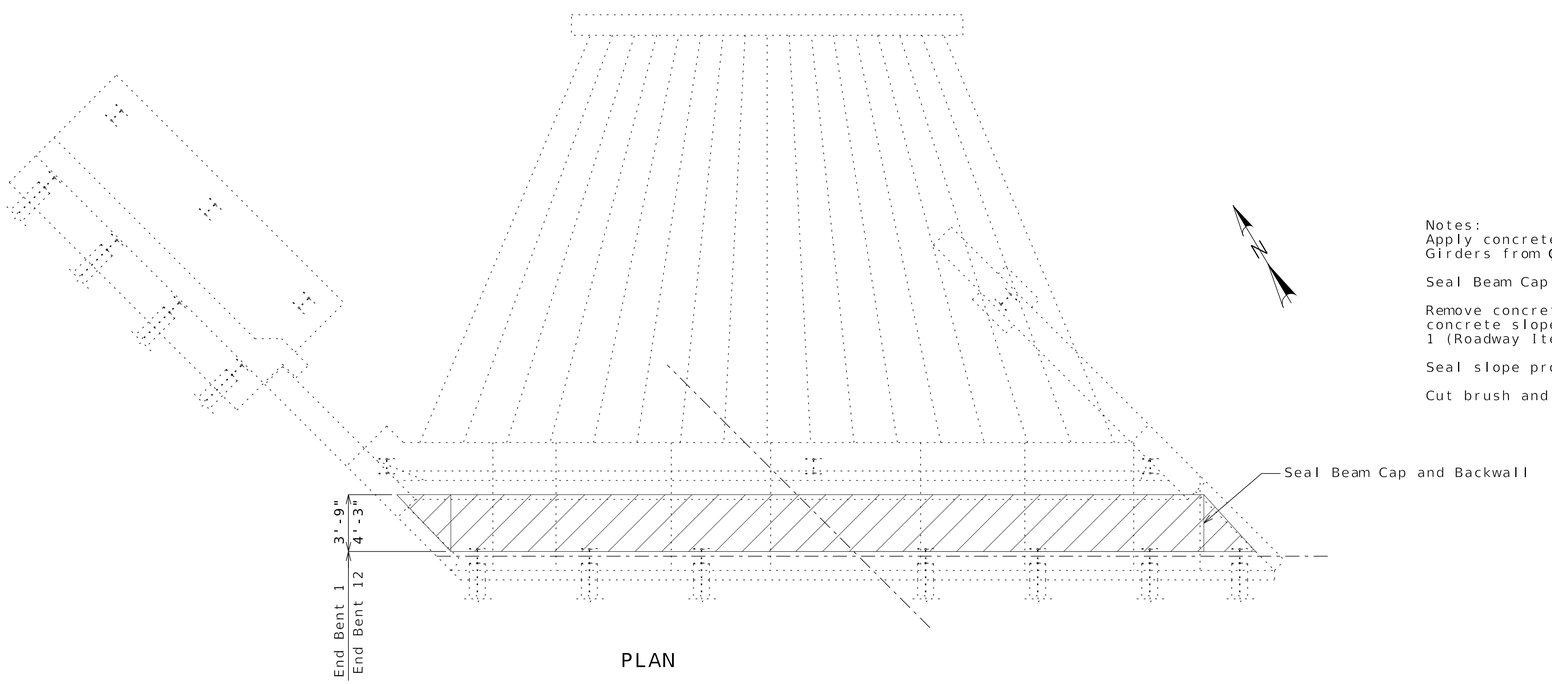

PLAN

Notes:
Apply concrete protective coating to 10 Lin. Ft. of P/S Girders from ℄ of joint, See Sheet 8 of 17

Seal Beam Cap and Backwall as shown, (See Sec 711)

Remove concrete slope protection, regrade and place new concrete slope protection (damaged portions only), Bent 1 (Roadway Item)

Seal slope protection joints and cracks (Roadway Item)

Cut brush and trees growing along slopes (Roadway Item)

Designed	APR 2025
Detailed	APR 2025
Checked	APR 2025

Note: This drawing is not to scale. Follow dimensions.

DETAILS OF END BENT REPAIRS AT END BENTS 1 & 12

DATE PREPARED	4/29/2025
ROUTE	I-70
STATE	MO
DISTRICT	BR
SHEET NO.	5
COUNTY	ST. CHARLES
JOB NO.	JST0020
CONTRACT ID.	
PROJECT NO.	
BRIDGE NO.	A54062

DESCRIPTION

DATE

MISSOURI HIGHWAYS AND TRANSPORTATION COMMISSION
105 WEST CAPITOL
JEFFERSON CITY, MO 65102
1-888-ASK-MODOT (1-888-275-6636)

IMPROVE 70 ALLIANCE

HNTB
715 KIRK DRIVE
KANSAS CITY, MO 64105-1310
CERTIFICATE OF AUTHORITY
NO. 001270

Bartlett & West
601 MONROE ST., SUITE 201 - JEFFERSON CITY, MO 65101
(573) 635-2994 FAX (573) 635-2995
CERTIFICATE OF AUTHORITY NO. 000107 - ENGINEERING
WWW.BARTLETTWEST.COM

DRAFT FOR CONSTRUCTABILITY REVIEW – NOT FOR CONSTRUCTION

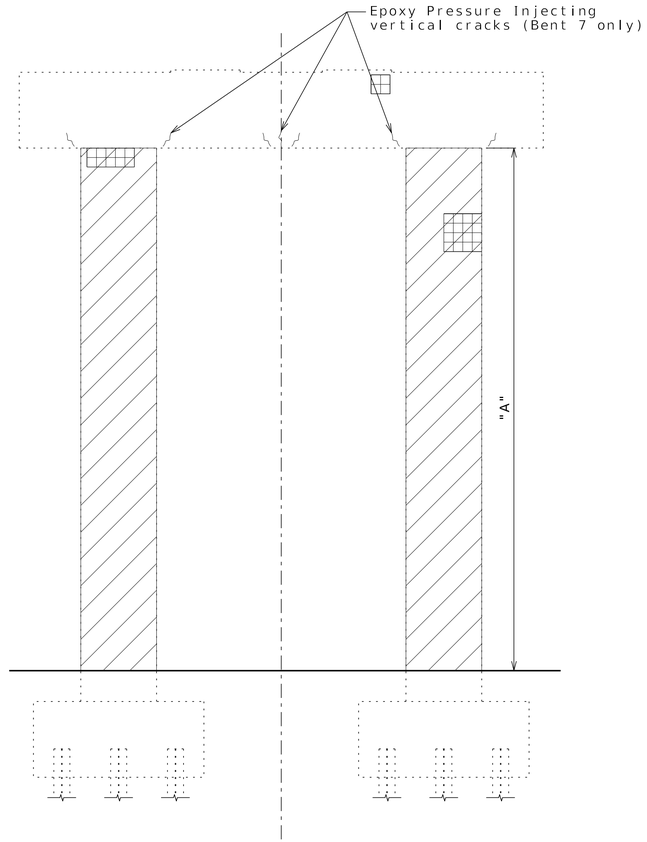

ELEVATION

Bent	Dim "A"
4	24'-0" ±
5	26'-6" ±
6	28'-0" ±
7	27'-0" ±

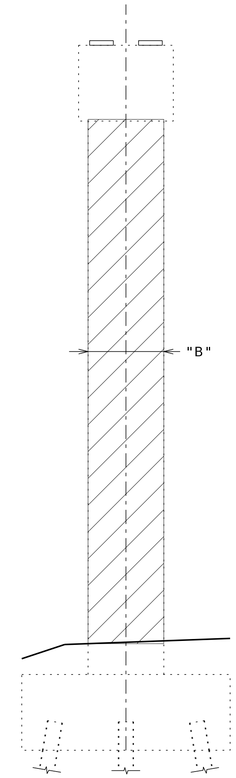

END VIEW

Bent	Dim "B"
4	3'-6"
5	3'-0"
6	3'-0"
7	4'-0"

Epoxy Pressure Injection Notes:
The epoxy material shall consist of a two-component system in accordance with the requirements of ASTM C 881, Type IV, Grade 1, except that the viscosity shall be a maximum of 4.5 poise (0.45 Pa*s). The Class designation of the epoxy shall be determined according to the temperature that exists on the job.

The contractor shall furnish manufacturer's certification that the material supplied is in accordance with these specifications. The certification shall include or have attached typical test results for all specified properties required by ASTM C 881 for the injecting resin. The engineer reserves the right to sample and test any or all material supplied.

The surface to receive the epoxy grout shall be cleaned of laitance, grease and foreign matter by sandblasting. The cracks shall be cleaned of debris by using oil-free and water-free compressed air or vacuum. After the cracks are cleaned, the epoxy shall be injected in accordance with manufacturer's recommendations. The temporary surface seal and placement and method of attachment of injection ports shall be in accordance with the epoxy manufacturer's recommendations.

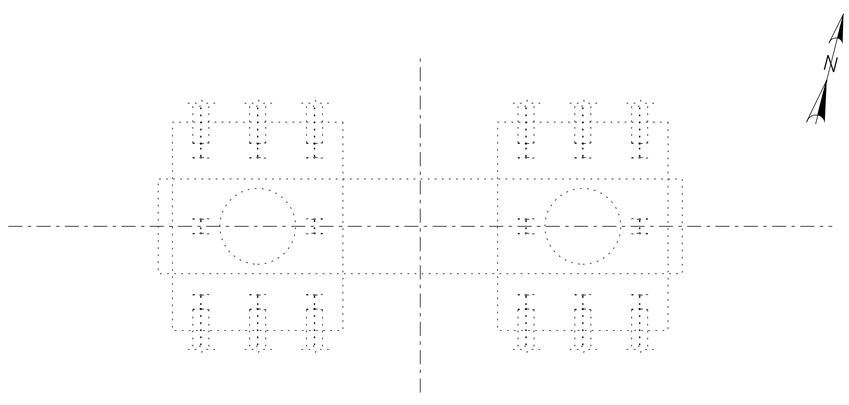

PLAN

Notes:
Inject Epoxy into cap for Crack Repair

Repair Delaminations in Cap and Column

Repair delaminations (Bent 7 only) with formed substructure repair in accordance with Sec 704. Unformed repairs may be performed at the contractor's option. If unformed repair is used, Shotcrete shall be required in accordance with Shotcrete Concrete Repair JSP.

Clean and Seal with Protective Coating - Concrete Bents and Piers (Epoxy) (See Sec 711)

Designed APR 2025
Detailed APR 2025
Checked APR 2025

Note: This drawing is not to scale. Follow dimensions.

DETAILS OF REPAIRS AT BENTS 4 THRU 7

DATE PREPARED	4/29/2025
ROUTE	I-70
STATE	MO
DISTRICT	BR
SHEET NO.	6
COUNTY	ST. CHARLES
JOB NO.	JST0020
CONTRACT ID.	
PROJECT NO.	
BRIDGE NO.	A54062

DESCRIPTION

DATE

MISSOURI HIGHWAYS AND TRANSPORTATION COMMISSION
105 WEST CAPITOL
JEFFERSON CITY, MO 65102
1-888-ASK-MODOT (1-888-275-6636)

IMPROVE 70 ALLIANCE

HNTB
715 KIRK DRIVE
KANSAS CITY, MO 64105-1310
CERTIFICATE OF AUTHORITY
NO. 001270

Bartlett & West
601 MONROE ST, SUITE 201 • JEFFERSON CITY, MO 65101
PHONE: 573-635-5331
CERTIFICATE OF AUTHORITY NO. 000167 - ENGINEERING
WWW.BARTLETTWEST.COM

DRAFT FOR CONSTRUCTABILITY REVIEW – NOT FOR CONSTRUCTION

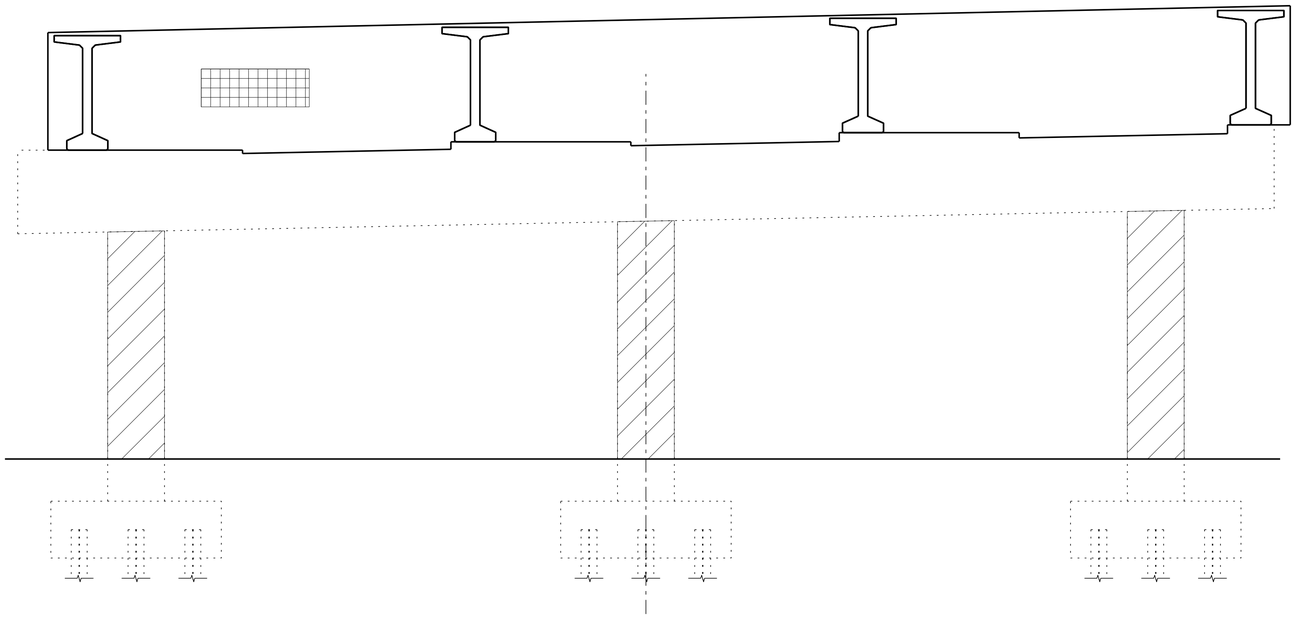

ELEVATION

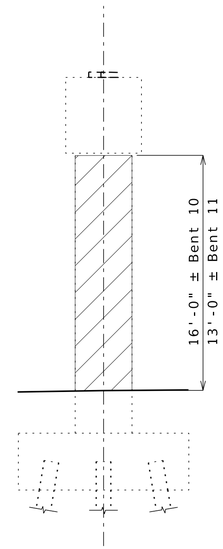

END VIEW

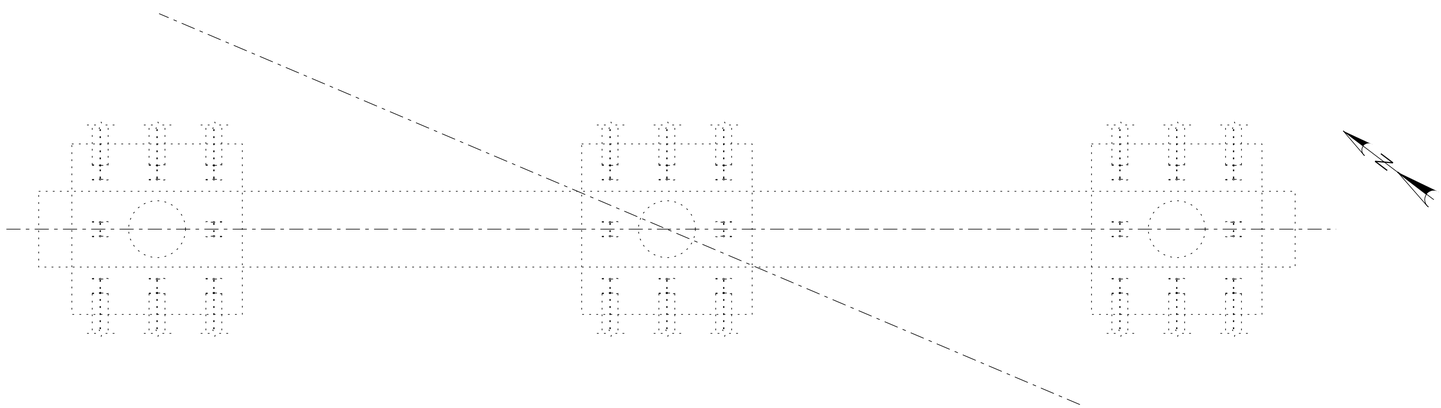

PLAN

Notes:

Clean and apply protective coating to all exposed surfaces of concrete diaphragm, Bent 11 only.

Clean and Seal with Protective Coating - Concrete Bents and Piers (Epoxy) (See Sec 711)

Designed APR 2025
Detailed APR 2025
Checked APR 2025

Note: This drawing is not to scale. Follow dimensions.

Sheet 7 of 17

DETAILS OF REPAIRS AT BENTS 10 & 11

DATE PREPARED	4/29/2025
ROUTE	I-70
STATE	MO
DISTRICT	BR
SHEET NO.	7
COUNTY	ST. CHARLES
JOB NO.	JST0020
CONTRACT ID.	
PROJECT NO.	
BRIDGE NO.	A54062

DATE	DESCRIPTION

MISSOURI HIGHWAYS AND TRANSPORTATION COMMISSION
105 WEST CAPITOL
JEFFERSON CITY, MO 65102
1-888-ASK-MODOT (1-888-275-6636)

IMPROVE 70 ALLIANCE

HNTB
715 KIRK DRIVE
KANSAS CITY, MO 64105-1310
CERTIFICATE OF AUTHORITY
NO. 001270

Bartlett & West
601 MONROE ST., SUITE 201 - JEFFERSON CITY, MO 65101
PHONE: (573) 634-2448
CERTIFICATE OF AUTHORITY NO. 000167 - ENGINEERING
WWW.BARTLETTWEST.COM

DRAFT FOR CONSTRUCTABILITY REVIEW – NOT FOR CONSTRUCTION

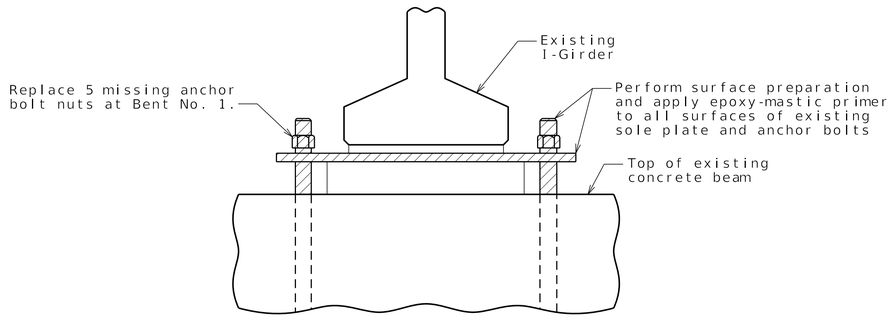

BENTS NO. 1, 7, AND 12

TYPICAL SECTION OF BEARING ASSEMBLY SHOWING EPOXY-MASTIC OVERCOAT OF SOLE PLATES AND ANCHOR BOLTS

(Typical at 16 Bearing Locations)

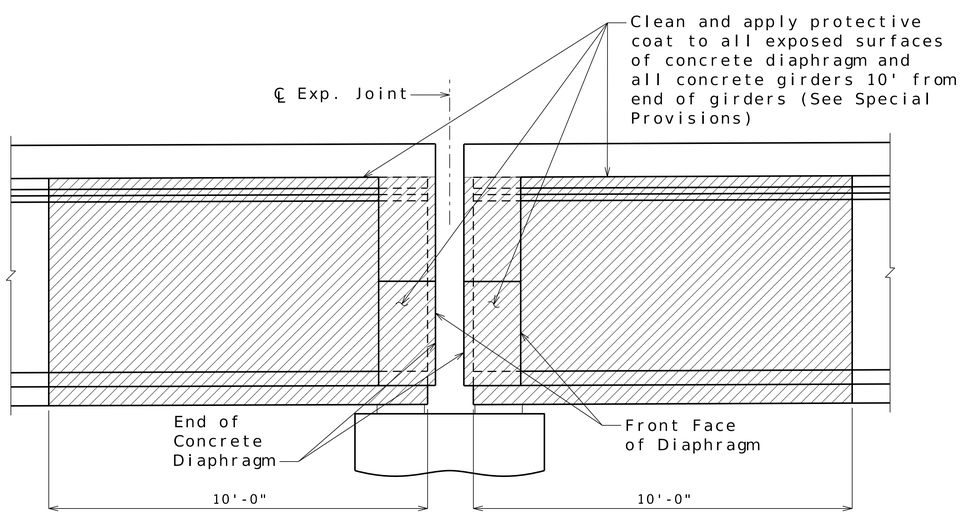

DETAIL SHOWING LIMITS OF CLEANING AND PROTECTIVE COATING INT. BENT NO. 7

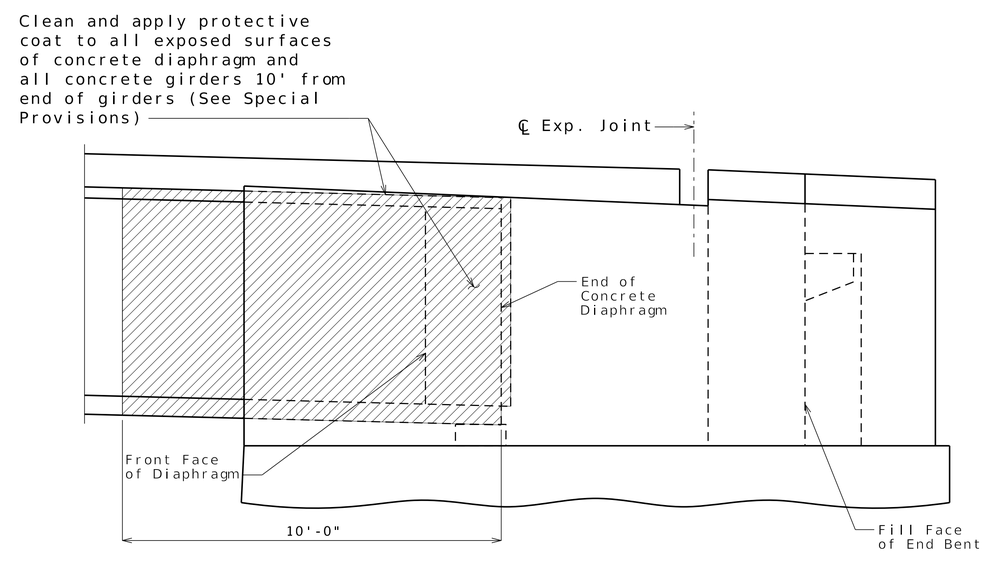

DETAIL SHOWING LIMITS OF CLEANING AND PROTECTIVE COATING END BENTS NO. 1 AND 12

(End Bent No. 12 shown, End Bent No. 1 similar)

Designed	APR 2025
Detailed	APR 2025
Checked	APR 2025

Note: This drawing is not to scale. Follow dimensions.

DETAILS OF REPAIRS AT SUPERSTRUCTURE

DATE PREPARED	4/29/2025
ROUTE	I-70
STATE	MO
DISTRICT	BR
SHEET NO.	8
COUNTY	ST. CHARLES
JOB NO.	JST0020
CONTRACT ID.	
PROJECT NO.	
BRIDGE NO.	A54062

DESCRIPTION	DATE

MISSOURI HIGHWAYS AND TRANSPORTATION COMMISSION
105 WEST CAPITOL
JEFFERSON CITY, MO 65102
1-888-ASK-MODOT (1-888-275-6636)

IMPROVE 70 ALLIANCE

HNTB
715 KIRK DRIVE
KANSAS CITY, MO 64105-1310
CERTIFICATE OF AUTHORITY
NO. 001270

Bartlett & West
601 MONROE ST., SUITE 201 - JEFFERSON CITY, MO 65101
(573) 634-2448 - FAX (573) 634-8307
CERTIFICATE OF AUTHORITY NO. E00707 - ENGINEERING
WWW.BARTLETTWEST.COM

DRAFT FOR CONSTRUCTABILITY REVIEW – NOT FOR CONSTRUCTION

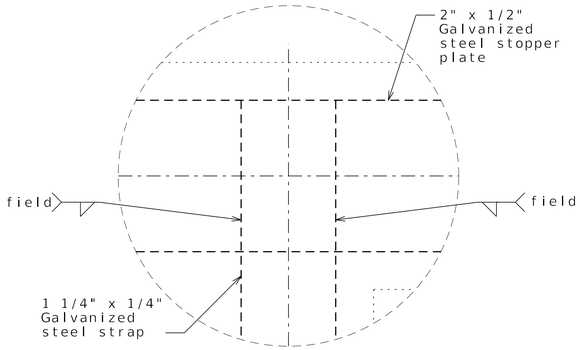

DETAIL A

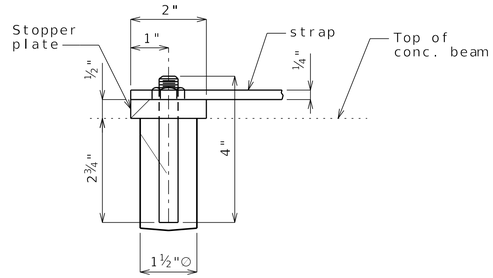

SECTION B-B

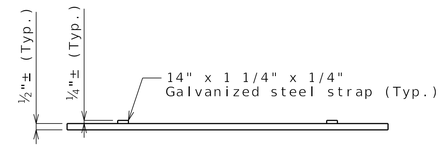

ELEVATION OF GALVANIZED
STEEL STOPPER PLATE

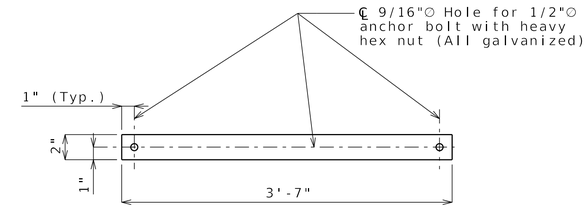

PLAN OF GALVANIZED
STEEL STOPPER PLATE

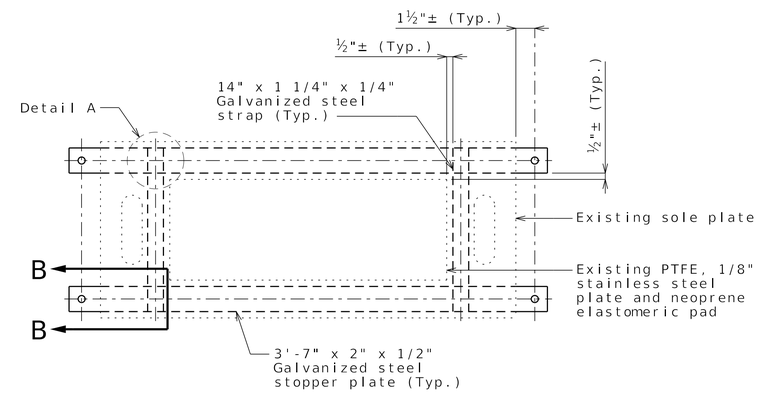

PART PLAN SHOWING STOPPER PLATE AT
INT. BENT NO. 7 - SPAN (6-7) & INT. BENT NO. 7 - SPAN (7-8)
(Existing girder not shown for clarity)
(No. Assemblies Required: 8)

Notes:

Structural steel for the stopper plates and straps shall be ASTM A709 Grade 50 and shall be galvanized in accordance with Sec 1081.

Stopper plates and straps shall be provided to prevent loss of support due to creeping of bearings.

Shift new anchor bolt well the minimum extent necessary to avoid damaging the existing beam reinforcing.

Anchor bolts and heavy hex nuts shall be galvanized in accordance with Sec 1081.

Galvanizing material shall be omitted or removed one inch clear of field weld locations. The method used to omit or remove the galvanizing material shall be masking, grinding or other methods as approved by the engineer. Field galvanize the field weld area in accordance with Sec 1081 by zinc alloy stick method.

Designed	APR 2025
Detailed	APR 2025
Checked	APR 2025

Note: This drawing is not to scale. Follow dimensions.

DETAILS OF STOPPER PLATES

DATE PREPARED	4/29/2025
ROUTE	I-70
STATE	MO
DISTRICT	BR
SHEET NO.	9
COUNTY	ST. CHARLES
JOB NO.	JST0020
CONTRACT ID.	
PROJECT NO.	
BRIDGE NO.	A54062

DESCRIPTION

DATE

MISSOURI HIGHWAYS AND TRANSPORTATION COMMISSION
105 WEST CAPITOL
JEFFERSON CITY, MO 65102
1-888-ASK-MODOT (1-888-275-6636)

IMPROVE 70 ALLIANCE

HNTB
715 KIRK DRIVE
KANSAS CITY, MO 64105-1310
CERTIFICATE OF AUTHORITY
NO. 001270

Bartlett & West
601 MONROE ST., SUITE 201 - JEFFERSON CITY, MO 65101
PHONE: 573-893-4336 FAX: 573-893-8313
CERTIFICATE OF AUTHORITY NO. 000107 - ENGINEERING
WWW.BARTLETTWEST.COM

DRAFT FOR CONSTRUCTABILITY REVIEW – NOT FOR CONSTRUCTION

	"A"	"B"	"C"	"D"
End Bent 1	17"	2'-5"	3	3
End Bent 12	2'-6¾"	4'-4¾"	5	5

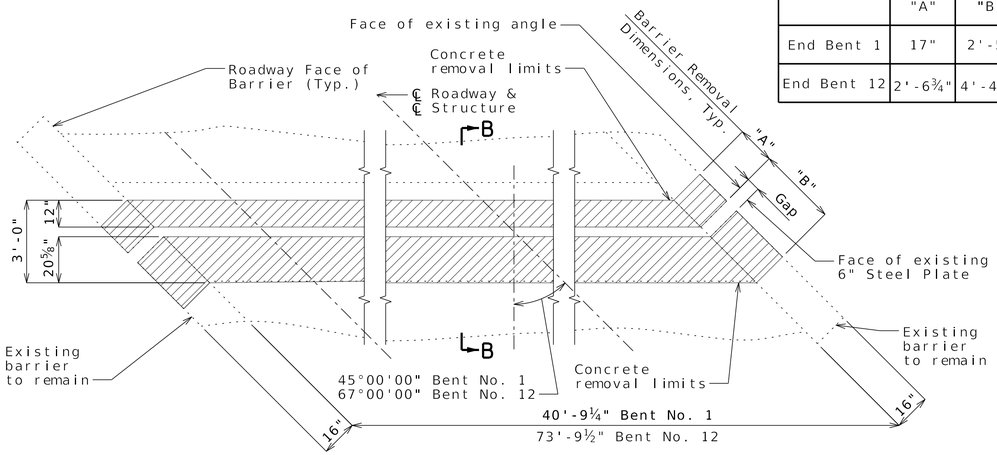

REMOVAL PLAN AT INTERMEDIATE END BENT NO. 1

End Bent No. 12 Similar and Opposite Hand

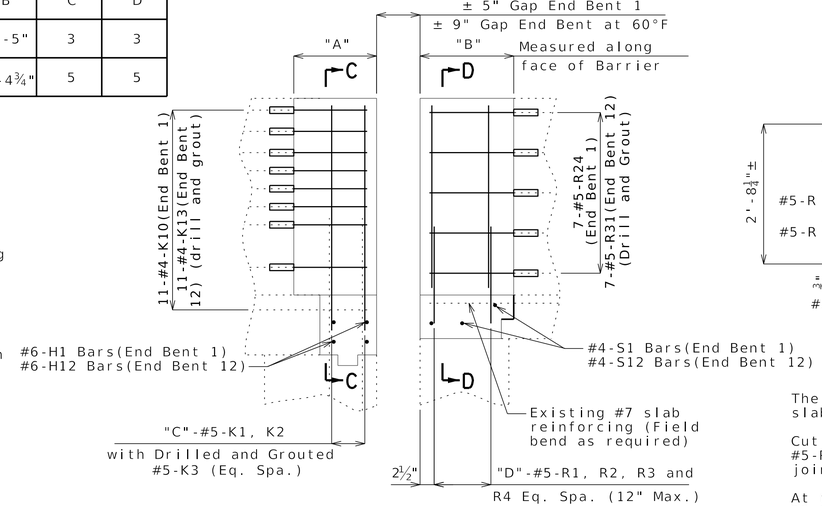

PART ELEVATION OF BARRIER

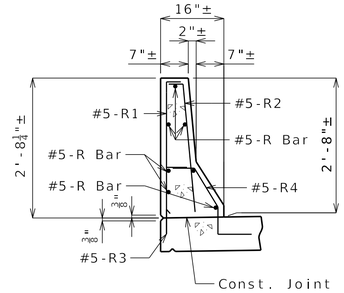

SECTION D-D

The cross-sectional area above the slab is 2.27 square feet.

Cut or bend existing longitudinal #5-R bars & #5-R4 to clear segmental joint blockout by 2" as needed.

At the contractors option the R1 and R2 Bars can be substituted for a single bar. See Sheet 12 for details.

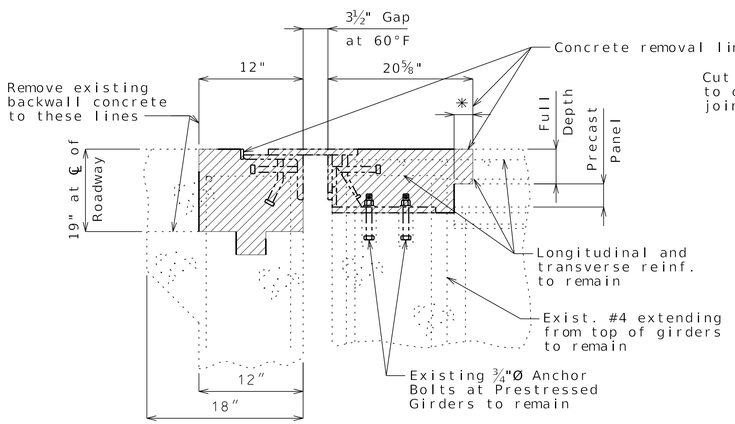

SECTION B-B

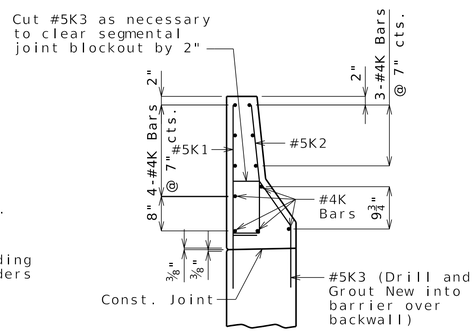

SECTION C-C

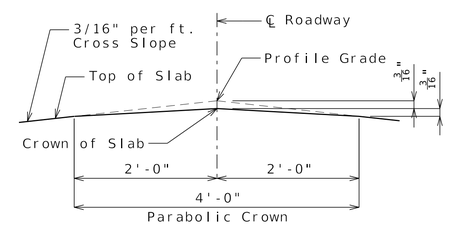

CROWN DETAIL AT END BENT NO. 1

SUPERELEVATION AT END BENT NO. 12

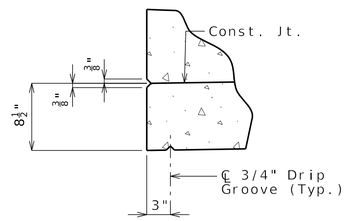

DRIP GROOVE DETAIL

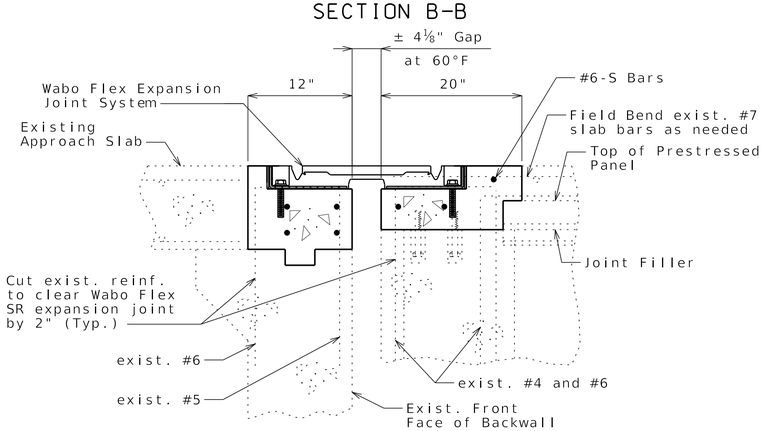

SLAB REPLACEMENT DETAIL

Note: Full depth slab replacement required over Girder and overhangs.

Notes:

Remove concrete in accordance with Sec 216.

Removal shall include removal of the existing expansion joint armor and anchorage as detailed.

Concrete removal to provide 1" minimum clearance beneath exposed reinforcing to remain. Removal Depth may be increased as needed to accommodate new anchorage requirements for the replacement joint as per the manufacturer's recommendations.

Any existing concrete traffic delineators on the barrier curb removed during the joint replacement process shall be replaced with like and kind.

Barrier curb to be built parallel to grade with barrier curb joints on superstructure. Barrier Curb on end bent shall be built normal to grade.

* Contractor shall avoid damage to P/S Panel that extends a maximum of 4 1/8" past the cut line

Top of WaboFlex Joint shall be recessed 1/4" from the top of finished overlay.

Lap Splice lengths where required shall be: 2'-5" for #4 Bars and 3'-7" for #6 Bars

All exposed edges of barrier curb (Type B) shall match existing barrier curb edges.

Existing Reinforcing may be replaced with like and in kind in accordance with Sec 216.

The contractor may opt to preserve existing reinforcing in-place in lieu of drilling and grouting new bars.

Any damage to the Existing Reinforcing Epoxy Coating shall be repaired according to Sec 710.

Concrete work shall be in accordance with Sec 704.

Embedment for drilled and grouted bars into existing concrete is calculated at 9 times the bar diameter. Contractor shall adjust bar length to account for embedment changes per manufacturer's recommendation.

The contractor shall use one of the qualified resin anchor systems in accordance with Sec 1039.

Designed APR 2025
Detailed APR 2025
Checked APR 2025

SLAB DEMOLITION AND REPLACEMENT AT END BENTS 1 & 12

DATE PREPARED	4/29/2025
ROUTE	I-70
STATE	MO
DISTRICT	BR
SHEET NO.	10
COUNTY	ST. CHARLES
JOB NO.	JST0020
CONTRACT ID.	
PROJECT NO.	
BRIDGE NO.	A54062

DESCRIPTION

DATE

MISSOURI HIGHWAYS AND TRANSPORTATION COMMISSION

105 WEST CAPITOL
JEFFERSON CITY, MO 65102
1-888-ASK-MODOT (1-888-275-6636)

IMPROVE 70 ALLIANCE

HNTB
715 KIRK DRIVE
KANSAS CITY, MO 64105-1310
CERTIFICATE OF AUTHORITY NO. 001270

Bartlett & West
601 MONROE ST, SUITE 201 - JEFFERSON CITY, MO 65101
TEL: 573-635-7627 FAX: 573-635-7628
CERTIFICATE OF AUTHORITY NO. 000157 - ENGINEERING
WWW.BARTLETTWEST.COM

DRAFT FOR CONSTRUCTABILITY REVIEW – NOT FOR CONSTRUCTION

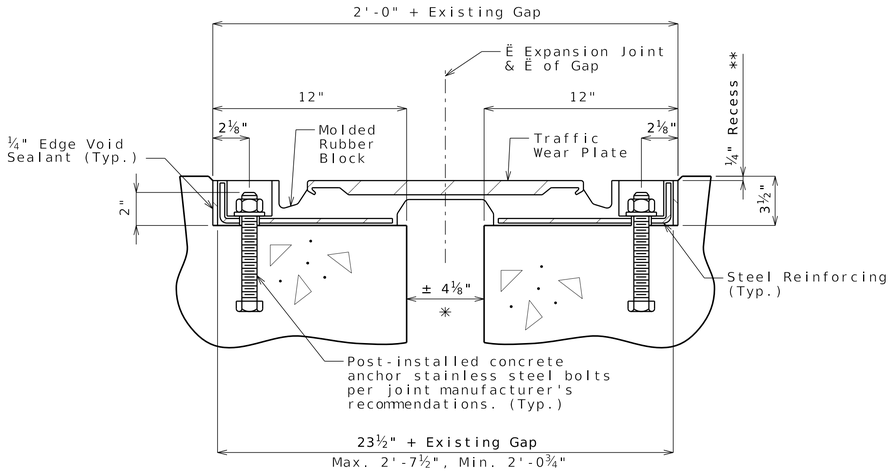

SECTION THRU JOINT

(Use SR 6.5A Joint at End Bent 1 and SR 9 at End Bent 12 unless otherwise noted by the manufacturer)

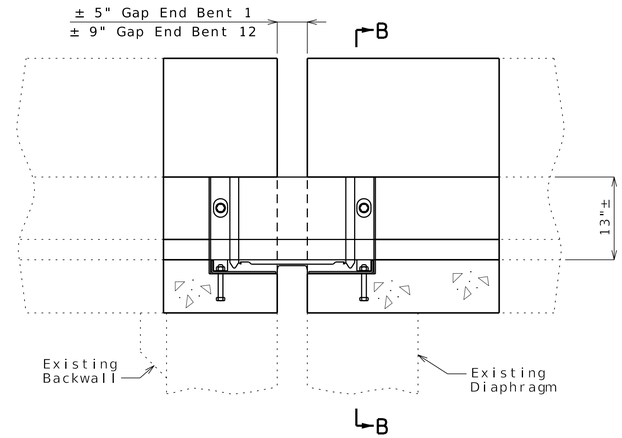

PART ELEVATION OF BARRIER

End Bent No. 1 Shown,
End Bent No. 12 Opposite Hand

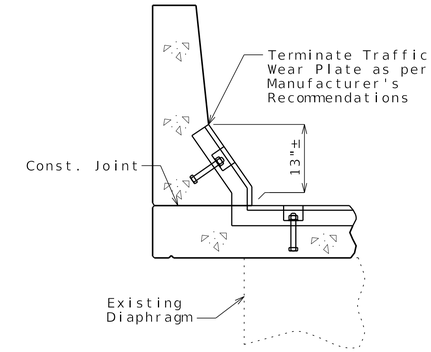

SECTION B-B

* Existing plans provided 3 1/2" gap from face of 8"x6"x5/8" angle to mounted 6"x5/8" plate on superstructure at 60°F at time of construction. For replacement joint, adjust gap dimension as needed to match backwall and diaphragm faces.

** 1/4" recess shall be measured from top of finished overlay.

Notes:

The installation temperature shall be taken as the actual air temperature averaged over the 24-hour period immediately preceding installation.

Replacement expansion joint shall be a WaboFlex Model SR6.5A as manufactured by Watson Bowman Acme Corp. Amherst New York. The new joint is to be installed per manufacturer's recommendations.

The expansion device shall be fabricated to match the crown of the roadway.

Designed	APR 2025
Detailed	APR 2025
Checked	APR 2025

Note: This drawing is not to scale. Follow dimensions.

SEGMENTAL EXPANSION JOINT SYSTEM AT END BENTS 1 & 12

DATE PREPARED	4/29/2025
ROUTE	I-70
STATE	MO
DISTRICT	BR
SHEET NO.	11
COUNTY	ST. CHARLES
JOB NO.	JST0020
CONTRACT ID.	
PROJECT NO.	
BRIDGE NO.	A54062

DESCRIPTION

DATE

MISSOURI HIGHWAYS AND TRANSPORTATION COMMISSION

105 WEST CAPITOL
JEFFERSON CITY, MO 65102
1-888-ASK-MODOT (1-888-275-6636)

IMPROVE 70 ALLIANCE

HNTB
715 KIRK DRIVE
KANSAS CITY, MO 64105-1310
CERTIFICATE OF AUTHORITY
NO. 001270

Bartlett & West
601 MONROE ST., SUITE 201 - JEFFERSON CITY, MO 65101
PHONE: (573) 635-2994
CERTIFICATE OF AUTHORITY NO. 000167 - ENGINEERING
WWW.BARTLETTWEST.COM

DRAFT FOR CONSTRUCTABILITY REVIEW – NOT FOR CONSTRUCTION

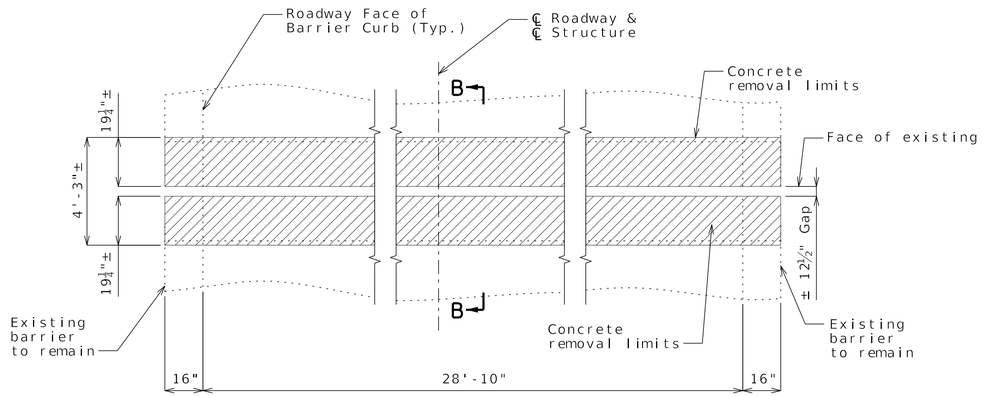

REMOVAL PLAN AT INTERMEDIATE BENT NO. 7

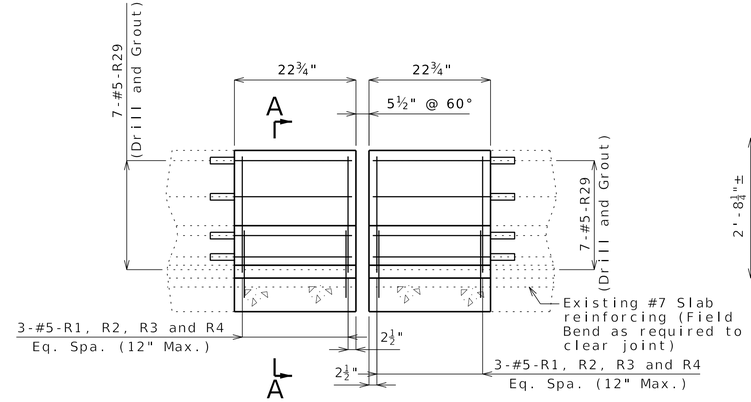

PART ELEVATION OF BARRIER

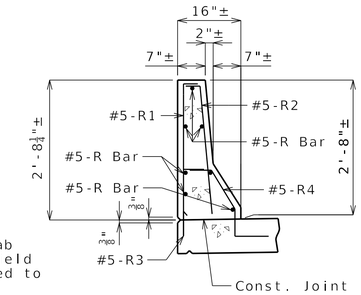

SECTION A-A

The cross-sectional area above the slab is 2.27 square feet.

Cut or bend existing longitudinal #5-R bars & #5-R4 to clear segmental joint blockout by 2" as needed.

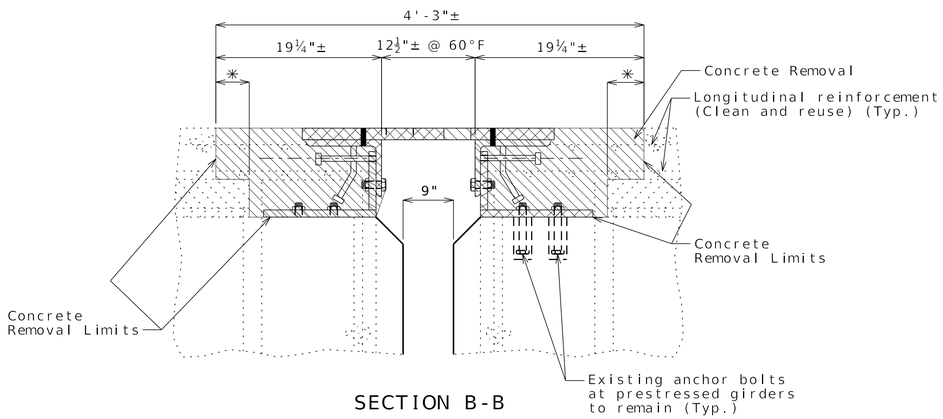

SECTION B-B

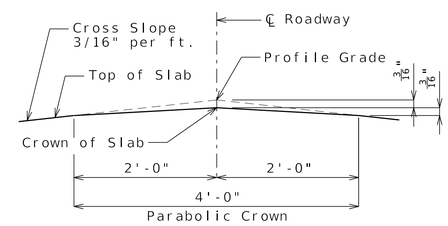

CROWN DETAIL

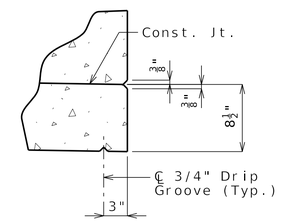

DRIP GROOVE DETAIL

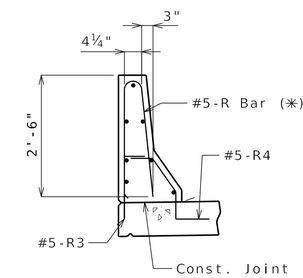

R-BAR PERMISSIBLE ALTERNATE SHAPE

(✳) The R1 and R2 bar combination may be furnushed as one bar, as shown, at the contractor's option. (All dimensions out to out.)

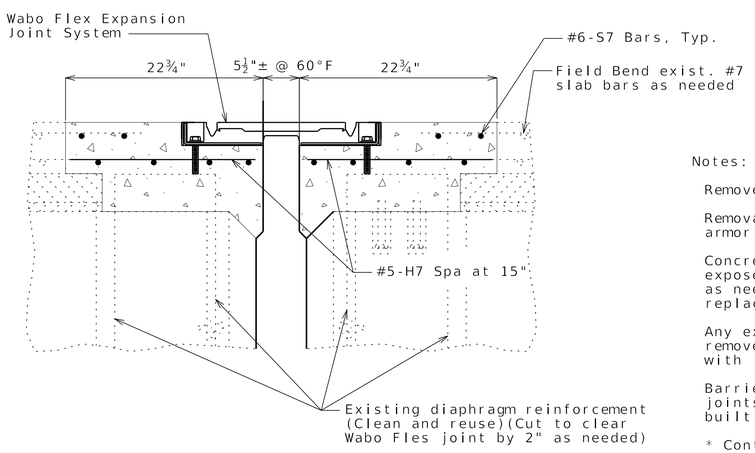

SLAB REPLACEMENT DETAIL

Note: Full depth slab replacement required over Girder and overhangs.

Notes:

Remove concrete in accordance with Sec 216.

Removal shall include removal of the existing expansion joint armor and anchorage as detailed.

Concrete removal to provide 1" minimum clearance beneath exposed reinforcing to remain. Removal Depth may be increased as needed to accommodate new anchorage requirements for the replacement joint as per the manufacturer's recommendations.

Any existing concrete traffic delineators on the barrier curb removed during the joint replacement process shall be replaced with like and kind.

Barrier curb to be built parallel to grade with barrier curb joints on superstructure. Barrier Curb on end bent shall be built normal to grade.

* Contractor shall avoid damage to P/S Panel that extends a maximum of 4 1/2" past the cut line

Top of WaboFlex Joint shall be recessed 1/4" from the top of finished overlay.

All exposed edges of barrier curb (Type B) shall match existing barrier curb edges.

Existing Reinforcing may be replaced with like and in kind in accordance with Sec 216.

The contractor may opt to preserve existing reinforcing in-place in lieu of drilling and grouting new bars.

Any damage to the Existing Reinforcing Epoxy Coating shall be repaired according to Sec 710.

Concrete work shall be in accordance with Sec 704.

Embedment for drilled and grouted bars into existing concrete is calculated at 9 times the bar diameter. Contractor shall adjust bar length to account for embedment changes per manufacturer's recommendation.

The contractor shall use one of the qualified resin anchor systems in accordance with Sec 1039.

Designed APR 2025
Detailed APR 2025
Checked APR 2025

SLAB DEMOLITION AND REPLACEMENT AT BENT 7

DATE PREPARED	
4/29/2025	
ROUTE	STATE
I-70	MO
DISTRICT	SHEET NO.
BR	12
COUNTY	
ST. CHARLES	
JOB NO.	
JST0020	
CONTRACT ID.	
PROJECT NO.	
BRIDGE NO.	
A54062	

DESCRIPTION

DATE

MISSOURI HIGHWAYS AND TRANSPORTATION COMMISSION
105 WEST CAPITOL
JEFFERSON CITY, MO 65102
1-888-ASK-MODOT (1-888-275-6636)

IMPROVE 70 ALLIANCE

HNTB
715 KIRK DRIVE
KANSAS CITY, MO 64105-1310
CERTIFICATE OF AUTHORITY NO. 001270

Bartlett & West
601 MONROE ST., SUITE 201 - JEFFERSON CITY, MO 65101
PHONE: 573-634-2022 FAX: 573-634-2026
CERTIFICATE OF AUTHORITY NO. 000117 - ENGINEERING
WWW.BARTLETTWEST.COM

DRAFT FOR CONSTRUCTABILITY REVIEW – NOT FOR CONSTRUCTION

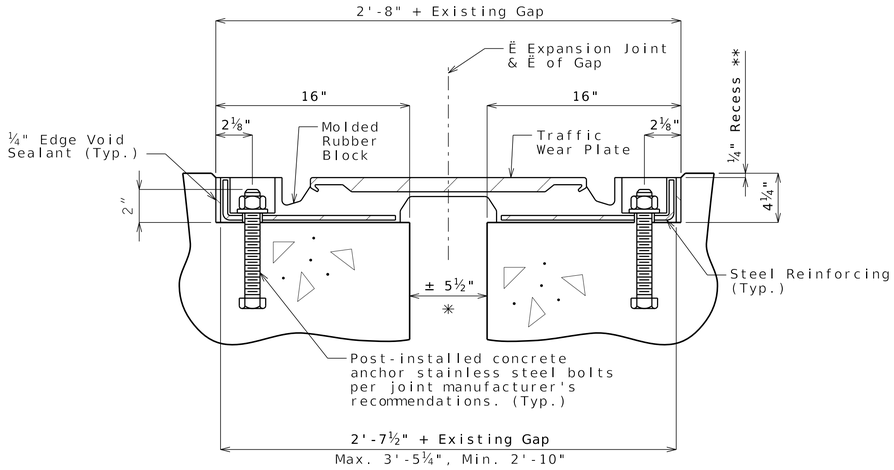

SECTION THRU JOINT

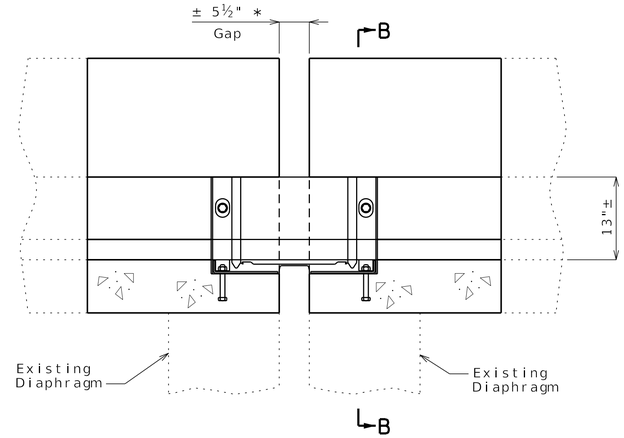

PART ELEVATION OF BARRIER

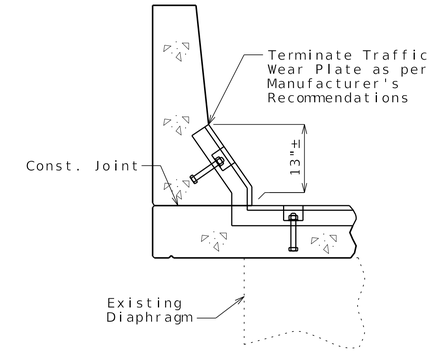

SECTION B-B

* Existing plans provided 9" gap from face to face of concrete diaphragms at 60°F at time of construction. For replacement joint, reconstruct gap to 5 1/2" at 60° F.

** 1/4" recess shall be measured from top of finished overlay.

Notes:

The installation temperature shall be taken as the actual air temperature averaged over the 24-hour period immediately preceding installation.

Replacement expansion joint shall be a WaboFlex Model SR9 as manufactured by Watson Bowman Acme Corp. Amherst New York. The new joint is to be installed per manufacturer's recommendations.

The expansion device shall be fabricated to match the crown of the roadway.

Designed APR 2025
Detailed APR 2025
Checked APR 2025

Note: This drawing is not to scale. Follow dimensions.

SEGMENTAL EXPANSION JOINT SYSTEM AT BENT 7

DATE PREPARED	4/29/2025
ROUTE	I-70
STATE	MO
DISTRICT	BR
SHEET NO.	13
COUNTY	ST. CHARLES
JOB NO.	JST0020
CONTRACT ID.	
PROJECT NO.	
BRIDGE NO.	A54062

DESCRIPTION

DATE

MISSOURI HIGHWAYS AND TRANSPORTATION COMMISSION
105 WEST CAPITOL
JEFFERSON CITY, MO 65102
1-888-ASK-MODOT (1-888-275-6636)

IMPROVE 70 ALLIANCE

HNTB
715 KIRK DRIVE
KANSAS CITY, MO 64105-1310
CERTIFICATE OF AUTHORITY
NO. 001270

Bartlett & West
601 MONROE ST., SUITE 201 - JEFFERSON CITY, MO 65101
PHONE: (573) 634-2448
CERTIFICATE OF AUTHORITY NO. 000167 - ENGINEERING
WWW.BARTLETTWEST.COM

DRAFT FOR CONSTRUCTABILITY REVIEW – NOT FOR CONSTRUCTION

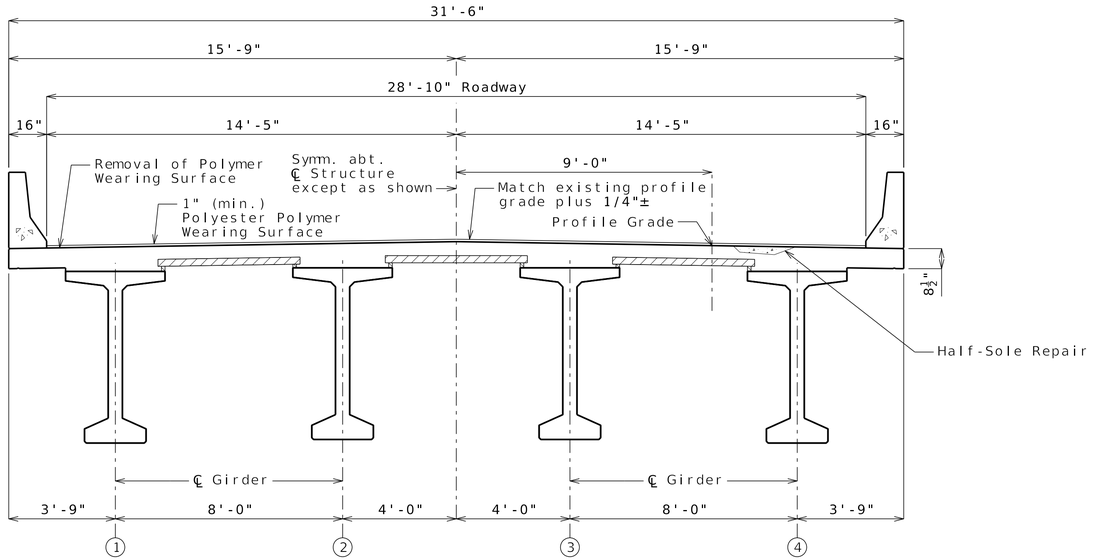

TYPICAL TANGENT SECTION THRU SLAB

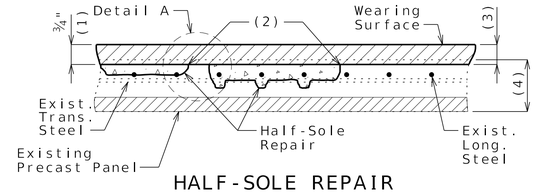

HALF-SOLE REPAIR

Estimated Half-Sole Repairs=600 sq. ft.

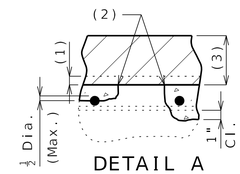

DETAIL A

Clearance around top bar and around bottom bar at the intersection of top bar shall be required when more than half the diameter of the top bar is exposed.

(1) Remove Existing 1/4"± Epoxy Polymer wearing surface Plus 1/2" of existing deck.

(2) 1" vertical side shall be established outside the deteriorated area.

(3) 1" minimum Polyester Polymer wearing surface.

(4) Original depth of deck.

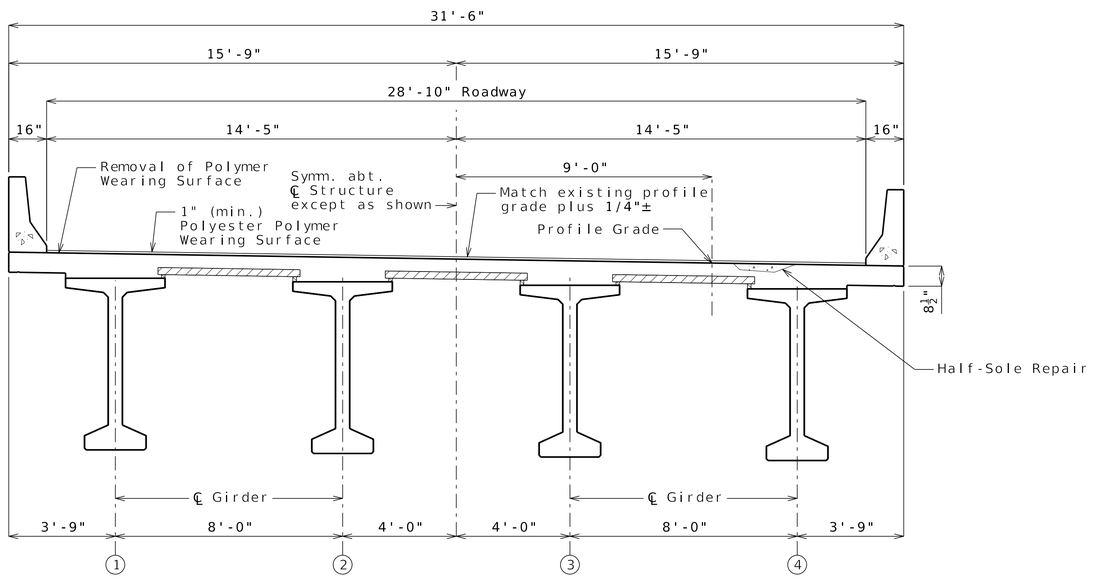

SUPERELEVATION SECTION THRU SLAB

Notes:

Polyester Polymer Concrete may be substituted for Class B-2 Concrete at locations of half-sole repairs. See Job Special Provisions.

Designed APR 2025
Detailed APR 2025
Checked APR 2025

Note: This drawing is not to scale. Follow dimensions.

SLAB REPAIR DETAILS

DATE PREPARED	4/29/2025
ROUTE	I-70
STATE	MO
DISTRICT	BR
SHEET NO.	14
COUNTY	ST. CHARLES
JOB NO.	JST0020
CONTRACT ID.	
PROJECT NO.	
BRIDGE NO.	A54062

DESCRIPTION

DATE

MISSOURI HIGHWAYS AND TRANSPORTATION COMMISSION
105 WEST CAPITOL
JEFFERSON CITY, MO 65102
1-888-ASK-MODOT (1-888-275-6636)

IMPROVE 70 ALLIANCE

HNTB
715 KIRK DRIVE
KANSAS CITY, MO 64105-1310
CERTIFICATE OF AUTHORITY NO. 001270

Bartlett & West
601 MONROE ST., SUITE 201 - JEFFERSON CITY, MO 65101
PHONE: (573) 634-2448 - FAX: (573) 634-5104
CERTIFICATE OF AUTHORITY NO. 000107 - ENGINEERING
WWW.BARTLETTWEST.COM

DRAFT FOR CONSTRUCTABILITY REVIEW – NOT FOR CONSTRUCTION

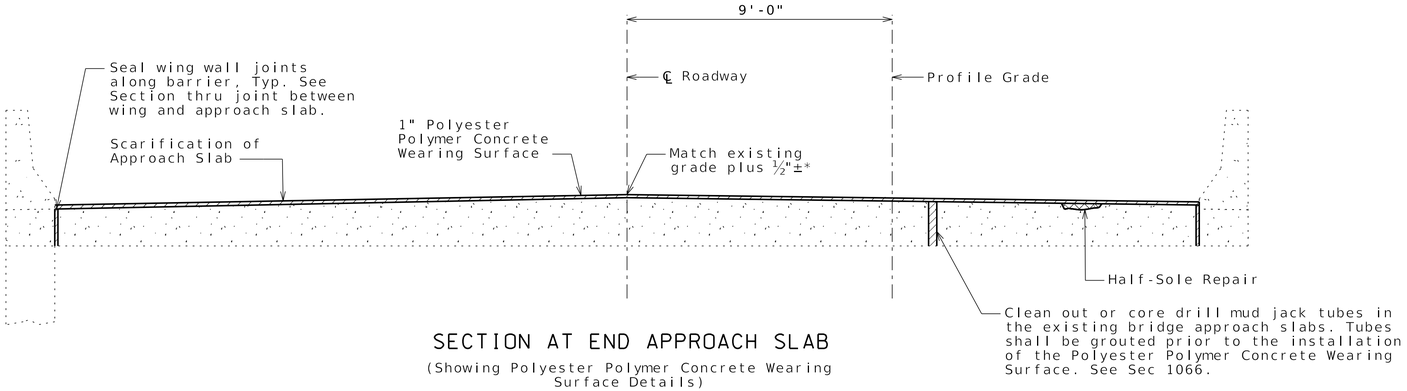

SECTION AT END APPROACH SLAB

(Showing Polyester Polymer Concrete Wearing Surface Details)

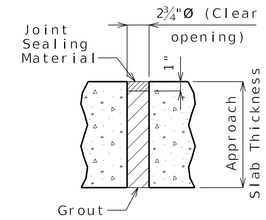

TYPICAL MUD JACK TUBE DETAIL

Note:

Polyester Polymer Concrete may be substituted for Class B-2 concrete at locations of half-sole and full-depth repairs. See Job Special Provisions.

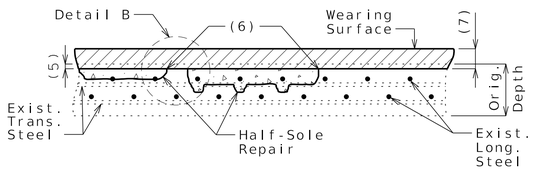

HALF-SOLE REPAIR

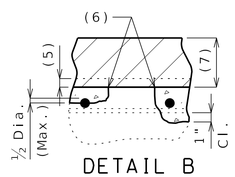

DETAIL B

Clearance around top bar and around bottom bar at the intersection of top bar shall be required when more than half the diameter of the top bar is exposed.

(5) ½" scarification of existing slab *

(6) 1" vertical side shall be established outside the deteriorated area.

(7) 1" minimum PPC wearing surface

* Perform variable depth transition across bridge approach slab to match existing pavement elevation at outer edge of roadway approach pavement. Maintain constant depth of new wearing surface and vary scarificaton and/or hydro demolition. Dimensions shown are at the interface with the bridge end bents.

POLYESTER POLYMER CONCRETE WEARING SURFACE ALTERNATE DETAILS

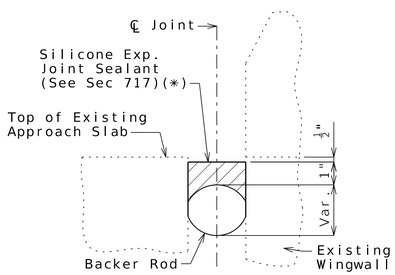

SECTION THRU JOINT BETWEEN WING & APPROACH SLAB

* Seal joint between vertical face of approach slab and wing with "Silicone Joint Sealant for Saw Cut and Formed Joints" in accordance with Sec. 717.

Designed APR 2025
Detailed APR 2025
Checked APR 2025

Note: This drawing is not to scale. Follow dimensions.

BRIDGE APPROACH SLAB REPAIR

DATE PREPARED	4/29/2025
ROUTE	I-70
STATE	MO
DISTRICT	BR
SHEET NO.	15
COUNTY	ST. CHARLES
JOB NO.	JST0020
CONTRACT ID.	
PROJECT NO.	
BRIDGE NO.	A54062

DESCRIPTION

DATE

MISSOURI HIGHWAYS AND TRANSPORTATION COMMISSION
105 WEST CAPITOL
JEFFERSON CITY, MO 65102
1-888-ASK-MODOT (1-888-275-6636)

IMPROVE 70 ALLIANCE

HNTB
715 KIRK DRIVE
KANSAS CITY, MO 64105-1310
CERTIFICATE OF AUTHORITY
NO. 001270

Bartlett & West
601 MONROE ST., SUITE 201 - JEFFERSON CITY, MO 65101
PHONE: 573-634-2448
CERTIFICATE OF AUTHORITY NO. 000157 - ENGINEERING
WWW.BARTLETTWEST.COM

DRAFT FOR CONSTRUCTABILITY REVIEW – NOT FOR CONSTRUCTION

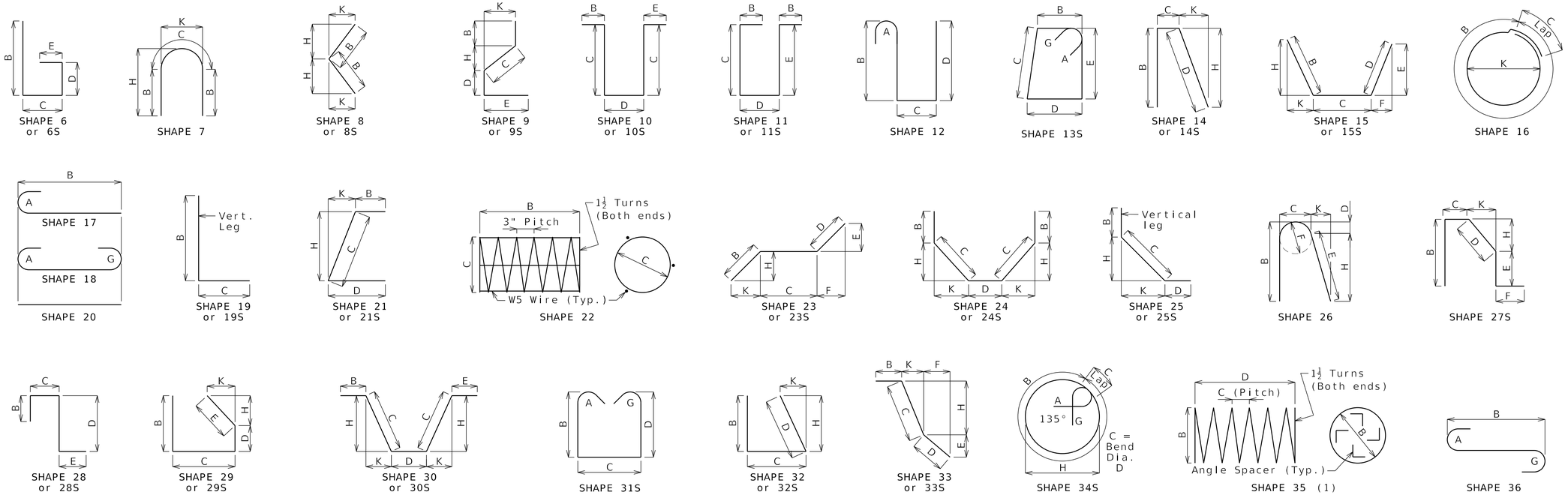

Finished Bend Diameters D and Hook Dimensions

Standard Pin Bend Shapes

Size	Case	D	A or G 90°	A or G 180°	J 180°
#4	1	3"	8"	6"	4"
#5	1	3¾"	10"	7"	5"
#6	1	4½"	12"	8¼"	6"
#7	2	5¼"	14"	9¾"	7"
	3	7"	15"	11½"	8¾"
#8	2	6"	16"	11"	8"
	3	8"	17"	13¼"	10"
#9	1	9½"	19½"	15½"	11¾"
#10	1	10¾"	22"	17½"	13¼"
#11	1	12"	24½"	19½"	14⅞"
#14	1	18¼"	31¼"	27½"	21⅝"
#18	1	24"	41½"	36¼"	28½"

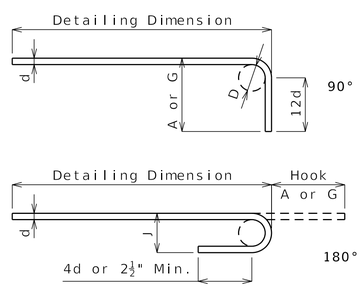

Stirrup Pin Bend Shapes (S)

Size	Case	D	A or G 90°	A or G 135°	A or G 180°	H 135°	J 180°
#4	2	2"	4½"	4½"	5"	2⅞"	3"
	3	3"	5"	5¼"	6"	3"	4"
#5	2	2½"	5¾"	5¾"	5¾"	3⅝"	3¾"
	3	3¾"	6¼"	6½"	7"	3⅞"	5"
#6	1	4½"	12"	7¾"	8¼"	4⅝"	6"

Applicable for all grades of steel.

Case 1 applies to all reinforcement. Case 2 applies to all reinforcement except for galvanized bars. Case 3 applies to galvanized bars only.

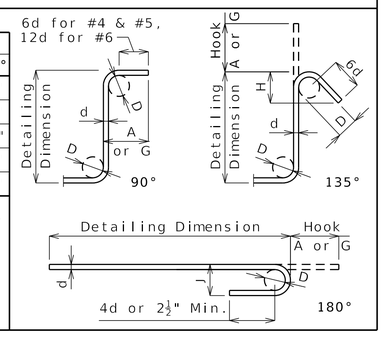

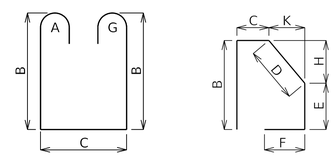

BENDING DIAGRAMS

All dimensions are out to out.

Shapes ending with an S shall be bent in accordance with stirrup pin bend shapes.

Unless otherwise noted, finished bending diameter D is the same for all bends of a shape.

(1) Shall be a deformed or plain spiral bar or wire.

Four angle or channel spacers are required for each column spiral. Spacers are to be placed on inside of spirals. Length and weight of column spirals do not include splices or spacers.

Reinforcing Steel Totals (Pounds)

	Size	Substructure Plain	Substructure Epoxy	Superstructure Slab Plain	Superstructure Slab Epoxy	Superstructure Barrier	Superstructure Slip Form	Entire Bridge Plain	Entire Bridge Epoxy
By Size	W5	0	0	0	0	0	0	0	0
	4	0	0	0	243	69	0	0	312
	5	0	0	0	90	670	0	0	760
	6	0	0	0	1298	0	0	0	1298
	7	0	0	0	0	0	0	0	0
	8	0	0	0	0	0	0	0	0
	9	0	0	0	0	0	0	0	0
	10	0	0	0	0	0	0	0	0
	11	0	0	0	0	0	0	0	0
	14	0	0	0	0	0	0	0	0
	18	0	0	0	0	0	0	0	0
By Type		0	0	0	1631	739	0	0	2370

All superstructure reinforcing steel shall be epoxy coated unless otherwise specified.

DATE PREPARED	4/29/2025
ROUTE	I-70
STATE	MO
DISTRICT	BR
SHEET NO.	16
COUNTY	ST. CHARLES
JOB NO.	JST0020
CONTRACT ID.	
PROJECT NO.	
BRIDGE NO.	A54062

DESCRIPTION

DATE

MISSOURI HIGHWAYS AND TRANSPORTATION COMMISSION

105 WEST CAPITOL
JEFFERSON CITY, MO 65102
1-888-ASK-MODOT (1-888-275-6636)

IMPROVE 70 ALLIANCE

HNTB
715 KIRK DRIVE
KANSAS CITY, MO 64105-1310
CERTIFICATE OF AUTHORITY NO. 001270

Bartlett & West
601 MONROE ST., SUITE 201 - JEFFERSON CITY, MO 65101
(573) 634-2022 - FAX (573) 634-8189
CERTIFICATE OF AUTHORITY NO. 000197 - ENGINEERING
WWW.BARTLETTWEST.COM

Detailed APR 2025
Checked APR 2025

Note: This drawing is not to scale. Follow dimensions.

BAR BENDING DIAGRAMS

DRAFT FOR CONSTRUCTABILITY REVIEW – NOT FOR CONSTRUCTION

Bill of Reinforcing Steel

No. Req.	Size/ Mark	Location	Codes C	Codes SH	Codes V	Dimensions B ft in.	C ft in.	D ft in.	E ft in.	F ft in.	H ft in.	K ft in.	Nom. Length ft in.	Actual Length ft in.	Weight lb
16	5 K1	BARRIER	E	19S		3 1.000	5.125						3 6	3 5	57
16	5 K2	BARRIER	E	14S		5.125	19.125	18.000			2.000	17.875	3 6	3 5	57
16	5 K3	BARRIER	E	27S		2 4.000	5.125	12.250	18.000		10.000	7.000	5 3	5 1	85
28	5 R1	BARRIER	E	19S		2 6.000	3.500						2 10	2 8	78
28	5 R2	BARRIER	E	15S		2 6.250	3.500				2 6.125	3.000	2 10	2 9	80
28	5 R3	BARRIER	E	19S		17.000	6.000						1 11	1 10	54
28	5 R4	BARRIER	E	27S			6.000	11.125	7.000	12.000	9.125	6.375	3 0	2 10	83
14	5 R24	BARRIER	E	20		2 10.000							2 10	2 10	41
28	5 R29	BARRIER	E	20		2 3.000							2 3	2 3	66
14	5 R31	BARRIER	E	20		4 9.000							4 9	4 9	69
22	4 K10	BARRIER	E	20		22.000							1 10	1 10	27
22	4 K13	BARRIER	E	20		2 10.000							2 10	2 10	42
4	6 H1	END BENT 1	E	23		14.000	40 9.000	14.000	9.875	9.875	9.875	9.875	43 1	43 0	258
52	5 H7	BENT 7	E	20		19.750							1 8	1 8	90
8	6 H12	END BENT 12	E	23		14.000	38 9.000				12.875	5.500	39 11	39 8	477
3	4 S1	END BENT 1	E	23		14.000	40 9.000	14.000	9.875	9.875	9.875	9.875	43 1	43 0	86
12	6 S7	BENT 7	E	20		31 3.000							31 3	31 3	563
6	4 S12	END BENT 12	E	23		14.000	38 2.000				12.875	5.500	39 4	39 2	157

Bill of Reinforcing Steel

No. Req.	Size/ Mark	Location	Codes C	Codes SH	Codes V	Dimensions B ft in.	C ft in.	D ft in.	E ft in.	F ft in.	H ft in.	K ft in.	Nom. Length ft in.	Actual Length ft in.	Weight lb

Nominal lengths are based on out to out dimensions shown in bending diagrams and are listed to the nearest inch for fabricator's use. Actual lengths are measured along centerline bar to the nearest inch. Weights are based on actual lengths.

For bending diagrams and steel reinforcing totals, see Sheet No. _.

Codes: C = Required coatings, where E = Epoxy Coated and G = Galvanized.
SH = Required shape, see bending diagrams.
V = Sets of varied bars and number of bars of each length. Bar dimensions vary in equal increments between dimensions shown on this line and the following line and the actual length dimension shown on this line and the following line vary by the specified increment.

All bars shall be Grade 60.

Detailed APR 2025
Checked APR 2025

Note: This drawing is not to scale. Follow dimensions.

Sheet 17 of 17

BILL OF REINFORCING STEEL (1 OF1)

DATE PREPARED 4/29/2025
ROUTE I-70 | STATE MO
DISTRICT BR | SHEET NO. 17
COUNTY ST. CHARLES
JOB NO. JST0020
CONTRACT ID.
PROJECT NO.
BRIDGE NO. A54062

DESCRIPTION | DATE

MISSOURI HIGHWAYS AND TRANSPORTATION COMMISSION
105 WEST CAPITOL
JEFFERSON CITY, MO 65102
1-888-ASK-MODOT (1-888-275-6636)

IMPROVE 70 ALLIANCE

HNTB
715 KIRK DRIVE
KANSAS CITY, MO 64105-1310
CERTIFICATE OF AUTHORITY
NO. 001270

Bartlett & West
601 MONROE ST. SUITE 201, JEFFERSON CITY, MO 65101
PHONE: 573-634-2448 FAX: 573-634-5881
CERTIFICATE OF AUTHORITY NO. 000107 - ENGINEERING
WWW.BARTLETTWEST.COM