DATE REVISED	DATE REVISED	FED.RD. DIST.NO.	STATE	JOB NO.	SHEET NO.	TOTAL SHEETS
		6	ARK.	061741	1	136
		I-30 STR. & APPRS. (HWY. 283) (S)				

ARKANSAS DEPARTMENT OF TRANSPORTATION
CONSTRUCTION PLANS FOR STATE HIGHWAY

I-30 STR. & APPRS.

(HWY. 283) (S)

HOT SPRING COUNTY

ROUTE 283 SECTION 3

JOB 061741

FED. AID PROJ. NHPP-0030(33)

NOT TO SCALE

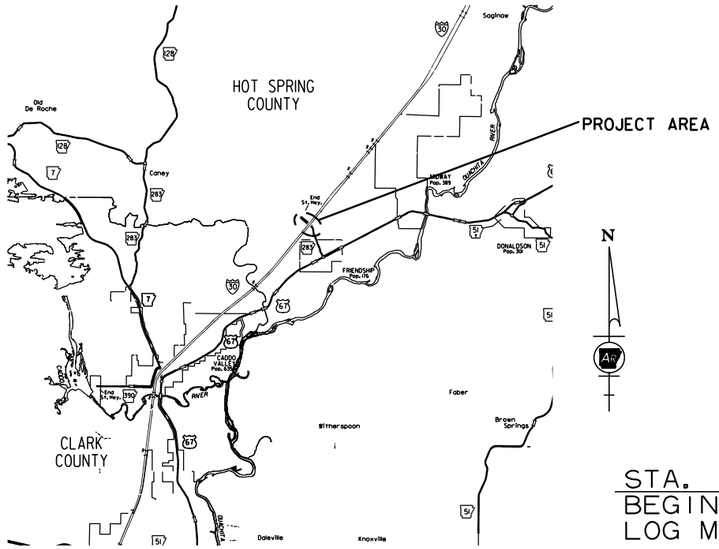

VICINITY MAP

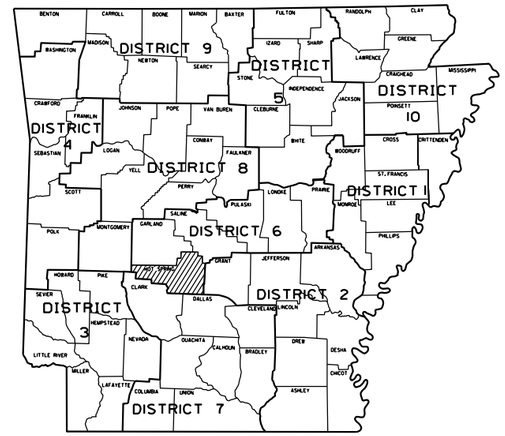

ARK. HWY. DIST. NO. 6

STA. 102+00.00
BEGIN JOB 061741
LOG MILE 0.09

STA. 116+39.26
END JOB 061741

R 20 W | R 19 W

R 19 W | R 18 W

T 5 S

T 6 S

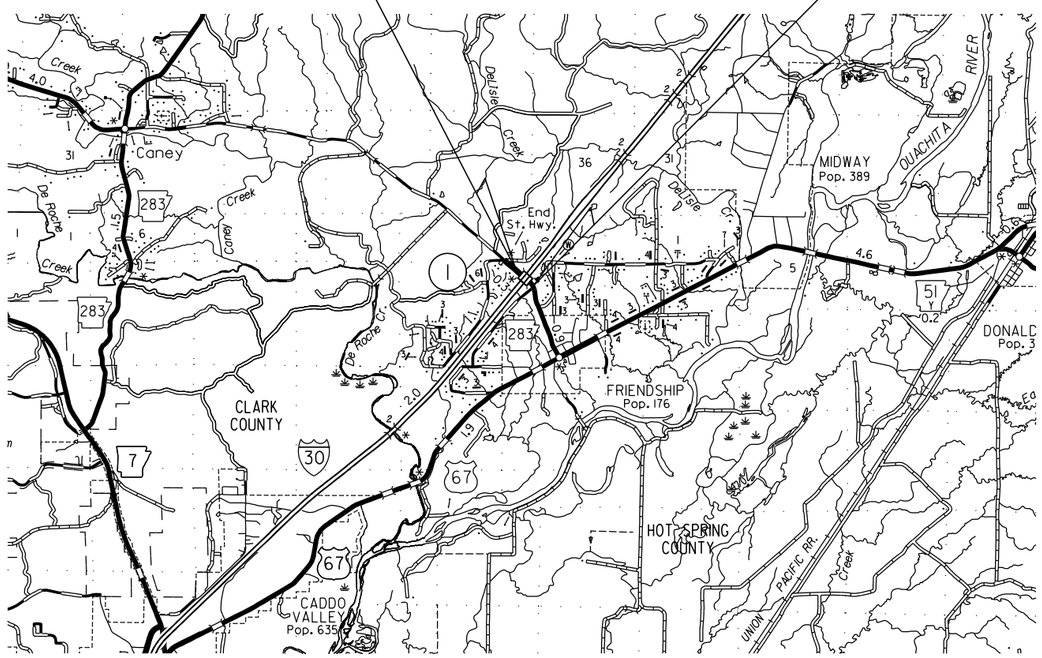

BRIDGE INFORMATION

(1)
STA. 110+66.22 BR. END
240'-0" CONTINUOUS PLATE GIRDER UNIT
(120'-120')
242'-2" TOTAL LENGTH
34'-0" CLEAR ROADWAY
2° 37' RT. FORWARD SKEW
BR. NO. 07680
STA. 113+08.39 BR. END

DESIGN TRAFFIC DATA

DESIGN YEAR	2024
2024 ADT	2,800
2044 ADT	3,300
2044 DHV	363
DIRECTIONAL DISTRIBUTION	0.60
TRUCKS	6%
DESIGN SPEED	40 MPH

	BEGIN PROJECT	MID-POINT OF PROJECT	END PROJECT
LATITUDE	N 34°14' 13"	N 34°14' 08"	N 34°14' 03"
LONGITUDE	W 93°00' 36"	W 93°00' 30"	W 93°00' 24"

LENGTH OF PROJECT CALCULATED ALONG C.L.

GROSS LENGTH OF PROJECT	1439.26	FEET	OR	0.273	MILES
NET . . ROADWAY	1197.09	.		0.227	MILES
NET . . BRIDGES	242.17	.		0.046	MILES
NET . . PROJECT	1439.26	.		0.273	MILES

CERTIFICATE OF AUTHORIZATION
BURNS & McDONNELL ENGINEERING COMPANY, INC.
No.17
ARKANSAS-ENGINEER

STATE OF ARKANSAS
REGISTERED PROFESSIONAL ENGINEER
No. 13832
RYAN W. CASTOR
05-02-2024

5/2/2024
2:40:31 PM
...\Road_Sheets\MSYr06174L_Title

DATE REVISED	DATE REVISED	FED.RD. DIST.NO.	STATE	JOB NO.	SHEET NO.	TOTAL SHEETS
		6	ARK.	061741	2	136
		INDEX OF SHEETS AND STANDARD DRAWINGS				

STATE OF ARKANSAS
REGISTERED PROFESSIONAL ENGINEER
No. 13832
RYAN W. CASTOR
05-02-2024

INDEX OF SHEETS

NOTE: CROSS SECTIONS NOT NORMALLY INCLUDED IN PLANS SOLD TO PROSPECTIVE BIDDERS, BUT MAY BE HAD UPON REQUEST.

BRIDGE STANDARD DRAWINGS

DRWG.NO.	TITLE	DATE
55000	STANDARD DETAILS FOR EMBANKMENT CONSTRUCTION AND BACKFILL AT BRIDGE ENDS	02-27-14
55001	STANDARD DETAILS FOR DUMPED RIPRAP AND FILTER BLANKET AND COMPUTING EXCAVATION FOR STRUCTURES	02-27-14
55002	STANDARD DETAILS FOR CONCRETE RIPRAP	02-27-14
55005	STANDARD DETAILS FOR PERMANENT STEEL BRIDGE DECK FORMS FOR STEEL & CONCRETE GIRDER SPANS	03-24-16
55006	STANDARD GENERAL NOTES FOR STEEL BRIDGE STRUCTURES	09-02-15
55007	STANDARD DETAILS FOR STEEL BRIDGE STRUCTURES	02-11-16
55008	STANDARD DETAILS FOR POURED SILICONE JOINTS	02-11-16
55010	STANDARD DETAILS FOR TYPE D BRIDGE NAME PLATE	04-14-23
55030F	STANDARD DETAILS FOR TYPE F APPROACH GUTTERS	09-07-23
55040F1	STANDARD DETAILS FOR TYPE F APPROACH SLAB	09-07-23
55070	STANDARD DETAILS FOR BRIDGE TRAFFIC RAIL TYPE SSTR36	09-27-22

ROADWAY STANDARD DRAWINGS

DRWG.NO.	TITLE	DATE
CDP-1	CONCRETE DITCH PAVING	12-08-16
CPTJ-6A	TRANSVERSE & LONGITUDINAL JOINTS FOR CONCRETE PAVEMENT (NON-REINFORCED)	11-07-19
DR-1	DETAILS OF DRIVEWAYS & ISLANDS	05-19-22
DR-2	DETAILS OF DRIVEWAYS & STREET TURNOUTS	05-19-22
GR-5	GUARDRAIL DETAILS (TYPE C) STREET/ROAD BARRICADE OR TEMPORARY INSTALLLATION	11-07-19
GR-6	GUARDRAIL DETAILS	05-19-22
GR-8	GUARDRAIL DETAILS	11-07-19
GR-9	GUARDRAIL DETAILS	11-07-19
GR-10	GUARDRAIL DETAILS	11-07-19
GR-11	GUARDRAIL DETAILS	11-07-19
GR-12	GUARDRAIL DETAILS	05-14-20
GRT-1	GUARD RAIL DETAILS	11-07-19
MB-1	MAILBOX DETAILS	11-18-04
PCC-1	CONCRETE PIPE CULVERT FILL HEIGHTS & BEDDING	02-27-14
PCM-1	METAL PIPE CULVERT FILL HEIGHTS & BEDDING	02-27-14
PM-1	PAVEMENT MARKING DETAILS	02-27-20
SE-2	TABLES AND METHOD OF SUPERELEVATION FOR TWO-WAY TRAFFIC	11-07-19
SHS-8	TYPICAL DELINEATOR PLACEMENT ALONG THE INTERSTATE SYSTEM	11-16-17
TC-1	STANDARD TRAFFIC CONTROLS FOR HIGHWAY CONSTRUCTION	11-07-19
TC-2	STANDARD TRAFFIC CONTROLS FOR HIGHWAY CONSTRUCTION	05-20-21
TC-3	STANDARD TRAFFIC CONTROLS FOR HIGHWAY CONSTRUCTION	08-12-21
TC-4	STANDARD TRAFFIC CONTROLS FOR HIGHWAY CONSTRUCTION-TEMPORARY PRECAST BARRIER	11-07-19
TC-5	STANDARD TRAFFIC CONTROLS FOR HIGHWAY CONSTRUCTION-TEMPORARY PRECAST BARRIER	11-07-19
TEC-1	TEMPORARY EROSION CONTROL DEVICES	11-16-17
TEC-3	TEMPORARY EROSION CONTROL DEVICES	11-03-94
WF-4	WIRE FENCE TYPE C AND D	08-22-02

5/2/2024
2:40:25 PM
...\Road_Sheets\MS\r061741_IN01

STATE OF ARKANSAS
REGISTERED PROFESSIONAL ENGINEER
No. 13832
RYAN W. CASTOR
08-01-2024

GOVERNING SPECIFICATIONS

ARKANSAS STATE HIGHWAY COMMISSION STANDARD SPECIFICATIONS FOR HIGHWAY CONSTRUCTION, EDITION OF 2014, AND THE FOLLOWING SPECIAL PROVISIONS AND SUPPLEMENTAL SPECIFICATIONS:

NUMBER	TITLE
ERRATA_____	ERRATA FOR THE BOOK OF STANDARD SPECIFICATIONS
FHWA-1273___	REQUIRED CONTRACT PROVISIONS FEDERAL-AID CONSTRUCTION CONTRACTS
FHWA-1273___	SUPPLEMENT - EQUAL EMPLOYMENT OPPORTUNITY - NOTICE TO CONTRACTORS
FHWA-1273___	SUPPLEMENT - SPECIFIC EQUAL EMPLOYMENT OPPORTUNITY RESPONSIBILITIES (23 U.S.C. 140)
FHWA-1273___	SUPPLEMENT - EQUAL EMPLOYMENT OPPORTUNITY - GOALS AND TIMETABLES
FHWA-1273___	SUPPLEMENT - EQUAL EMPLOYMENT OPPORTUNITY - FEDERAL STANDARDS
FHWA-1273___	SUPPLEMENT - TRAINING PROGRAM - JOB 061741
FHWA-1273___	SUPPLEMENT - POSTERS AND NOTICES REQUIRED FOR FEDERAL-AID PROJECTS
FHWA-1273___	SUPPLEMENT - WAGE RATE DETERMINATION
100-3_____	CONTRACTOR'S LICENSE
100-4_____	DEPARTMENT NAME CHANGE
102-2_____	ISSUANCE OF PROPOSALS
102-3_____	PREQUALIFICATION OF BIDDERS
103-2_____	CONTACT INFROMATION FOR MOTORIST DAMAGE CLAIMS
105-4_____	MAINTENANCE DURING CONSTRUCTION
107-2_____	RESTRAINING CONDITIONS
108-1_____	LIQUIDATED DAMAGES
108-2_____	WORK ALLOWED PRIOR TO ISSUANCE OF WORK ORDER
110-1_____	PROTECTION OF WATER QUALITY AND WETLANDS
210-1_____	UNCLASSIFIED EXCAVATION
303-1_____	AGGREGATE BASE COURSE
306-1_____	QUALITY CONTROL AND ACCEPTANCE
307-1_____	CEMENT
308-1_____	CEMENT
400-1_____	TACK COATS
400-4_____	DESIGN AND QUALITY CONTROL OF ASPHALT MIXTURES
400-5_____	PERCENT AIR VOIDS FOR ACHM MIX DESIGNS
400-6_____	LIQUID ANTI-STRIP ADDITIVE
400-7_____	TRACKLESS TACK
404-3_____	DESIGN OF ASPHALT MIXTURES
409-2_____	ASPHALT LABORATORY FACILITY
410-1_____	CONSTRUCTION REQUIREMENTS AND ACCEPTANCE OF ASPHALT CONCRETE PLANT MIX COURSES
410-2_____	DEVICES FOR MEASURING DENSITY FOR ROLLING PATTERNS
410-4_____	EVALUATION OF ACHM SUBLOT REPLACEMENT MATERIAL
416-1_____	RECYCLED ASPHALT PAVEMENT
501-2_____	CEMENT
600-2_____	INCIDENTAL CONSTRUCTION
603-1_____	LANE CLOSURE NOTIFICATION
604-1_____	RETROREFLECTIVE SHEETING FOR TRAFFIC CONTROL DEVICES IN CONSTRUCTION ZONES
604-3_____	TRAFFIC CONTROL DEVICES IN CONSTRUCTION ZONES (MASH)
605-1_____	CONCRETE DITCH PAVING
606-1_____	PIPE CULVERTS FOR SIDE DRAINS
617-1_____	GUARDRAIL TERMINAL (TYPE 2)
617-2_____	GUARDRAIL DELINEATORS
619-1_____	FENCES
620-1_____	MULCH COVER
632-1_____	CONCRETE ISLAND
637-1_____	MAILBOXES
700-2_____	TRAFFIC CONTROL FACILITIES
800-1_____	STRUCTURES
802-3_____	CONCRETE FOR STRUCTURES
802-4_____	CEMENT
804-2_____	REINFORCING STEEL FOR STRUCTURES
807-2_____	STEEL STRUCTURES
808-1_____	INSTALLATION OF ELASTOMERIC BEARINGS
808-2_____	ELASTOMERIC BEARINGS
JOB 061741___	ARCHITECTURAL FINISH
JOB 061741___	ASSESSMENT OF WORKING DAYS – MAINTENANCE OF TRAFFIC
JOB 061741___	BIDDING REQUIREMENTS AND CONDITIONS
JOB 061741___	BROADBAND INTERNET SERVICE FOR ASPHALT CONCRETE PLANT
JOB 061741___	BROADBAND INTERNET SERVICE FOR FIELD OFFICE
JOB 061741___	BUY AMERICA - CONSTRUCTION MATERIALS
JOB 061741___	CARGO PREFERENCE ACT REQUIREMENTS
JOB 061741___	CLASS C FLY ASH IN PORTLAND CEMENT CONCRETE PAVEMENT AND CLASS S(AE) CONCRETE
JOB 061741___	COLD MILLING – COUNTY PROPERTY
JOB 061741___	CONCRETE BRIDGE DECK CURING AND SURFACE TREATMENT RESTRICTIONS
JOB 061741___	COORDINATION OF WORK
JOB 061741___	CULVERT CLEAN OUT
JOB 061741___	DESIGN AND QUALITY CONTROL ASPHALT MIXTURES
JOB 061741___	DIRECT TENSION INDICATORS FOR HIGH STRENGTH BOLT ASSEMBLIES
JOB 061741___	DISADVANTAGED BUSINESS ENTERPRISE BIDDER'S RESPONSIBILITIES
JOB 061741___	DRILLED SHAFT FOUNDATIONS
JOB 061741___	ENHANCED THERMOPLASTIC PAVEMENT MARKING
JOB 061741___	GOALS FOR DISADVANTAGED BUSINESS ENTERPRISE PARTICIPATION
JOB 061741___	LIQUIDATED DAMAGES PROCEDURE FOR BID LETTINGS
JOB 061741___	LONGITUDINAL JOINT DENSITIES FOR ACHM SURFACE COURSES
JOB 061741___	MAINTENANCE OF TRAFFIC
JOB 061741___	MANDATORY ELECTRONIC CONTRACT
JOB 061741___	MANDATORY ELECTRONIC DOCUMENT SUBMITTAL
JOB 061741___	MOBILE SPEED NOTIFICATION SYSTEM (SPECIAL)
JOB 061741___	NESTING SITES OF MIGRATORY BIRDS
JOB 061741___	NONDESTRUCTIVE TESTING OF DRILLED SHAFTS
JOB 061741___	OFF-SITE RESTRAINING CONDITIONS FOR INDIANA AND NORTHERN LONG-EARED BATS
JOB 061741___	PARTNERING REQUIREMENTS
JOB 061741___	PERCENT AIR VOIDS AND NDESIGN FOR ACHM SURFACE MIX DESIGNS
JOB 061741___	PRICE ADJUSTMENT FOR ASPHALT BINDER
JOB 061741___	PRICE ADJUSTMENT FOR FUEL
JOB 061741___	PROHIBITION OF CERTAIN TELECOMMUNICATIONS AND VIDEO SURVEILLANCE SERVICES OR EQUIPMENT
JOB 061741___	REACTIVE AGGREGATE TESTING
JOB 061741___	REMOVAL AND DISPOSAL OF WIRE ROPE SAFETY FENCE
JOB 061741___	SEQUENCE OF CONSTRUCTION - ALTERNATIVE CONCEPTUAL PROPOSAL (ACP)
JOB 061741___	SPECIAL SAFETY REQUIREMENTS FOR BRIDGES
JOB 061741___	STORM WATER POLLUTION PREVENTION PLAN
JOB 061741___	SUBMISSION OF ASPHALT CONCRETE HOT MIX ACCEPTANCE TEST RESULTS
JOB 061741___	TEXTURED COATING FINISH
JOB 061741___	TRAFFIC CONTROL DEVICES IN CONSTRUCTION ZONES
JOB 061741___	UTILITY ADJUSTMENTS
JOB 061741___	VALUE ENGINEERING
JOB 061741___	WARM MIX ASPHALT
JOB 061741___	WIRE ROPE SAFTEY FENCE (POST REPAIR)
JOB 061741___	WIRE ROPE SAFETY FENCE (WRSF) - REMOVE AND RECONSTRUCT

GENERAL NOTES

1. GRADE LINE DENOTES FINISHED GRADE WHERE SHOWN ON PLANS.
2. ALL PIPE LINES, POWER, TELEPHONE, AND TELEGRAPH LINES TO BE MOVED OR LOWERED BY THE RESPECTIVE OWNERS AS PER AGREEMENT WITH SUCH OWNERS.
3. ANY EQUIPMENT OR APPURTENANCE THAT INTERFERES WITH THE PROPOSED CONSTRUCTION AND WHICH MAY BE THE PROPERTY OF UTILITY SERVICE ORGANIZATIONS SHALL BE MOVED BY THE OWNERS UNLESS OTHERWISE PROVIDED.
4. THE CONTRACTOR SHALL BE RESPONSIBLE FOR MAINTAINING U. S. MAILBOXES WITHIN THE PROJECT LIMITS IN SUCH A MANNER THAT THE PUBLIC MAY RECEIVE CONTINUED MAIL SERVICE. PAYMENT WILL BE CONSIDERED INCLUDED IN THE PRICE BID FOR THE VARIOUS BID ITEMS.
5. ALL LAND MONUMENTS LOCATED WITHIN THE CONSTRUCTION AREA SHALL BE PROTECTED IN ACCORDANCE WITH SECTION 107.12 OF THE STANDARD SPECIFICATIONS.
6. ALL TREES THAT DO NOT DIRECTLY INTERFERE WITH THE PROPOSED CONSTRUCTION SHALL BE SPARED AS DIRECTED BY THE ENGINEER. CARE AND DISCRETION SHALL BE USED TO ENSURE THAT ALL TREES NOT TO BE REMOVED SHALL BE HARMED AS LITTLE AS POSSIBLE DURING THE CONSTRUCTION OPERATIONS.
7. THE CONTRACTOR SHALL BE RESPONSIBLE FOR PROVIDING A FENCE TO CONTROL LIVESTOCK IN AREAS WHERE PASTURES ARE SEVERED. WIRE FENCE MAY BE CONSTRUCTED INITIALLY, OR IN LIEU THEREOF, THE CONTRACTOR AT HIS OWN EXPENSE, MAY ELECT TO PROVIDE TEMPORARY FENCING SUITABLE TO CONTAIN LIVESTOCK.
8. THE SEQUENCE AS SHOWN ON THE MAINTENANCE OF TRAFFIC PLANS IS A GENERAL OUTLINE FOR THE CONSTRUCTION OF THIS PROJECT, AND IN NO WAY IS IT INTENDED TO COVER EVERY ITEM IN THE PROJECT. ITEMS NOT CRITICAL TO THE CONSTRUCTION SEQUENCE MAY BE CONSTRUCTED IN ANY STAGE AS APPROVED BY THE RESIDENT ENGINEER.
9. ALL FLEXIBLE BASE AND ASPHALTIC PAVEMENTS REMOVED SHALL BE PAID FOR UNDER THE ITEM NO. 210 - UNCLASSIFIED EXCAVATION.
10. THE EXISTING ASPHALT PAVEMENT TO BE REMOVED FROM THE REMAINING PAVEMENT SHALL BE SEPARATED BY SAWING ALONG A NEAT LINE. AFTER SAWING, THE PAVEMENT TO BE REMOVED SHALL BE CAREFULLY REMOVED IN A MANNER THAT WILL NOT DAMAGE THE PAVEMENT THAT IS TO REMAIN. ANY DAMAGE OF THE ASPHALT PAVEMENT THAT IS TO REMAIN IN PLACE SHALL BE REPAIRED AT THE CONTRACTOR'S EXPENSE.
11. THIS PROJECT IS COVERED UNDER A SECTION 404 NATIONWIDE 14 PERMIT. REFER TO SECTION 110 OF THE STANDARD SPECIFICATIONS, EDITION OF 2014, FOR PERMIT REQUIREMENTS.

DATE REVISED	DATE REVISED	FED.RD. DIST.NO.	STATE	JOB NO.	SHEET NO.	TOTAL SHEETS
		6	ARK.	061741	4	136
		TYPICAL SECTIONS OF IMPROVEMENT				

STATE OF ARKANSAS
REGISTERED PROFESSIONAL ENGINEER
No. 13832
RYAN W. CASTOR
05-02-2024

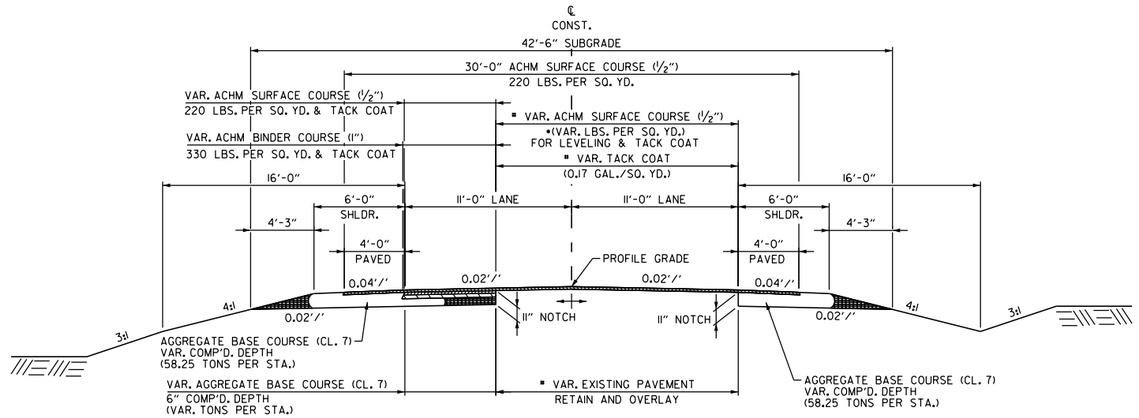

HWY. 283 - NOTCH & OVERLAY SECTION
STA. 102+00.00 TO STA. 107+02.64

•NOTE: TO BE USED IF AND WHERE DIRECTED BY THE ENGINEER

▪ VARIES FROM 22' TO 0' FROM STA. 102+00.00 TO STA. 107+02.64

NOTES:

REFER TO CROSS SECTIONS FOR DEVIATION FROM THE NORMAL SLOPES. NO CHANGES SHALL BE MADE FROM THE PLANNED SLOPES WITHOUT THE APPROVAL OF THE ENGINEER.

THE THICKNESS OF AGGREGATE BASE COURSE SHALL BE WITHIN PLUS OR MINUS ONE INCH OF THE PLAN THICKNESS SHOWN. THE CONTRACTOR WILL CORRECT ANY DEFICIENT THICKNESS THAT DOES NOT MEET TOLERANCE INDICATED. PAYMENT WILL NOT BE MADE FOR MATERIAL PLACED IN EXCESS OF THE TOLERANCE INDICATED.

ASPHALT FOR LEVELING OF EXISTING PAVEMENT SHALL BE PLACED ONLY IF AND WHERE DIRECTED BY THE ENGINEER. CALCULATIONS FOR THE AMOUNT OF LEVELING AND LEVELING OPERATIONS SHALL BE PERFORMED BEFORE CONSTRUCTING NOTCH AND WIDENING. CALCULATIONS WILL NOT BE PAID FOR DIRECTLY BUT PAYMENT WILL BE CONSIDERED INCLUDED IN THE VARIOUS PAY ITEMS.

THE FINAL 2" OF SURFACE COURSE IS TO BE PLACED AFTER ALL OTHER COURSES HAVE BEEN LAID. LONGITUDINAL JOINTS SHALL BE AT LANE LINES.

PRIOR TO AND DURING PLACEMENT OF PAVEMENT AT THE NOTCH, THE CONTRACTOR SHALL PROVIDE POSITIVE DRAINAGE AT ALL TIMES. THE METHOD(S) AND SPACING USED SHALL BE APPROVED BY THE ENGINEER. PAYMENT FOR THIS WORK SHALL BE CONSIDERED IN THE PRICE BID FOR THE VARIOUS CONTRACT ITEMS.

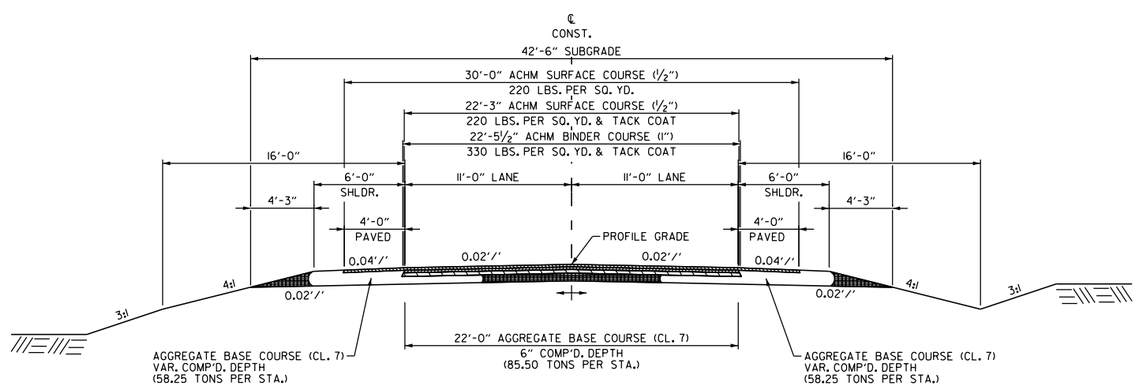

HWY. 283 - FULL DEPTH SECTION
STA. 107+02.64 TO STA. 108+62.43

5/2/2024
2:40:22 PM
...\CADD\Road.Sheets\TS\r061741_TS

TYPICAL SECTIONS OF IMPROVEMENT

DATE REVISED	DATE REVISED	FED.RD. DIST.NO.	STATE	JOB NO.	SHEET NO.	TOTAL SHEETS
		6	ARK.	061741	5	136
		TYPICAL SECTIONS OF IMPROVEMENT				

STATE OF ARKANSAS
REGISTERED PROFESSIONAL ENGINEER
No. 13832
RYAN W. CASTOR
05-02-2024

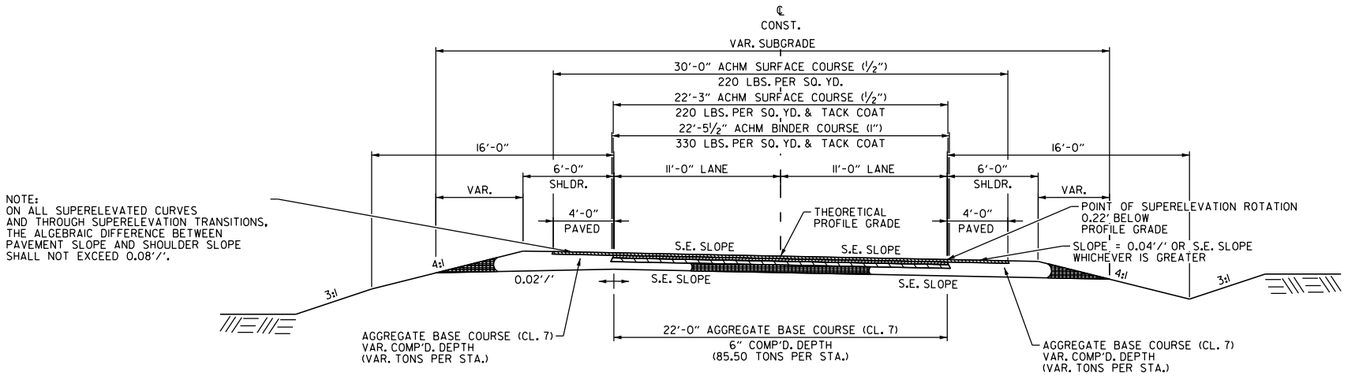

HWY. 283 - FULL DEPTH SECTION
SUPERELEVATION
STA. 108+62.43 TO STA. 110+31.22
STA. 113+43.39 TO STA. 114+28.96

SEE BRIDGE PLANS FOR STA. 110+31.22 - STA. 113+43.39

NOTES:

REFER TO CROSS SECTIONS FOR DEVIATION FROM THE NORMAL SLOPES. NO CHANGES SHALL BE MADE FROM THE PLANNED SLOPES WITHOUT THE APPROVAL OF THE ENGINEER.

THE THICKNESS OF AGGREGATE BASE COURSE SHALL BE WITHIN PLUS OR MINUS ONE INCH OF THE PLAN THICKNESS SHOWN. THE CONTRACTOR WILL CORRECT ANY DEFICIENT THICKNESS THAT DOES NOT MEET TOLERANCE INDICATED. PAYMENT WILL NOT BE MADE FOR MATERIAL PLACED IN EXCESS OF THE TOLERANCE INDICATED.

ASPHALT FOR LEVELING OF EXISTING PAVEMENT SHALL BE PLACED ONLY IF AND WHERE DIRECTED BY THE ENGINEER. CALCULATIONS FOR THE AMOUNT OF LEVELING AND LEVELING OPERATIONS SHALL BE PERFORMED BEFORE CONSTRUCTING NOTCH AND WIDENING. CALCULATIONS WILL NOT BE PAID FOR DIRECTLY BUT PAYMENT WILL BE CONSIDERED INCLUDED IN THE VARIOUS PAY ITEMS.

THE FINAL 2" OF SURFACE COURSE IS TO BE PLACED AFTER ALL OTHER COURSES HAVE BEEN LAID. LONGITUDINAL JOINTS SHALL BE AT LANE LINES.

PRIOR TO AND DURING PLACEMENT OF PAVEMENT AT THE NOTCH, THE CONTRACTOR SHALL PROVIDE POSITIVE DRAINAGE AT ALL TIMES. THE METHOD(S) AND SPACING USED SHALL BE APPROVED BY THE ENGINEER. PAYMENT FOR THIS WORK SHALL BE CONSIDERED IN THE PRICE BID FOR THE VARIOUS CONTRACT ITEMS.

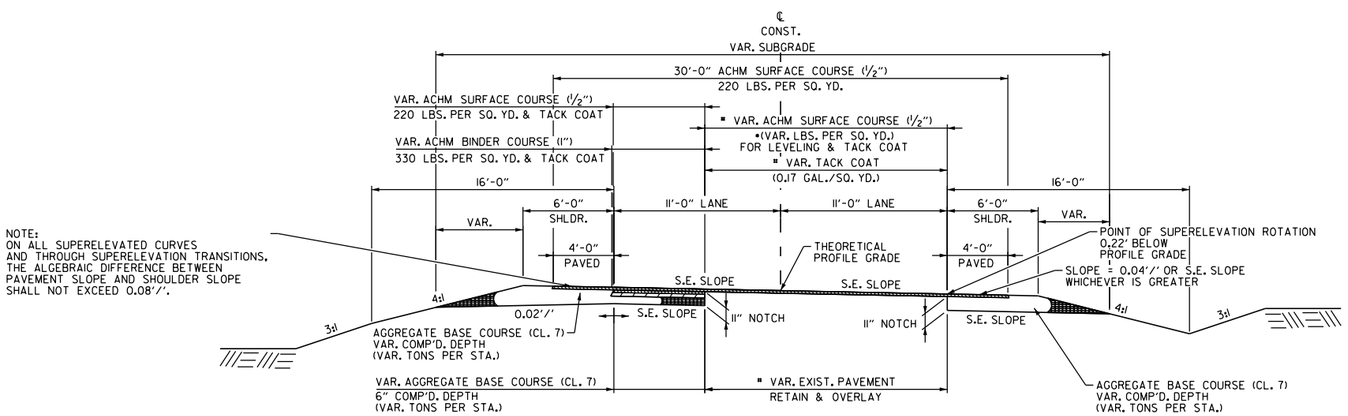

HWY. 283 - NOTCH & OVERLAY SECTION
SUPERELEVATION
STA. 114+28.96 TO STA. 116+39.26

•NOTE: TO BE USED IF AND WHERE DIRECTED BY THE ENGINEER

▪ VARIES FROM 0' TO 22' FROM STA. 114+28.96 TO STA. 116+39.26

TYPICAL SECTIONS OF IMPROVEMENT

5/2/2024
2:40:22 PM
...\CADD\Road_Sheets\TS\r061741_TS

DATE REVISED	DATE REVISED	FED.RD. DIST.NO.	STATE	JOB NO.	SHEET NO.	TOTAL SHEETS
		6	ARK.	061741	6	136
		TYPICAL SECTIONS OF IMPROVEMENT				

STATE OF ARKANSAS
REGISTERED PROFESSIONAL ENGINEER
No. 13832
RYAN W. CASTOR
05-02-2024

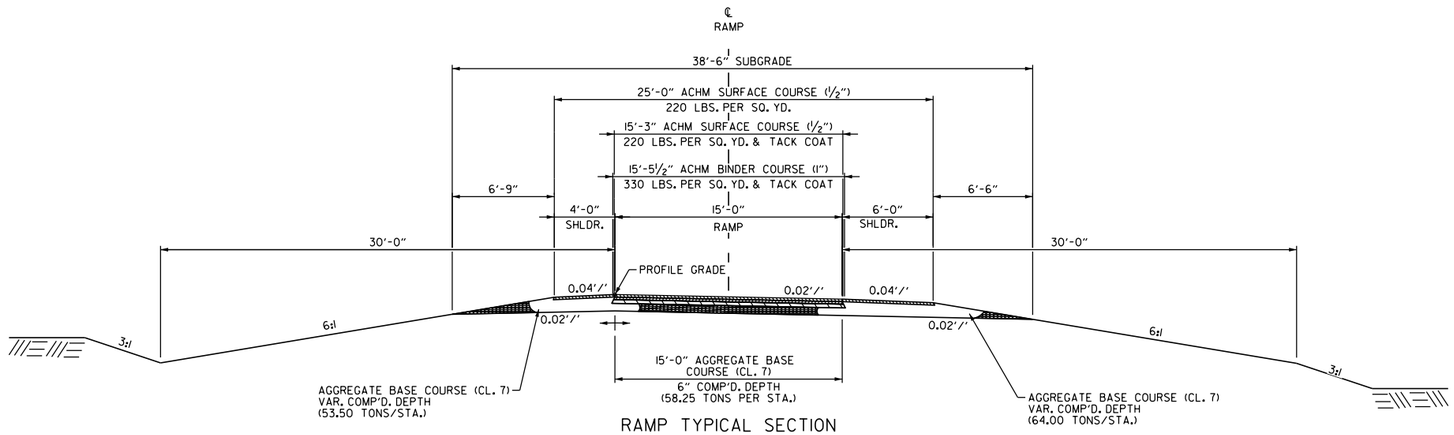

RAMP TYPICAL SECTION
(SHOWN IN DIRECTION OF TRAFFIC)
RAMP 1 STA. 201+00.00 TO STA. 202+16.14
RAMP 2 STA. 202+40.32 TO STA. 207+94.00
RAMP 3 STA. 202+92.05 TO STA. 204+50.00
RAMP 4 STA. 201+45.00 TO STA. 202+61.92

• VARIES:
STA. 1003+71.52 - STA. 1008+32.52 EB RT. AVG. WIDTH = 4.97'
STA. 1006+58.50 - STA. 1010+69.50 WB LT. AVG. WIDTH = 5.36'

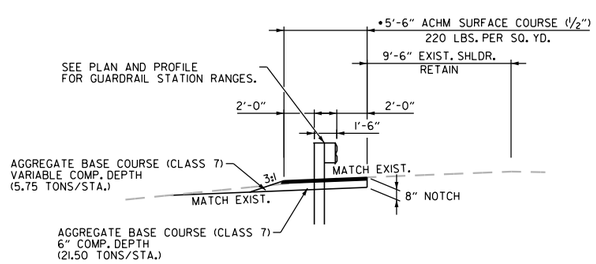

I-30 GUARDRAIL FOR OUTSIDE SHOULDERS
(SHOWN IN DIRECTION OF TRAFFIC)
STA. 1003+71.52 - STA. 1008+32.52 EB RT.
STA. 1006+58.50 - STA. 1010+69.50 WB LT.

• VARIES:
STA. 1003+30.89 - STA. 1009+16.89 EB LT. AVG. WIDTH = 7.04'
STA. 1004+86.57 - STA. 1011+77.57 WB RT. AVG. WIDTH = 8.41'

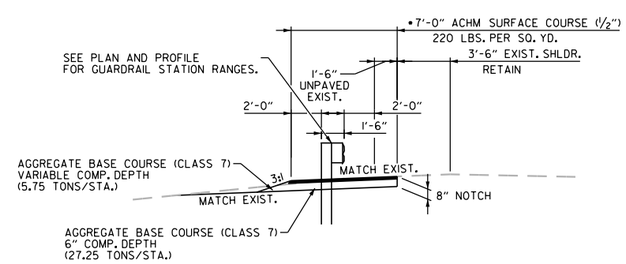

I-30 GUARDRAIL FOR INSIDE SHOULDERS
(SHOWN IN DIRECTION OF TRAFFIC)
STA. 1003+30.89 - STA. 1009+16.89 EB LT.
STA. 1004+86.57 - STA. 1011+77.57 WB RT.

NOTES:

REFER TO CROSS SECTIONS FOR DEVIATION FROM THE NORMAL SLOPES. NO CHANGES SHALL BE MADE FROM THE PLANNED SLOPES WITHOUT THE APPROVAL OF THE ENGINEER.

THE THICKNESS OF AGGREGATE BASE COURSE SHALL BE WITHIN PLUS OR MINUS ONE INCH OF THE PLAN THICKNESS SHOWN. THE CONTRACTOR WILL CORRECT ANY DEFICIENT THICKNESS THAT DOES NOT MEET TOLERANCE INDICATED. PAYMENT WILL NOT BE MADE FOR MATERIAL PLACED IN EXCESS OF THE TOLERANCE INDICATED.

ASPHALT FOR LEVELING OF EXISTING PAVEMENT SHALL BE PLACED ONLY IF AND WHERE DIRECTED BY THE ENGINEER. CALCULATIONS FOR THE AMOUNT OF LEVELING AND LEVELING OPERATIONS SHALL BE PERFORMED BEFORE CONSTRUCTING NOTCH AND WIDENING. CALCULATIONS WILL NOT BE PAID FOR DIRECTLY BUT PAYMENT WILL BE CONSIDERED INCLUDED IN THE VARIOUS PAY ITEMS.

THE FINAL 2" OF SURFACE COURSE IS TO BE PLACED AFTER ALL OTHER COURSES HAVE BEEN LAID. LONGITUDINAL JOINTS SHALL BE AT LANE LINES.

PRIOR TO AND DURING PLACEMENT OF PAVEMENT AT THE NOTCH, THE CONTRACTOR SHALL PROVIDE POSITIVE DRAINAGE AT ALL TIMES. THE METHOD(S) AND SPACING USED SHALL BE APPROVED BY THE ENGINEER. PAYMENT FOR THIS WORK SHALL BE CONSIDERED IN THE PRICE BID FOR THE VARIOUS CONTRACT ITEMS.

DATE REVISED	DATE REVISED	FED.RD. DIST.NO.	STATE	JOB NO.	SHEET NO.	TOTAL SHEETS
		6	ARK.	061741	7	136
		SPECIAL DETAILS				

STATE OF ARKANSAS
REGISTERED PROFESSIONAL ENGINEER
No. 13832
RYAN W. CASTOR
05-02-2024

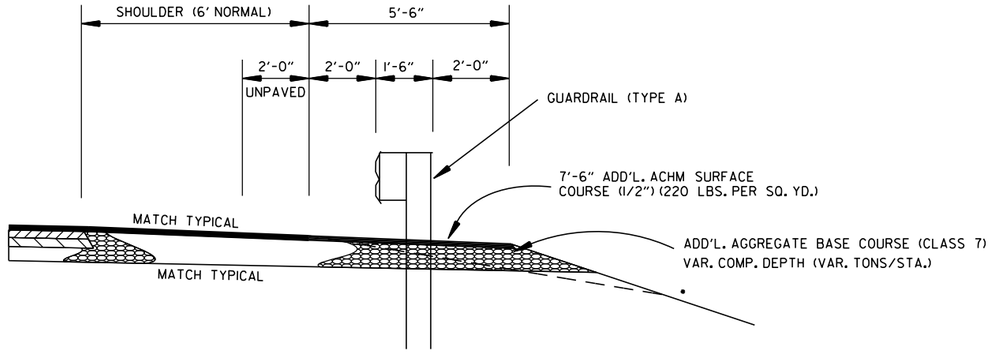

• NOTE: REFER TO STD. DWG. GR-9 AND CROSS SECTIONS FOR SLOPE REQUIREMENTS BEHIND GUARDRAIL.

WIDENING FOR GUARDRAIL AT HWY. 283 BRIDGE

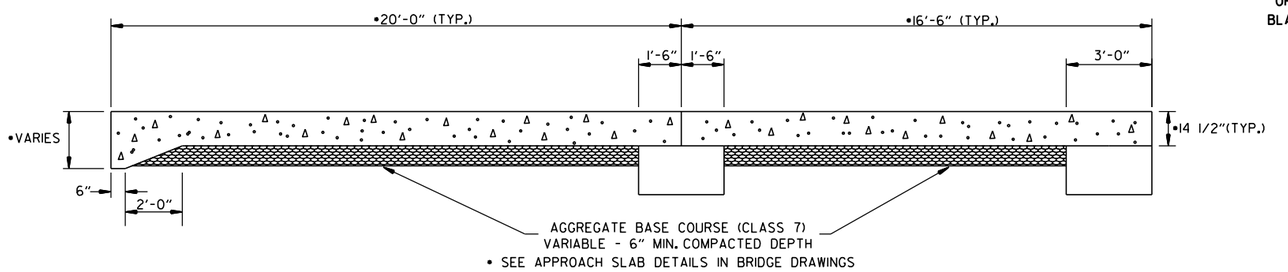

• SEE APPROACH SLAB DETAILS IN BRIDGE DRAWINGS

SECTION OF APPROACH SLAB
(FOR ASPHALT PAVEMENT)

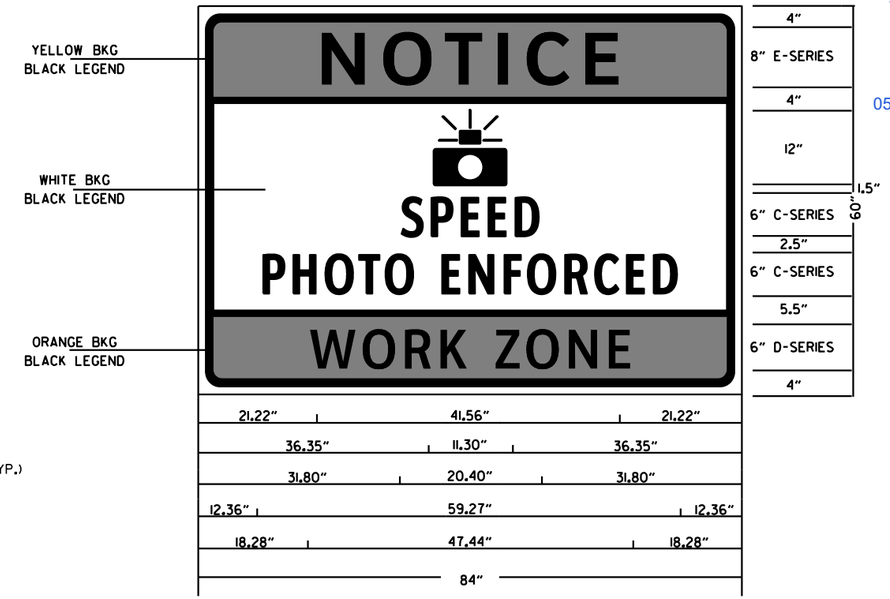

WZ-1 (INTERSTATE) SIGN

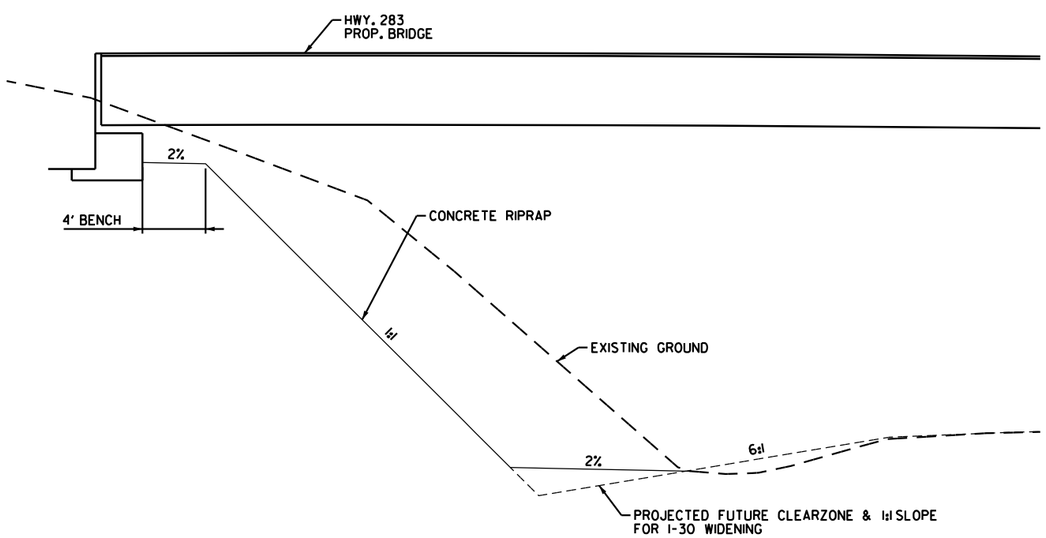

ABUTMENT GRADING DETAIL

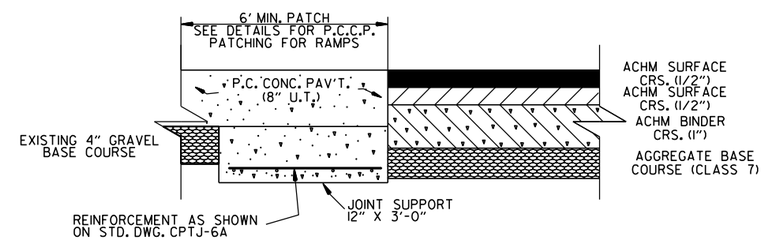

DETAILS OF JOINT SUPPORT
(PCCP TO ACHM)

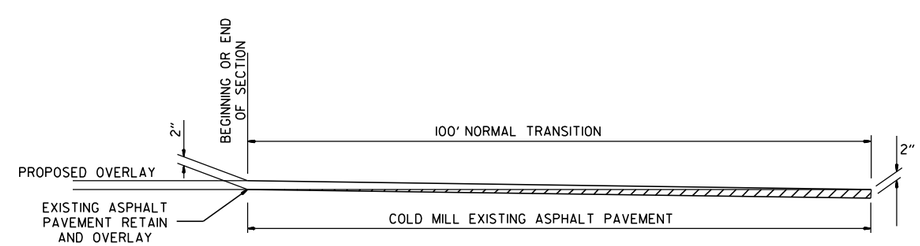

DETAIL FOR TRANSITIONS

5/2/2024
2:40:02 PM
...\Road_Sheets\MS\r061741_SD01

DATE REVISED	DATE REVISED	FED.RD. DIST.NO.	STATE	JOB NO.	SHEET NO.	TOTAL SHEETS
		6	ARK.	061741	8	136
		SPECIAL DETAILS				

STATE OF ARKANSAS
REGISTERED PROFESSIONAL ENGINEER
No. 13832
RYAN W. CASTOR
05-02-2024

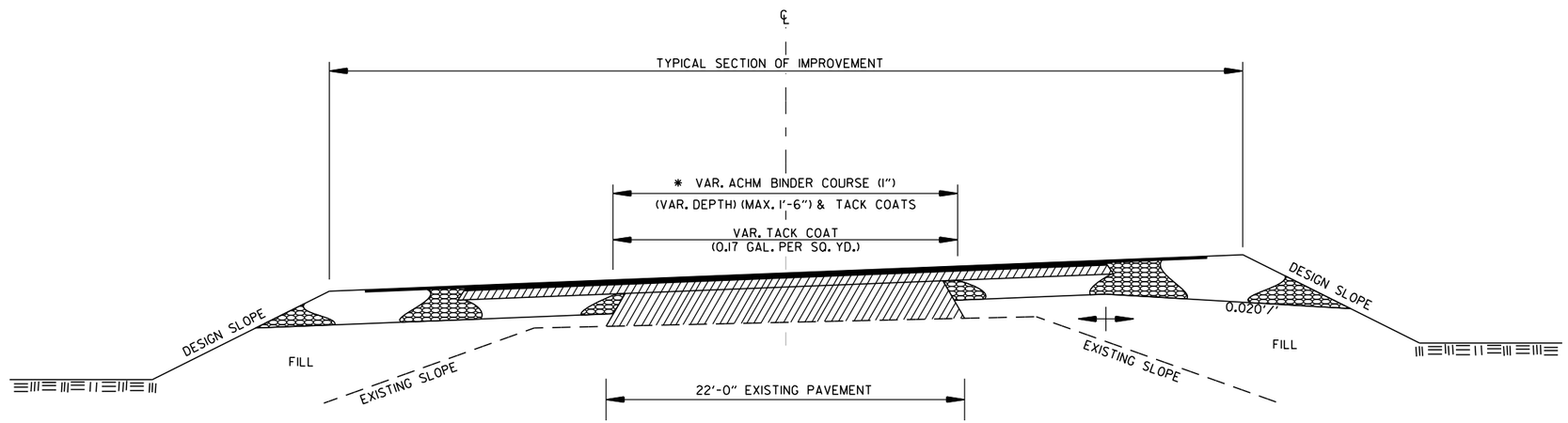

* 6" AGGREGATE BASE COURSE (CLASS 7)
TO BE REPLACED WITH ACHM BINDER COURSE (1")

METHOD OF RAISING GRADE (M.R.G.)

STA. 102+40.00 - STA. 107+02.64
STA. 114+28.96 - STA. 115+60.00

NOTES:

(1) THIS DETAIL TO BE USED ONLY WHERE DIRECTED BY THE ENGINEER.

(2) QUANTITIES FOR METHOD OF GRADE RAISE USING ASPHALT WERE CALCULATED ON THIS PROJECT AT LOCATIONS WHERE THE DISTANCE BETWEEN THE EXISTING ASPHALT ROADWAY AND THE PROPOSED SUBGRADE WAS ONE FOOT OR LESS.

(3) IN LOCATIONS WHERE THE DISTANCE BETWEEN THE PROPOSED SUBGRADE AND THE EXISTING ASPHALT ROADWAY IS MORE THAN ONE FOOT, SCARIFICATION OF THE EXISTING ASPHALT ROADWAY WILL BE REQUIRED AS STATED IN SECTION 210, SUBSECTION 210.09, OF THE STANDARD SPECIFICATIONS.

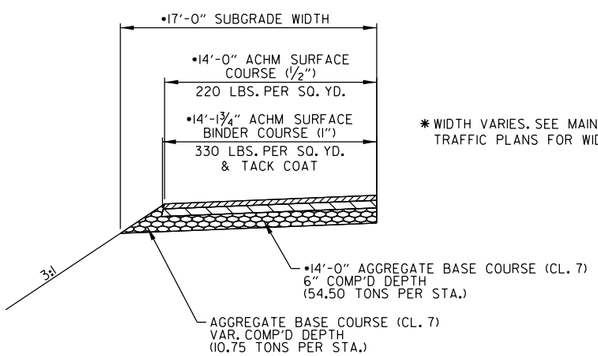

* WIDTH VARIES. SEE MAINTENANCE OF TRAFFIC PLANS FOR WIDTHS.

TEMPORARY WIDENING FOR MAINTENANCE OF TRAFFIC

STA. 100+40.00 - STA. 108+03.59 RT.
STA. 113+41.52 - STA. 114+89.47 RT.
STA. 115+51.06 - STA. 116+80.87 RT.
RAMP 1 STA. 200+00.00 - STA. 201+73.83 RT.
RAMP 1 STA. 200+00.00 - STA. 201+44.29 LT.
RAMP 2 STA. 202+32.43 - STA. 208+94.00 LT.
RAMP 2 STA. 202+47.85 - STA. 206+27.05 RT.
RAMP 3 STA. 202+78.65 - STA. 205+39.08 RT.
RAMP 4 STA. 199+70.00 - STA. 201+87.16 LT.
RAMP 4 STA. 199+70.00 - STA. 201+45.00 RT.

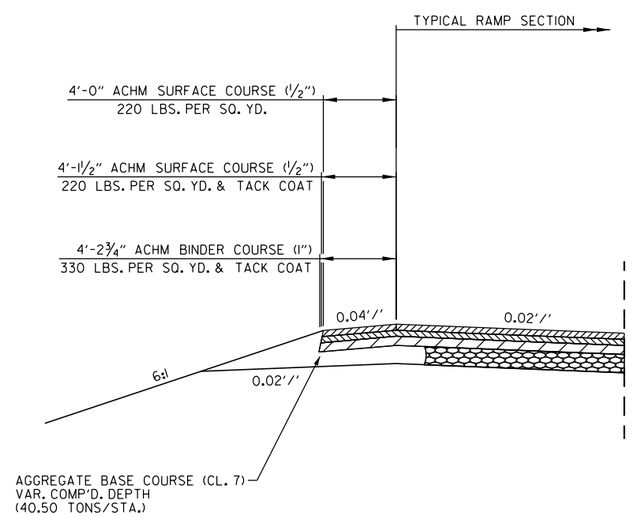

FULL DEPTH SHOULDERS FOR MAINTENANCE OF TRAFFIC

RAMP 1 STA. 201+00.00 - STA. 202+17.08 LT.
RAMP 4 STA. 201+45.00 - STA. 201+57.34 RT.
RAMP 4 STA. 201+57.34 - STA. 202+46.13 RT.

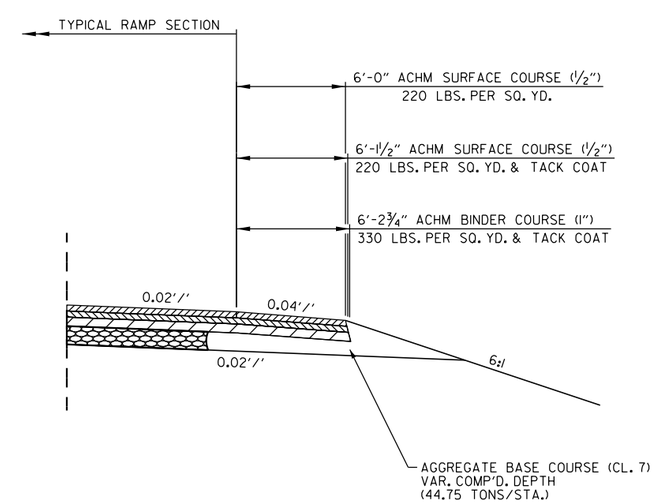

FULL DEPTH SHOULDERS FOR MAINTENANCE OF TRAFFIC

RAMP 2 STA. 202+38.34 - STA. 203+50.25 RT.
RAMP 2 STA. 203+50.25 - STA. 207+94.00 RT.
RAMP 3 STA. 203+63.62 - STA. 204+50.00 LT.

SPECIAL DETAILS

5/2/2024
2:40:51 PM
...\Road\Sheets\MS\r061741_SD01

DATE REVISED	DATE REVISED	FED.RD. DIST.NO.	STATE	JOB NO.	SHEET NO.	TOTAL SHEETS
		6	ARK.	061741	9	136
		SPECIAL DETAILS				

STATE OF ARKANSAS
REGISTERED PROFESSIONAL ENGINEER
No. 13832
RYAN W. CASTOR
05-02-2024

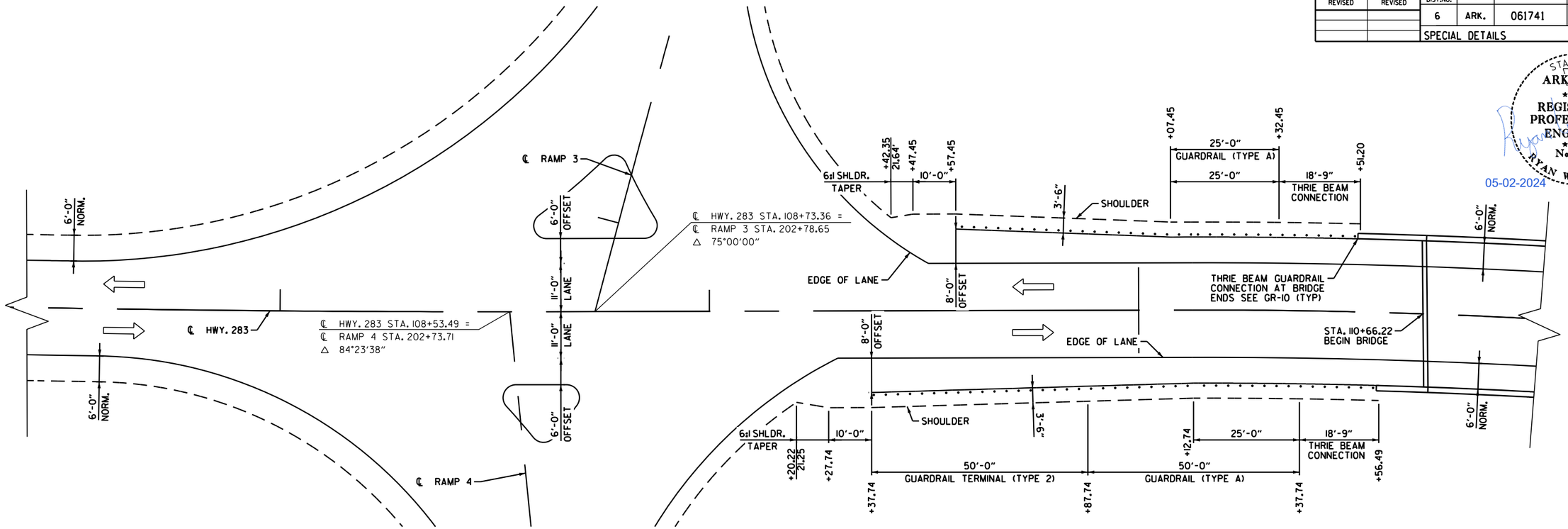

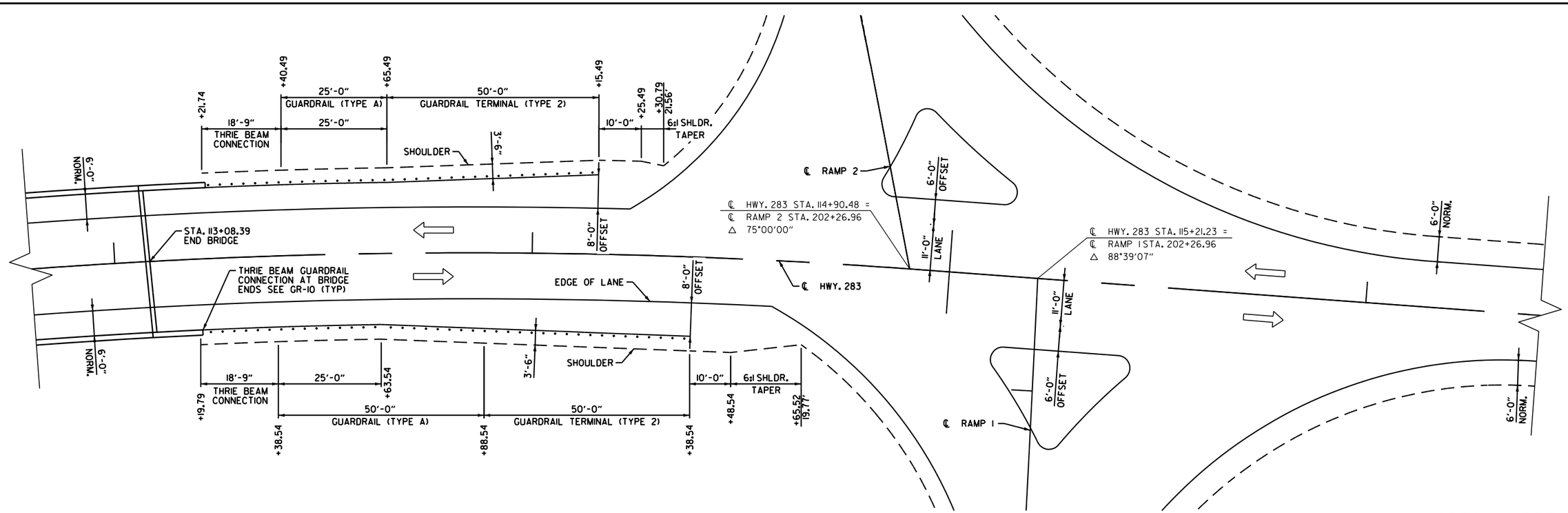

WIDENING FOR GUARDRAIL AT BRIDGE ENDS - HWY. 283 BRIDGE

SPECIAL DETAILS

5/2/2024
2:40:51 PM
...\Road\Sheets\MS\r061741_SD01

DATE REVISED	DATE REVISED	FED.RD. DIST.NO.	STATE	JOB NO.	SHEET NO.	TOTAL SHEETS
		6	ARK.	061741	10	136
		SPECIAL DETAILS				

STATE OF ARKANSAS
REGISTERED PROFESSIONAL ENGINEER
No. 13832
RYAN W. CASTOR
05-02-2024

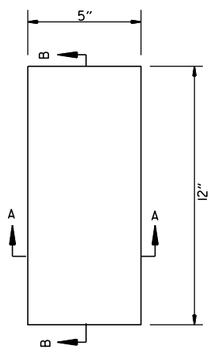

PLAN

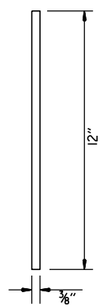

SECTION B-B

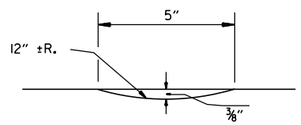

SECTION A-A

DETAILS OF RUMBLE STRIPS

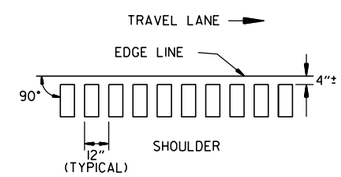

LOCATION PLAN OF RUMBLE STRIPS
LEFT OR RIGHT SHOULDER

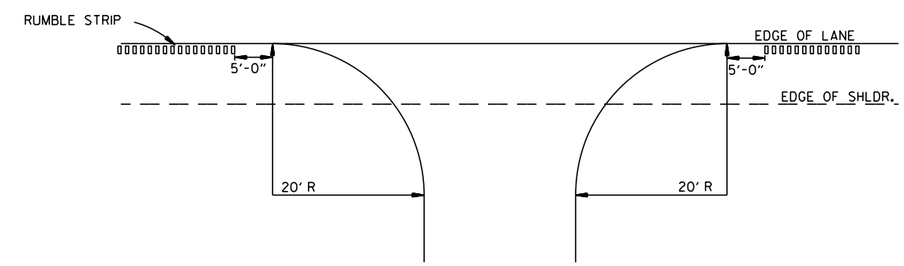

DETAIL FOR RUMBLE STRIP GAP
AT DRIVEWAY TURNOUTS

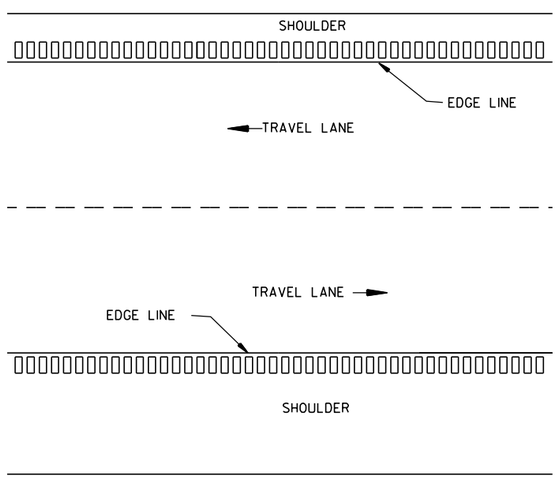

PLAN VIEW

GENERAL NOTES

1. RUMBLE STRIPS SHALL NOT BE INSTALLED ON CURB SECTIONS, BRIDGE DECKS, APPROACH SLABS, INTERSECTING STREETS OR ROADWAYS, RESIDENTIAL OR COMMERCIAL DRIVEWAYS OR ACROSS TRANSVERSE JOINTS OF CONCRETE SHOULDERS.
2. RUMBLE STRIPS SHALL NOT BE INSTALLED ON A PAVED SHOULDER THAT IS USED AS A DECELERATION LANE FOR THE LENGTH DEEMED APPROPRIATE BY THE ENGINEER.
3. THE 4" OFFSET FROM THE EDGE LINE MAY BE INCREASED TO AVOID LONGITUDINAL JOINTS. IN ALL CASES, THE LATERAL DEVIATION FROM THE PLANNED OFFSET SHOULD BE KEPT TO A MINIMUM.
4. RUMBLE STRIPS SHALL BE MEASURED BY THE LINEAR FOOT LONGITUDINALLY ALONG THE SHOULDER. PAYMENT SHALL ONLY INCLUDE THAT PORTION OF THE SHOULDER ON WHICH RUMBLE STRIPS HAVE BEEN CONSTRUCTED. NO MEASUREMENT OR PAYMENT WILL BE MADE FOR GAPS, DRIVEWAYS, TURNOUTS, OR OTHER PUBLIC ROAD INTERSECTIONS WHERE RUMBLE STRIPS HAVE NOT BEEN CONSTRUCTED.
5. THE ⅜" DEPTH SHALL GENERALLY APPLY FOR THE ENTIRE 12" LENGTH. SOME VARIATION TO SUIT SHOULDER SLOPE BREAKS MAY BE NECESSARY.

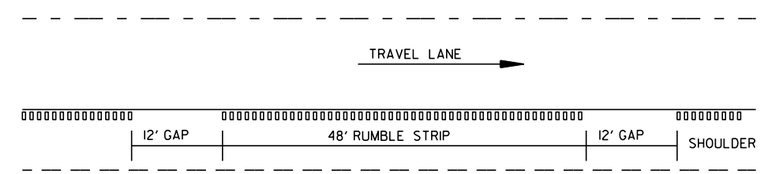

NOTE: GAP PATTERN SHALL BE ADJUSTED BY THE ENGINEER IN THE FIELD ALLOWING FOR DRIVEWAYS TO SERVE AS THE GAP.

DETAIL FOR GAP PATTERN RUMBLE STRIP

5/2/2024
2:40:51 PM
...\Road\Sheets\MS\r061741_SD01

DATE REVISED	DATE REVISED	FED.RD. DIST.NO.	STATE	JOB NO.	SHEET NO.	TOTAL SHEETS
		6	ARK.	061741	11	136
		SPECIAL DETAILS				

STATE OF ARKANSAS
REGISTERED PROFESSIONAL ENGINEER
No. 13832
RYAN W. CASTOR
05-02-2024

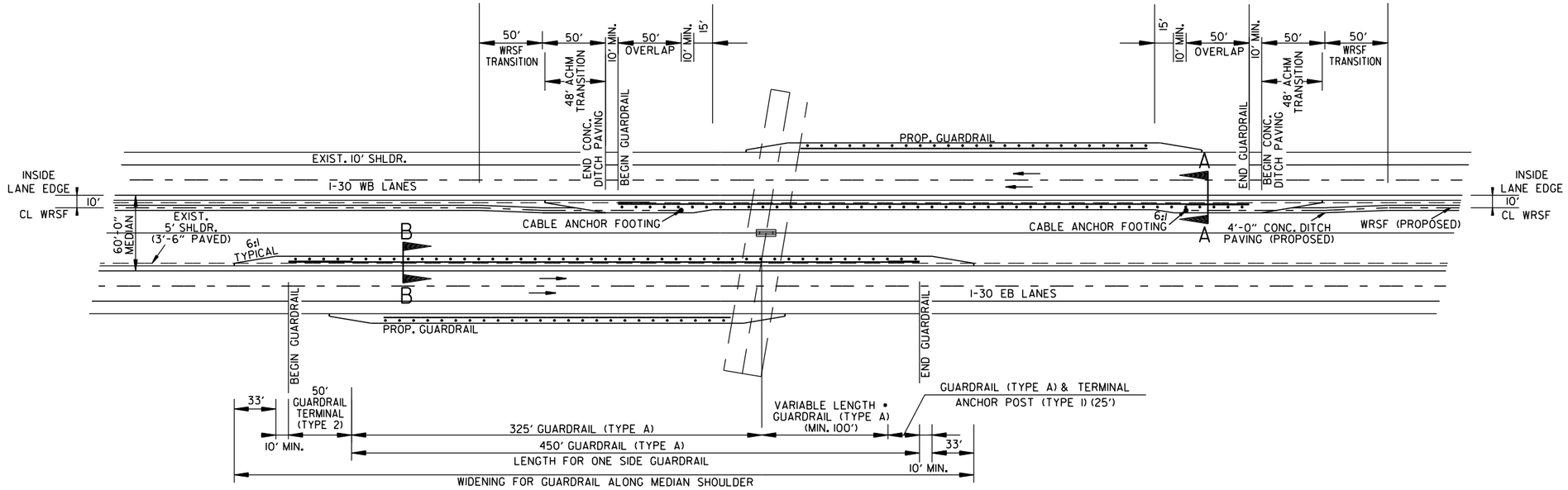

DETAIL AT OVERPASSES

NOTE: REFER TO PLAN SHEETS
FOR PLACEMENT OF WIRE ROPE SAFETY FENCE
ON WESTBOUND FORESLOPES.

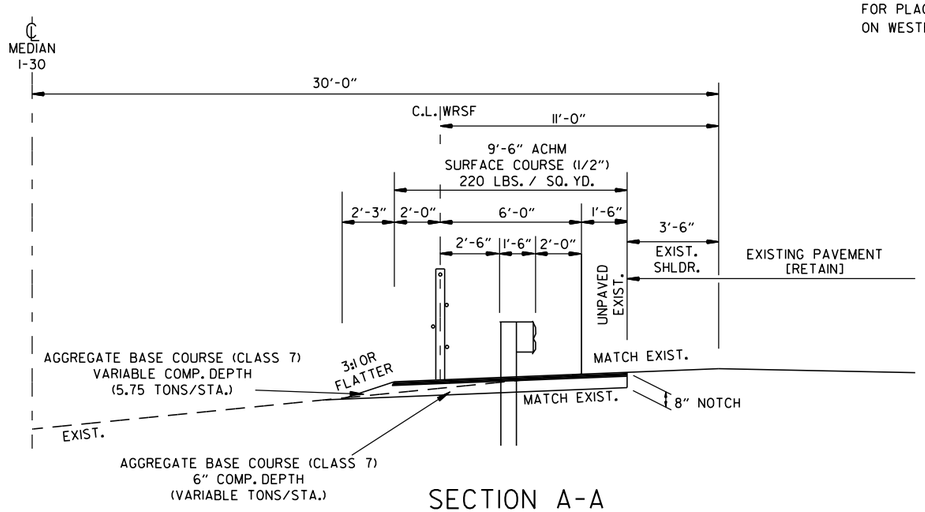

SECTION A-A

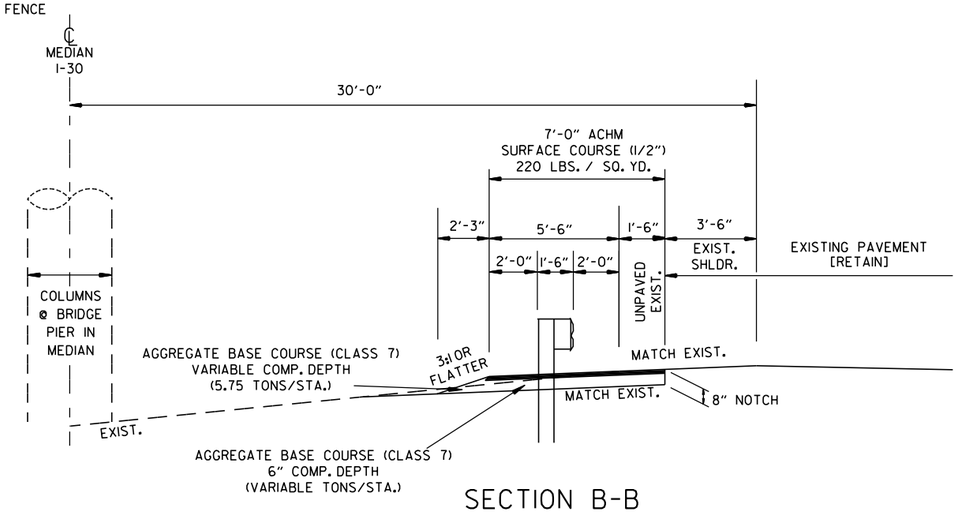

SECTION B-B

DETAILS OF INSIDE SHOULDER WIDENING FOR GUARDRAIL AND OVERLAPS WITH ENDS OF WIRE ROPE SAFETY FENCE

5/2/2024
2:40:56 PM
...\Road_Sheets\MS\r061741_SD01

DATE REVISED	DATE REVISED	FED.RD. DIST.NO.	STATE	JOB NO.	SHEET NO.	TOTAL SHEETS
		6	ARK.	061741	12	136
		SPECIAL DETAILS				

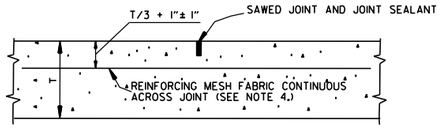

SECTION B-B

WARPING JOINT

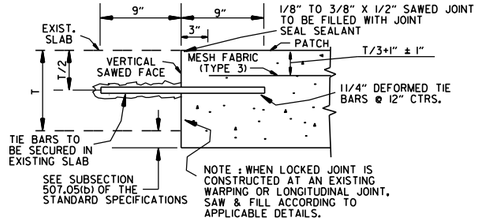

SECTION D-D

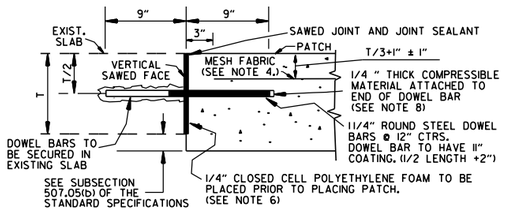

SECTION E-E

FREE TRANSVERSE JOINT

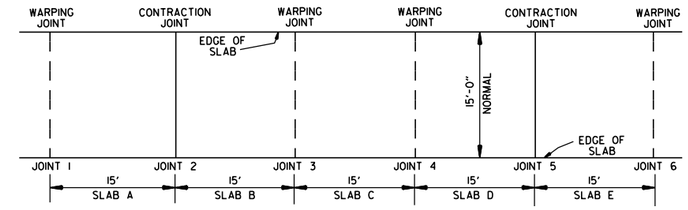

PLAN OF PAVEMENT REPAIR
(FULL SLABS)

TYPICAL SLAB REPLACEMENT EXAMPLES

SLAB(S) TO BE RECONSTRUCTED	TYPE OF JOINT TO BE CONSTRUCTED					
	JOINT 1	JOINT 2	JOINT 3	JOINT 4	JOINT 5	JOINT 6
A OR D	LOCKED	FREE		LOCKED	FREE	
B OR E		FREE	LOCKED		FREE	LOCKED
A & B OR D & E	LOCKED	CONTRACTION	LOCKED	LOCKED	CONTRACTION	LOCKED
B & C		FREE	WARPING	LOCKED		
B, C & D		FREE	WARPING	WARPING	FREE	
C			LOCKED	LOCKED		

STATE OF ARKANSAS
REGISTERED PROFESSIONAL ENGINEER
No. 13832
RYAN W. CASTOR
05-02-2024

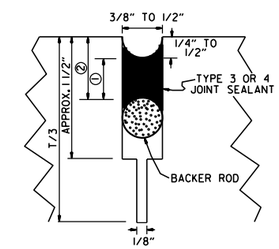

DETAIL OF SAWED CONTRACTION JOINT

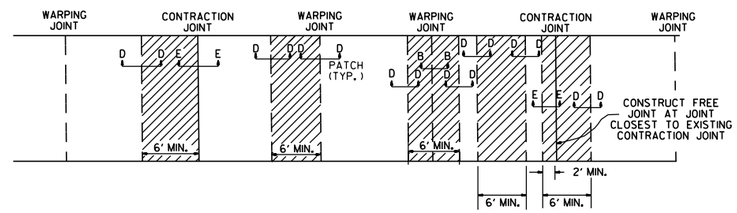

PLAN OF PAVEMENT REPAIR
(PARTIAL SLABS)

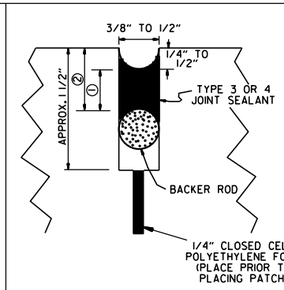

DETAIL OF SAWED FREE TRANSVERSE JOINT

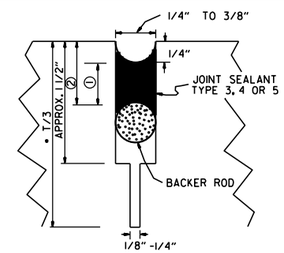

*NOTE: T/3 SAW CUT NOT REQUIRED FOR LONGITUDINAL CONSTRUCTION JOINT.

DETAIL OF SAWED WARPING JOINT

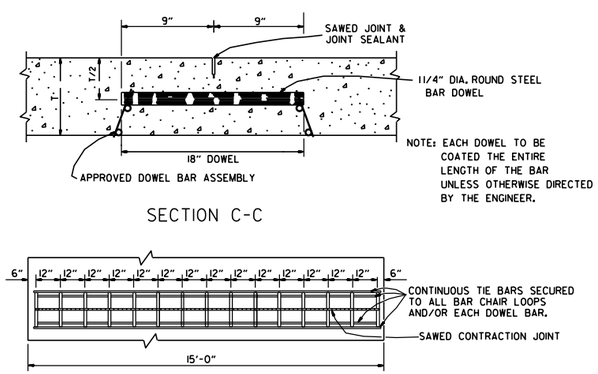

NOTE: EACH DOWEL TO BE COATED THE ENTIRE LENGTH OF THE BAR UNLESS OTHERWISE DIRECTED BY THE ENGINEER.

SECTION C-C

15' PAVEMENT
15 DOWELS
PLAN - CONTRACTION JOINT

NOTE: FOR 15' PAVEMENT USE 15 DOWELS @ 12" CTRS. WITH 6" SPACING FROM C.L. AND EDGE OF SLAB TO FIRST BAR. FOR PAVEMENT WIDTHS OTHER THAN THOSE SHOWN ABOVE, USE DOWELS AT 12" CTRS. WITH 6" MAX. SPACING FROM C.L. TO FIRST BAR. DISTANCE FROM EDGE OF SLAB TO FIRST BAR SHALL BE ADJUSTED TO MAINTAIN 12" DOWEL BAR SPACING

CONTRACTION JOINT DETAILS

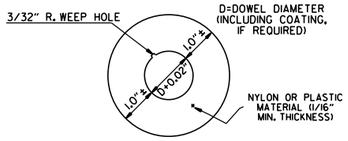

DETAIL OF EPOXY RETENTION DISK

NOTE: EPOXY RETENTION DISK SHALL BE SLIPPED TIGHTLY OVER TIE BARS AND FIRMLY AGAINST THE SLAB FACE AFTER INSERTING TIE BAR AND EPOXY INTO HOLE

JOINT CONFIGURATION FOR TYPE 3 OR 4 JOINT SEALANT

JOINT WIDTH	SEALANT THICKNESS ①	BACKER ROD DIAMETER	BACKER ROD PLACEMENT DEPTH ②
INCHES			
1/4	1/4	3/8	1/2
3/8	1/4	1/2	1/2
1/2	1/4	5/8	1/2

JOINT CONFIGURATION FOR TYPE 5 JOINT SEALANT

JOINT WIDTH	SEALANT THICKNESS ①	BACKER ROD DIAMETER	BACKER ROD PLACEMENT DEPTH ②
INCHES			
1/4	1/2	3/8	3/4
3/8	3/4	1/2	1

NOTES FOR PAVEMENT REPAIR:

1. EXACT SIZE AND LOCATION OF AREA TO BE REPAIRED SHALL BE DETERMINED BY THE ENGINEER. ALL PATCHES SHALL EXTEND ACROSS THE FULL WIDTH OF THE SLAB AS SHOWN IN THESE DETAILS.
2. THE FINAL SURFACE FINISH FOR PATCHES SHALL MATCH THAT OF THE EXISTING PAVEMENT.
3. WHEN AREA TO BE REPAIRED INCLUDES AN EXISTING JOINT, THE JOINT SHALL BE RECONSTRUCTED TO THE CONFIGURATION SHOWN IN THESE DETAILS.
4. ALL REPAIRED AREAS SHALL BE REINFORCED WITH MESH FABRIC AS SHOWN. DEPTH OF MESH PLACEMENT SHALL HAVE A TOLERANCE OF +1INCH. MESH FABRIC SHALL BE 12 X 12 - W4 X W4 WELDED WIRE FENCE (MINIMUM WIRE SIZE). LAPS SHALL BE MINIMUM 6" IN EACH DIRECTION. MINIMUM COVER AT EDGES SHALL BE 2".
5. FORMS FOR PAVEMENT REPAIR SHALL BE METAL UNLESS OTHERWISE APPROVED BY THE ENGINEER.
6. CLOSED CELL POLYETHYLENE FOAM SHALL BE SECURED TO SAWED FACE OF EXISTING P.C.C. PAVEMENT WITH ADHESIVE OR ADHESIVE TAPE AS APPROVED BY THE ENGINEER AND TRIMMED FLUSH WITH TOP OF EXISTING SLAB TO PREVENT DISPLACEMENT WHEN THE PATCH IS BEING PLACED.
7. WHEN THE PATCH IS PLACED OVER GRANULAR BASE, REMOVE ANY LOOSE BASE MATERIAL, COMPACT REMAINING BASE AS NECESSARY AND PLACE PATCH. WHEN PATCH IS PLACED OVER TREATED BASE, REMOVE ANY LOOSE BASE MATERIAL AND PLACE PATCH.
8. 1/4" THICK COMPRESSIBLE MATERIAL SHALL BE ATTACHED TO THE ENDS OF DOWEL BARS AT ALL FREE TRANSVERSE JOINTS (SEE SECTION E-E). THE MATERIAL SHALL BE THE SAME DIAMETER AS THE DOWEL BAR. A PLASTIC CAP OF OTHER TYPE OF DEVICE MAY BE USED WITH THE APPROVAL OF THE ENGINEER.
9. DOWEL BARS SHALL BE PLACED IN ACCORDANCE WITH THE DIMENSIONS SHOWN. A TOLERANCE OF PLUS OR MINUS ONE INCH WILL BE ALLOWED FOR VERTICAL AND LATERAL PLACEMENT AND A TOLERANCE OF PLUS OR MINUS 1/4" WILL BE ALLOWED FOR THE TILT AND SKEW.

DETAILS OF PORTLAND CEMENT CONCRETE PAVEMENT PATCHING FOR RAMPS

5/2/2024
2:06:52 PM
...\Road_Sheets\MSSr061741_SD01

DATE REVISED	DATE REVISED	FED.RD. DIST.NO.	STATE	JOB NO.	SHEET NO.	TOTAL SHEETS
		6	ARK.	061741	13	136
		SPECIAL DETAILS				

STATE OF ARKANSAS
REGISTERED PROFESSIONAL ENGINEER
No. 13832
RYAN W. CASTOR
05-02-2024

NOTES:

STATION AND OFFSETS LABELS ARE BASED ON HWY. 283 CENTERLINE ALIGNMENT.

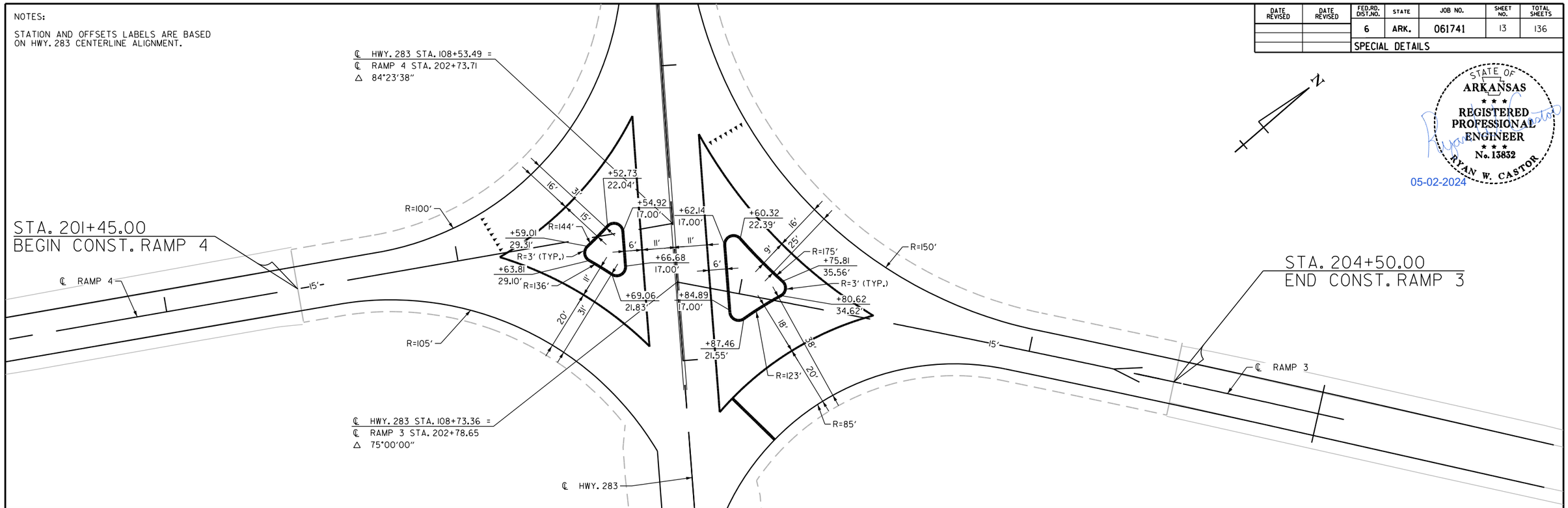

NOTES:

STATION AND OFFSETS LABELS ARE BASED ON HWY. 283 CENTERLINE ALIGNMENT.

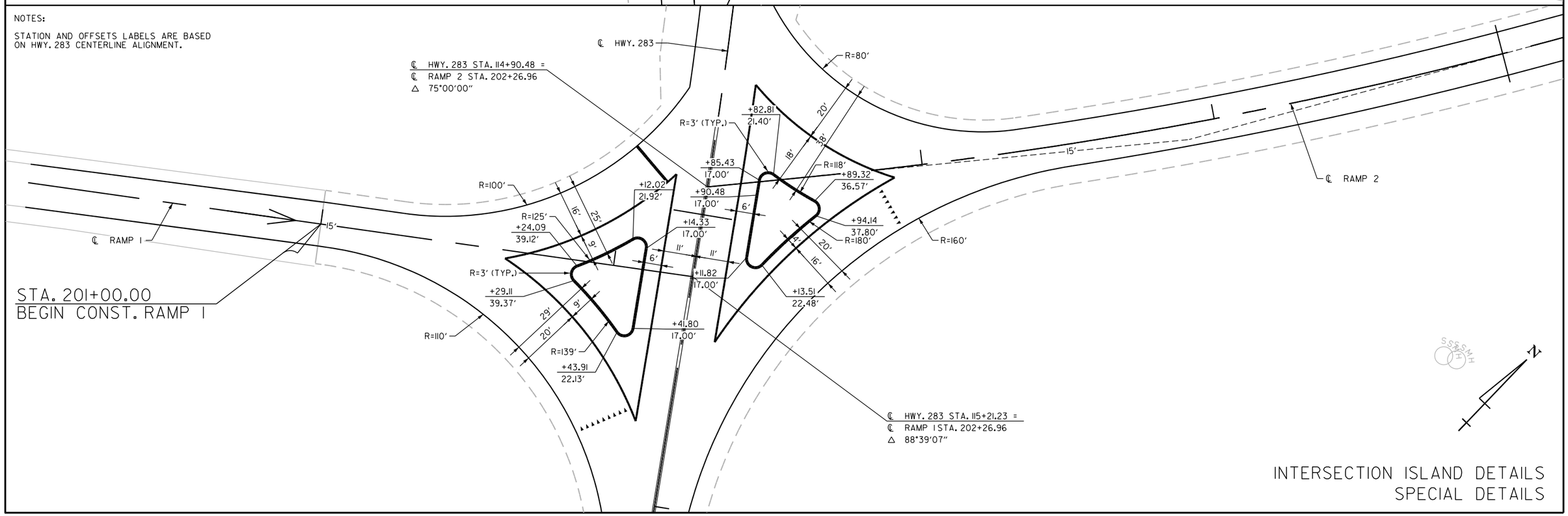

INTERSECTION ISLAND DETAILS
SPECIAL DETAILS

5/2/2024
2:40:57 PM
...\MSV-061741_SD02.dgn

DATE REVISED	DATE REVISED	FED.RD. DIST.NO.	STATE	JOB NO.	SHEET NO.	TOTAL SHEETS
		6	ARK.	061741	14	136
		TEMPORARY EROSION CONTROL DETAILS				

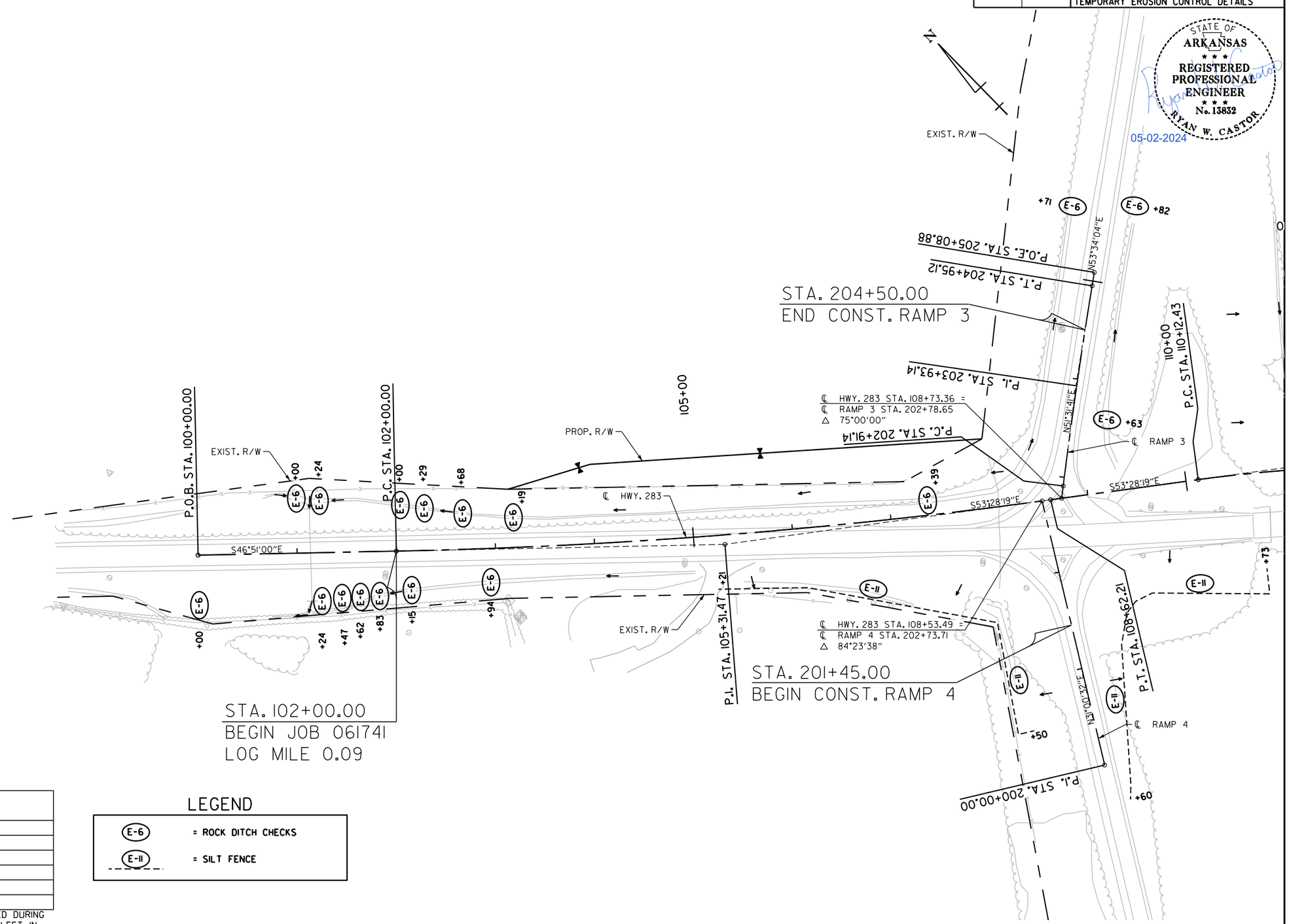

REVISIONS

DATE OF REVISION	REVISION

NOTE: EROSION CONTROL MEASURES TO BE PLACED DURING APPROPRIATE STAGES. THESE DEVICES SHALL BE LEFT IN PLACE AS LONG AS REQUIRED TO CONTROL EROSION.

LEGEND

E-6	= ROCK DITCH CHECKS
E-11	= SILT FENCE

CLEARING AND GRUBBING
TEMPORARY EROSION CONTROL DETAILS

5/2/2024
2:40:07 PM
...\EC\r061741_CG_01.dgn

DATE REVISED	DATE REVISED	FED.RD. DIST.NO.	STATE	JOB NO.	SHEET NO.	TOTAL SHEETS
		6	ARK.	061741	15	136
		TEMPORARY EROSION CONTROL DETAILS				

STATE OF ARKANSAS
REGISTERED PROFESSIONAL ENGINEER
No. 13832
RYAN W. CASTOR
05-02-2024

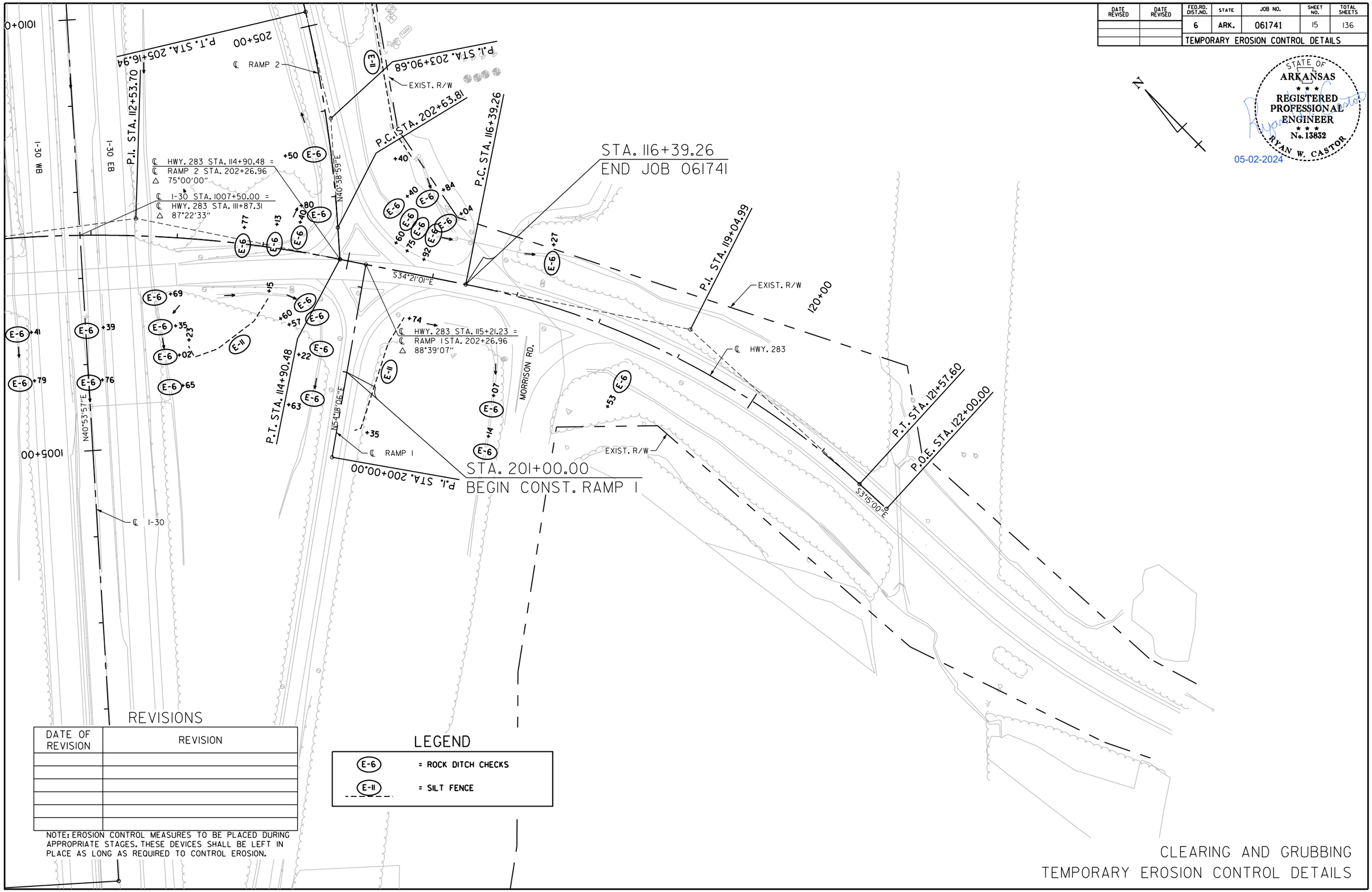

REVISIONS

DATE OF REVISION	REVISION

NOTE: EROSION CONTROL MEASURES TO BE PLACED DURING APPROPRIATE STAGES. THESE DEVICES SHALL BE LEFT IN PLACE AS LONG AS REQUIRED TO CONTROL EROSION.

LEGEND

E-6	= ROCK DITCH CHECKS
E-11	= SILT FENCE

CLEARING AND GRUBBING
TEMPORARY EROSION CONTROL DETAILS

5/2/2024
2:41:13 PM
...\EC\r061741_CG_02.dgn

DATE REVISED	DATE REVISED	FED.RD. DIST.NO.	STATE	JOB NO.	SHEET NO.	TOTAL SHEETS
		6	ARK.	061741	16	136
		TEMPORARY EROSION CONTROL DETAILS				

STATE OF ARKANSAS
REGISTERED PROFESSIONAL ENGINEER
No. 13832
RYAN W. CASTOR
05-02-2024

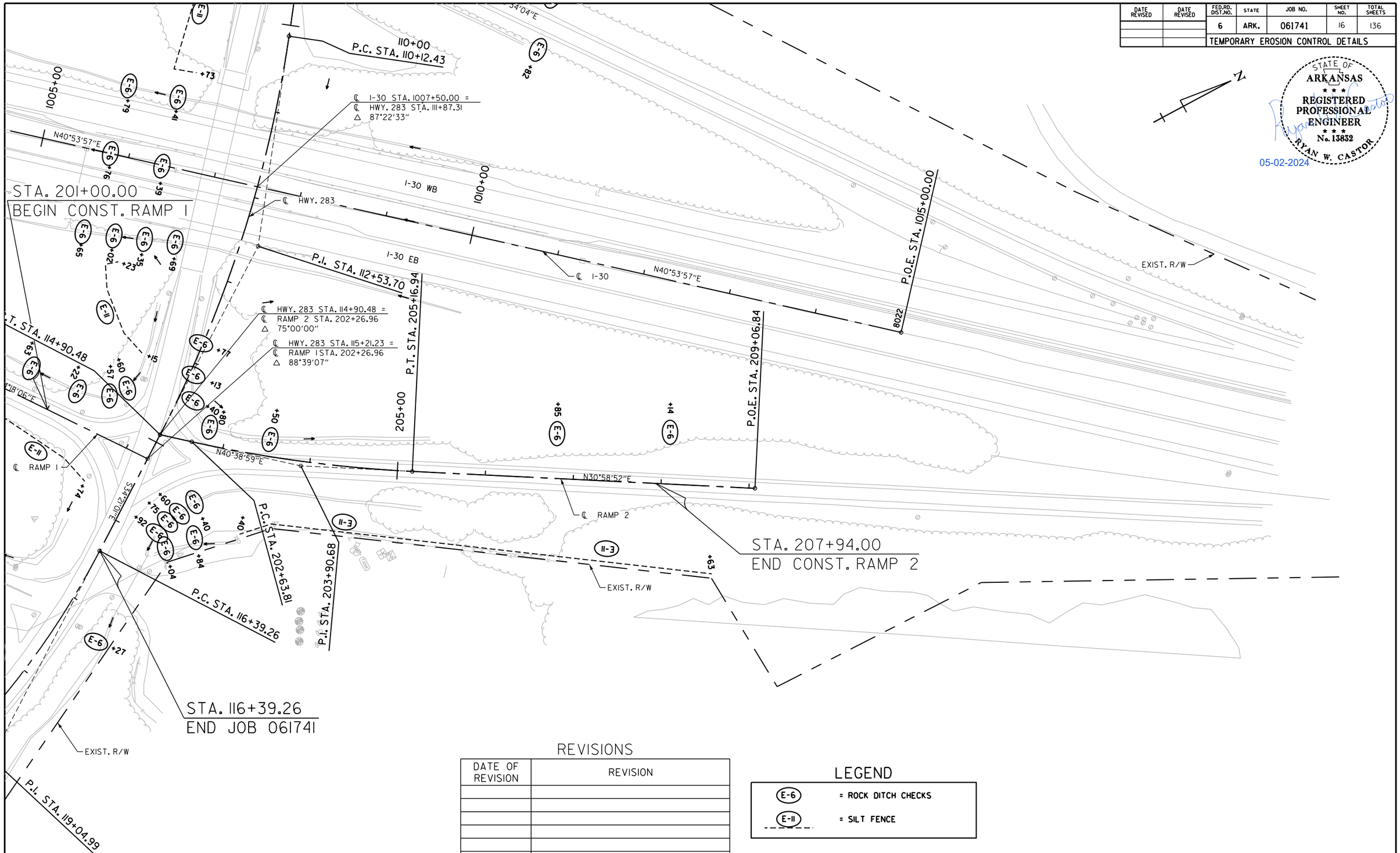

REVISIONS

DATE OF REVISION	REVISION

NOTE: EROSION CONTROL MEASURES TO BE PLACED DURING APPROPRIATE STAGES. THESE DEVICES SHALL BE LEFT IN PLACE AS LONG AS REQUIRED TO CONTROL EROSION.

LEGEND

E-6	= ROCK DITCH CHECKS
E-11	= SILT FENCE

CLEARING AND GRUBBING
TEMPORARY EROSION CONTROL DETAILS

5/2/2024
2:41:20 PM
...\ECI_r061741_CG_03.dgn

DATE REVISED	DATE REVISED	FED.RD. DIST.NO.	STATE	JOB NO.	SHEET NO.	TOTAL SHEETS
		6	ARK.	061741	17	136
		TEMPORARY EROSION CONTROL DETAILS				

STATE OF ARKANSAS
REGISTERED PROFESSIONAL ENGINEER
No. 13832
RYAN W. CASTOR
05-02-2024

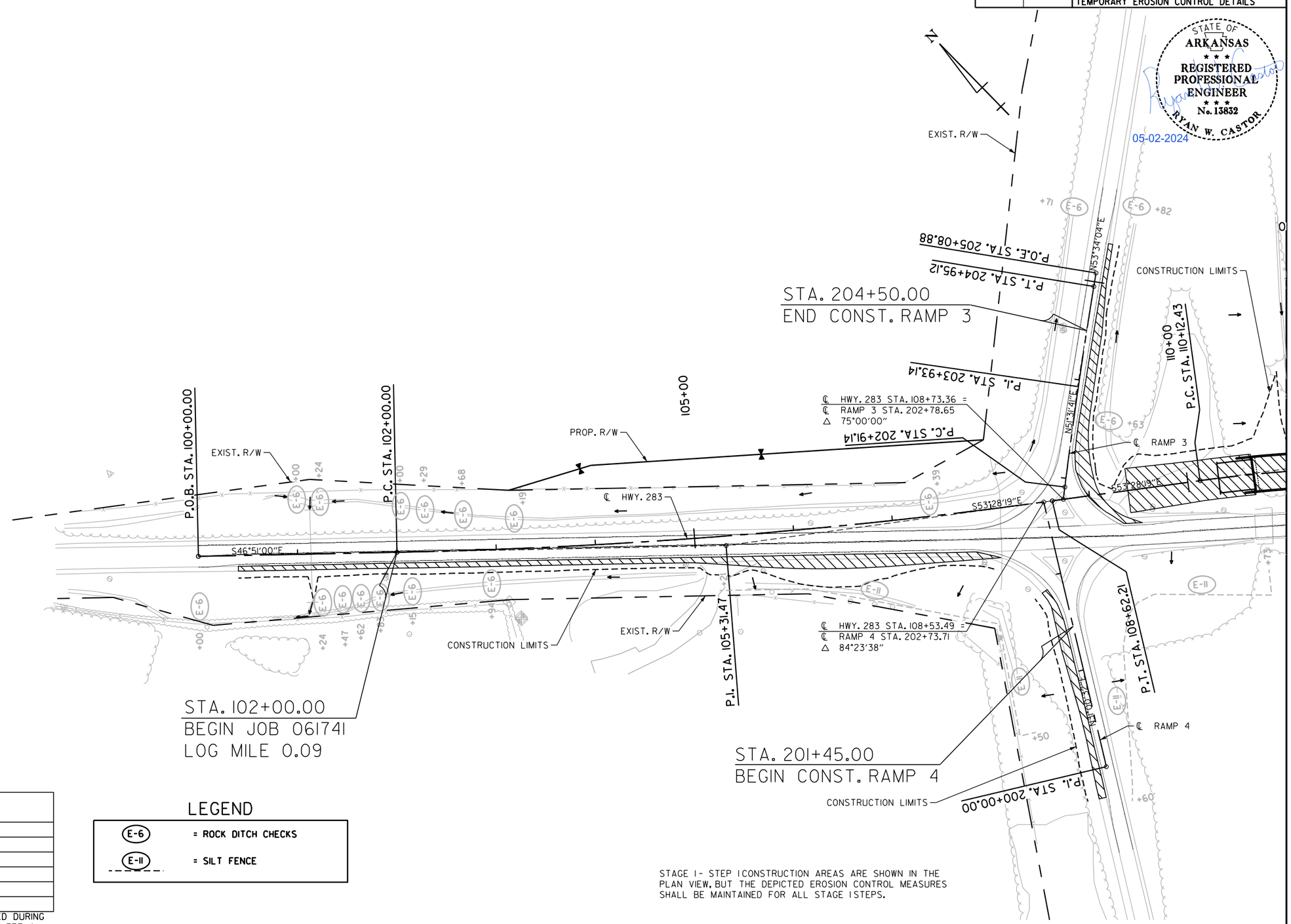

REVISIONS

DATE OF REVISION	REVISION

NOTE: EROSION CONTROL MEASURES TO BE PLACED DURING APPROPRIATE STAGES. THESE DEVICES SHALL BE LEFT IN PLACE AS LONG AS REQUIRED TO CONTROL EROSION.

LEGEND

E-6	= ROCK DITCH CHECKS
E-11	= SILT FENCE

STAGE 1- STEP 1 CONSTRUCTION AREAS ARE SHOWN IN THE PLAN VIEW, BUT THE DEPICTED EROSION CONTROL MEASURES SHALL BE MAINTAINED FOR ALL STAGE 1 STEPS.

STAGE 1 - ALL STEPS
TEMPORARY EROSION CONTROL DETAILS

5/2/2024
2:41:26 PM
...\EC\r061741_EC_01.dgn

DATE REVISED	DATE REVISED	FED.RD. DIST.NO.	STATE	JOB NO.	SHEET NO.	TOTAL SHEETS
		6	ARK.	061741	18	136
		TEMPORARY EROSION CONTROL DETAILS				

STATE OF ARKANSAS
REGISTERED PROFESSIONAL ENGINEER
No. 13832
RYAN W. CASTOR
05-02-2024

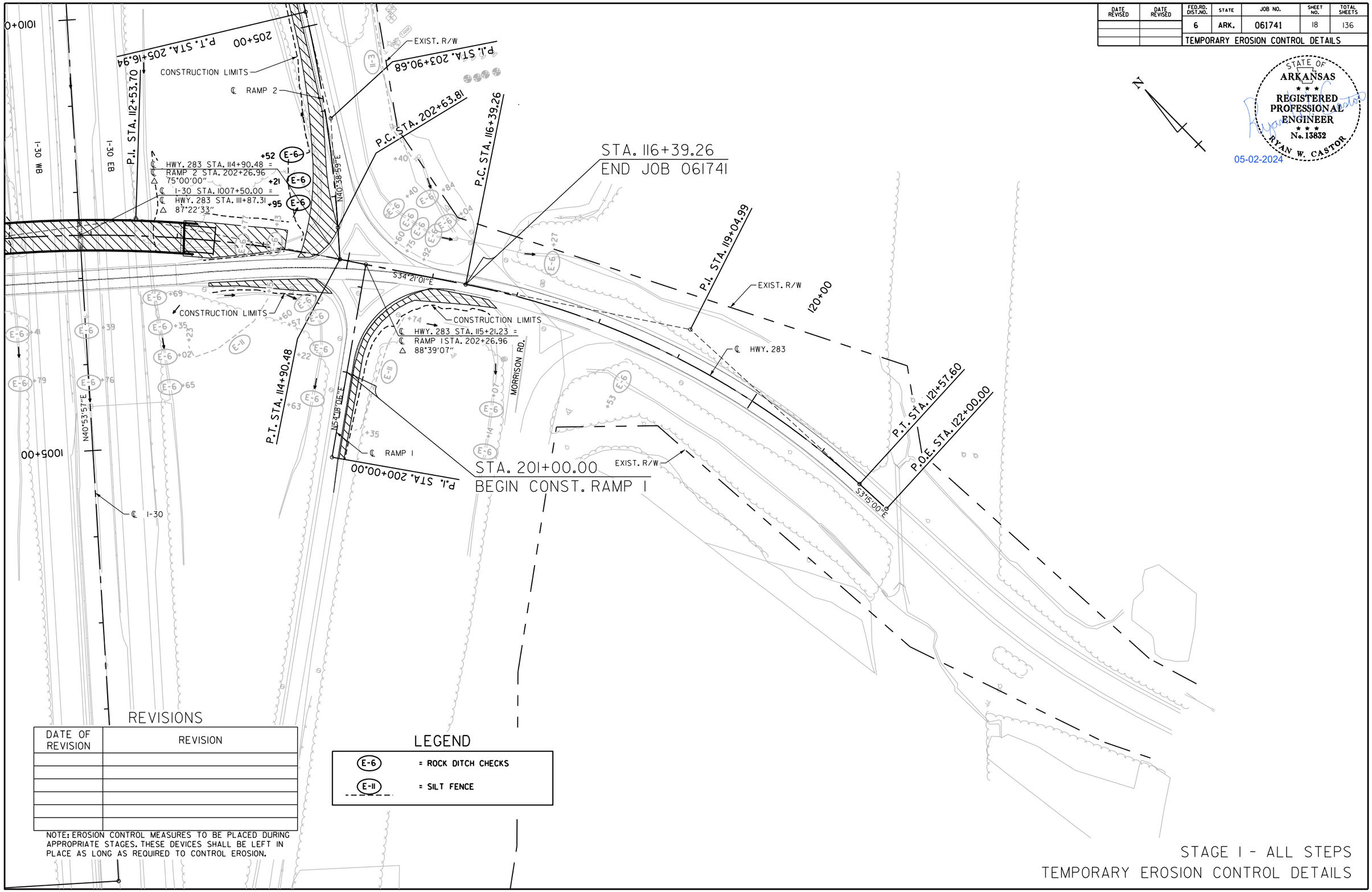

REVISIONS

DATE OF REVISION	REVISION

NOTE: EROSION CONTROL MEASURES TO BE PLACED DURING APPROPRIATE STAGES. THESE DEVICES SHALL BE LEFT IN PLACE AS LONG AS REQUIRED TO CONTROL EROSION.

LEGEND

E-6	= ROCK DITCH CHECKS
E-11	= SILT FENCE

STAGE 1 - ALL STEPS
TEMPORARY EROSION CONTROL DETAILS

5/2/2024
2:43:32 PM
...\EC\r061741_EC_02.dgn

DATE REVISED	DATE REVISED	FED.RD. DIST.NO.	STATE	JOB NO.	SHEET NO.	TOTAL SHEETS
		6	ARK.	061741	19	136
		TEMPORARY EROSION CONTROL DETAILS				

STATE OF ARKANSAS
REGISTERED PROFESSIONAL ENGINEER
No. 13832
RYAN W. CASTOR
05-02-2024

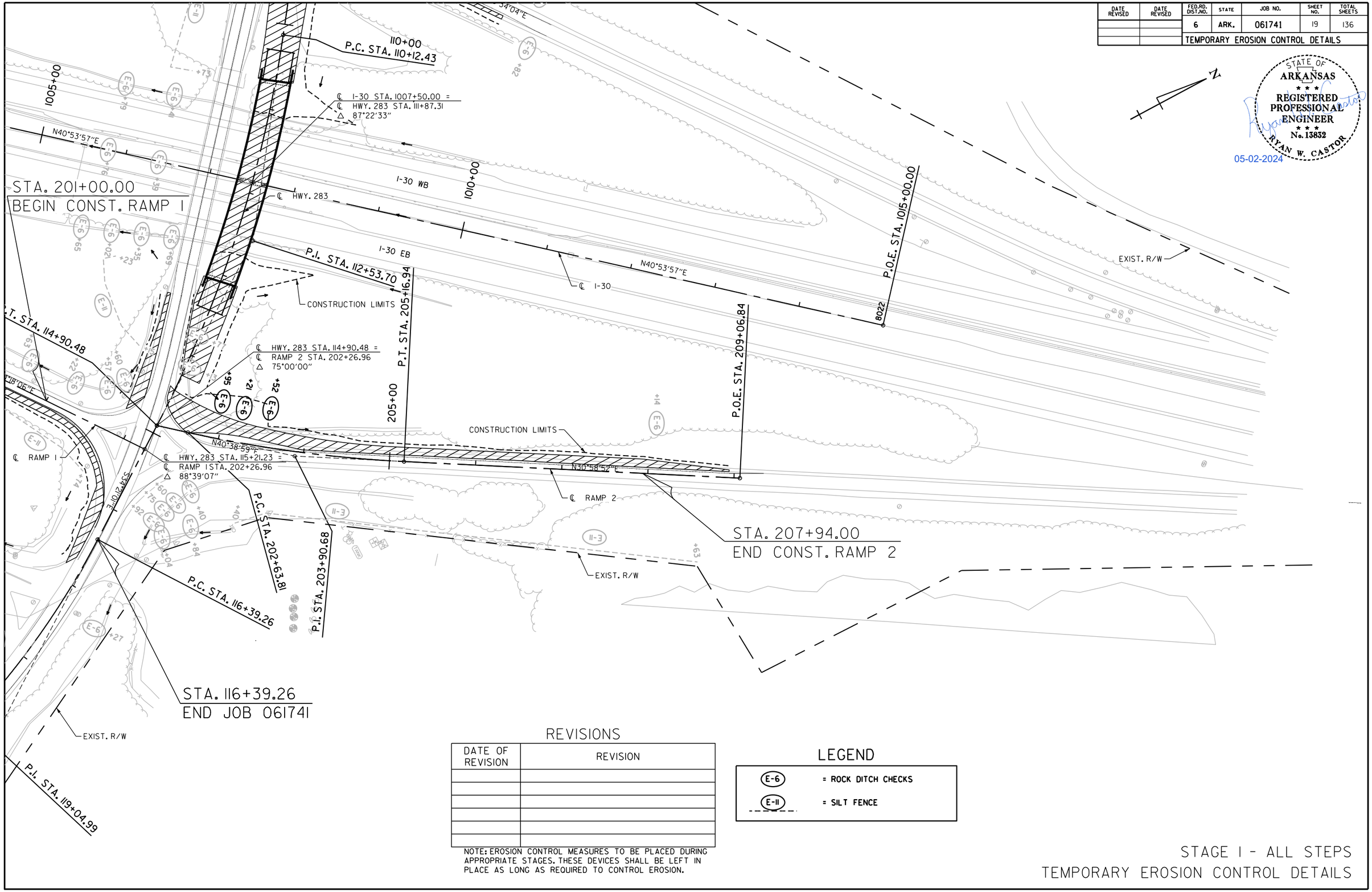

REVISIONS

DATE OF REVISION	REVISION

NOTE: EROSION CONTROL MEASURES TO BE PLACED DURING APPROPRIATE STAGES. THESE DEVICES SHALL BE LEFT IN PLACE AS LONG AS REQUIRED TO CONTROL EROSION.

LEGEND

E-6	= ROCK DITCH CHECKS
E-11	= SILT FENCE

STAGE 1 - ALL STEPS
TEMPORARY EROSION CONTROL DETAILS

5/2/2024
2:41:38 PM
...\ECI-061741_EC_03.dgn

DATE REVISED	DATE REVISED	FED.RD. DIST.NO.	STATE	JOB NO.	SHEET NO.	TOTAL SHEETS
		6	ARK.	061741	20	136
		TEMPORARY EROSION CONTROL DETAILS				

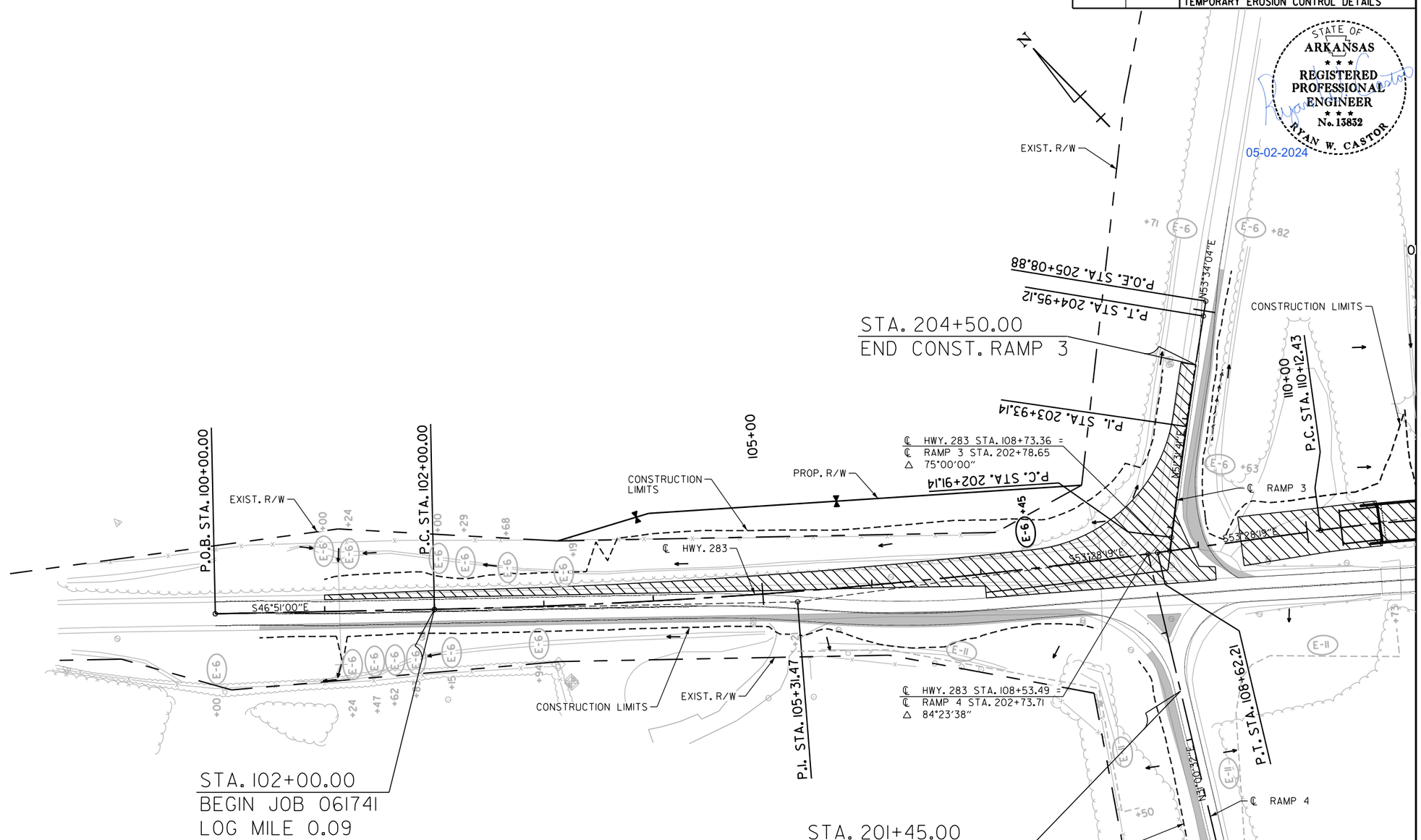

REVISIONS

DATE OF REVISION	REVISION

NOTE: EROSION CONTROL MEASURES TO BE PLACED DURING APPROPRIATE STAGES. THESE DEVICES SHALL BE LEFT IN PLACE AS LONG AS REQUIRED TO CONTROL EROSION.

LEGEND

E-6	= ROCK DITCH CHECKS
E-11	= SILT FENCE

STAGE 2 - STEP 1 CONSTRUCTION AREAS ARE SHOWN IN THE PLAN VIEW, BUT THE DEPICTED EROSION CONTROL MEASURES SHALL BE MAINTAINED FOR ALL STAGE 2 STEPS.

STAGE 2 - ALL STEPS
TEMPORARY EROSION CONTROL DETAILS

5/2/2024
2:24:43 PM
...\EC\r061741_EC_04.dgn

DATE REVISED	DATE REVISED	FED.RD. DIST.NO.	STATE	JOB NO.	SHEET NO.	TOTAL SHEETS
		6	ARK.	061741	21	136
		TEMPORARY EROSION CONTROL DETAILS				

STATE OF ARKANSAS
REGISTERED PROFESSIONAL ENGINEER
No. 13832
RYAN W. CASTOR
05-02-2024

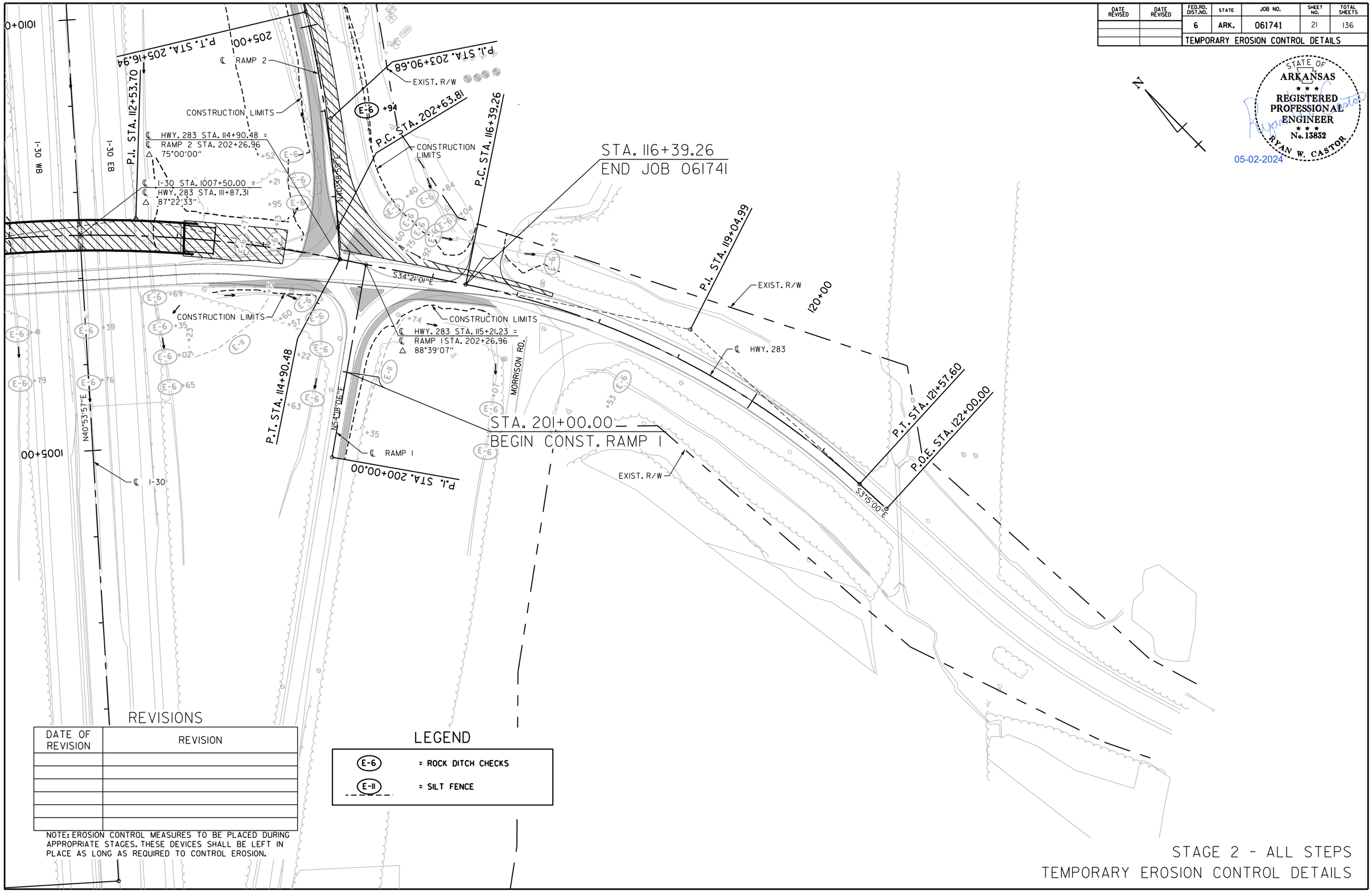

REVISIONS

DATE OF REVISION	REVISION

NOTE: EROSION CONTROL MEASURES TO BE PLACED DURING APPROPRIATE STAGES. THESE DEVICES SHALL BE LEFT IN PLACE AS LONG AS REQUIRED TO CONTROL EROSION.

LEGEND

E-6	= ROCK DITCH CHECKS
E-11	= SILT FENCE

STAGE 2 - ALL STEPS
TEMPORARY EROSION CONTROL DETAILS

5/2/2024
2:41:09 PM
...\EC\r061741_EC_05.dgn

DATE REVISED	DATE REVISED	FED.RD. DIST.NO.	STATE	JOB NO.	SHEET NO.	TOTAL SHEETS
		6	ARK.	061741	22	136
		TEMPORARY EROSION CONTROL DETAILS				

STATE OF ARKANSAS
REGISTERED PROFESSIONAL ENGINEER
No. 13832
RYAN W. CASTOR
05-02-2024

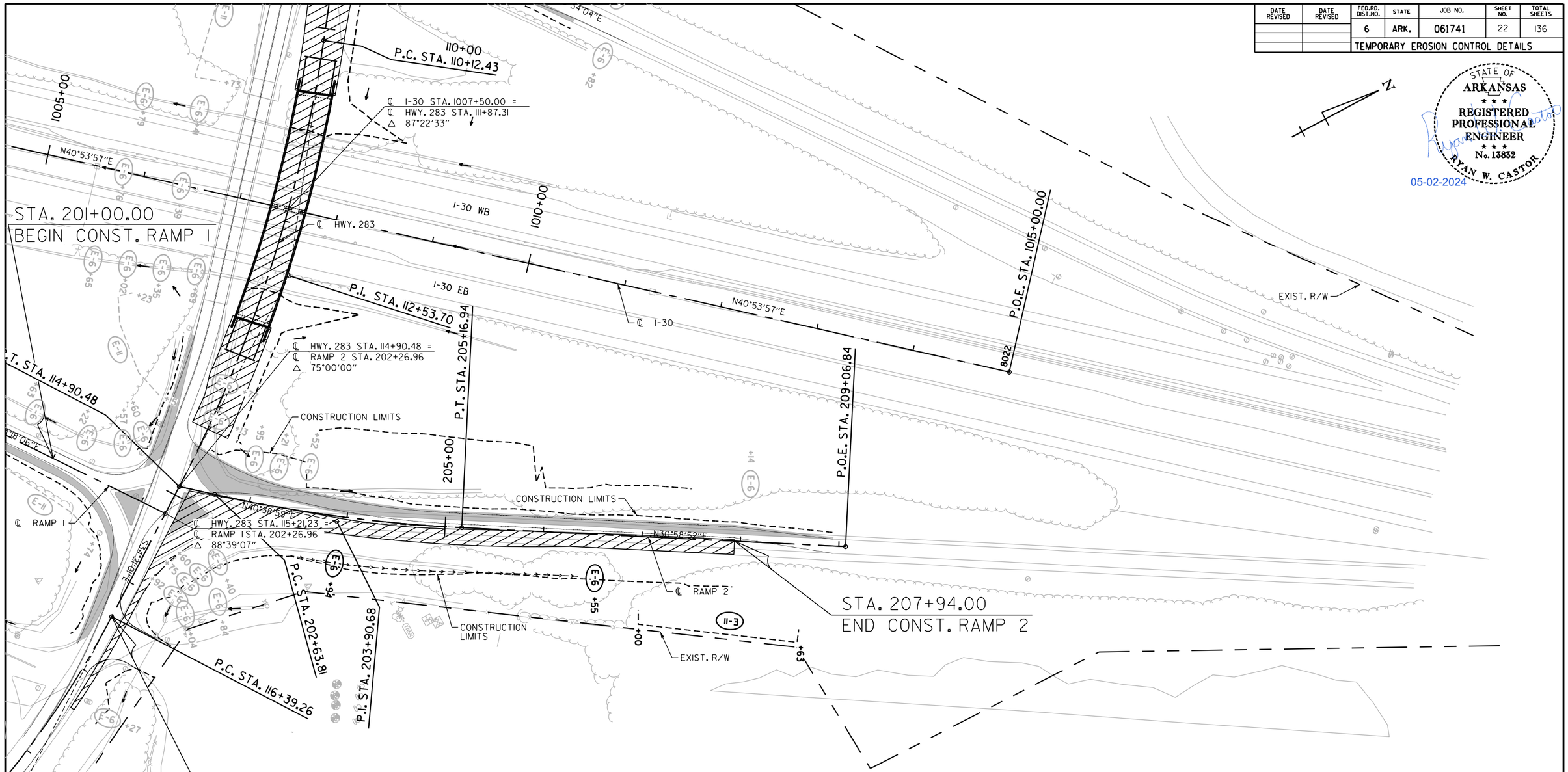

REVISIONS

DATE OF REVISION	REVISION

NOTE: EROSION CONTROL MEASURES TO BE PLACED DURING APPROPRIATE STAGES. THESE DEVICES SHALL BE LEFT IN PLACE AS LONG AS REQUIRED TO CONTROL EROSION.

LEGEND

E-6	= ROCK DITCH CHECKS
E-11	= SILT FENCE

STAGE 2 - ALL STEPS
TEMPORARY EROSION CONTROL DETAILS

5/2/2024
2:41:55 PM
...\EC\r061741_EC_06.dgn

DATE REVISED	DATE REVISED	FED.RD. DIST.NO.	STATE	JOB NO.	SHEET NO.	TOTAL SHEETS
		6	ARK.	061741	23	136
		TEMPORARY EROSION CONTROL DETAILS				

STATE OF ARKANSAS
REGISTERED PROFESSIONAL ENGINEER
No. 13832
RYAN W. CASTOR
05-02-2024

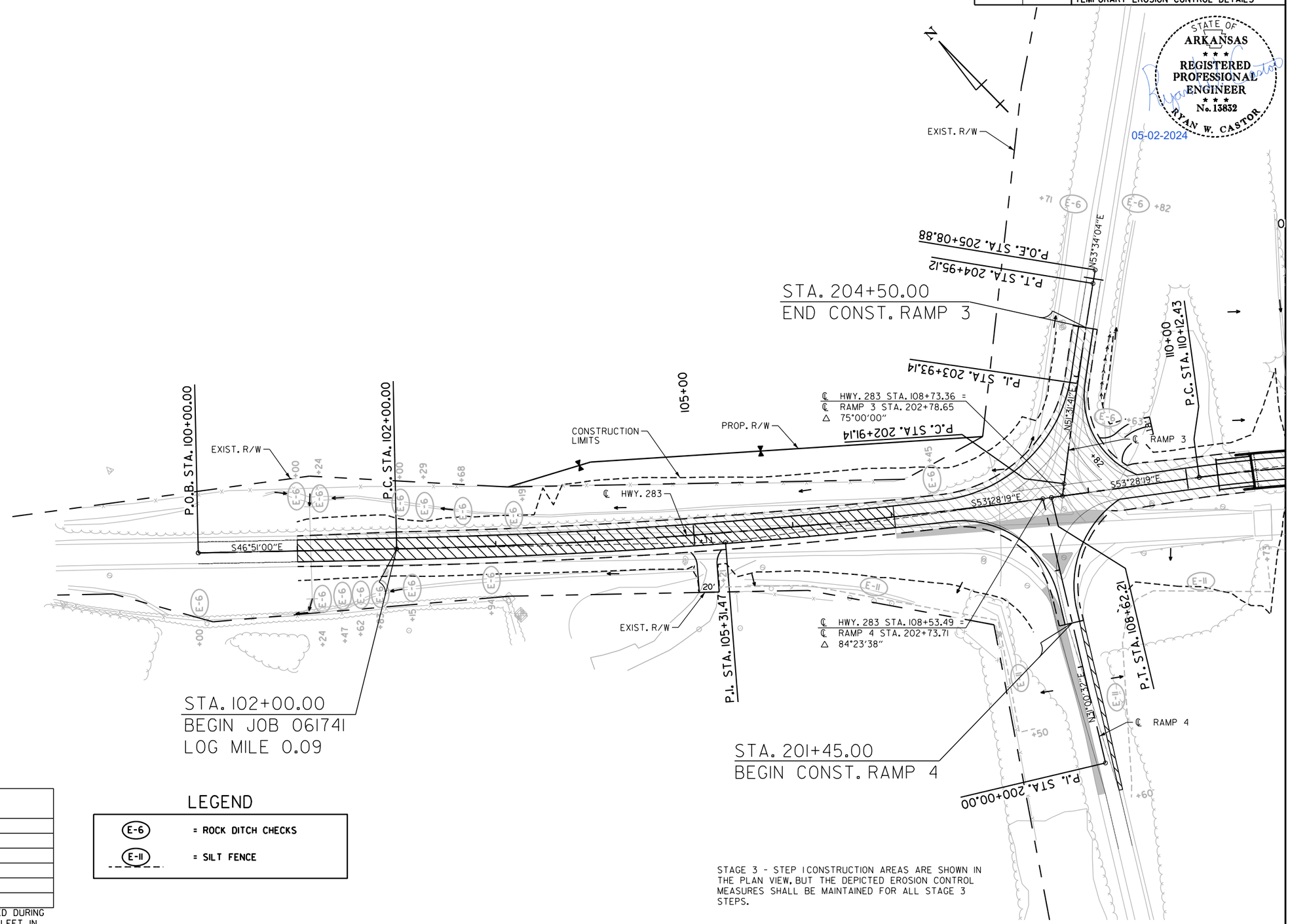

REVISIONS

DATE OF REVISION	REVISION

NOTE: EROSION CONTROL MEASURES TO BE PLACED DURING APPROPRIATE STAGES. THESE DEVICES SHALL BE LEFT IN PLACE AS LONG AS REQUIRED TO CONTROL EROSION.

LEGEND

E-6	= ROCK DITCH CHECKS
E-11	= SILT FENCE

STAGE 3 - STEP 1 CONSTRUCTION AREAS ARE SHOWN IN THE PLAN VIEW, BUT THE DEPICTED EROSION CONTROL MEASURES SHALL BE MAINTAINED FOR ALL STAGE 3 STEPS.

STAGE 3 - ALL STEPS
TEMPORARY EROSION CONTROL DETAILS

5/2/2024
2:42:02 PM
...\EC-061741.EC_07.dgn

DATE REVISED	DATE REVISED	FED.RD. DIST.NO.	STATE	JOB NO.	SHEET NO.	TOTAL SHEETS
		6	ARK.	061741	24	136
		TEMPORARY EROSION CONTROL DETAILS				

STATE OF ARKANSAS
REGISTERED PROFESSIONAL ENGINEER
No. 13832
RYAN W. CASTOR
05-02-2024

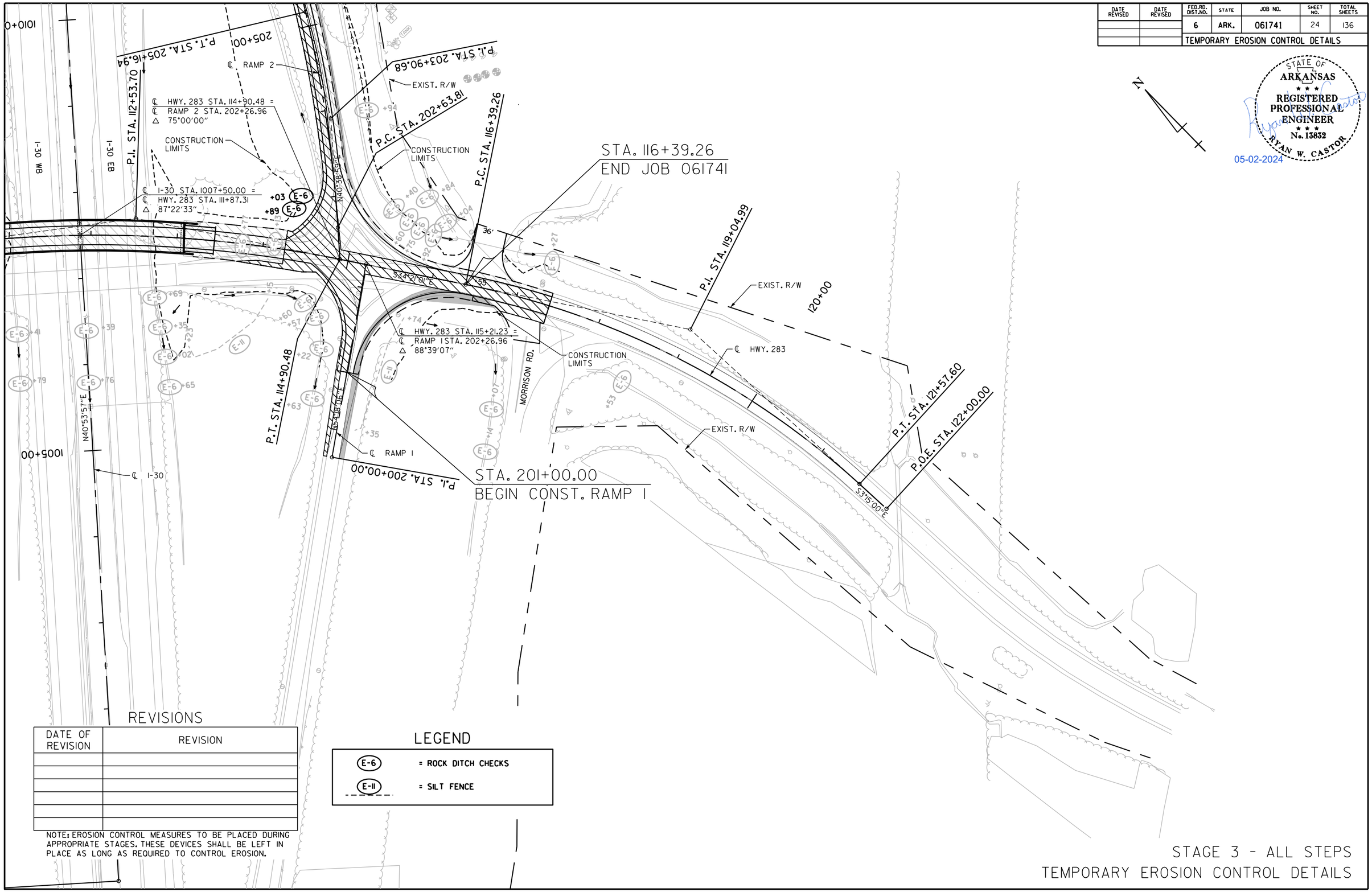

REVISIONS

DATE OF REVISION	REVISION

NOTE: EROSION CONTROL MEASURES TO BE PLACED DURING APPROPRIATE STAGES. THESE DEVICES SHALL BE LEFT IN PLACE AS LONG AS REQUIRED TO CONTROL EROSION.

LEGEND

E-6	= ROCK DITCH CHECKS
E-11	= SILT FENCE

STAGE 3 - ALL STEPS
TEMPORARY EROSION CONTROL DETAILS

5/2/2024
2:42:08 PM
...\EC\r061741_EC_08.dgn

DATE REVISED	DATE REVISED	FED.RD. DIST.NO.	STATE	JOB NO.	SHEET NO.	TOTAL SHEETS
		6	ARK.	061741	25	136
		TEMPORARY EROSION CONTROL DETAILS				

STATE OF ARKANSAS
REGISTERED PROFESSIONAL ENGINEER
No. 13832
RYAN W. CASTOR
05-02-2024

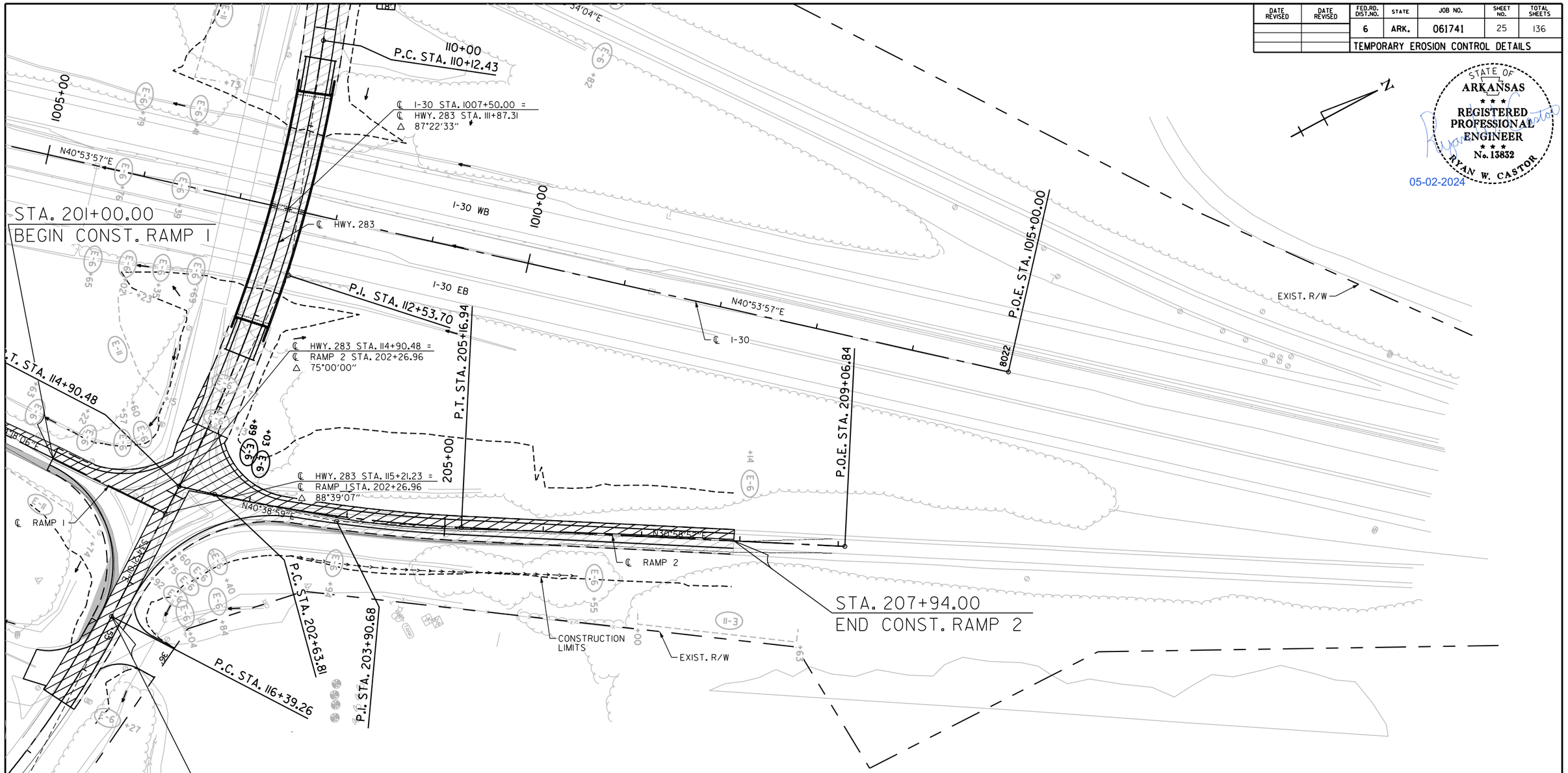

REVISIONS

DATE OF REVISION	REVISION

NOTE: EROSION CONTROL MEASURES TO BE PLACED DURING APPROPRIATE STAGES. THESE DEVICES SHALL BE LEFT IN PLACE AS LONG AS REQUIRED TO CONTROL EROSION.

LEGEND

E-6	= ROCK DITCH CHECKS
E-11	= SILT FENCE

STAGE 3 - ALL STEPS
TEMPORARY EROSION CONTROL DETAILS

5/2/2024
2:42:25 PM
...\EC\r061741_EC_09.dgn

DATE REVISED	DATE REVISED	FED.RD. DIST.NO.	STATE	JOB NO.	SHEET NO.	TOTAL SHEETS
		6	ARK.	061741	26	136
		MAINTENANCE OF TRAFFIC DETAILS				

SEQUENCE OF CONSTRUCTION

STAGE ISTEP I:
- PLACE ADVANCE WARNING SIGNAGE (TO BE MAINTAINED IN ALL STAGES).
- SET TEMPORARY PRECAST CONCRETE BARRIER AND TEMPORARY TRAFFIC CONTROL DEVICES.
- CONSTRUCT TEMPORARY WIDENING.
- START CONSTRUCTION OF HWY. 283 ULTIMATE PAVEMENT AND BRIDGE STRUCTURE.

STAGE ISTEP 2:
- RELOCATE TEMPORARY TRAFFIC CONTROL DEVICES.
- REMOVE EXISTING ISLANDS AND CONSTRUCT TEMPORARY PAVEMENT.
- CONTINUE CONSTRUCTION OF HWY. 283 ULTIMATE PAVEMENT AND BRIDGE STRUCTURE.

STAGE 2 STEP I:
- REMOVE EXISTING GUARDRAIL ON NORTH SIDE OF HWY. 283.
- INSTALL TEMPORARY PRECAST CONCRETE BARRIER AND RELOCATE TEMPORARY TRAFFIC CONTROL DEVICES.
- SHIFT HWY. 283, RAMP 2 & RAMP 3 TRAFFIC ONTO TEMPORARY PAVEMENT.
- CONSTRUCT NOTCH AND WIDEN ON THE EAST SIDE OF RAMP 2 AND ON THE NORTH SIDE OF HWY. 283 FROM RAMP 3 TO THE WEST.
- CONSTRUCT OVERLAY AND GRADE RAISE AS NECESSARY ON THE EAST HALF OF RAMP 2 AND ON THE WEST HALF OF RAMP 3.

STAGE 2 STEP 2:
- RELOCATE TEMPORARY TRAFFIC CONTROL DEVICES.
- SHIFT RAMP 3 TRAFFIC WEST TO NEWLY CONSTRUCTED PAVEMENT.
- CONSTRUCT NOTCH AND WIDEN ON THE EAST SIDE OF RAMP 3.
- CONSTRUCT OVERLAY AND GRADE RAISE AS NECESSARY ON THE EAST HALF OF RAMP 3.
- FINISH CONSTRUCTION OF THE EAST SIDE OF RAMP 2 AND THE HWY. 283 BRIDGE STRUCTURE AND APPROACH PAVEMENT.
- CONSTRUCT NOTCH AND WIDEN ON I-30.
- INSTALL GUARDRAIL AND WRSF ALONG I-30.

STAGE 3 STEP I:
- RELOCATE TEMPORARY PRECAST CONCRETE BARRIER AND TEMPORARY TRAFFIC CONTROL DEVICES.
- REMOVE TEMPORARY PRECAST CONCRETE BARRIER.
- CONSTRUCT OVERLAY AND GRADE RAISE AS NECESSARY ON HWY. 283.
- SHIFT RAMP 3 AND HWY. 283 TRAFFIC TO NEW PAVEMENT AND BRIDGE STRUCTURE.
- CONSTRUCT NOTCH AND WIDEN ON THE WEST SIDE OF RAMP I AND RAMP 2.
- CONSTRUCT OVERLAY AND GRADE RAISE ON THE WEST SIDE OF RAMP I AND RAMP 2.
- CONSTRUCT TEMPORARY WIDENING ON RAMP 4.

STAGE 3 STEP 2:
- RELOCATE TEMPORARY TRAFFIC CONTROL DEVICES.
- SHIFT RAMP 2 TO NEW PAVEMENT.
- CONSTRUCT NOTCH AND WIDEN ON THE EAST SIDE OF RAMP I AND RAMP 4.
- CONSTRUCT OVERLAY AND GRADE RAISE ON THE EAST SIDE OF RAMP 4.

STAGE 3 STEP 3:
- RELOCATE TEMPORARY TRAFFIC CONTROL DEVICES.
- SHIFT RAMP I TO NEW PAVEMENT.
- CONSTRUCT NOTCH AND WIDEN ON THE WEST SIDE OF RAMP 4.
- CONSTRUCT OVERLAY AND GRADE RAISE ON THE WEST SIDE OF RAMP 4.

STAGE 4:
- RELOCATE TEMPORARY TRAFFIC CONTROL DEVICES.
- INSTALL GUARDRAIL ON HWY. 283.
- CONSTRUCT ISLANDS.
- CONSTRUCT REMAINDER OF FINAL LIFT OF ACHM AND MILL AND OVERLAY TRANSITIONS AT BEGIN AND END OF JOB.
- REMOVE TEMPORARY TRAFFIC CONTROL DEVICES AND INSTALL PERMANENT PAVEMENT MARKINGS.

NOTE:
- MILL AND OVERLAY TRANSITIONS MAY BE CONSTRUCTED USING SHORT TERM, ONE LANE CLOSURES.
- FOR SHORT TERM, ONE LANE CLOSURES, SEE ARKANSAS DEPARTMENT OF TRANSPORTATION STANDARD ROADWAY DRAWINGS, STANDARD DRAWING TC-2
- CONTRACTOR SHALL MAINTAIN ACCESS TO DRIVEWAYS AND INTERSECTING STREETS AT ALL TIMES UNLESS APPROVED BY THE ENGINEER.

STATE OF ARKANSAS
REGISTERED PROFESSIONAL ENGINEER
No. 13832
RYAN W. CASTOR
05-02-2024

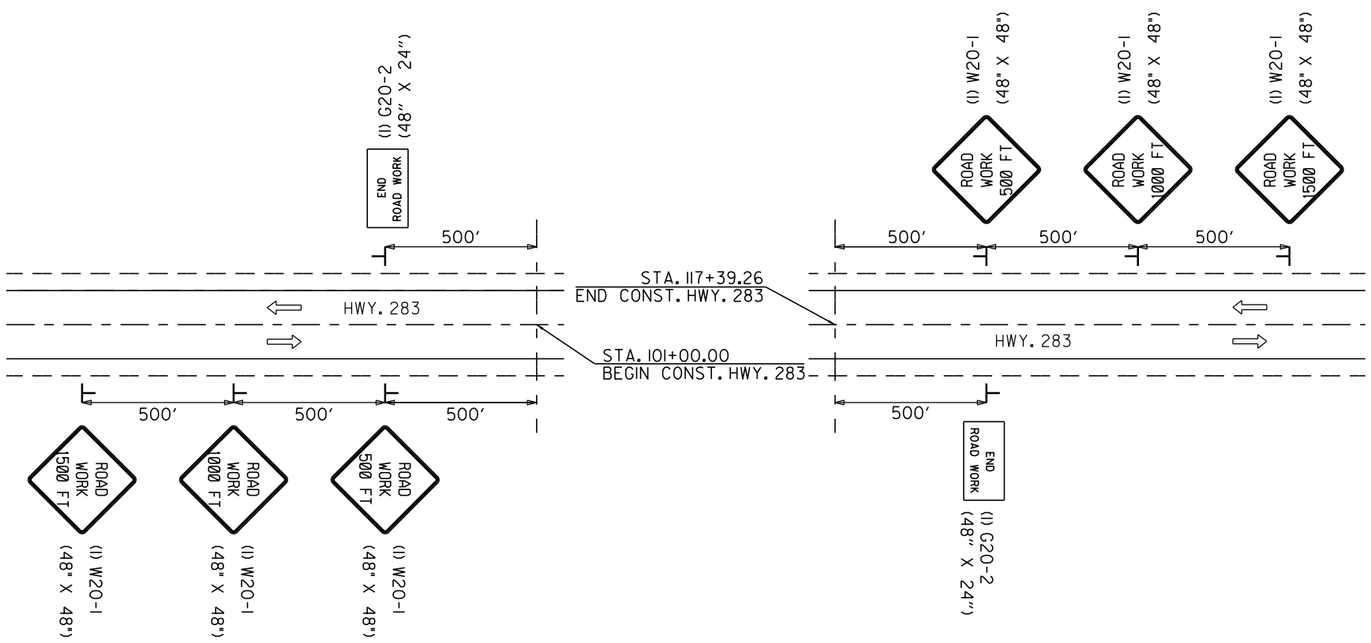

ADVANCE SIGNS AT BEGINNING AND END OF HWY. 283
ALL STAGES

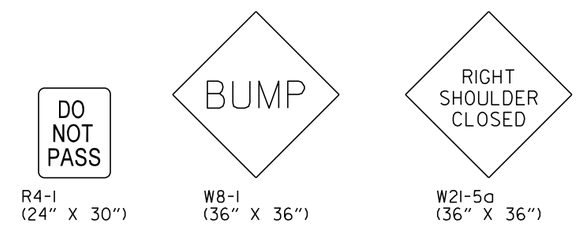

ADVANCE SIGNS
TO BE USED IF AND WHERE DIRECTED BY THE ENGINEER

5/2/2024
2:42:23 PM
...\MOT\r061741_MOT Det 01

DATE REVISED	DATE REVISED	FED.RD. DIST.NO.	STATE	JOB NO.	SHEET NO.	TOTAL SHEETS
		6	ARK.	061741	27	136
		MAINTENANCE OF TRAFFIC DETAILS				

STATE OF ARKANSAS
REGISTERED PROFESSIONAL ENGINEER
No. 13832
RYAN W. CASTOR
05-02-2024

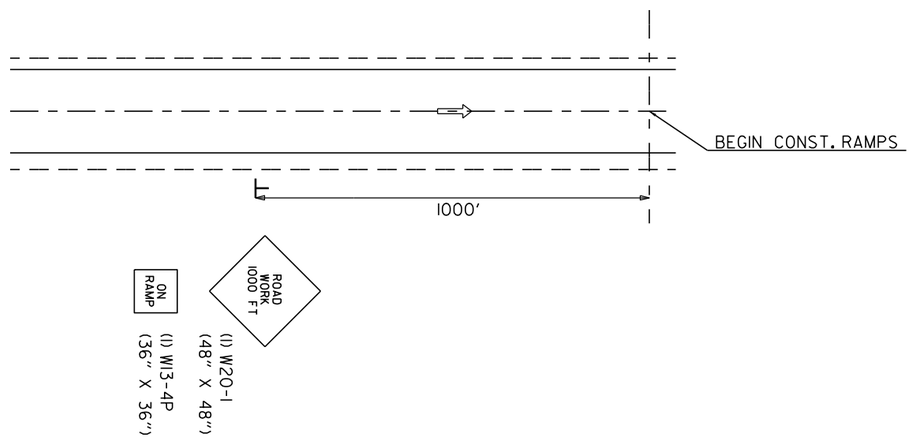

ADVANCE SIGNS AT BEGINNING OF INTERSTATE RAMPS 1 & 3

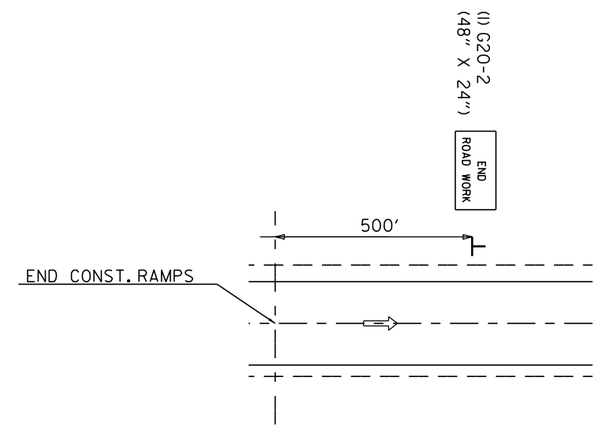

SIGNS AT END OF INTERSTATE RAMPS 2 & 4
ALL STAGES

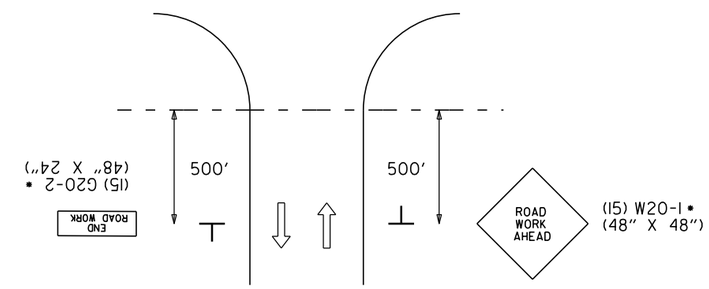

ADVANCE SIGNS AT MORRISON RD.
ALL STAGES

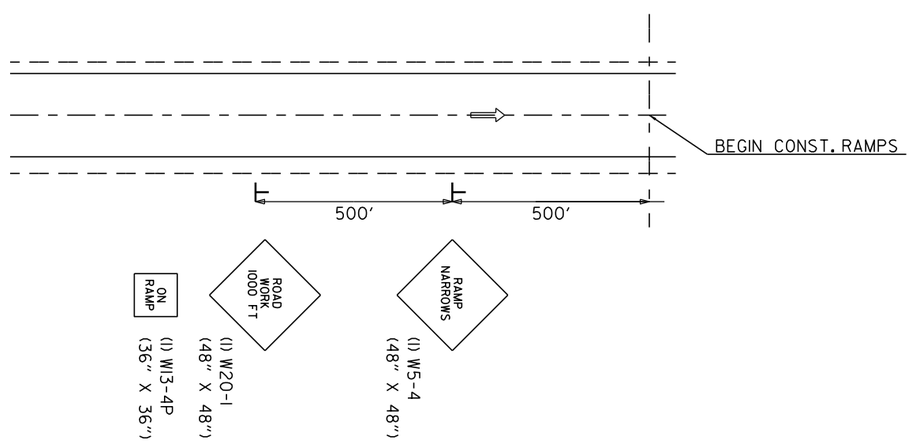

ADVANCE SIGNS AT BEGINNING OF INTERSTATE RAMPS
RAMP 1
STAGE 3 - STEP 1, 2 & 3
RAMP 3
STAGE 1 - STEP 1 & 2
STAGE 2 - STEP 1 & 2

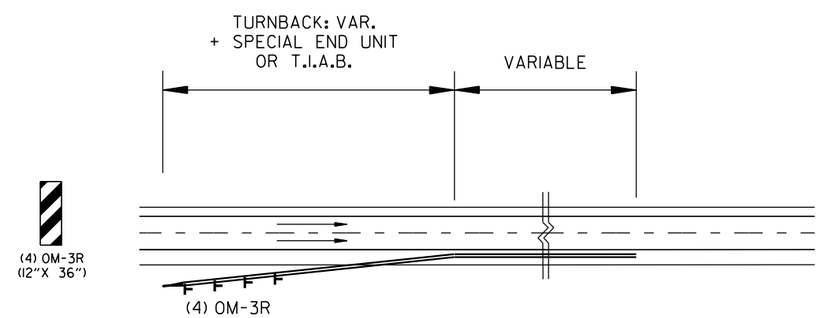

REFER ALSO TO STANDARD DRAWING TC-5 FOR DETAILS OF PLACEMENT OF PCCB TURNBACKS.

NOTE: OM-3R SIGNS SHALL BE EQUALLY SPACED ALONG P.C.C.B. TURNBACK.

DETAIL OF OBJECT MARKERS
AT PRECAST CONCRETE BARRIER TURNBACKS

5/2/2024
2:42:23 PM
...\MOT\F061741_MOT Det 01

DATE REVISED	DATE REVISED	FED.RD. DIST.NO.	STATE	JOB NO.	SHEET NO.	TOTAL SHEETS
		6	ARK.	061741	28	136
		MAINTENANCE OF TRAFFIC DETAILS				

STATE OF ARKANSAS
REGISTERED PROFESSIONAL ENGINEER
No. 13832
RYAN W. CASTOR
05-02-2024

TABLE OF VARIABLES

DESIGN SPEED "A"	B	C	D	E
60	50	720	1100	600
65	55	780	1210	660
70	60	840	1320	720
75	65	900	1430	780

M.S. N.S. = MOBILE SPEED NOTIFICATION SYSTEM

P.R. T.S. = PHOTO RADAR TRAILER SYSTEM

••NOTE: IF NO PAY ITEM FOR A PHOTO RADAR TRAILER SYSTEM IS INCLUDED IN THE CONTRACT DOCUMENTS, ARDOT WILL FURNISH AND PLACE THIS ITEM AS NEEDED AND DETERMINED BY THE ENGINEER.

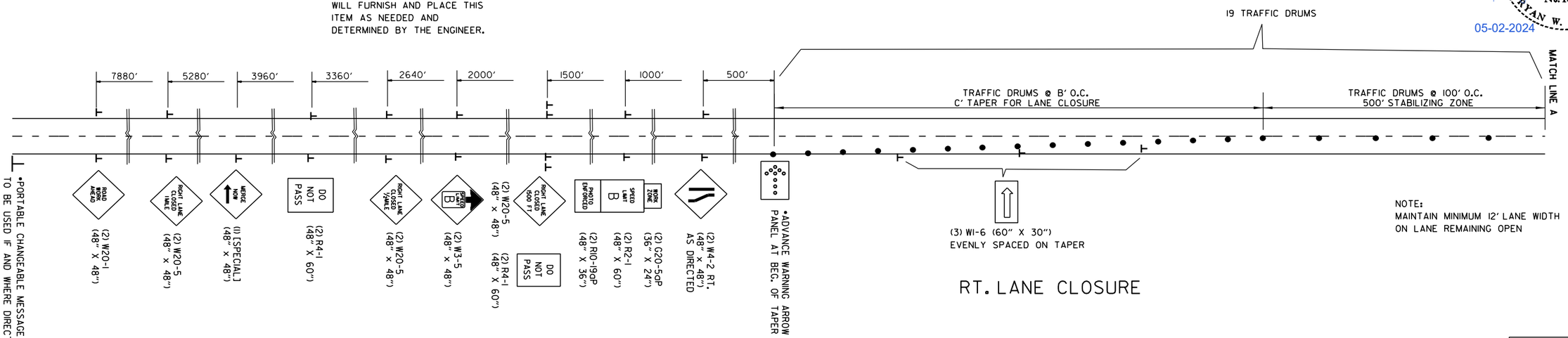

RT. LANE CLOSURE

•PORTABLE CHANGEABLE MESSAGE SIGN TO BE USED IF AND WHERE DIRECTED BY THE ENGINEER

•TO BE PLACED AT MINIMUM OFFSET OF 12′ FROM EDGE OF THROUGH LANE OF TRAFFIC, OR FURTHER IF PRACTICAL.

SPEED LIMIT SIGNS ARE ALSO PROVIDED FOR PLACEMENT PAST ENTRANCE RAMPS WITHIN THE WORK ZONE.

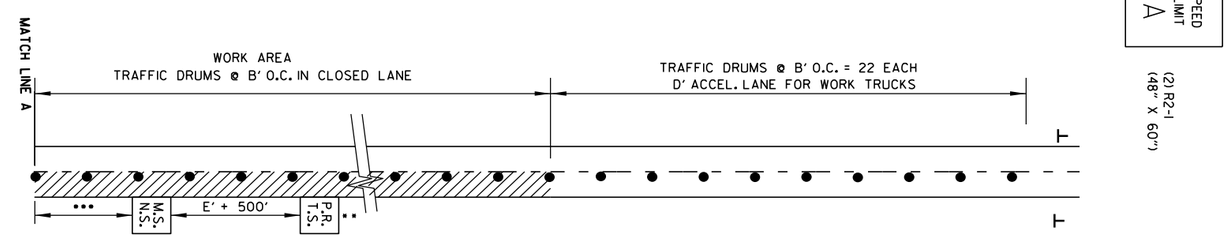

DIVERSION FOR RT. LANE WORK ZONE

•••DISTANCE TO BE DETERMINED BY THE ENGINEER. M.S.N.S. AND P.R.T.S. SHALL BE PLACED WITHIN THE WORK AREA.

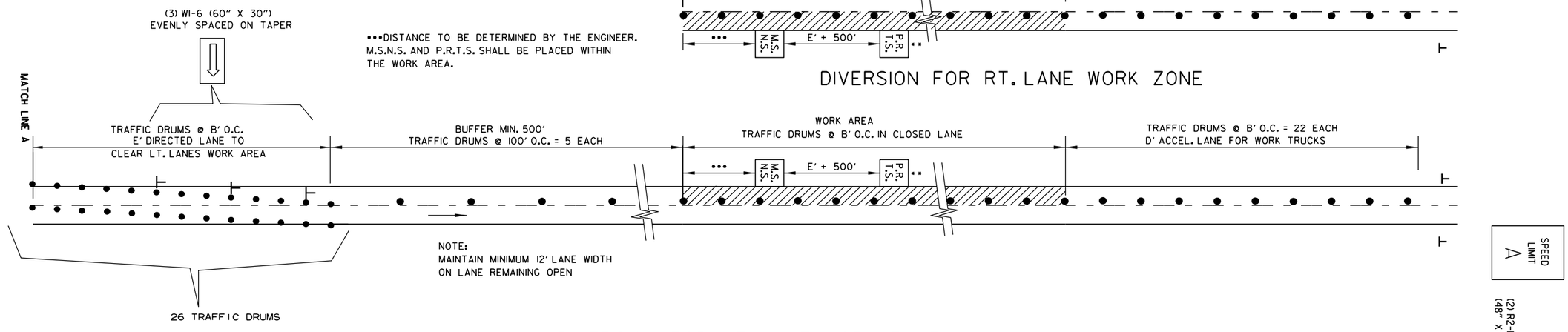

DIVERSION FOR LT. LANE WORK ZONE

5/2/2024
2:42:27 PM
...\MOT\r061741_MOT Det 01

DATE REVISED	DATE REVISED	FED.RD. DIST.NO.	STATE	JOB NO.	SHEET NO.	TOTAL SHEETS
		6	ARK.	061741	29	136
		MAINTENANCE OF TRAFFIC DETAILS				

STATE OF ARKANSAS
REGISTERED PROFESSIONAL ENGINEER
No. 13832
RYAN W. CASTOR
05-02-2024

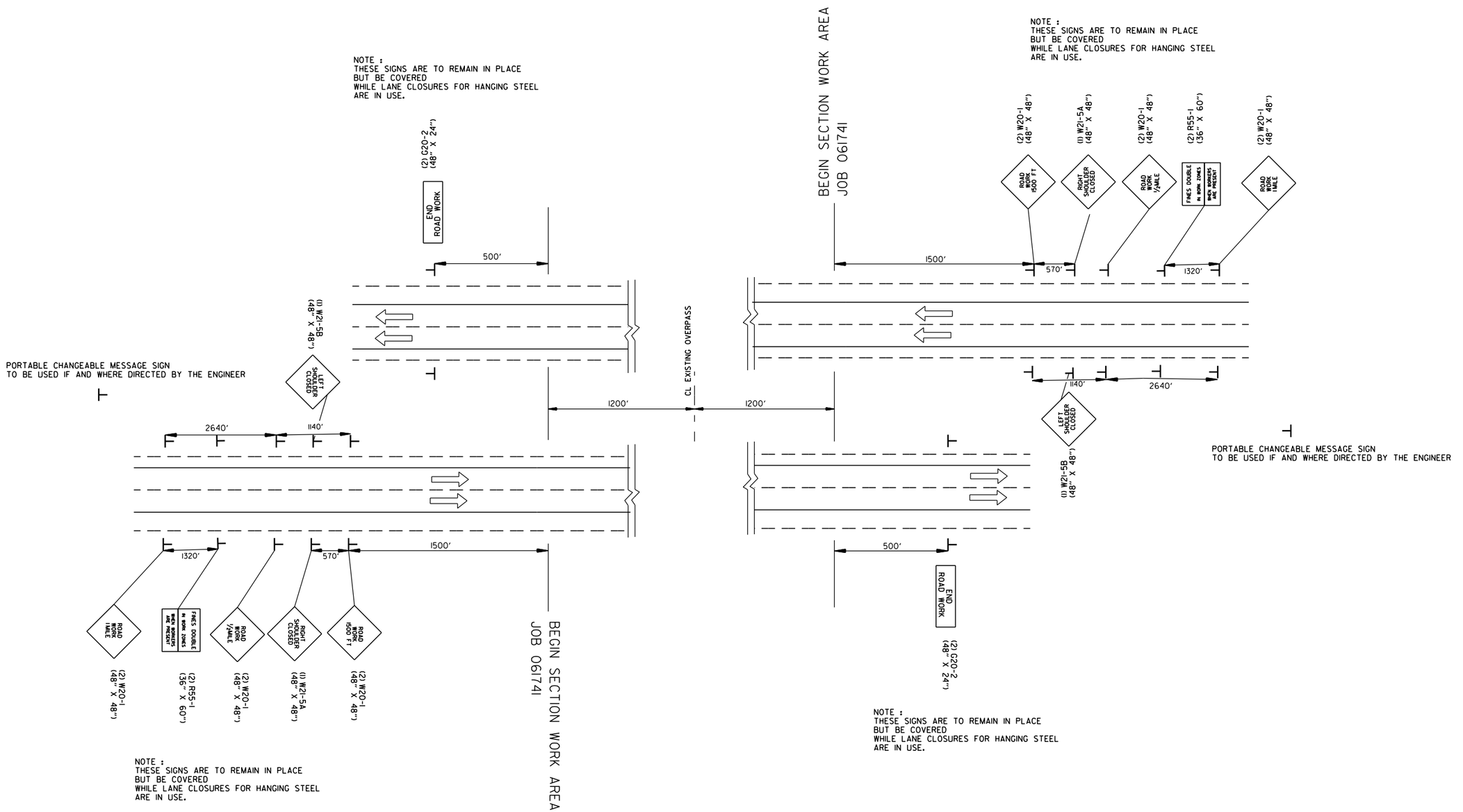

ADVANCE SIGNS AT BEGINNING AND END OF SITES ON I-30
ALL STAGES

5/2/2024
3:16:43 PM
...\MOT\r061741_MOT Det 01

DATE REVISED	DATE REVISED	FED.RD. DIST.NO.	STATE	JOB NO.	SHEET NO.	TOTAL SHEETS
		6	ARK.	061741	30	136
		MAINTENANCE OF TRAFFIC DETAILS				

STATE OF ARKANSAS
REGISTERED PROFESSIONAL ENGINEER
No. 13832
RYAN W. CASTOR
05-02-2024

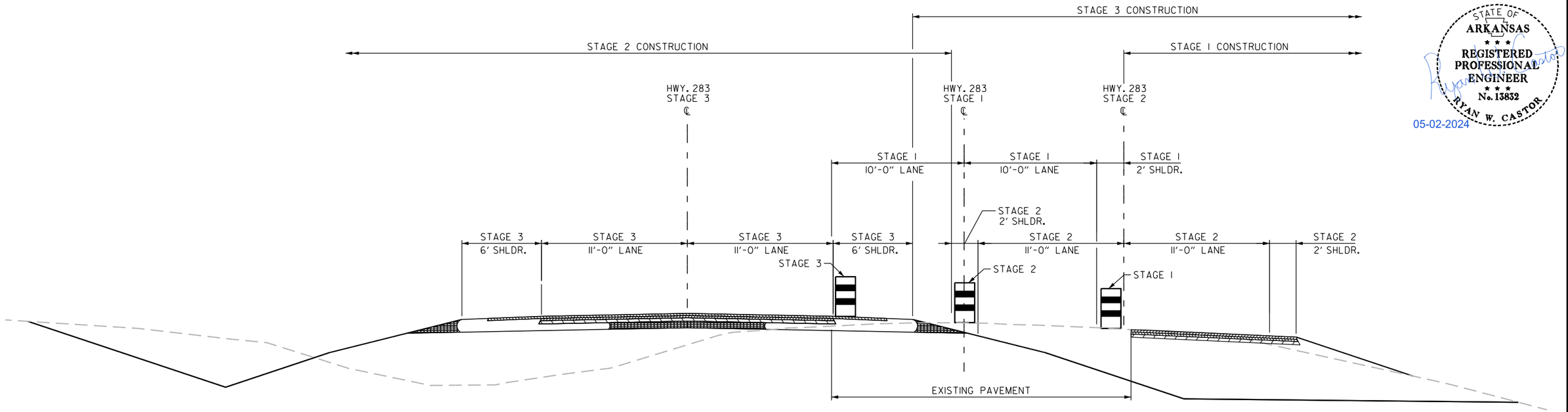

HWY. 283 - FULL DEPTH SECTION

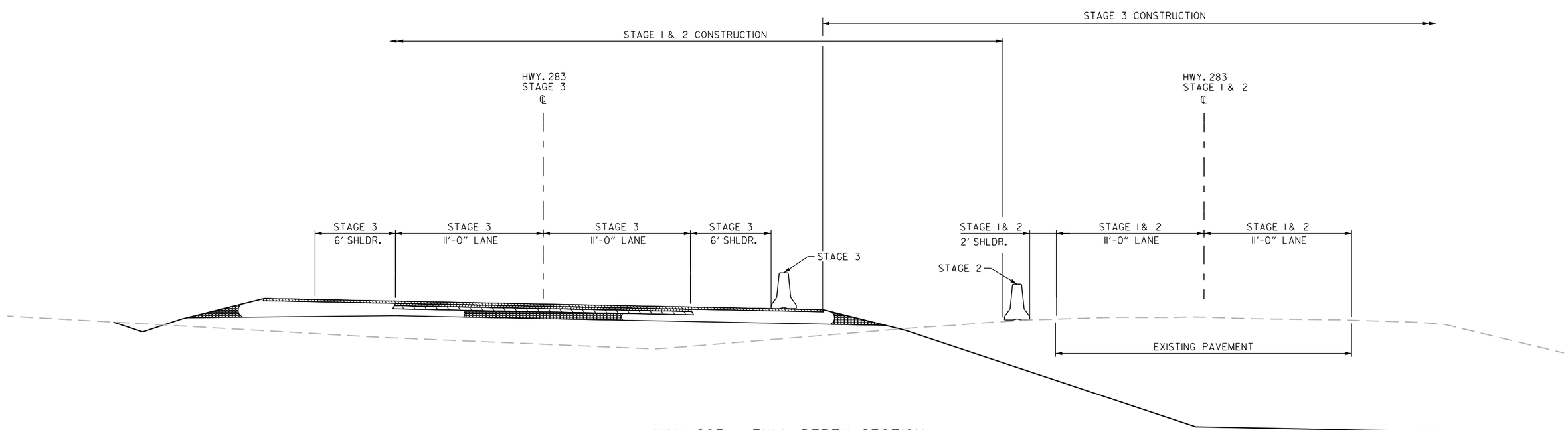

HWY. 283 - FULL DEPTH SECTION
SUPERELEVATION

TYPICAL SECTIONS OF IMPROVEMENT
MAINTENANCE OF TRAFFIC DETAILS

5/2/2024
4:37:46 PM
...\MOT\P061741_MOT TS 01

DATE REVISED	DATE REVISED	FED.RD. DIST.NO.	STATE	JOB NO.	SHEET NO.	TOTAL SHEETS
		6	ARK.	061741	31	136
		MAINTENANCE OF TRAFFIC DETAILS				

STATE OF ARKANSAS
REGISTERED PROFESSIONAL ENGINEER
No. 13832
RYAN W. CASTOR
05-02-2024

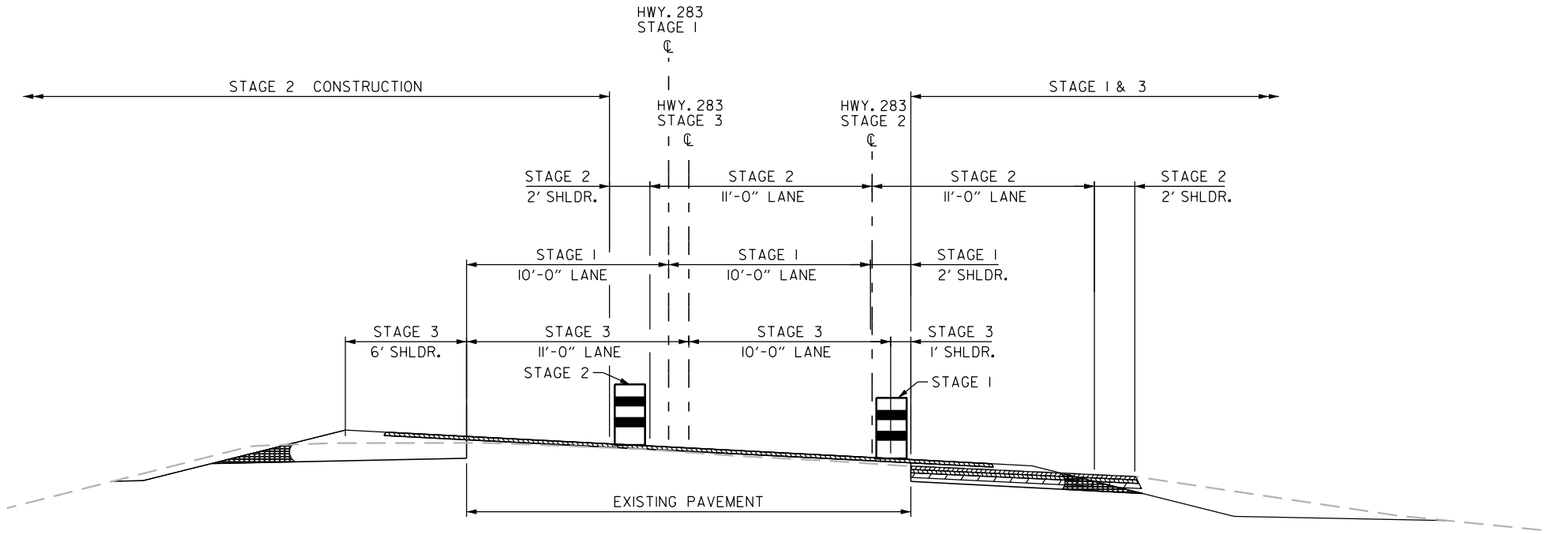

HWY. 283 - NOTCH & OVERLAY SECTION
SUPERELEVATION

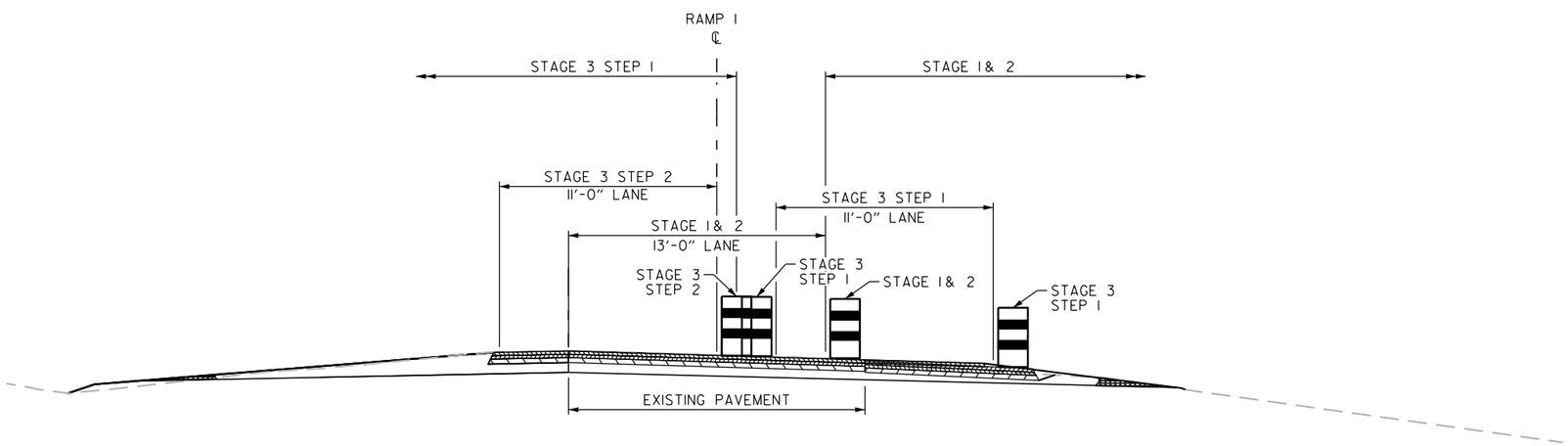

RAMP 1- FULL DEPTH SECTION

TYPICAL SECTIONS OF IMPROVEMENT
MAINTENANCE OF TRAFFIC DETAILS

5/2/2024
3:16:47 PM
...\MOT\r061741_MOT TS 01

DATE REVISED	DATE REVISED	FED.RD. DIST.NO.	STATE	JOB NO.	SHEET NO.	TOTAL SHEETS
		6	ARK.	061741	32	136
		MAINTENANCE OF TRAFFIC DETAILS				

STATE OF ARKANSAS
REGISTERED PROFESSIONAL ENGINEER
No. 13832
RYAN W. CASTOR
05-02-2024

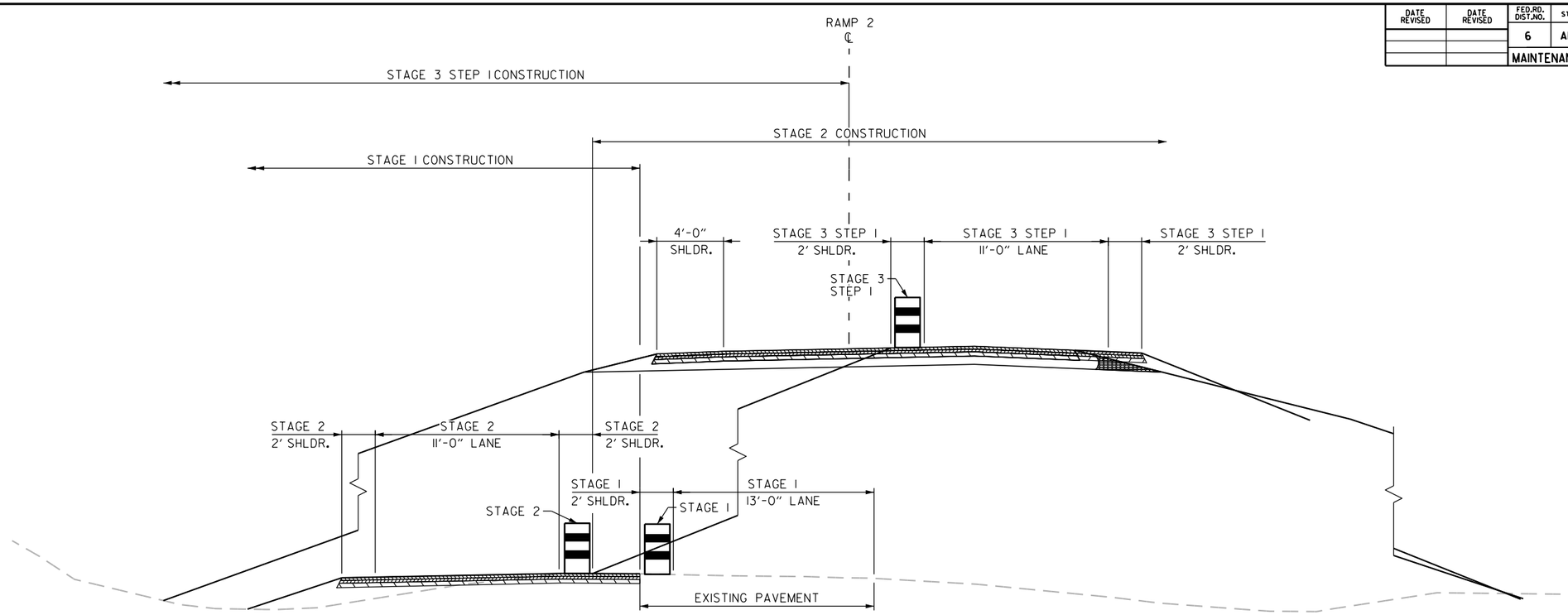

RAMP 2 - FULL DEPTH SECTION

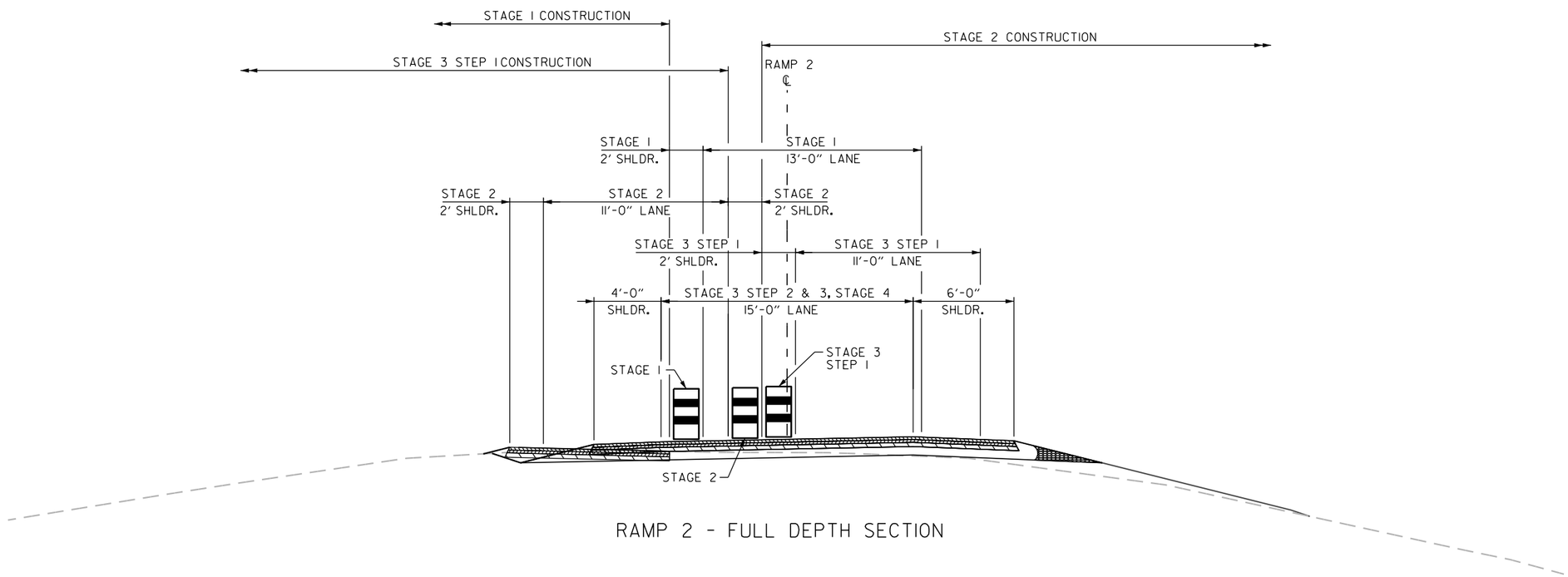

RAMP 2 - FULL DEPTH SECTION

TYPICAL SECTIONS OF IMPROVEMENT
MAINTENANCE OF TRAFFIC DETAILS

5/2/2024
2:42:31 PM
...\MOT\P061741_MOT TS 01

DATE REVISED	DATE REVISED	FED.RD. DIST.NO.	STATE	JOB NO.	SHEET NO.	TOTAL SHEETS
		6	ARK.	061741	33	136
		MAINTENANCE OF TRAFFIC DETAILS				

STATE OF ARKANSAS
REGISTERED PROFESSIONAL ENGINEER
No. 13832
RYAN W. CASTOR
05-02-2024

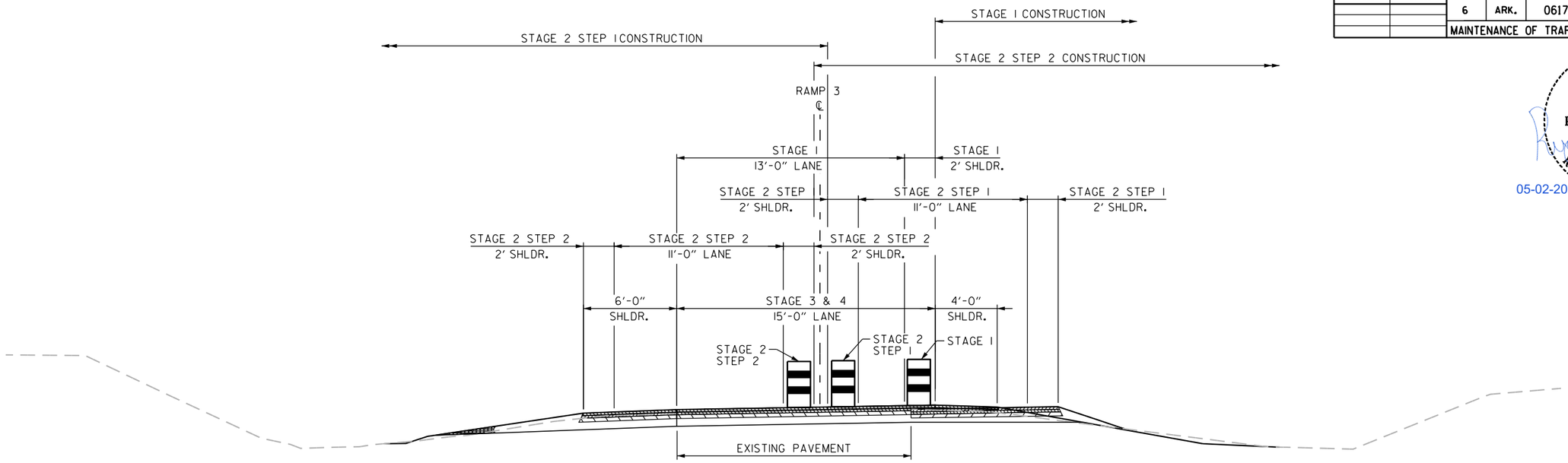

RAMP 3 - FULL DEPTH SECTION

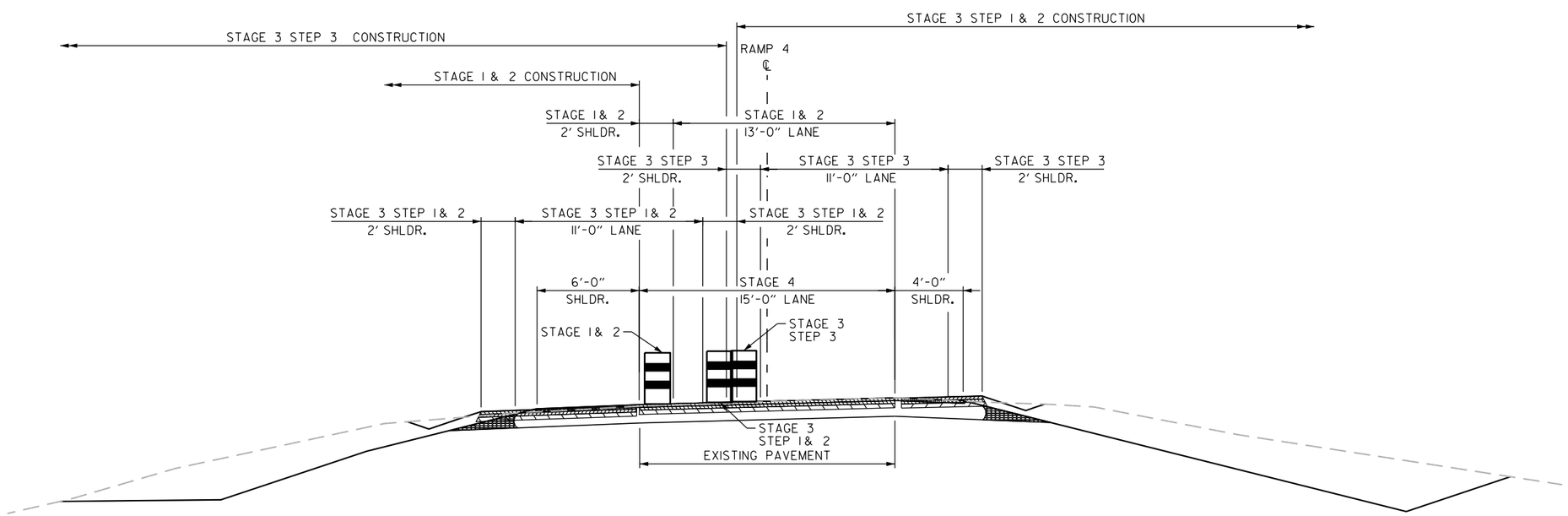

RAMP 4 - FULL DEPTH SECTION

TYPICAL SECTIONS OF IMPROVEMENT
MAINTENANCE OF TRAFFIC DETAILS

5/2/2024
2:42:31 PM
...\MOT\P061741_MOT TS 01

DATE REVISED	DATE REVISED	FED.RD. DIST.NO.	STATE	JOB NO.	SHEET NO.	TOTAL SHEETS
		6	ARK.	061741	34	136
		MAINTENANCE OF TRAFFIC DETAILS				

STATE OF ARKANSAS
REGISTERED PROFESSIONAL ENGINEER
No. 13832
RYAN W. CASTOR
05-02-2024

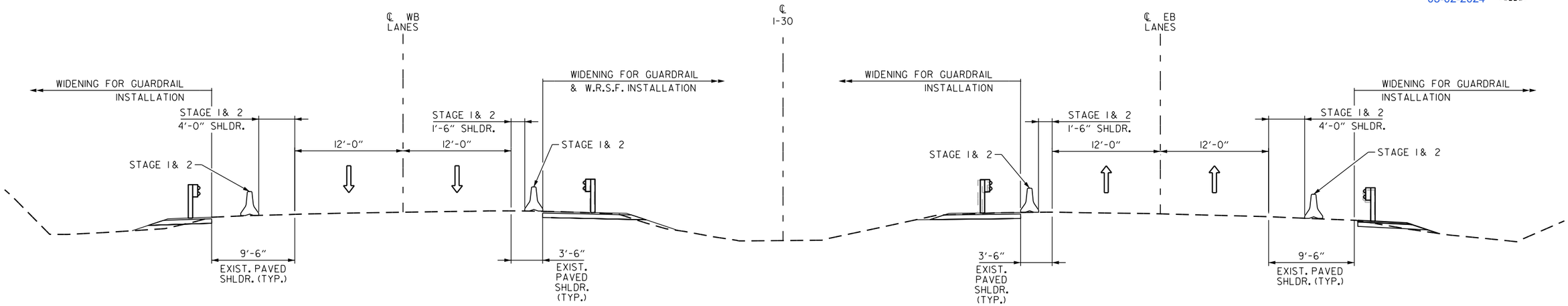

I-30 SECTION FOR GUARDRAIL INSTALLATION

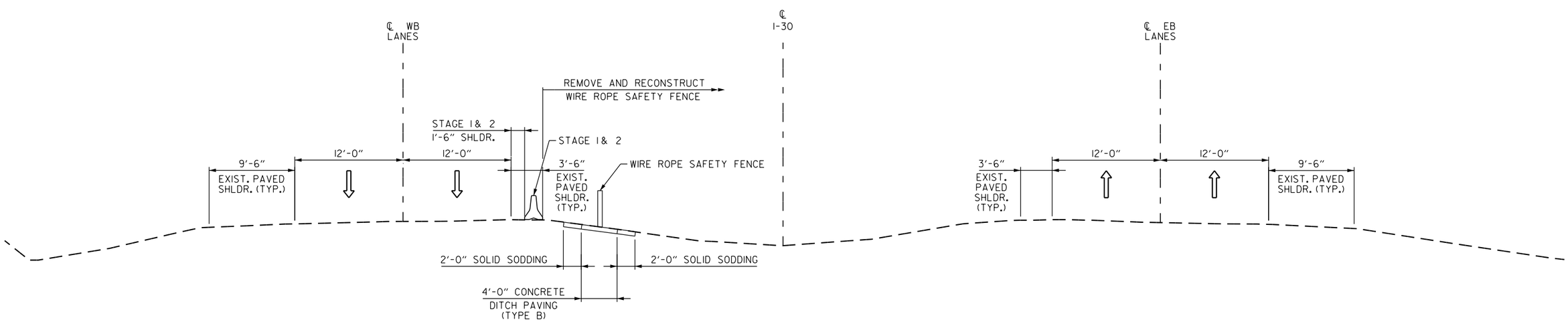

I-30 NORMAL SHOULDER SECTION

TYPICAL SECTIONS OF IMPROVEMENT
MAINTENANCE OF TRAFFIC DETAILS

5/2/2024
2:42:31 PM
...\MOT\P061741_MOT TS 01

DATE REVISED	DATE REVISED	FED.RD. DIST.NO.	STATE	JOB NO.	SHEET NO.	TOTAL SHEETS
		6	ARK.	061741	35	136
		MAINTENANCE OF TRAFFIC DETAILS				

SEQUENCE OF CONSTRUCTION

STAGE I STEP I:
- PLACE ADVANCE WARNING SIGNAGE (TO BE MAINTAINED IN ALL STAGES).
- SET TEMPORARY PRECAST CONCRETE BARRIER AND TEMPORARY TRAFFIC CONTROL DEVICES.
- CONSTRUCT TEMPORARY WIDENING.
- START CONSTRUCTION OF HWY. 283 ULTIMATE PAVEMENT AND BRIDGE STRUCTURE.

LEGEND

STAGE I STEP I WORK ZONE

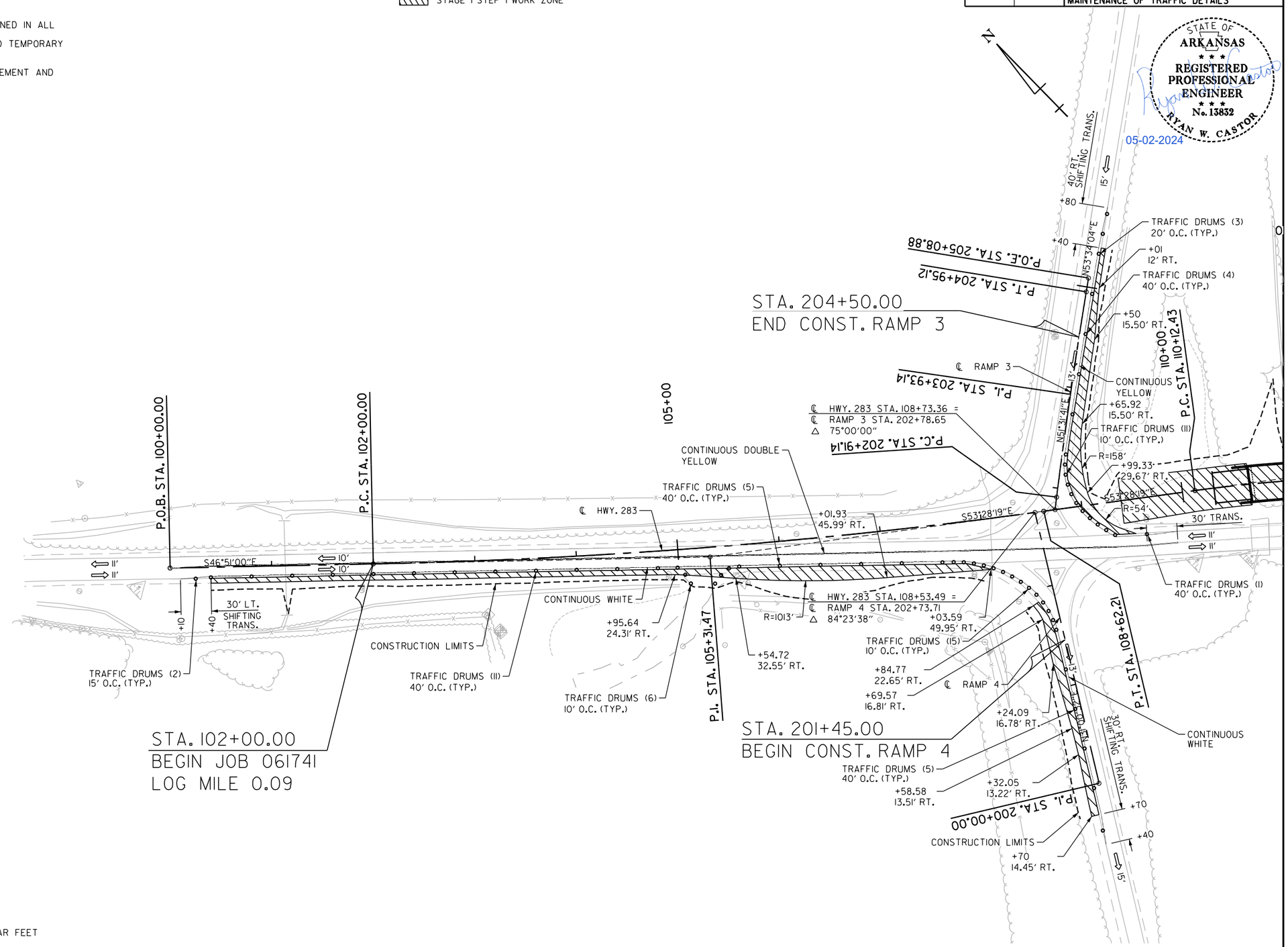

STAGE I STEP I- QUANTITIES

CONSTRUCTION PAVEMENT MARKINGS (YELLOW) = 3,918 LINEAR FEET

CONSTRUCTION PAVEMENT MARKINGS (WHITE) = 1,666 LINEAR FEET

REMOVAL OF PERMANENT PAVEMENT MARKINGS = 5,276 LINEAR FEET

TRAFFIC DRUMS = 120

TEMPORARY PRECAST CONCRETE BARRIER = 3,059 LINEAR FEET

TEMPORARY IMPACT ATTENUATION BARRIER = 1 EACH

SPECIAL END UNIT = 3 EACH

STAGE I - STEP I
MAINTENANCE OF TRAFFIC DETAILS

5/2/2024
2:42:28 PM
...\MOT\r061741_MOT_01.dgn

DATE REVISED	DATE REVISED	FED.RD. DIST.NO.	STATE	JOB NO.	SHEET NO.	TOTAL SHEETS
		6	ARK.	061741	36	136
		MAINTENANCE OF TRAFFIC DETAILS				

LEGEND

STAGE 1 STEP 1 WORK ZONE

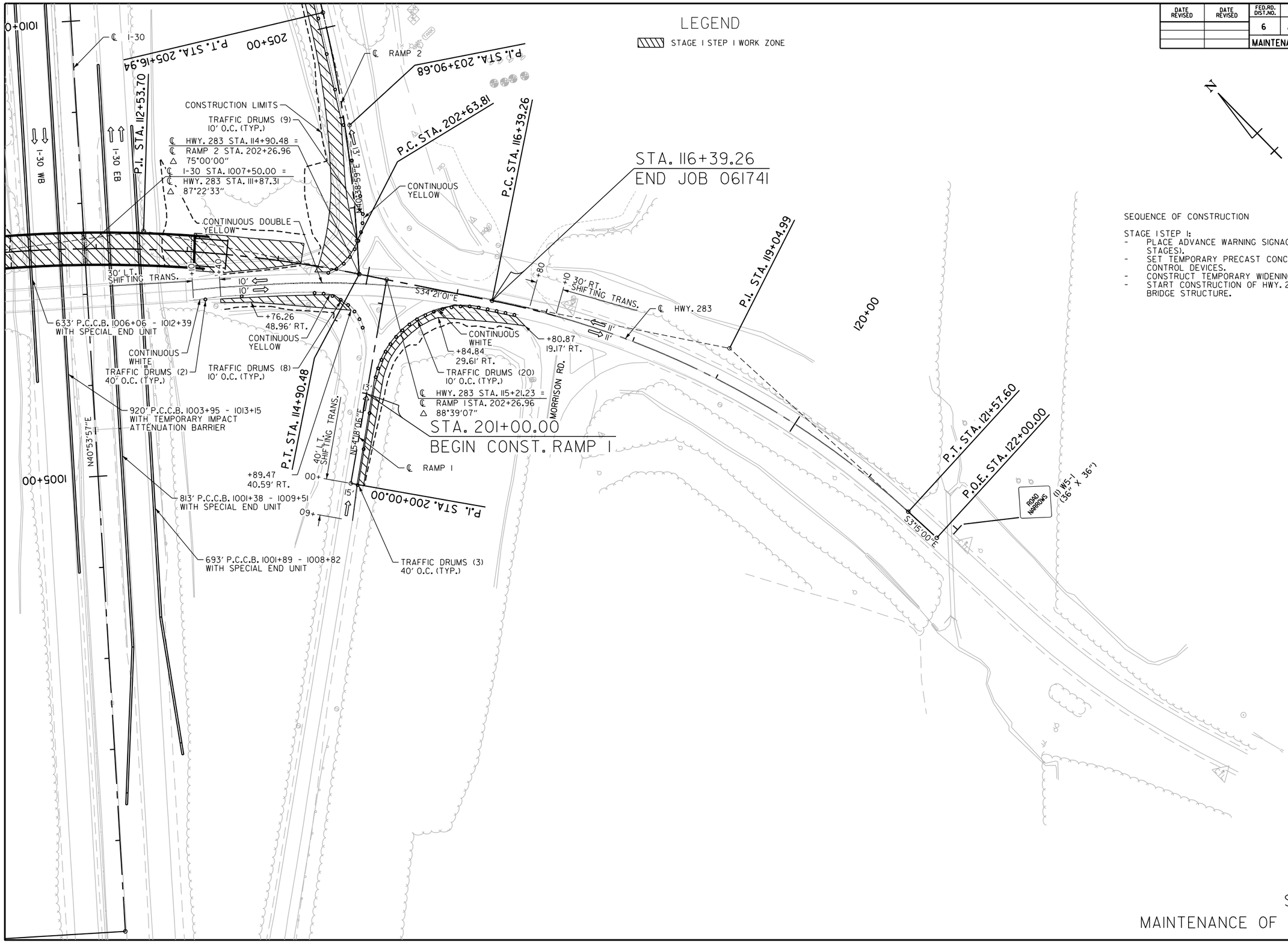

N

STATE OF ARKANSAS
REGISTERED PROFESSIONAL ENGINEER
No. 13832
RYAN W. CASTOR
05-02-2024

SEQUENCE OF CONSTRUCTION

STAGE 1 STEP 1:
- PLACE ADVANCE WARNING SIGNAGE (TO BE MAINTAINED IN ALL STAGES).
- SET TEMPORARY PRECAST CONCRETE BARRIER AND TEMPORARY CONTROL DEVICES.
- CONSTRUCT TEMPORARY WIDENING.
- START CONSTRUCTION OF HWY. 283 ULTIMATE PAVEMENT AND BRIDGE STRUCTURE.

STAGE 1- STEP 1
MAINTENANCE OF TRAFFIC DETAILS

5/2/2024
2:42:47 PM
...\MOT\F061741_MOT_02.dgn

DATE REVISED	DATE REVISED	FED.RD. DIST.NO.	STATE	JOB NO.	SHEET NO.	TOTAL SHEETS
		6	ARK.	061741	37	136
		MAINTENANCE OF TRAFFIC DETAILS				

LEGEND

STAGE 1 STEP 1 WORK ZONE

SEQUENCE OF CONSTRUCTION

STAGE 1 STEP 1:
- PLACE ADVANCE WARNING SIGNAGE (TO BE MAINTAINED IN ALL STAGES).
- SET TEMPORARY PRECAST CONCRETE BARRIER AND TEMPORARY TRAFFIC CONTROL DEVICES.
- CONSTRUCT TEMPORARY WIDENING.
- START CONSTRUCTION OF HWY. 283 ULTIMATE PAVEMENT AND BRIDGE STRUCTURE.

STATE OF ARKANSAS
REGISTERED PROFESSIONAL ENGINEER
No. 13832
RYAN W. CASTOR
05-02-2024

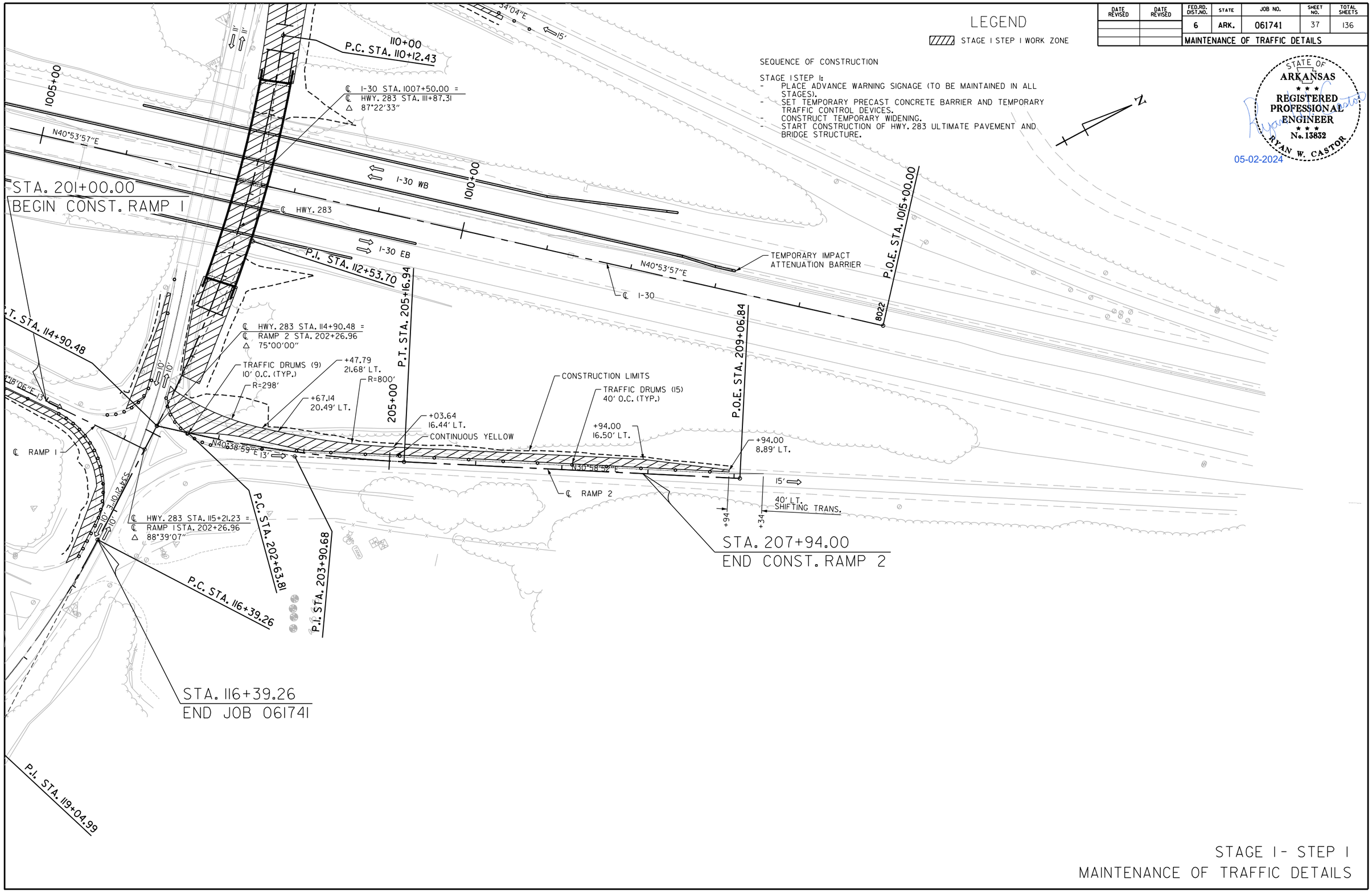

STAGE 1- STEP 1
MAINTENANCE OF TRAFFIC DETAILS

5/2/2024
2:42:57 PM
...\MOT\061741_MOT_03.dgn

DATE REVISED	DATE REVISED	FED.RD. DIST.NO.	STATE	JOB NO.	SHEET NO.	TOTAL SHEETS
		6	ARK.	061741	38	136
		MAINTENANCE OF TRAFFIC DETAILS				

SEQUENCE OF CONSTRUCTION

STAGE 1 STEP 2:
- RELOCATE TEMPORARY TRAFFIC CONTROL DEVICES.
- REMOVE EXISTING ISLANDS AND CONSTRUCT TEMPORARY PAVEMENT.
- CONTINUE CONSTRUCTION OF HWY. 283 ULTIMATE PAVEMENT AND BRIDGE STRUCTURE.

LEGEND

STAGE 1 STEP 2 WORK ZONE

TEMPORARY PAVEMENT

STATE OF ARKANSAS
REGISTERED PROFESSIONAL ENGINEER
No. 13832
RYAN W. CASTOR
05-02-2024

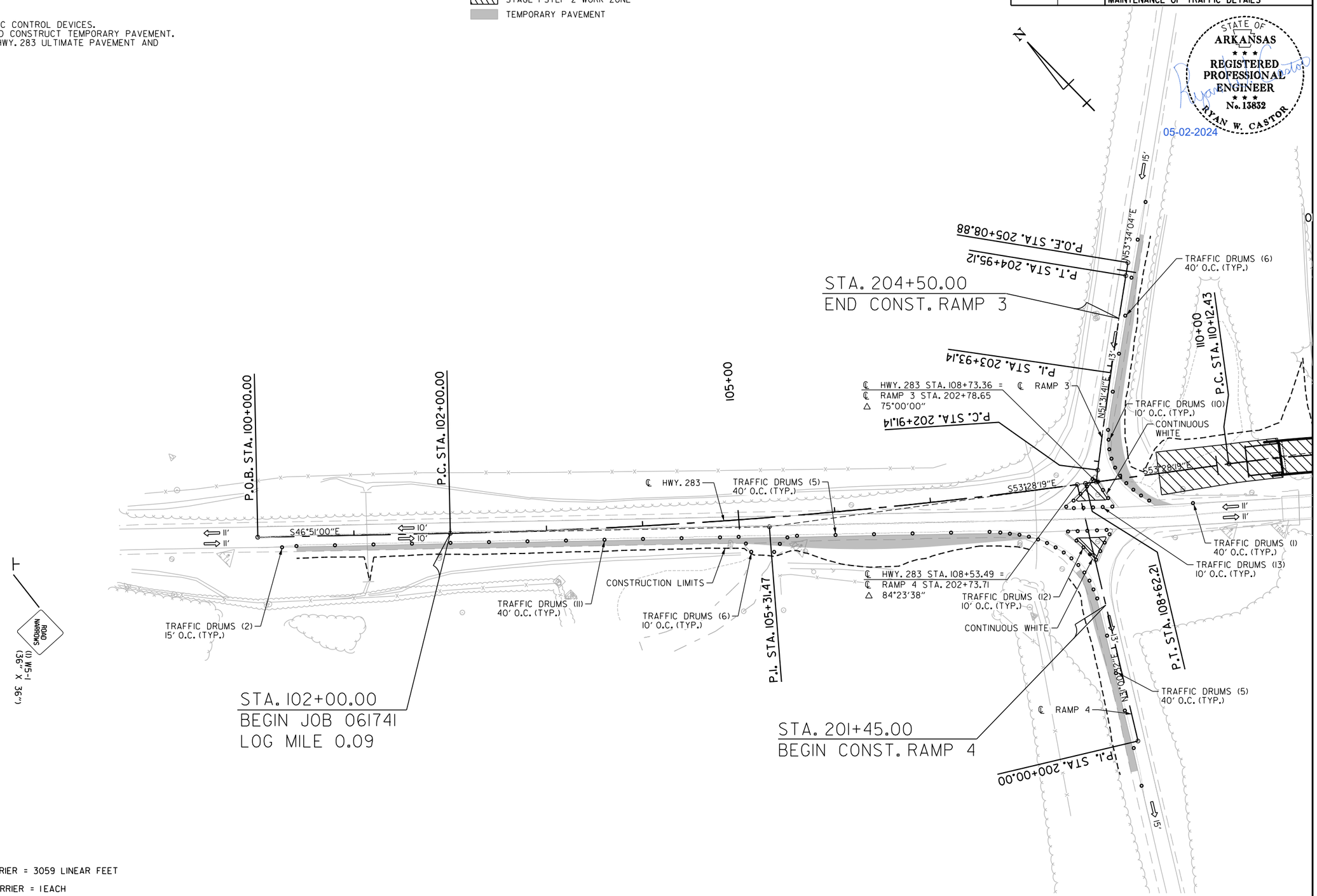

STAGE 1 STEP 2 - QUANTITIES

CONSTRUCTION PAVEMENT MARKINGS (WHITE) = 416 LINEAR FEET

TRAFFIC DRUMS = 172

TEMPORARY PRECAST CONCRETE BARRIER = 3059 LINEAR FEET

TEMPORARY IMPACT ATTENUATION BARRIER = 1 EACH

SPECIAL END UNIT = 3 EACH

STAGE 1 - STEP 2
MAINTENANCE OF TRAFFIC DETAILS

5/2/2024
2:43:07 PM
...\MOT\r061741_MOT_05.dgn

DATE REVISED	DATE REVISED	FED.RD. DIST.NO.	STATE	JOB NO.	SHEET NO.	TOTAL SHEETS
		6	ARK.	061741	39	136
		MAINTENANCE OF TRAFFIC DETAILS				

LEGEND

- STAGE 1 STEP 2 WORK ZONE
- TEMPORARY PAVEMENT

SEQUENCE OF CONSTRUCTION

STAGE 1 STEP 2:
- RELOCATE TEMPORARY TRAFFIC CONTROL DEVICES.
- REMOVE EXISTING ISLANDS AND CONSTRUCT TEMPORARY PAVEMENT.
- CONTINUE CONSTRUCTION OF HWY. 283 ULTIMATE PAVEMENT AND BRIDGE STRUCTURE.

STATE OF ARKANSAS
REGISTERED PROFESSIONAL ENGINEER
No. 13832
RYAN W. CASTOR
05-02-2024

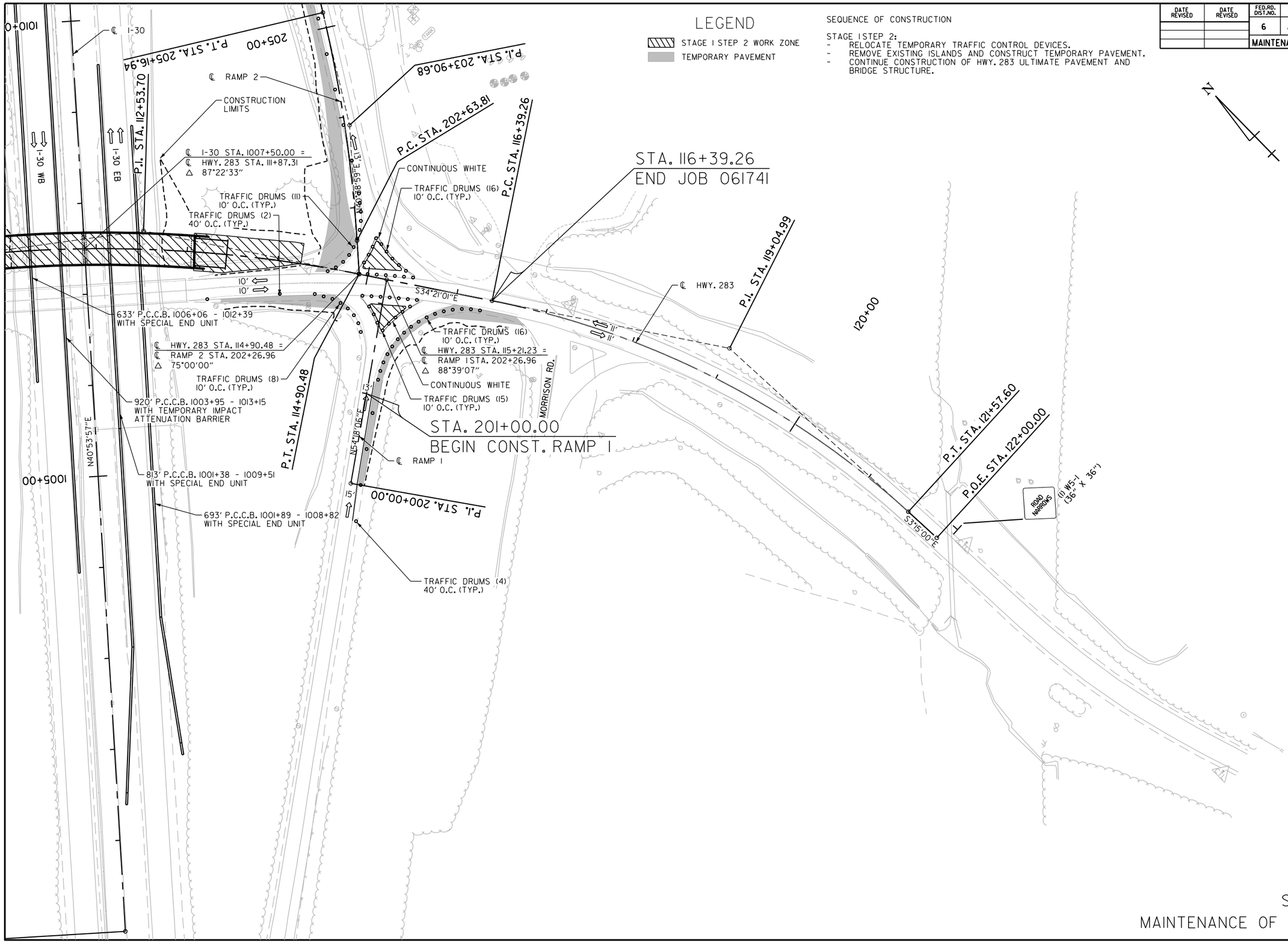

STAGE 1- STEP 2
MAINTENANCE OF TRAFFIC DETAILS

5/2/2024
2:43:06 PM
...\MOT\061741_MOT_06.dgn

DATE REVISED	DATE REVISED	FED.RD. DIST.NO.	STATE	JOB NO.	SHEET NO.	TOTAL SHEETS
		6	ARK.	061741	40	136
		MAINTENANCE OF TRAFFIC DETAILS				

SEQUENCE OF CONSTRUCTION

STAGE 1 STEP 2:
- RELOCATE TEMPORARY TRAFFIC CONTROL DEVICES.
- REMOVE EXISTING ISLANDS AND CONSTRUCT TEMPORARY PAVEMENT.
- CONTINUE CONSTRUCTION OF HWY. 283 ULTIMATE PAVEMENT AND BRIDGE STRUCTURE.

LEGEND

STAGE 1 STEP 2 WORK ZONE

TEMPORARY PAVEMENT

STATE OF ARKANSAS
REGISTERED PROFESSIONAL ENGINEER
No. 13832
RYAN W. CASTOR
05-02-2024

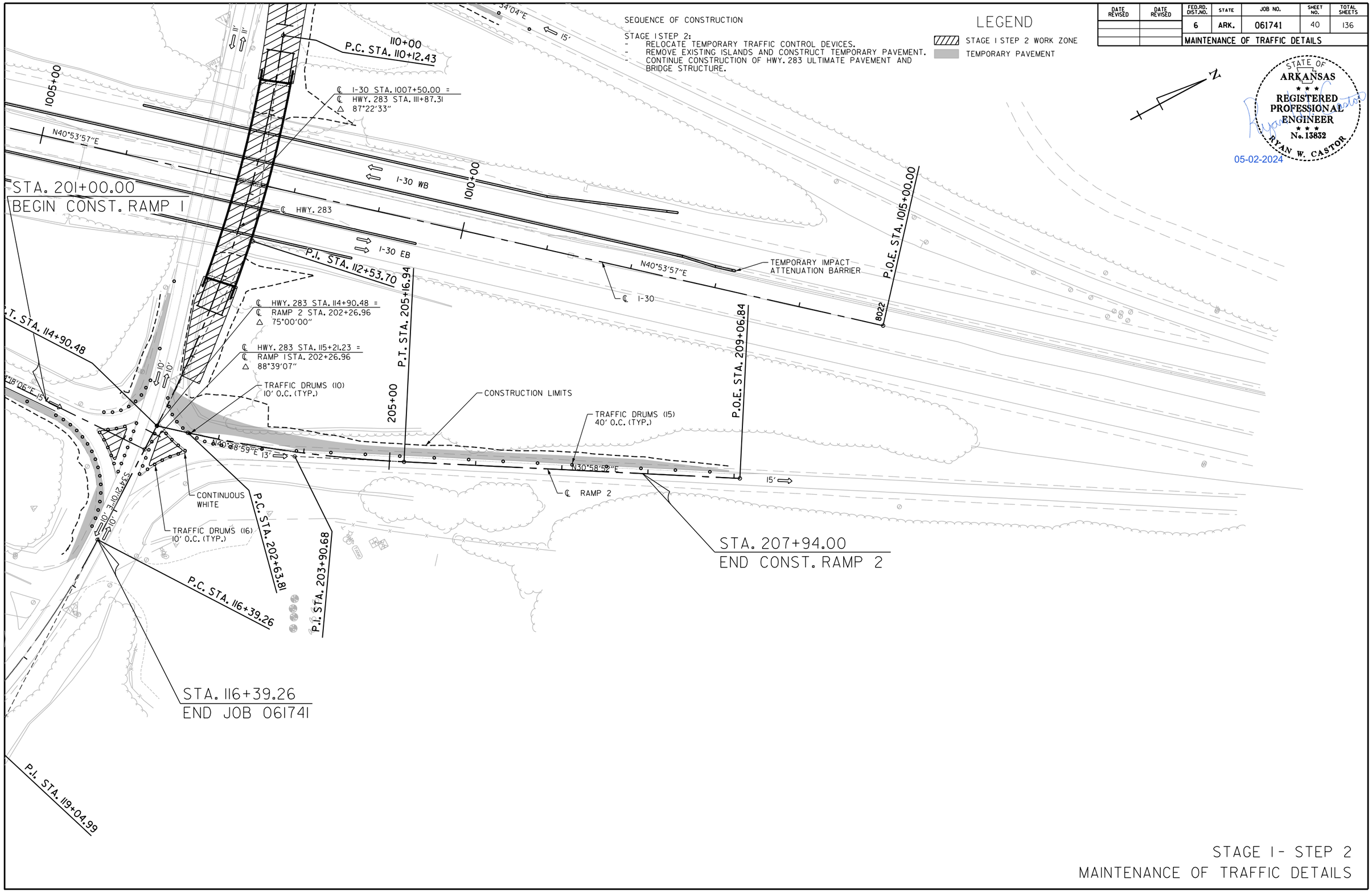

STAGE 1- STEP 2
MAINTENANCE OF TRAFFIC DETAILS

5/2/2024
2:45:35 PM
...\MOT\P061741_MOT_07.dgn

DATE REVISED	DATE REVISED	FED.RD. DIST.NO.	STATE	JOB NO.	SHEET NO.	TOTAL SHEETS
		6	ARK.	061741	41	136
		MAINTENANCE OF TRAFFIC DETAILS				

SEQUENCE OF CONSTRUCTION

STAGE 2 STEP 1:
- REMOVE EXISTING GUARDRAIL ON NORTH SIDE OF HWY. 283.
- INSTALL TEMPORARY PRECAST CONCRETE BARRIER, AND RELOCATE TEMPORARY TRAFFIC CONTROL DEVICES.
- SHIFT HWY. 283, RAMP 2 & RAMP 3 TRAFFIC ONTO TEMPORARY PAVEMENT.
- CONSTRUCT NOTCH AND WIDEN ON THE EAST SIDE OF RAMP 2 AND ON THE NORTH SIDE OF HWY. 283 FROM RAMP 3 TO THE WEST.
- CONSTRUCT OVERLAY AND GRADE RAISE AS NECESSARY ON THE EAST HALF OF RAMP 2 AND ON THE WEST HALF OF RAMP 3.

LEGEND

STAGE 2 STEP 1 WORK ZONE

TEMPORARY PAVEMENT

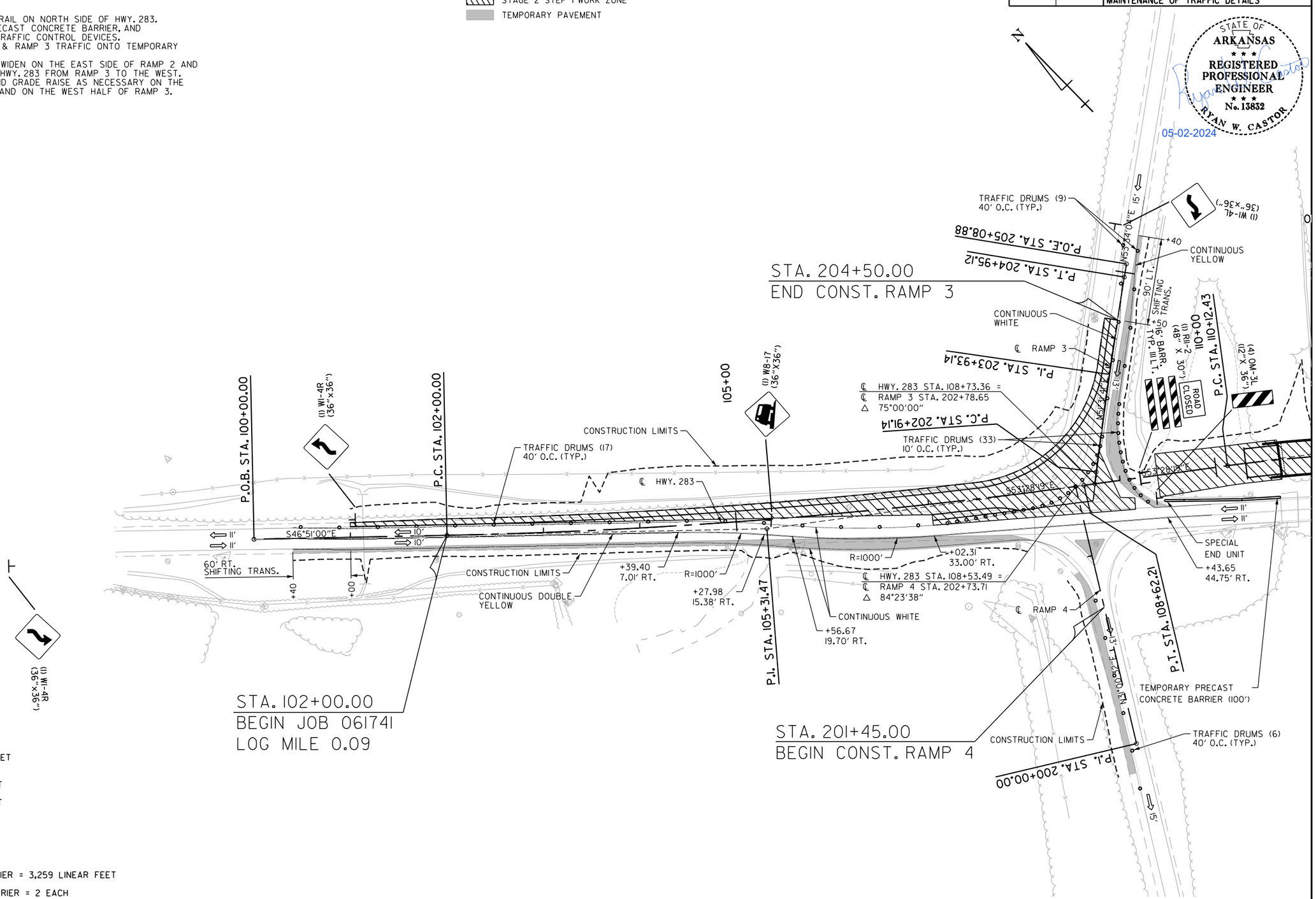

STAGE 2 STEP 1- QUANTITIES

CONSTRUCTION PAVEMENT MARKINGS (YELLOW) = 5,527 LINEAR FEET

CONSTRUCTION PAVEMENT MARKINGS (WHITE) = 3,409 LINEAR FEET

REMOVAL OF CONSTRUCTION PAVEMENT MARKINGS = 4,389

REMOVAL OF PERMANENT PAVEMENT MARKINGS = 1,972

TRAFFIC DRUMS = 123

TEMPORARY PRECAST CONCRETE BARRIER = 3,259 LINEAR FEET

TEMPORARY IMPACT ATTENUATION BARRIER = 2 EACH

SPECIAL END UNIT = 4 EACH

STAGE 2 - STEP 1
MAINTENANCE OF TRAFFIC DETAILS

5/2/2024
2:43:49 PM
...\MOT\P061741_MOT_09.dgn

DATE REVISED	DATE REVISED	FED.RD. DIST.NO.	STATE	JOB NO.	SHEET NO.	TOTAL SHEETS
		6	ARK.	061741	42	136
		MAINTENANCE OF TRAFFIC DETAILS				

STATE OF ARKANSAS
REGISTERED PROFESSIONAL ENGINEER
No. 13832
RYAN W. CASTOR
05-02-2024

LEGEND

- STAGE 2 STEP 1 WORK ZONE
- TEMPORARY PAVEMENT

SEQUENCE OF CONSTRUCTION

STAGE 2 STEP 1:
- REMOVE EXISTING GUARDRAIL ON NORTH SIDE OF HWY. 283.
- INSTALL TEMPORARY PRECAST CONCRETE BARRIER, AND RELOCATE TEMPORARY TRAFFIC CONTROL DEVICES.
- SHIFT HWY. 283, RAMP 2 & RAMP 3 TRAFFIC ONTO TEMPORARY PAVEMENT.
- CONSTRUCT NOTCH AND WIDEN ON THE EAST SIDE OF RAMP 2 AND ON THE NORTH SIDE OF HWY. 283 FROM RAMP 3 TO THE WEST.
- CONSTRUCT OVERLAY AND GRADE RAISE AS NECESSARY ON THE EAST HALF OF RAMP 2 AND ON THE WEST HALF OF RAMP 3.

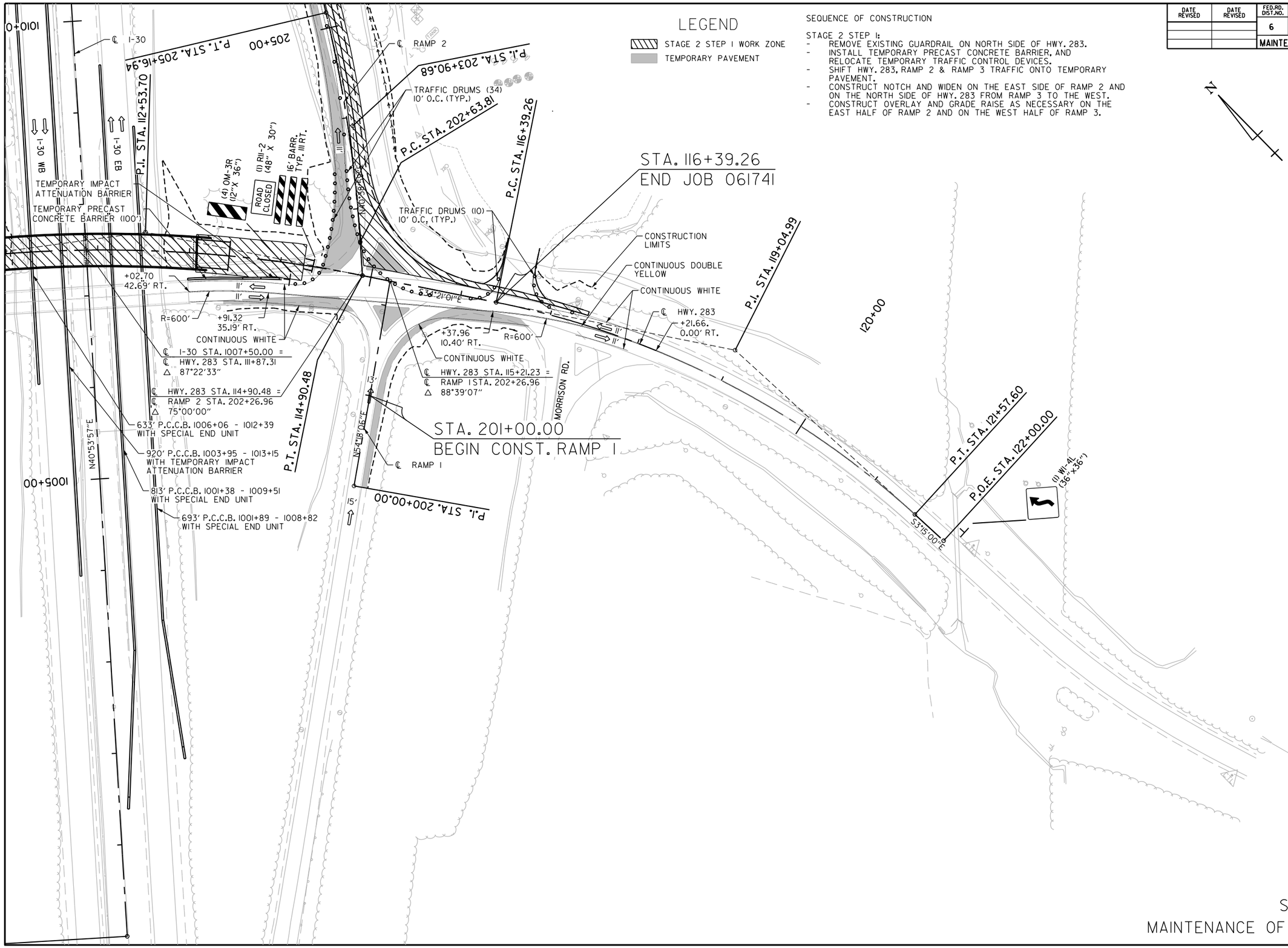

STAGE 2 - STEP 1
MAINTENANCE OF TRAFFIC DETAILS

5/2/2024
2:42:25 PM
...\MOT\r061741_MOT_10.dgn

DATE REVISED	DATE REVISED	FED.RD. DIST.NO.	STATE	JOB NO.	SHEET NO.	TOTAL SHEETS
		6	ARK.	061741	43	136
		MAINTENANCE OF TRAFFIC DETAILS				

SEQUENCE OF CONSTRUCTION

STAGE 2 STEP 1:
- REMOVE EXISTING GUARDRAIL ON NORTH SIDE OF HWY. 283.
- INSTALL TEMPORARY PRECAST CONCRETE BARRIER, AND RELOCATE TEMPORARY TRAFFIC CONTROL DEVICES.
- SHIFT HWY. 283, RAMP 2 & RAMP 3 TRAFFIC ONTO TEMPORARY PAVEMENT.
- CONSTRUCT NOTCH AND WIDEN ON THE EAST SIDE OF RAMP 2 AND ON THE NORTH SIDE OF HWY. 283 FROM RAMP 3 TO THE WEST.
- CONSTRUCT OVERLAY AND GRADE RAISE AS NECESSARY ON THE EAST HALF OF RAMP 2 AND ON THE WEST HALF OF RAMP 3.

LEGEND

STAGE 2 STEP 1 WORK ZONE

TEMPORARY PAVEMENT

STATE OF ARKANSAS
REGISTERED PROFESSIONAL ENGINEER
No. 13832
RYAN W. CASTOR
05-02-2024

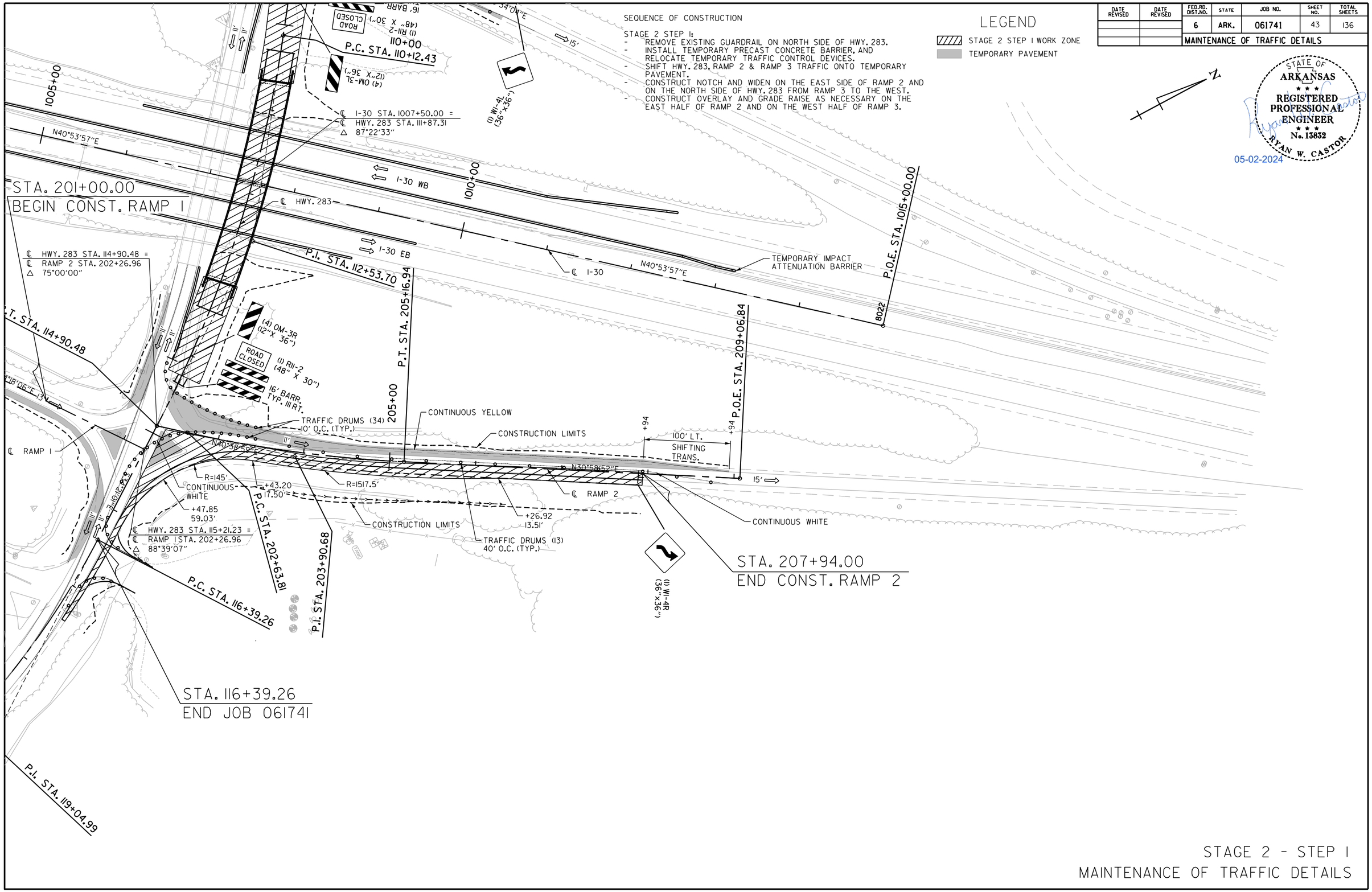

STAGE 2 - STEP 1
MAINTENANCE OF TRAFFIC DETAILS

5/2/2024
2:43:31 PM
...\MOT\r061741_MOT_11.dgn

DATE REVISED	DATE REVISED	FED.RD. DIST.NO.	STATE	JOB NO.	SHEET NO.	TOTAL SHEETS
		6	ARK.	061741	44	136
		MAINTENANCE OF TRAFFIC DETAILS				

SEQUENCE OF CONSTRUCTION

STAGE 2 STEP 2:
- RELOCATE TEMPORARY TRAFFIC CONTROL DEVICES.
- SHIFT RAMP 3 TRAFFIC WEST TO NEWLY CONSTRUCTED PAVEMENT.
- CONSTRUCT NOTCH AND WIDE ON THE EAST SIDE OF RAMP 3.
- CONSTRUCT OVERLAY AND GRADE RAISE AS NECESSARY ON THE EAST HALF ON RAMP 3.
- FINISH CONSTRUCTION OF THE EAST SIDE OF RAMP 2 AND THE HWY. 283 BRIDGE STRUCTURE AND APPROACH PAVEMENT.
- CONSTRUCT NOCTH AND WIDEN ON I-30.
- INSTALL GUARDRAIL AND WRSF ALONG I-30.

LEGEND

- STAGE 2 STEP 2 WORK ZONE
- PRIOR WORK ZONE PVMT
- TEMPORARY PAVEMENT

STATE OF ARKANSAS
REGISTERED PROFESSIONAL ENGINEER
No. 13832
RYAN W. CASTOR
05-02-2024

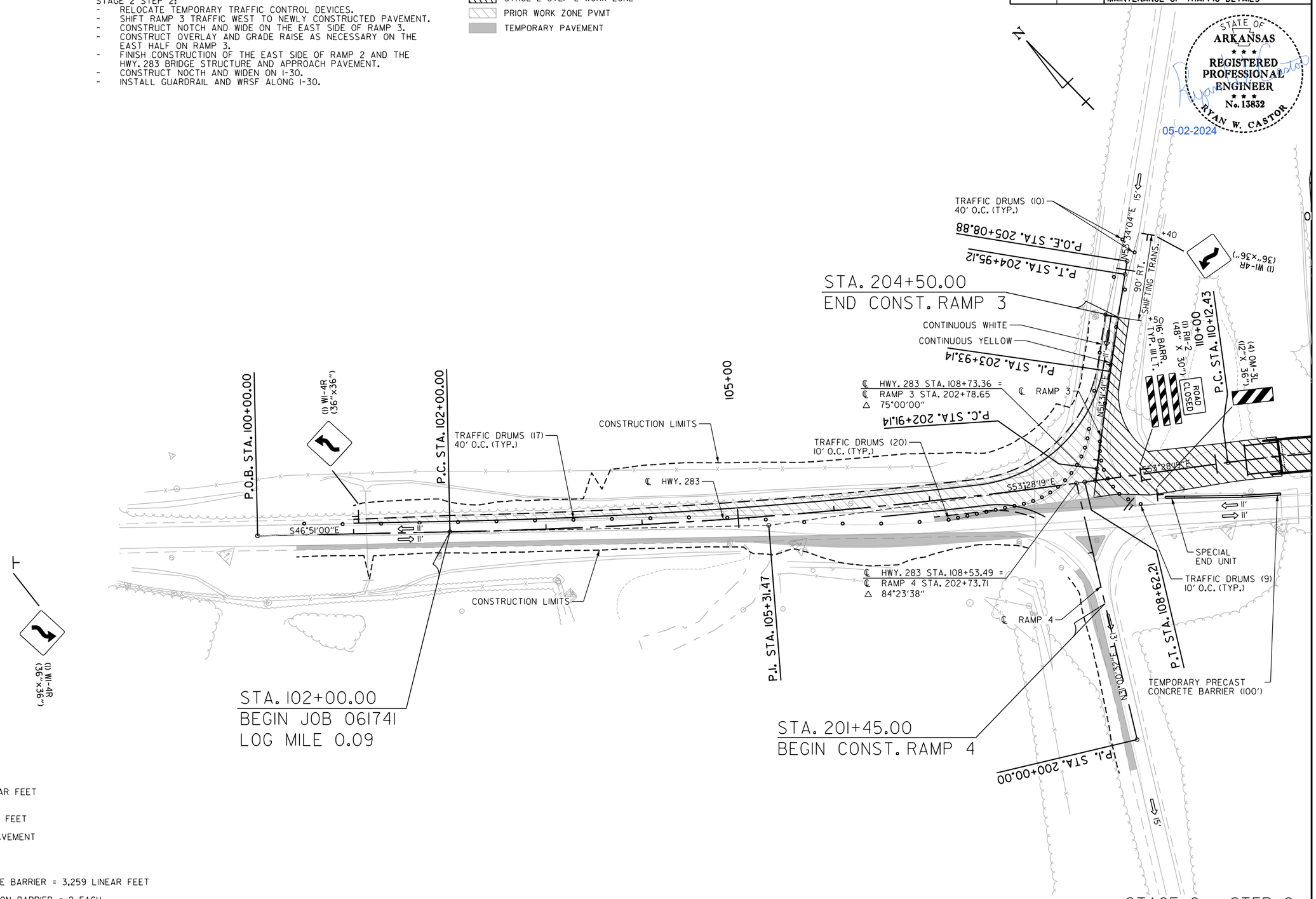

STAGE 2 STEP 2 - QUANTITIES

CONSTRUCTION PAVEMENT MARKINGS (YELLOW) = 303 LINEAR FEET

CONSTRUCTION PAVEMENT MARKINGS (WHITE) = 424 LINEAR FEET

REMOVAL OF CONSTRUCTION PAVEMENT MARKINGS = 751 LINEAR FEET

TRAFFIC DRUMS = 115

TEMPORARY PRECAST CONCRETE BARRIER = 3,259 LINEAR FEET

TEMPORARY IMPACT ATTENUATION BARRIER = 2 EACH

SPECIAL END UNIT = 4 EACH

STAGE 2 - STEP 2
MAINTENANCE OF TRAFFIC DETAILS

5/2/2024
2:43:38 PM
...\MOT\r061741_MOT_13.dgn

DATE REVISED	DATE REVISED	FED.RD. DIST.NO.	STATE	JOB NO.	SHEET NO.	TOTAL SHEETS
		6	ARK.	061741	45	136
		MAINTENANCE OF TRAFFIC DETAILS				

LEGEND

- STAGE 2 STEP 2 WORK ZONE
- PRIOR WORK ZONE PVMT
- TEMPORARY PAVEMENT

SEQUENCE OF CONSTRUCTION

STAGE 2 STEP 2:
- RELOCATE TEMPORARY TRAFFIC CONTROL DEVICES.
- SHIFT RAMP 3 TRAFFIC WEST TO NEWLY CONSTRUCTED PAVEMENT.
- CONSTRUCT NOTCH AND WIDEN ON THE EAST SIDE OF RAMP 3.
- CONSTRUCT OVERLAY AND GRADE RAISE AS NECESSARY ON THE EAST HALF OF RAMP 3.
- FINISH CONSTRUCTION OF THE EAST SIDE OF RAMP 2 AND THE HWY. 283 BRIDGE STRUCTURE AND APPROACH PAVEMENT.
- CONSTRUCT NOCTH AND WIDEN ON I-30.
- INSTALL GUARDRAIL AND WRSF ALONG I-30.

STATE OF ARKANSAS
REGISTERED PROFESSIONAL ENGINEER
No. 13832
RYAN W. CASTOR
05-02-2024

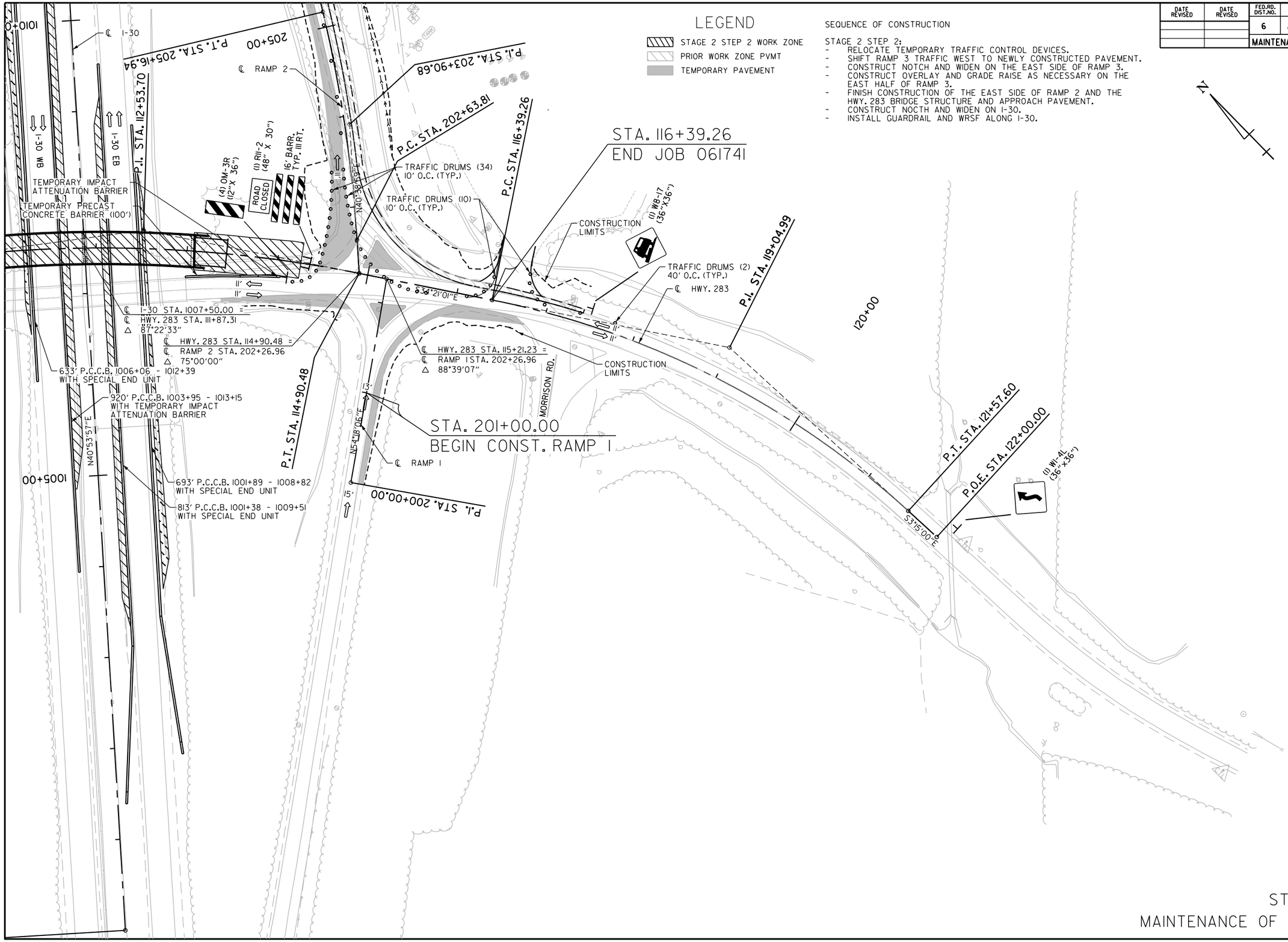

STAGE 2 - STEP 2
MAINTENANCE OF TRAFFIC DETAILS

5/2/2024
2:43:45 PM
...\MOT\061741_MOT_14.dgn

DATE REVISED	DATE REVISED	FED.RD. DIST.NO.	STATE	JOB NO.	SHEET NO.	TOTAL SHEETS
		6	ARK.	061741	46	136
		MAINTENANCE OF TRAFFIC DETAILS				

SEQUENCE OF CONSTRUCTION

STAGE 2 STEP 2:
- RELOCATE TEMPORARY TRAFFIC CONTROL DEVICES.
- SHIFT RAMP 3 TRAFFIC WEST TO NEWLY CONSTRUCTED PAVEMENT.
- CONSTRUCT NOTCH AND WIDEN ON THE EAST SIDE OF RAMP 3.
- CONSTRUCT OVERLAY AND GRADE RAISE AS NECESSARY ON THE EAST HALF OF RAMP 3.
- FINISH CONSTRUCTION OF THE EAST SIDE OF RAMP 2 AND THE HWY. 283 BRIDGE STRUCTURE AND APPROACH PAVEMENT.
- CONSTRUCT NOCTH AND WIDEN ON I-30.
- INSTALL GUARDRAIL AND WRSF ALONG I-30.

LEGEND

- STAGE 2 STEP 2 WORK ZONE
- PRIOR WORK ZONE PVMT
- TEMPORARY PAVEMENT

STATE OF ARKANSAS
REGISTERED PROFESSIONAL ENGINEER
No. 13832
RYAN W. CASTOR
05-02-2024

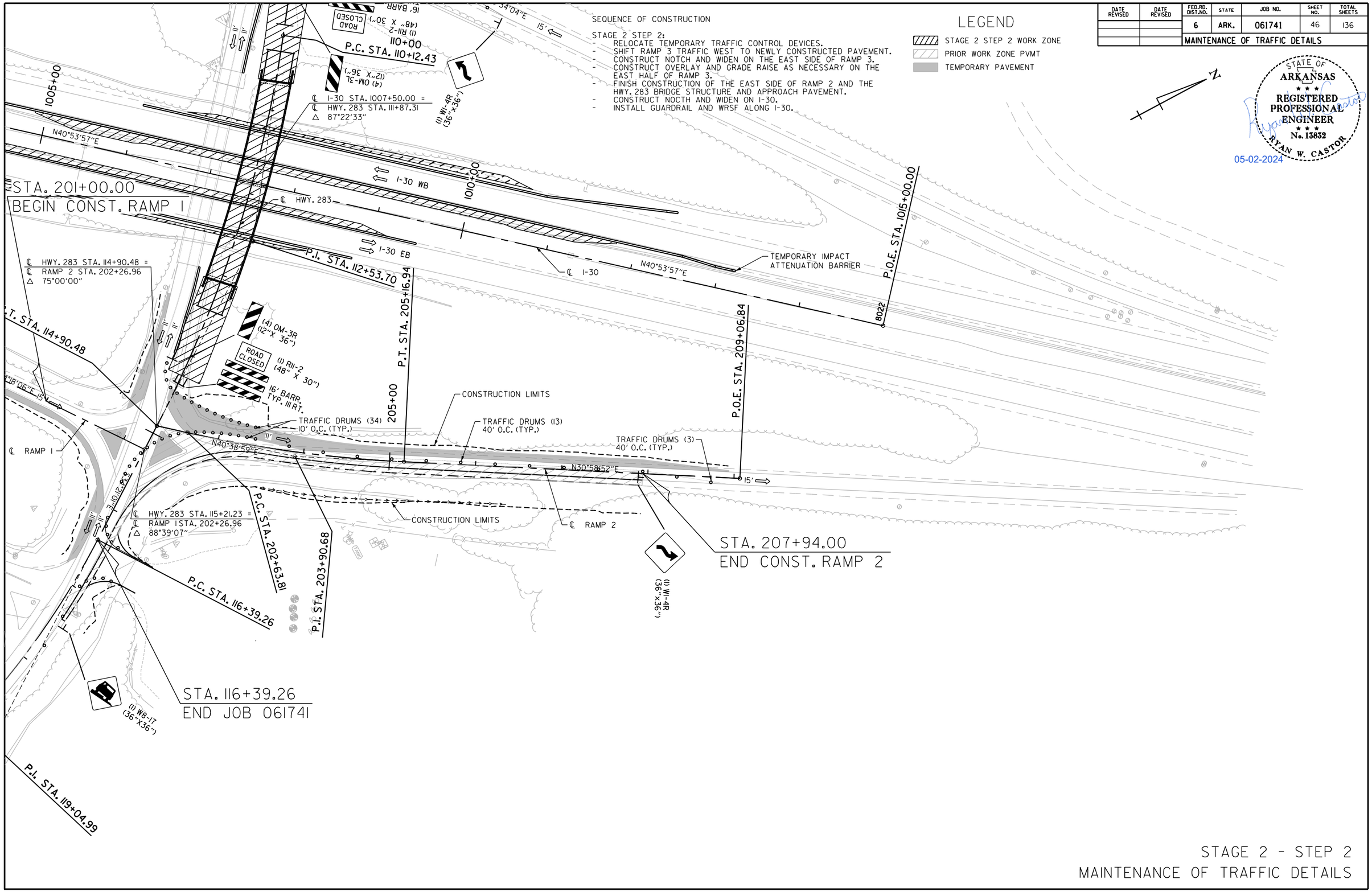

STAGE 2 - STEP 2
MAINTENANCE OF TRAFFIC DETAILS

5/2/2024
2:43:51 PM
...\MOT\r061741_MOT_15.dgn

DATE REVISED	DATE REVISED	FED.RD. DIST.NO.	STATE	JOB NO.	SHEET NO.	TOTAL SHEETS
		6	ARK.	061741	47	136
		MAINTENANCE OF TRAFFIC DETAILS				

SEQUENCE OF CONSTRUCTION

STAGE 3 STEP 1:
- RELOCATE TEMPORARY PRECAST CONCRETE BARRIER AND TEMPORARY TRAFFIC CONTROL DEVICES.
- REMOVE TEMPORARY PRECAST CONCRETE BARRIER.
- CONSTRUCT OVERLAY AND GRADE RAISE AS NECESSARY ON HWY. 283.
- SHIFT RAMP 3 AND HWY. 283 TRAFFIC TO NEW PAVEMENT AND BRIDGE STRUCTURE.
- CONSTRUCT NOTCH AND WIDEN ON THE WEST SIDE OF RAMP 1 AND RAMP 2.
- CONSTRUCT OVERLAY AND GRADE RAISE ON THE WEST SIDE OF RAMP 1 AND RAMP 2.
- CONSTRUCT TEMPORARY WIDENING ON RAMP 4.

LEGEND

- STAGE 3 STEP 1 WORK ZONE
- PRIOR WORK ZONE PVMT
- TEMPORARY PAVEMENT

STATE OF ARKANSAS
REGISTERED PROFESSIONAL ENGINEER
No. 13832
RYAN W. CASTOR
05-02-2024

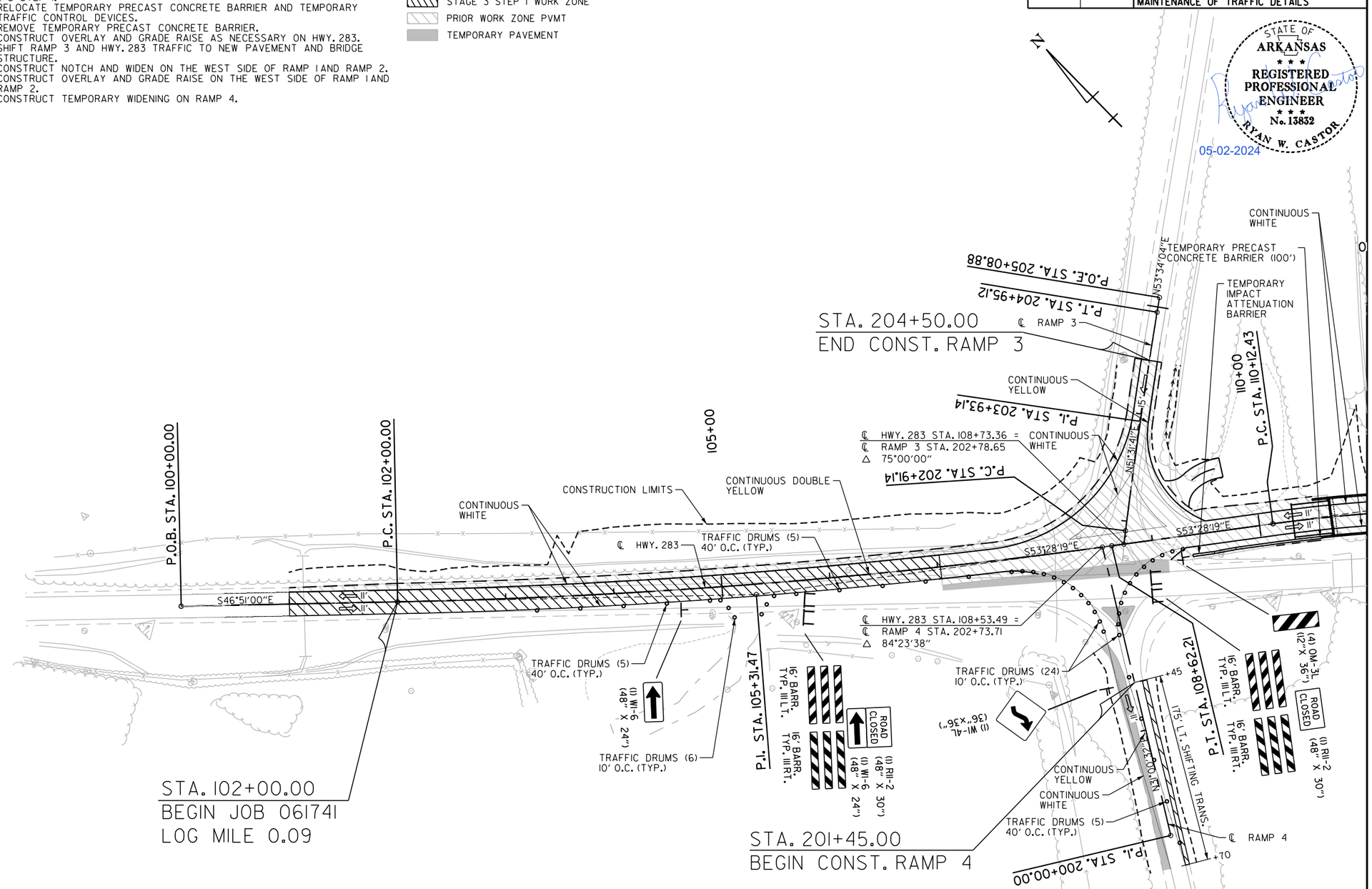

STAGE 3 STEP 1- QUANTITIES

CONSTRUCTION PAVEMENT MARKINGS (YELLOW) = 4,966 LINEAR FEET

CONSTRUCTION PAVEMENT MARKINGS (WHITE) = 4,636 LINEAR FEET

REMOVAL OF CONSTRUCTION PAVEMENT MARKINGS = 7,188 LINEAR FEET

REMOVAL OF PERMANENT PAVEMENT MARKINGS = 1,748 LINEAR FEET

TRAFFIC DRUMS = 104

TEMPORARY PRECAST CONCRETE BARRIER = 180 LINEAR FEET

TEMPORARY IMPACT ATTENUATION BARRIER = 1 EACH

SPECIAL END UNIT = 1 EACH

STAGE 3 - STEP 1
MAINTENANCE OF TRAFFIC DETAILS

5/2/2024
2:42:27 PM
...\MOT\F061741_MOT_17.dgn

DATE REVISED	DATE REVISED	FED.RD. DIST.NO.	STATE	JOB NO.	SHEET NO.	TOTAL SHEETS
		6	ARK.	061741	48	136
		MAINTENANCE OF TRAFFIC DETAILS				

LEGEND

- STAGE 3 STEP 1 WORK ZONE
- PRIOR WORK ZONE PVMT
- TEMPORARY PAVEMENT

SEQUENCE OF CONSTRUCTION

STAGE 3 STEP 1:

- RELOCATE TEMPORARY PRECAST CONCRETE BARRIER AND TEMPORARY TRAFFIC CONTROL DEVICES.
- REMOVE TEMPORARY PRECAST CONCRETE BARRIER.
- CONSTRUCT OVERLAY AND GRADE RAISE AS NECESSARY ON HWY. 283.
- SHIFT RAMP 3 AND HWY. 283 TRAFFIC TO NEW PAVEMENT AND BRIDGE STRUCTURE.
- CONSTRUCT NOTCH AND WIDEN ON THE WEST SIDE OF RAMP 1 AND RAMP 2.
- CONSTRUCT OVERLAY AND GRADE RAISE ON THE WEST SIDE OF RAMP 1 AND RAMP 2.
- CONSTRUCT TEMPORARY WIDENING ON RAMP 4.

STATE OF ARKANSAS
REGISTERED PROFESSIONAL ENGINEER
No. 13832
RYAN W. CASTOR
05-02-2024

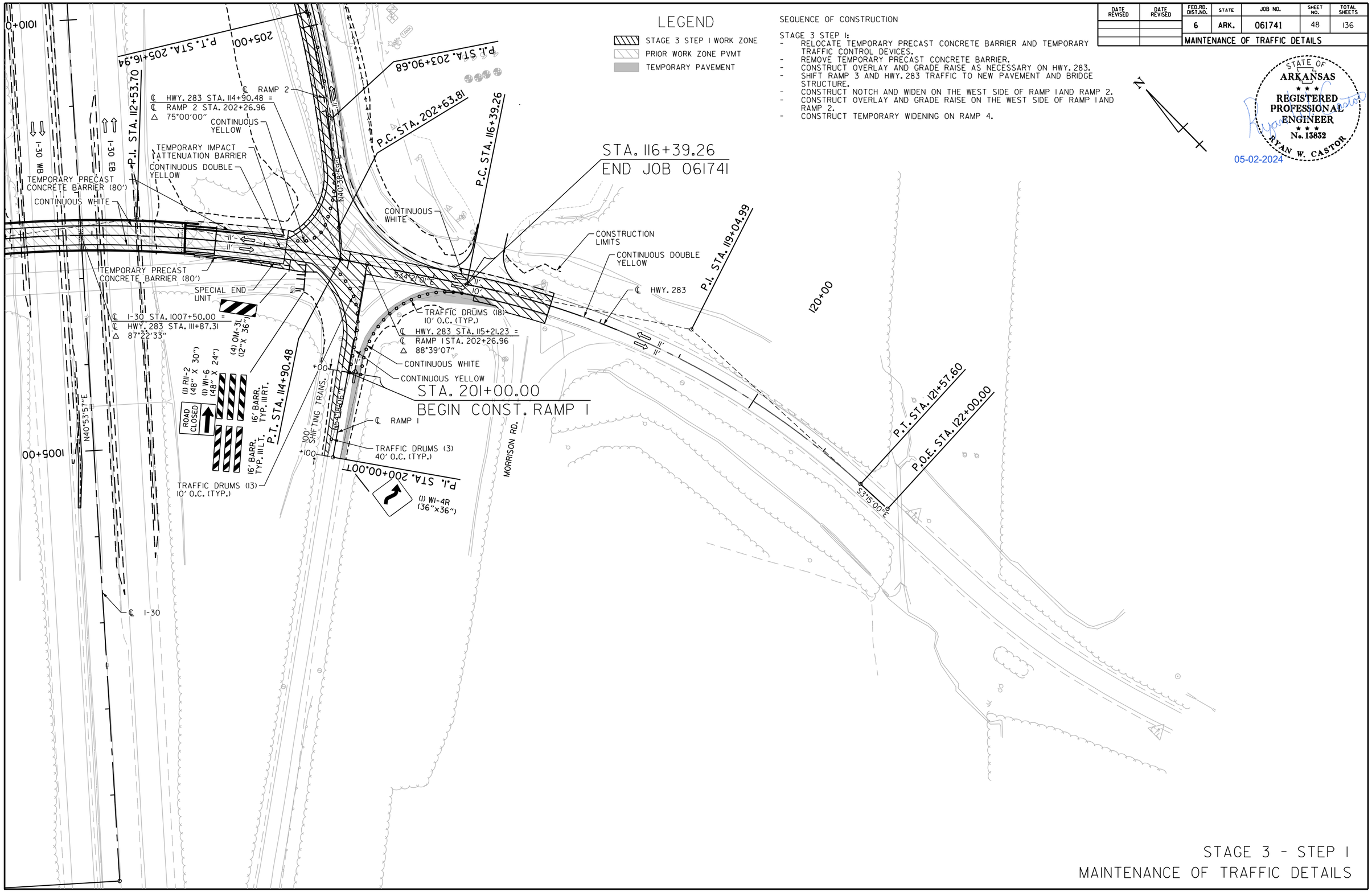

STAGE 3 - STEP 1
MAINTENANCE OF TRAFFIC DETAILS

5/2/2024
2:46:01 PM
...\MOT\061741_MOT_18.dgn

DATE REVISED	DATE REVISED	FED.RD. DIST.NO.	STATE	JOB NO.	SHEET NO.	TOTAL SHEETS
		6	ARK.	061741	49	136
		MAINTENANCE OF TRAFFIC DETAILS				

SEQUENCE OF CONSTRUCTION

STAGE 3 STEP 1:
- RELOCATE TEMPORARY PRECAST CONCRETE BARRIER AND TEMPORARY TRAFFIC CONTROL DEVICES.
- REMOVE TEMPORARY PRECAST CONCRETE BARRIER.
- CONSTRUCT OVERLAY AND GRADE RAISE AS NECESSARY ON HWY. 283.
- SHIFT RAMP 3 AND HWY. 283 TRAFFIC TO NEW PAVEMENT AND BRIDGE STRUCTURE.
- CONSTRUCT NOTCH AND WIDEN ON THE WEST SIDE OF RAMP 1 AND RAMP 2.
- CONSTRUCT OVERLAY AND GRADE RAISE ON THE WEST SIDE OF RAMP 1 AND RAMP 2.
- CONSTRUCT TEMPORARY WIDENING ON RAMP 4.

LEGEND

- STAGE 3 STEP 1 WORK ZONE
- PRIOR WORK ZONE PVMT
- TEMPORARY PAVEMENT

STATE OF ARKANSAS
REGISTERED PROFESSIONAL ENGINEER
No. 13832
RYAN W. CASTOR
05-02-2024

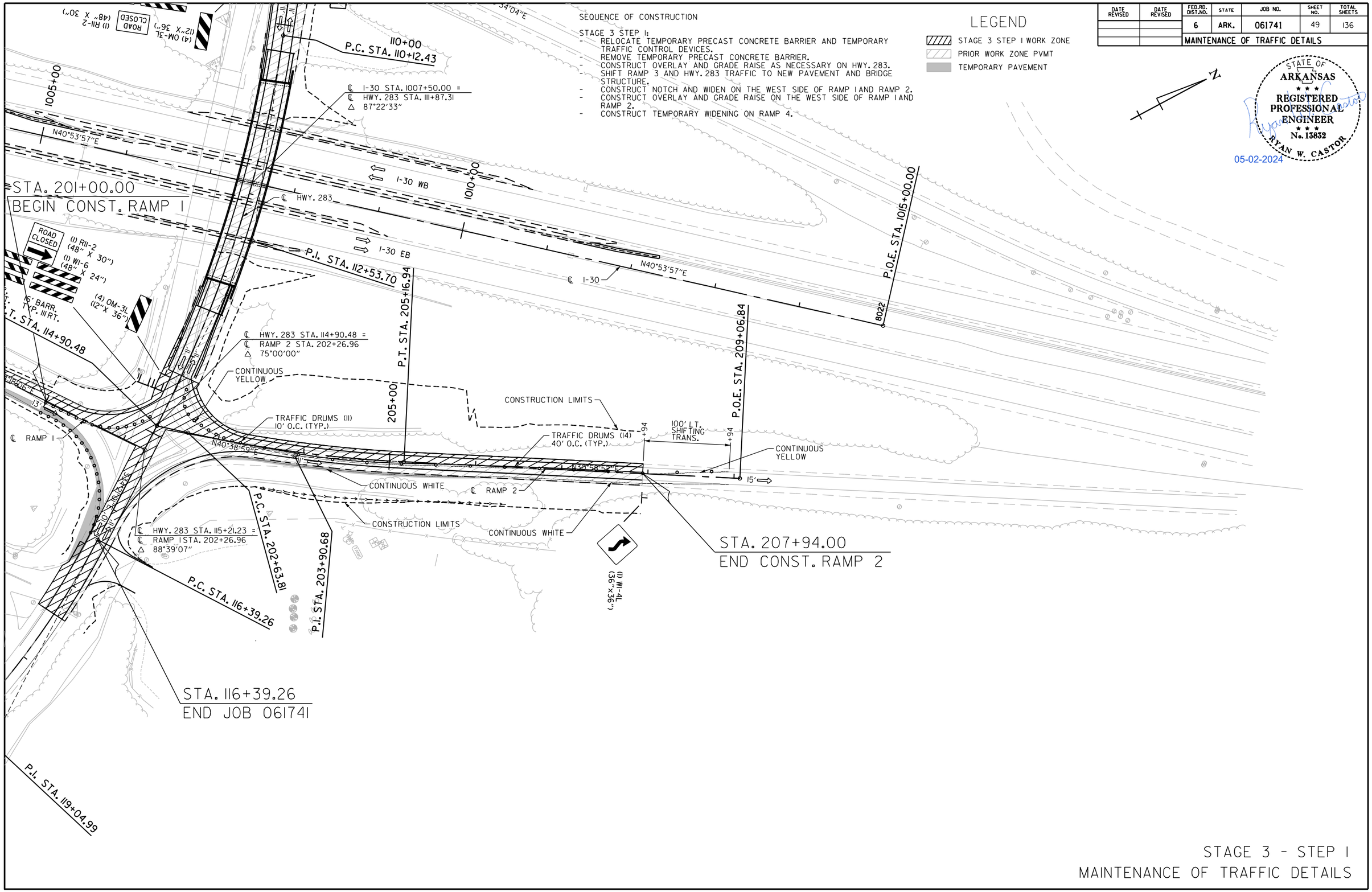

STAGE 3 - STEP 1
MAINTENANCE OF TRAFFIC DETAILS

5/2/2024
2:44:17 PM
...\MOT\V-061741_MOT_19.dgn

DATE REVISED	DATE REVISED	FED.RD. DIST.NO.	STATE	JOB NO.	SHEET NO.	TOTAL SHEETS
		6	ARK.	061741	50	136
		MAINTENANCE OF TRAFFIC DETAILS				

SEQUENCE OF CONSTRUCTION

STAGE 3 STEP 2
- RELOCATE TEMPORARY TRAFFIC CONTROL DEVICES.
- SHIFT RAMP 2 TO NEW PAVEMENT.
- CONSTRUCT NOTCH AND WIDEN ON THE EAST SIDE OF RAMP 1 AND RAMP 4.
- CONSTRUCT OVERLAY AND GRADE RAISE ON THE EAST SIDE OF RAMP 4.

LEGEND

- STAGE 3 STEP 2 WORK ZONE
- PRIOR WORK ZONE PVMT
- TEMPORARY PAVEMENT

STATE OF ARKANSAS
REGISTERED PROFESSIONAL ENGINEER
No. 13832
RYAN W. CASTOR
05-02-2024

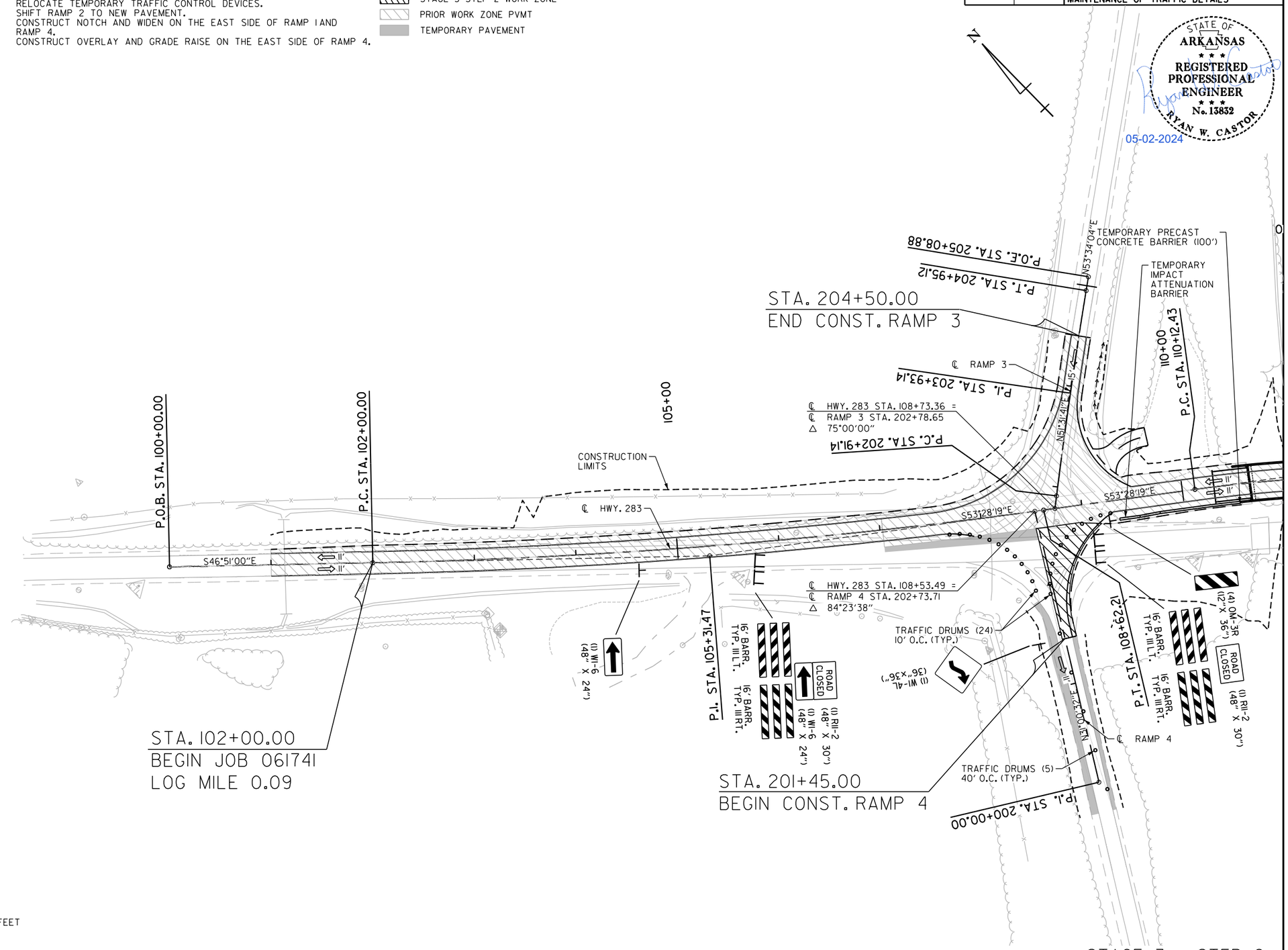

STAGE 3 STEP 2 - QUANTITIES

CONSTRUCTION PAVEMENT MARKINGS (YELLOW) = 941 LINEAR FEET

CONSTRUCTION PAVEMENT MARKINGS (WHITE) = 1,163 LINEAR FEET

REMOVAL OF CONSTRUCTION PAVEMENT MARKINGS = 2,013 LINEAR FEET

TRAFFIC DRUMS = 66

TEMPORARY PRECAST CONCRETE BARRIER = 180 LINEAR FEET

TEMPORARY IMPACT ATTENUATION BARRIER = 1 EACH

SPECIAL END UNIT = 1 EACH

STAGE 3 - STEP 2
MAINTENANCE OF TRAFFIC DETAILS

5/2/2024
2:24:48 PM
...\MOT\Y061741_MOT_21.dgn

DATE REVISED	DATE REVISED	FED.RD. DIST.NO.	STATE	JOB NO.	SHEET NO.	TOTAL SHEETS
		6	ARK.	061741	51	136
		MAINTENANCE OF TRAFFIC DETAILS				

LEGEND

- STAGE 3 STEP 2 WORK ZONE
- PRIOR WORK ZONE PVMT
- TEMPORARY PAVEMENT

SEQUENCE OF CONSTRUCTION

STAGE 3 STEP 2
- RELOCATE TEMPORARY TRAFFIC CONTROL DEVICES.
- SHIFT RAMP 2 TO NEW PAVEMENT.
- CONSTRUCT NOTCH AND WIDEN ON THE EAST SIDE OF RAMP 1 AND RAMP 4.
- CONSTRUCT OVERLAY AND GRADE RAISE ON THE EAST SIDE OF RAMP 4.

STATE OF ARKANSAS
REGISTERED PROFESSIONAL ENGINEER
No. 13832
RYAN W. CASTOR
05-02-2024

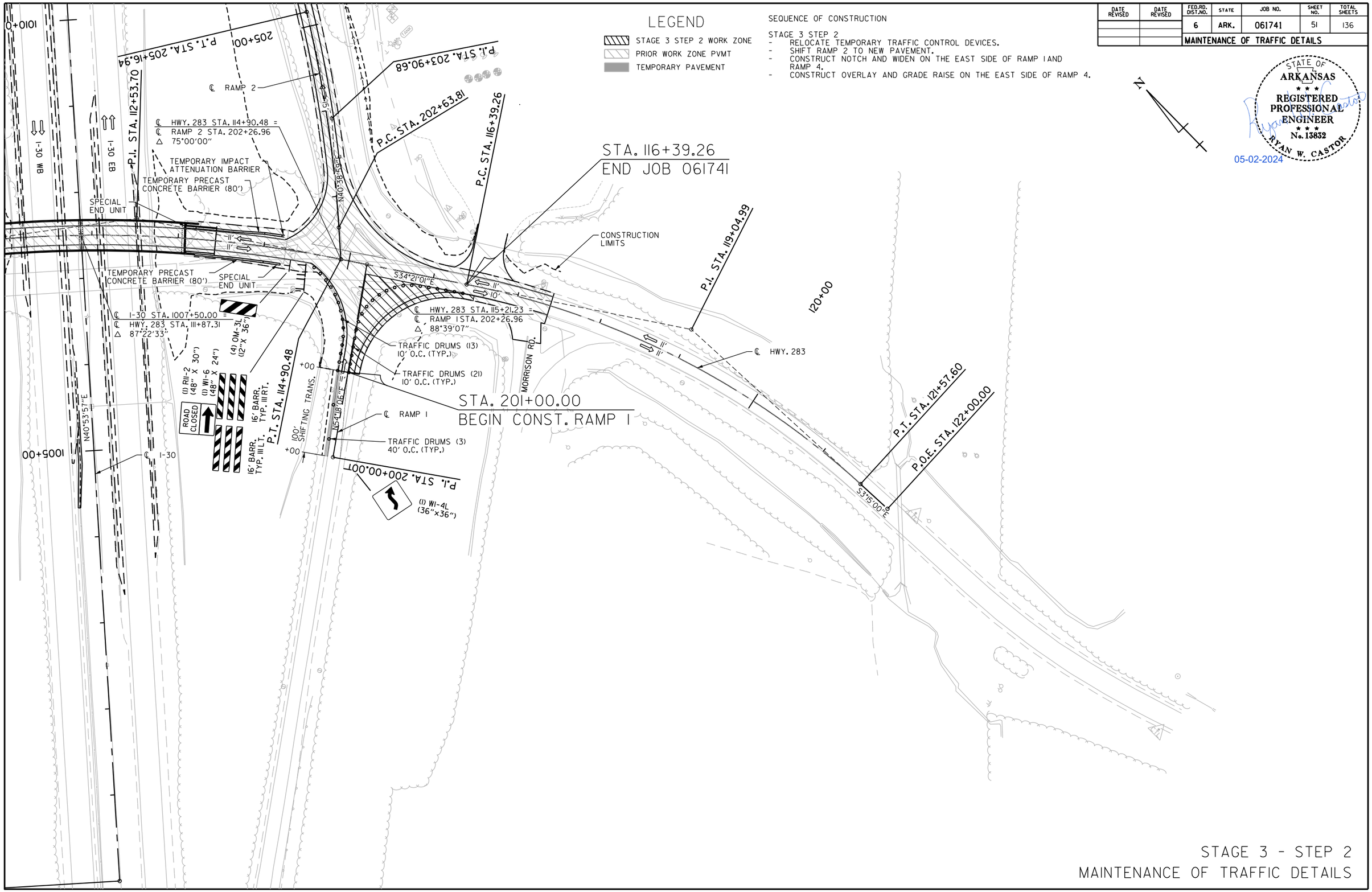

STAGE 3 - STEP 2
MAINTENANCE OF TRAFFIC DETAILS

5/2/2024
2:44:29 PM
...\MOT\r06I741_MOT_22.dgn

DATE REVISED	DATE REVISED	FED.RD. DIST.NO.	STATE	JOB NO.	SHEET NO.	TOTAL SHEETS
		6	ARK.	061741	52	136
		MAINTENANCE OF TRAFFIC DETAILS				

SEQUENCE OF CONSTRUCTION

STAGE 3 STEP 2
- RELOCATE TEMPORARY TRAFFIC CONTROL DEVICES.
- SHIFT RAMP 2 TO NEW PAVEMENT.
- CONSTRUCT NOTCH AND WIDEN ON THE EAST SIDE OF RAMP 1 AND RAMP 4.
- CONSTRUCT OVERLAY AND GRADE RAISE ON THE EAST SIDE OF RAMP 4.

LEGEND

- STAGE 3 STEP 2 WORK ZONE
- PRIOR WORK ZONE PVMT
- TEMPORARY PAVEMENT

STATE OF ARKANSAS
REGISTERED PROFESSIONAL ENGINEER
No. 13832
RYAN W. CASTOR
05-02-2024

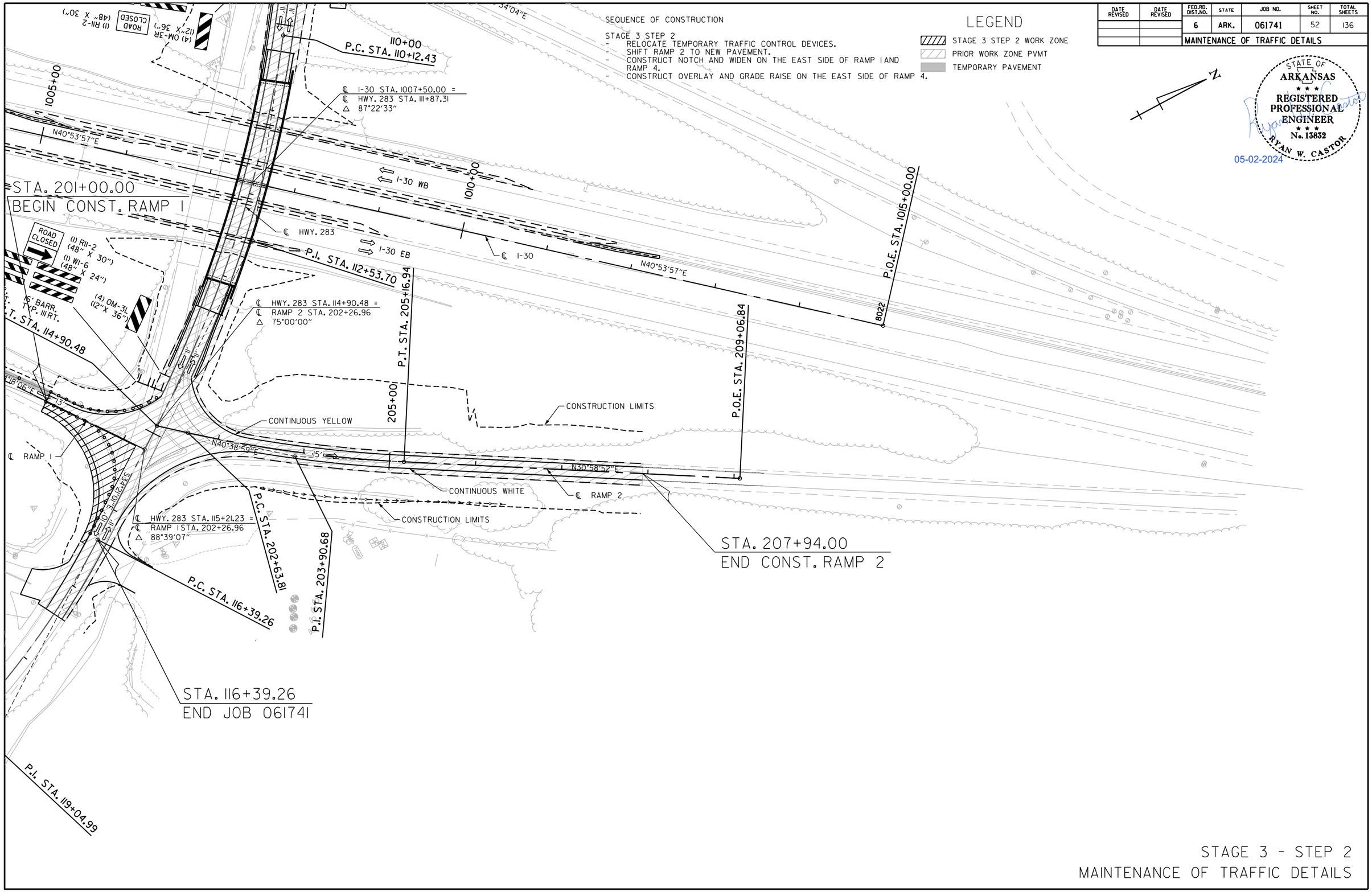

STAGE 3 - STEP 2
MAINTENANCE OF TRAFFIC DETAILS

5/2/2024
2:45:07 PM
...\MOT\r061741_MOT_23.dgn

DATE REVISED	DATE REVISED	FED.RD. DIST.NO.	STATE	JOB NO.	SHEET NO.	TOTAL SHEETS
		6	ARK.	061741	53	136
		MAINTENANCE OF TRAFFIC DETAILS				

SEQUENCE OF CONSTRUCTION

STAGE 3 STEP 3
- RELOCATE TEMPORARY TRAFFIC CONTROL DEVICES.
- SHIFT RAMP 1TO NEW PAVEMENT.
- CONSTRUCT NOTCH AND WIDEN ON THE WEST SIDE OF RAMP 4.
- CONSTRUCT OVERLAY AND GRADE RAISE ON THE WEST SIDE OF RAMP 4.

LEGEND

- STAGE 3 STEP 3 WORK ZONE
- PRIOR WORK ZONE PVMT
- TEMPORARY PAVEMENT

STATE OF ARKANSAS
REGISTERED PROFESSIONAL ENGINEER
No. 13832
RYAN W. CASTOR
05-02-2024

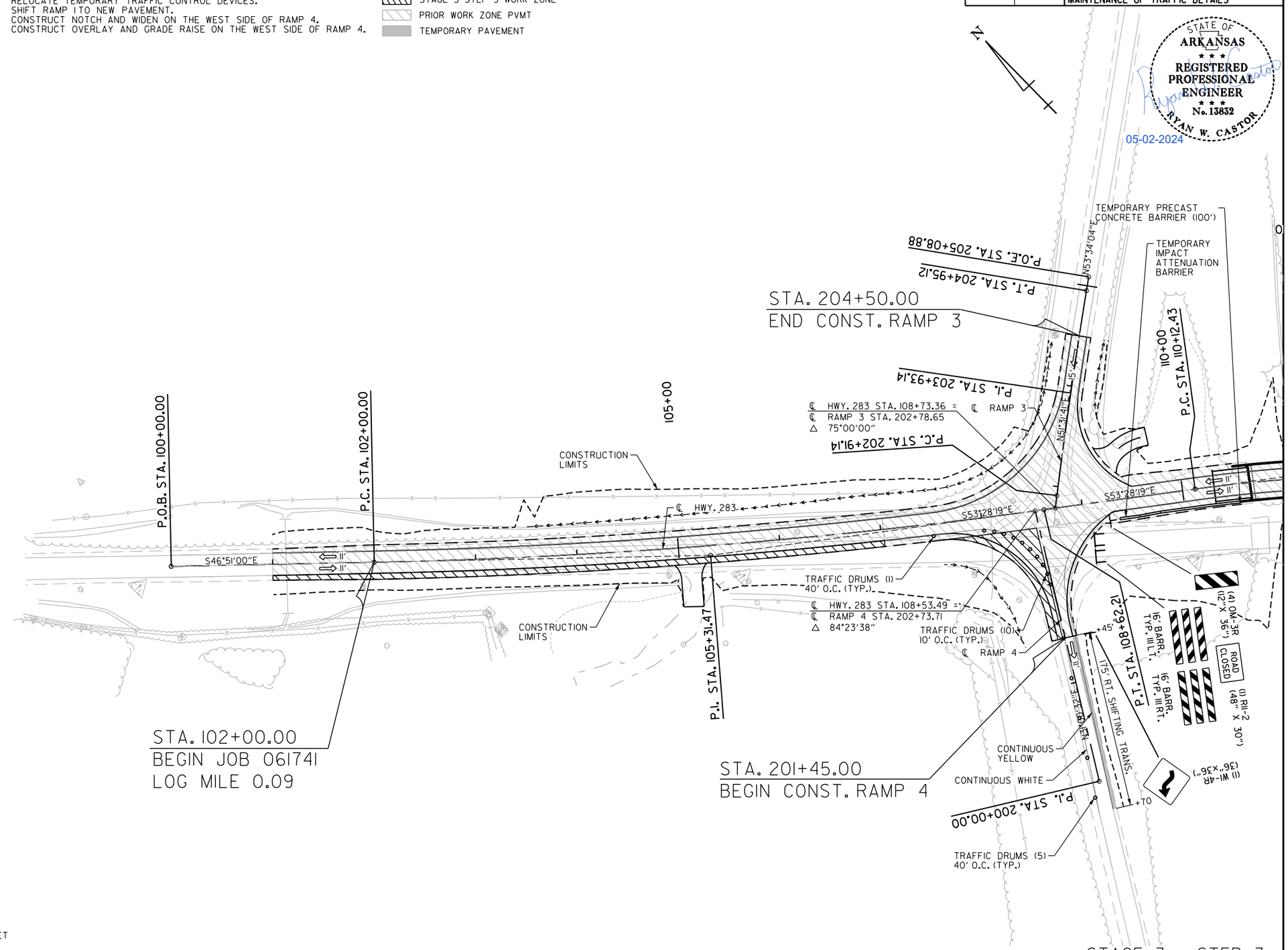

STAGE 3 STEP 3 - QUANTITIES

CONSTRUCTION PAVEMENT MARKINGS (YELLOW) = 721 LINEAR FEET

CONSTRUCTION PAVEMENT MARKINGS (WHITE) = 666 LINEAR FEET

REMOVAL OF CONSTRUCTION PAVEMENT MARKINGS = 1,332 LINEAR FEET

TRAFFIC DRUMS = 16

TEMPORARY PRECAST CONCRETE BARRIER = 180 LINEAR FEET

TEMPORARY IMPACT ATTENUATION BARRIER = 1 EACH

SPECIAL END UNIT = 1 EACH

STAGE 3 - STEP 3
MAINTENANCE OF TRAFFIC DETAILS

5/2/2024
2:24:26 PM
...\MOT\F061741_MOT_25.dgn

DATE REVISED	DATE REVISED	FED.RD. DIST.NO.	STATE	JOB NO.	SHEET NO.	TOTAL SHEETS
		6	ARK.	061741	54	136
		MAINTENANCE OF TRAFFIC DETAILS				

LEGEND

- STAGE 3 STEP 3 WORK ZONE
- PRIOR WORK ZONE PVMT
- TEMPORARY PAVEMENT

SEQUENCE OF CONSTRUCTION

STAGE 3 STEP 3
- RELOCATE TEMPORARY TRAFFIC CONTROL DEVICES.
- SHIFT RAMP 1TO NEW PAVEMENT.
- CONSTRUCT NOTCH AND WIDEN ON THE WEST SIDE OF RAMP 4.
- CONSTRUCT OVERLAY AND GRADE RAISE ON THE WEST SIDE OF RAMP 4.

STATE OF ARKANSAS
REGISTERED PROFESSIONAL ENGINEER
No. 13832
RYAN W. CASTOR
05-02-2024

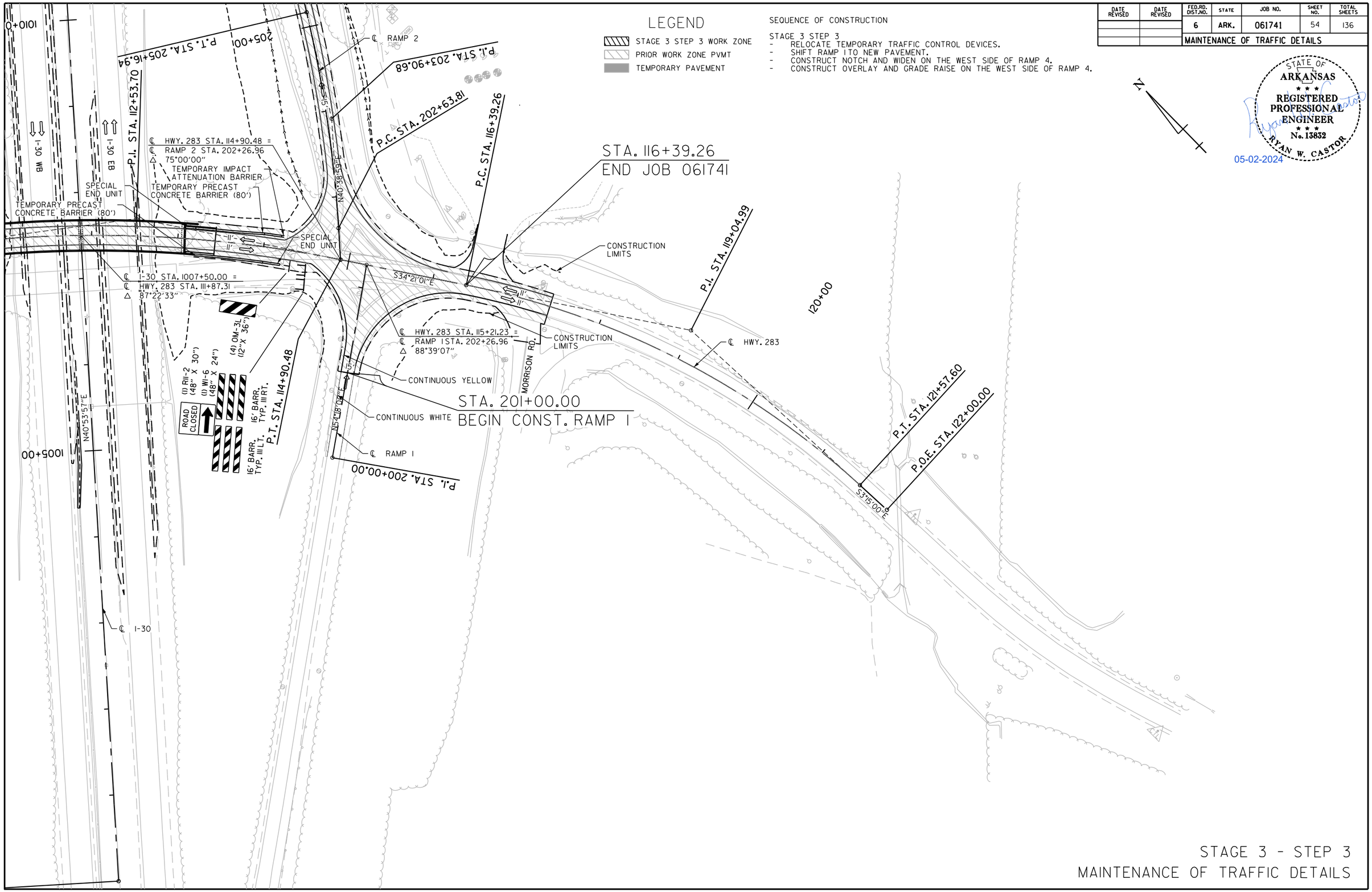

STAGE 3 - STEP 3
MAINTENANCE OF TRAFFIC DETAILS

5/2/2024
2:24:43 PM
...\MOT\06I741_MOT_26.dgn

DATE REVISED	DATE REVISED	FED.RD. DIST.NO.	STATE	JOB NO.	SHEET NO.	TOTAL SHEETS
		6	ARK.	061741	55	136
		MAINTENANCE OF TRAFFIC DETAILS				

SEQUENCE OF CONSTRUCTION

STAGE 3 STEP 3
- RELOCATE TEMPORARY TRAFFIC CONTROL DEVICES.
- SHIFT RAMP 1 TO NEW PAVEMENT.
- CONSTRUCT NOTCH AND WIDEN ON THE WEST SIDE OF RAMP 4.
- CONSTRUCT OVERLAY AND GRADE RAISE ON THE WEST SIDE OF RAMP 4.

LEGEND

- STAGE 3 STEP 3 WORK ZONE
- PRIOR WORK ZONE PVMT
- TEMPORARY PAVEMENT

STATE OF ARKANSAS
REGISTERED PROFESSIONAL ENGINEER
No. 13832
RYAN W. CASTOR
05-02-2024

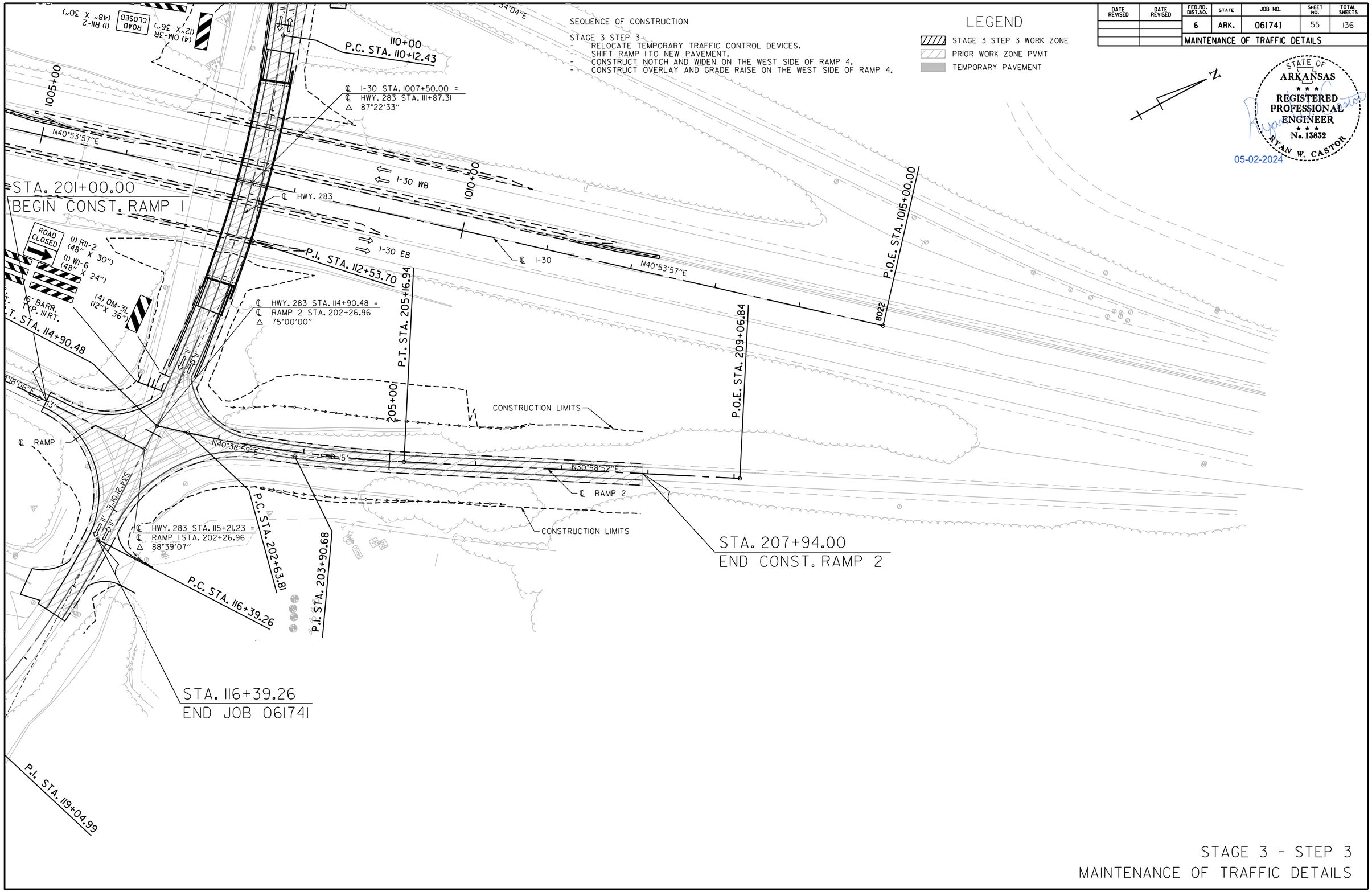

STAGE 3 - STEP 3
MAINTENANCE OF TRAFFIC DETAILS

5/2/2024
2:44:49 PM
...\MOT\F061741_MOT_27.dgn

DATE REVISED	DATE REVISED	FED.RD. DIST.NO.	STATE	JOB NO.	SHEET NO.	TOTAL SHEETS
		6	ARK.	061741	56	136
		MAINTENANCE OF TRAFFIC DETAILS				

SEQUENCE OF CONSTRUCTION

STAGE 4:
- RELOCATE TEMPORARY TRAFFIC CONTROL DEVICES.
- INSTALL GUARDRAIL ON HWY. 283.
- CONSTRUCT ISLANDS.
- CONSTRUCT REMAINDER OF FINAL LIFT OF ACHM AND MILL AND OVERLAY TRANSITIONS AT BEGIN AND END OF JOB.
- REMOVE TEMPORARY TRAFFIC CONTROL DEVICES AND INSTALL PERMANENT PAVEMENT MARKINGS.

LEGEND

STAGE 4 WORK ZONE

STATE OF ARKANSAS
REGISTERED PROFESSIONAL ENGINEER
No. 13832
RYAN W. CASTOR
05-02-2024

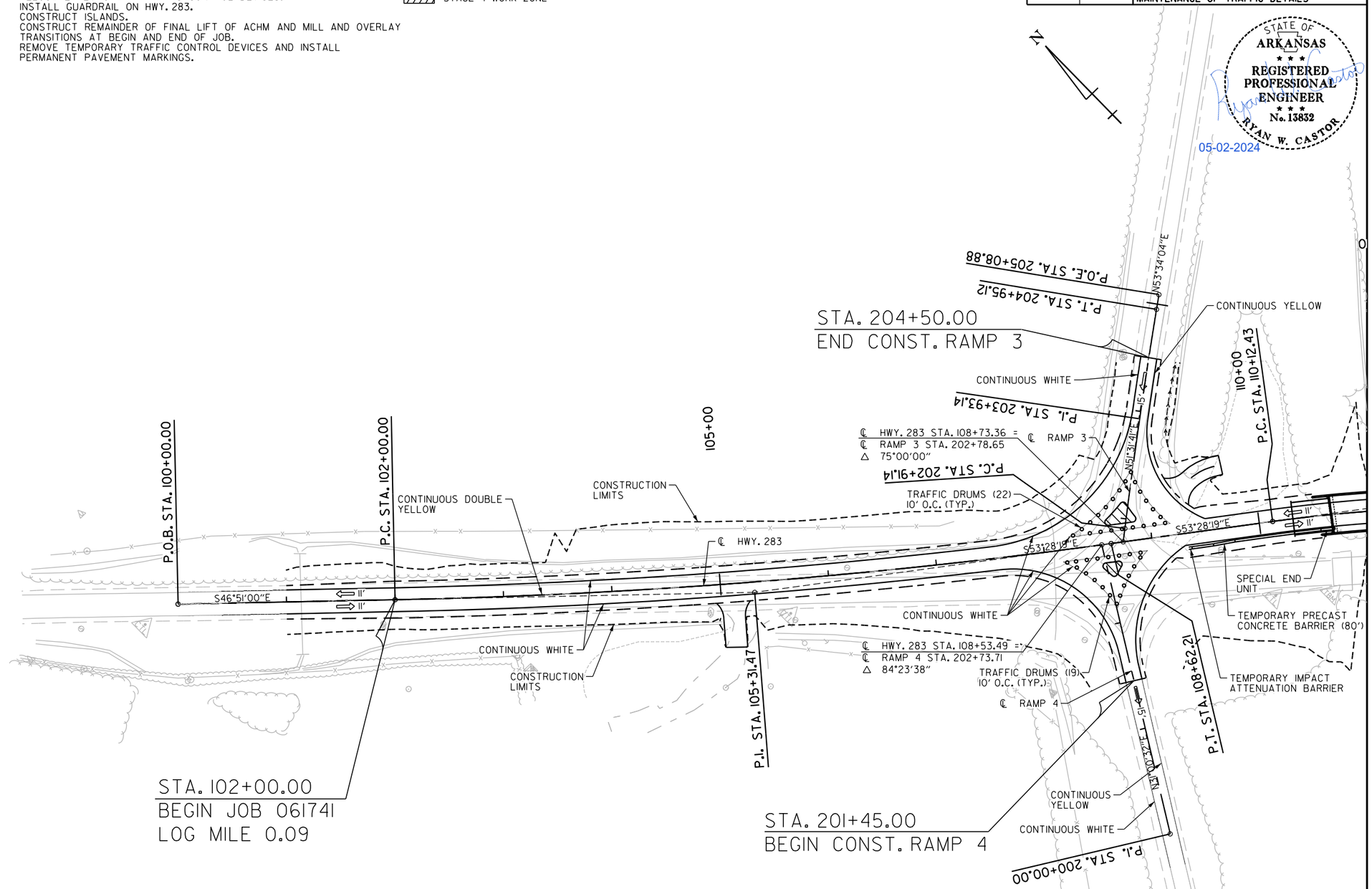

STAGE 4 - QUANTITIES

TRAFFIC DRUMS = 82

TEMPORARY PRECAST CONCRETE BARRIER = 206 LINEAR FEET

TEMPORARY IMPACT ATTENUATION BARRIER = 2 EACH

SPECIAL END UNIT = 2 EACH

STAGE 4
MAINTENANCE OF TRAFFIC DETAILS

5/2/2024
2:24:57 PM
...\MOT\r061741_MOT_29.dgn

DATE REVISED	DATE REVISED	FED.RD. DIST.NO.	STATE	JOB NO.	SHEET NO.	TOTAL SHEETS
		6	ARK.	061741	57	136
		MAINTENANCE OF TRAFFIC DETAILS				

LEGEND

STAGE 4 WORK ZONE

SEQUENCE OF CONSTRUCTION

STAGE 4:
- RELOCATE TEMPORARY TRAFFIC CONTROL DEVICES.
- INSTALL GUARDRAIL ON HWY. 283.
- CONSTRUCT ISLANDS.
- CONSTRUCT REMAINDER OF FINAL LIFT OF ACHM AND MILL AND OVERLAY TRANSITIONS AT BEGIN AND END OF JOB.
- REMOVE TEMPORARY TRAFFIC CONTROL DEVICES AND INSTALL PERMANENT PAVEMENT MARKINGS.

STATE OF ARKANSAS
REGISTERED PROFESSIONAL ENGINEER
No. 13832
RYAN W. CASTOR
05-02-2024

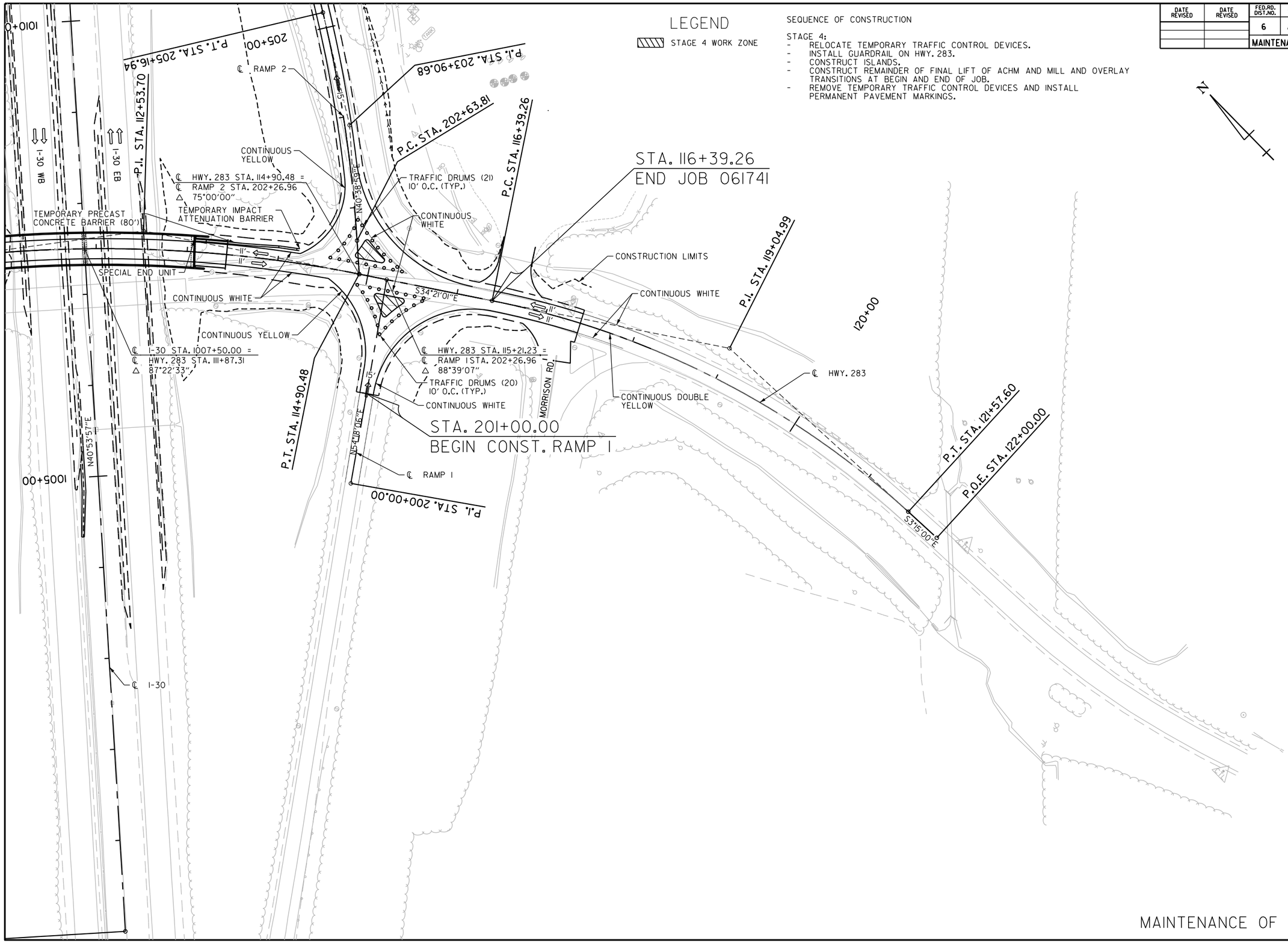

STAGE 4
MAINTENANCE OF TRAFFIC DETAILS

5/2/2024
2:46:59 PM
...\MOT\061741_MOT_30.dgn

DATE REVISED	DATE REVISED	FED.RD. DIST.NO.	STATE	JOB NO.	SHEET NO.	TOTAL SHEETS
		6	ARK.	061741	58	136
		MAINTENANCE OF TRAFFIC DETAILS				

SEQUENCE OF CONSTRUCTION

STAGE 4
- RELOCATE TEMPORARY TRAFFIC CONTROL DEVICES.
- INSTALL GUARDRAIL ON HWY. 283.
- CONSTRUCT ISLANDS.
- CONSTRUCT REMAINDER OF FINAL LIFT OF ACHM AND MILL AND OVERLAY TRANSITIONS AT BEGIN AND END OF JOB.
- REMOVE TEMPORARY TRAFFIC CONTROL DEVICES AND INSTALL PERMANENT PAVEMENT MARKINGS.

LEGEND

STAGE 4 WORK ZONE

STATE OF ARKANSAS
REGISTERED PROFESSIONAL ENGINEER
No. 13832
RYAN W. CASTOR
05-02-2024

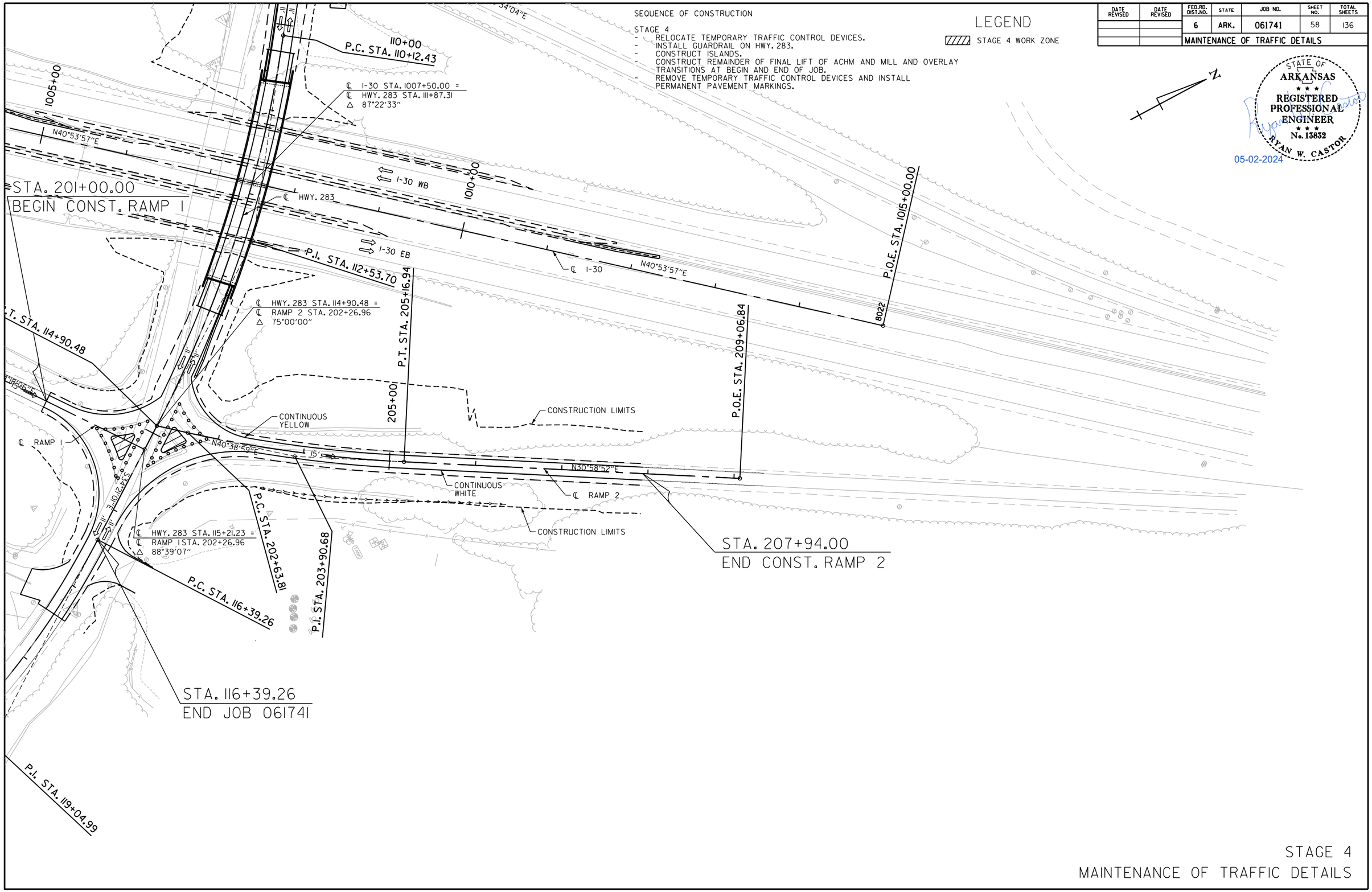

STAGE 4
MAINTENANCE OF TRAFFIC DETAILS

5/2/2024
2:45:02 PM
...\MOT\F061741_MOT_31.dgn

DATE REVISED	DATE REVISED	FED.RD. DIST.NO.	STATE	JOB NO.	SHEET NO.	TOTAL SHEETS
		6	ARK.	061741	59	136

PERMANENT PAVEMENT MARKING DETAILS

STATE OF ARKANSAS
REGISTERED PROFESSIONAL ENGINEER
No. 13832
RYAN W. CASTOR
05-02-2024

PERMANENT PAVEMENT MARKING QUANTITIES:

ENHANCED THERMOPLASTIC PAVEMENT MARKING WHITE (6")	= 1775	LIN. FT.
ENHANCED THERMOPLASTIC PAVEMENT MARKING YELLOW (6")	= 1546	LIN. FT.
THERMOPLASTIC PAVEMENT MARKING WHITE (6")	= 2794	LIN. FT.
THERMOPLASTIC PAVEMENT MARKING YELLOW (6")	= 3324	LIN. FT.
THERMOPLASTIC PAVEMENT MARKING WHITE (8")	= 897	LIN. FT.
THERMOPLASTIC PAVEMENT MARKING WHITE (12")	= 36	LIN. FT.
THERMOPLASTIC PAVEMENT MARKING (ARROWS)	= 2	EACH
THERMOPLASTIC PAVEMENT MARKING (YIELD LINE)	= 68	LIN. FT.
REFLECTORIZED PAINT PAVEMENT MARKING WHITE (10")	= 306	LIN. FT.
RAISED PAVEMENT MARKERS (TYPE II) (YELLOW/YELLOW)	= 22	EACH
DELINEATORS (TYPE 2) (WHITE/RED)	= 57	EACH
DELINEATORS (TYPE 2) (YELLOW/RED)	= 57	EACH

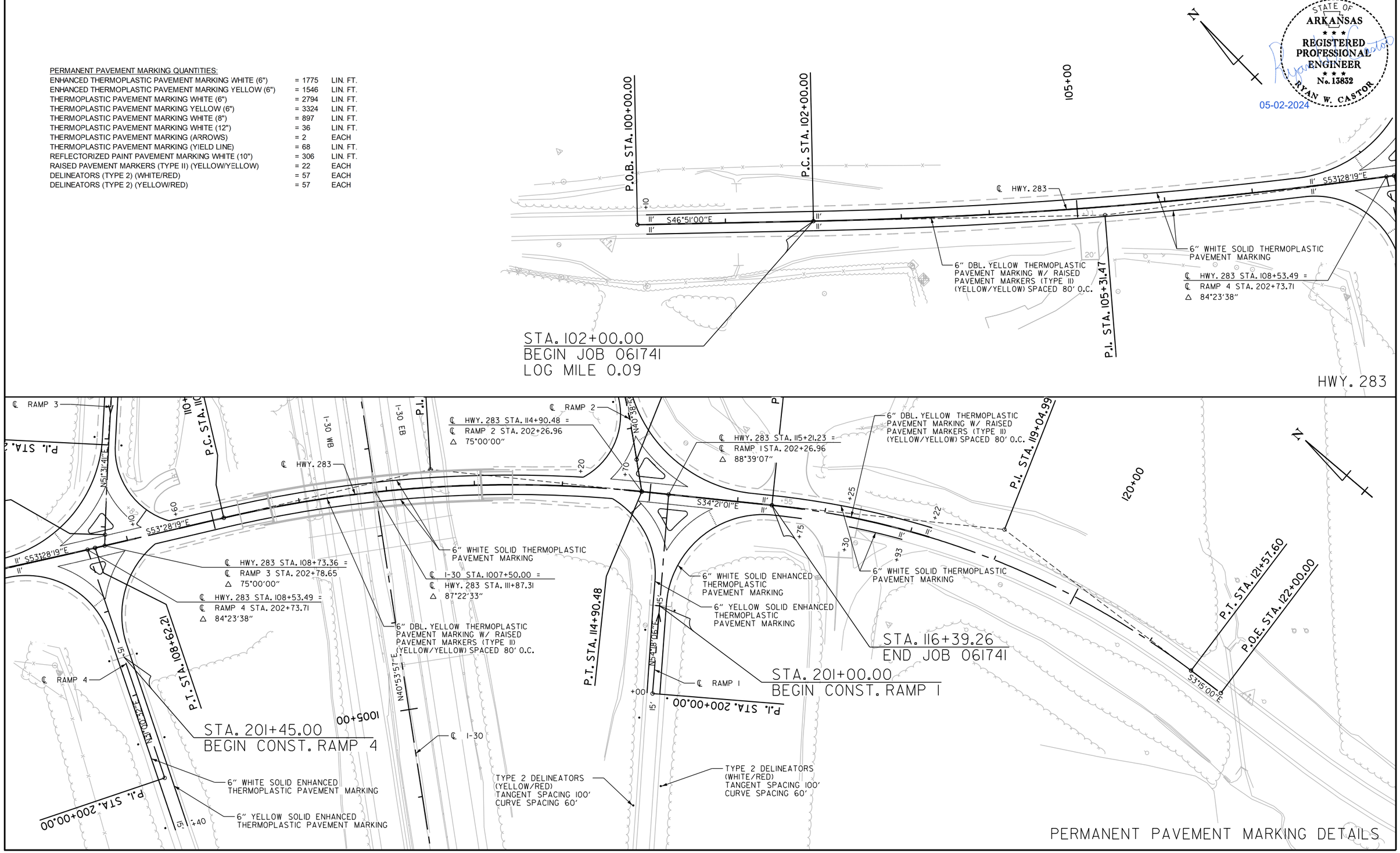

5/2/2024
2:45:07 PM
...\PM\-061741_PM01.dgn

DATE REVISED	DATE REVISED	FED.RD. DIST.NO.	STATE	JOB NO.	SHEET NO.	TOTAL SHEETS
		6	ARK.	061741	60	136
		PERMANENT PAVEMENT MARKING DETAILS				

STATE OF ARKANSAS
REGISTERED PROFESSIONAL ENGINEER
No. 13832
RYAN W. CASTOR
05-02-2024

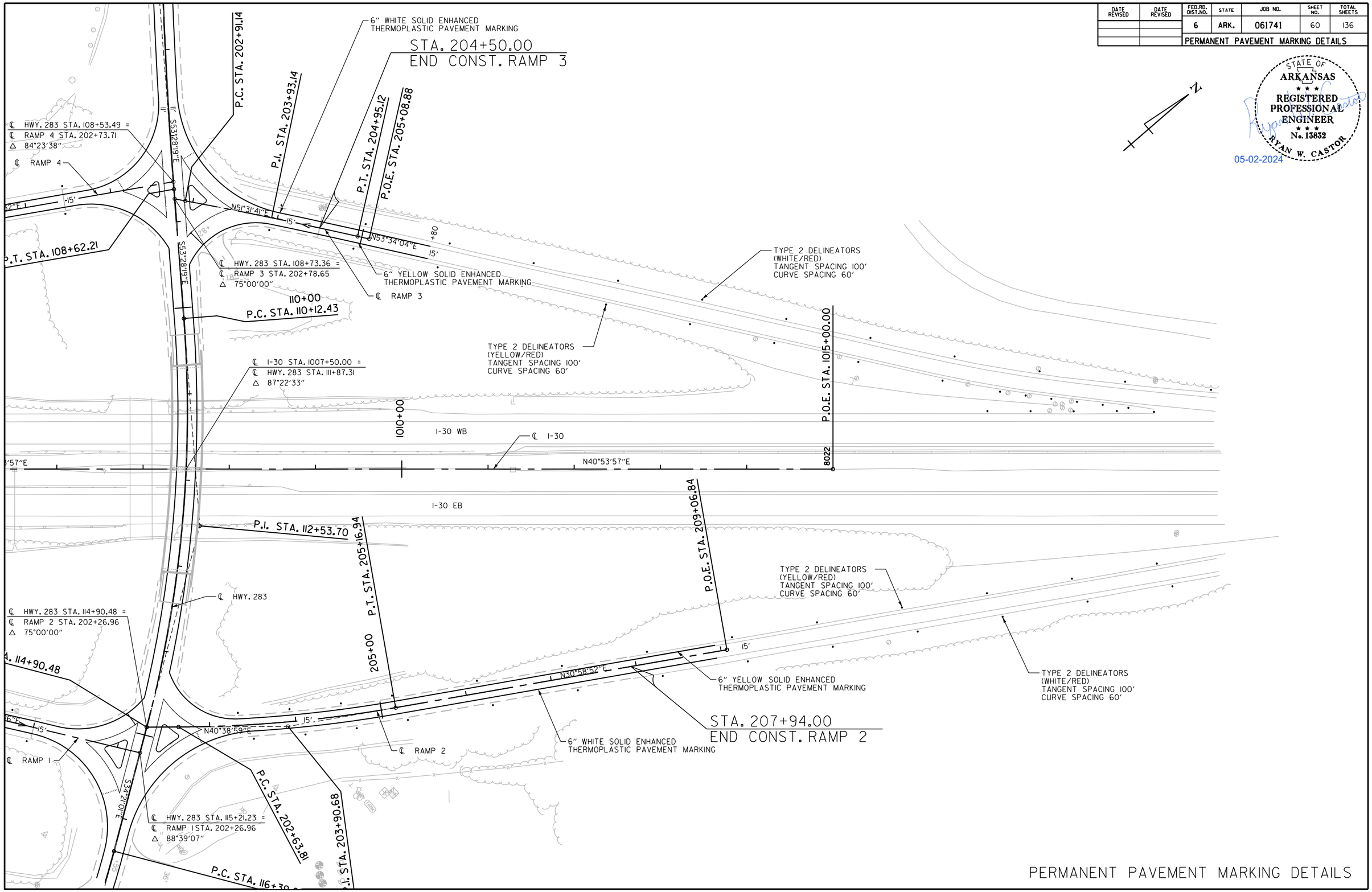

PERMANENT PAVEMENT MARKING DETAILS

5/2/2024
2:45:02 PM
...\PMR06174I_PM02.dgn

DATE REVISED	DATE REVISED	FED.RD. DIST.NO.	STATE	JOB NO.	SHEET NO.	TOTAL SHEETS
		6	ARK.	061741	61	136
		PERMANENT PAVEMENT MARKING DETAILS				

STATE OF ARKANSAS
REGISTERED PROFESSIONAL ENGINEER
No. 13832
RYAN W. CASTOR
05-02-2024

NOTES:

STATION AND OFFSETS LABELS ARE BASED ON HWY. 283 CENTERLINE ALIGNMENT.

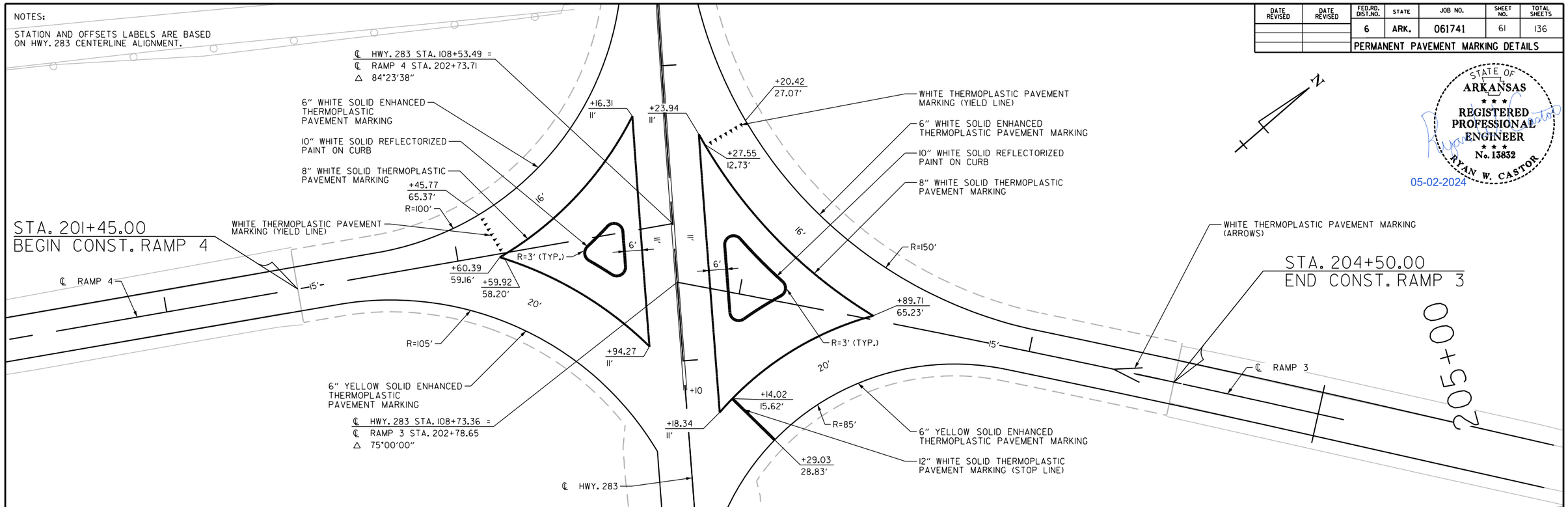

NOTES:

STATION AND OFFSETS LABELS ARE BASED ON HWY. 283 CENTERLINE ALIGNMENT.

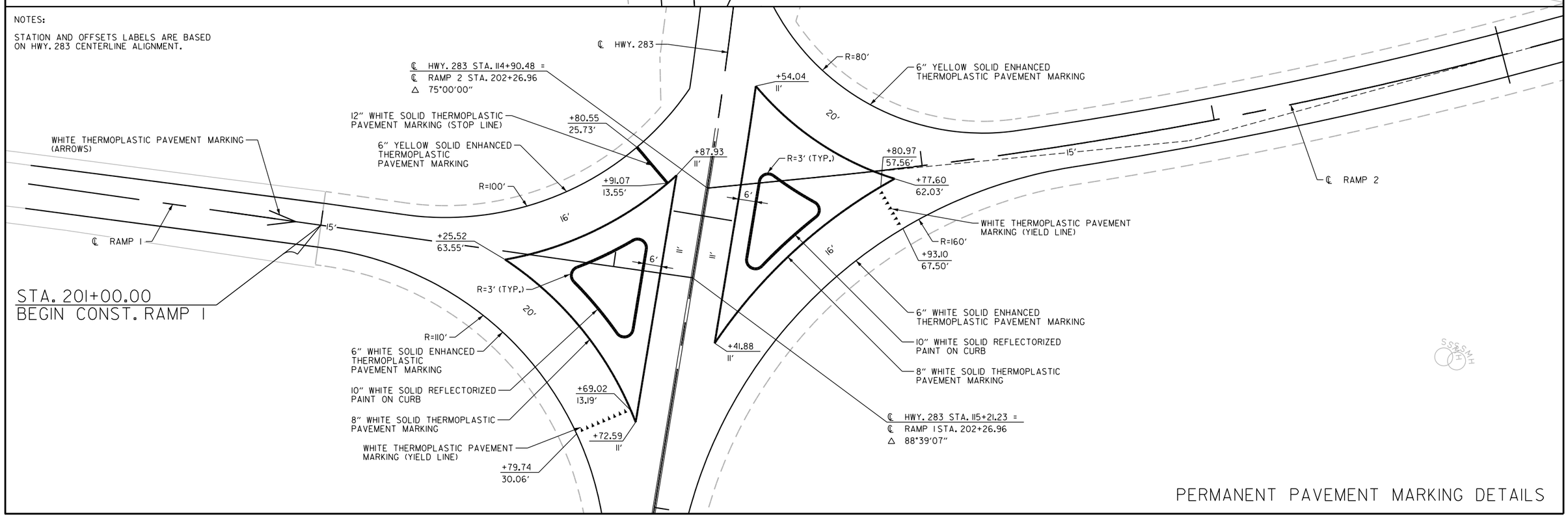

PERMANENT PAVEMENT MARKING DETAILS

5/2/2024
2:45:17 PM
...\PW\r06174I_PM03.dgn

DATE REVISED	DATE REVISED	FED.RD. DIST.NO.	STATE	JOB NO.	SHEET NO.	TOTAL SHEETS
		6	ARK.	061741	62	136
		QUANTITIES				

STATE OF ARKANSAS
REGISTERED PROFESSIONAL ENGINEER
No. 13832
RYAN W. CASTOR
05-02-2024

CONSTRUCTION PAVEMENT MARKINGS AND PERMANENT PAVEMENT MARKINGS

DESCRIPTION	STAGE 1 STEP 1	STAGE 1 STEP 2	STAGE 2 STEP 1	STAGE 2 STEP 2	STAGE 3 STEP 1	STAGE 3 STEP 2	STAGE 3 STEP 3	END OF JOB	REMOVAL OF PERMANENT PAVEMENT MARKINGS	CONSTRUCTION PAVEMENT MARKINGS	REMOVAL OF CONSTRUCTION PAVEMENT MARKINGS	RAISED PAVEMENT MARKERS TYPE II (YELLOW/YELLOW)	ENHANCED THERMOPLASTIC PAVEMENT MARKING 6" WHITE	ENHANCED THERMOPLASTIC PAVEMENT MARKING 6" YELLOW	THERMOPLASTIC PAVEMENT MARKING 6" WHITE	THERMOPLASTIC PAVEMENT MARKING 6" YELLOW	THERMOPLASTIC PAVEMENT MARKING 8" WHITE	THERMOPLASTIC PAVEMENT MARKING 12" WHITE	THERMOPLASTIC PAVEMENT MARKING ARROWS	THERMOPLASTIC PAVEMENT MARKING YIELD LINE	REFLECTORIZED PAINT PAVEMENT MARKING 10" WHITE	DELINEATORS (TYPE 2) WHITE/RED	DELINEATORS (TYPE 2) YELLOW/RED
	LIN. FT. - EACH								LIN. FT.		LIN. FT.	EACH	LIN. FT.						EACH	LIN. FT.	LIN. FT.	EACH	
REMOVAL OF PERMANENT PAVEMENT MARKINGS	5276		1972		1748				8996														
CONSTRUCTION PAVEMENT MARKINGS	5584	416	8936	727	9602	2104	1387			28756													
REMOVAL OF CONSTRUCTION PAVEMENT MARKINGS			4389	751	7188	2013	1332				15673												
RAISED PAVEMENT MARKERS TYPE II (YELLOW/YELLOW)								22				22											
ENHANCED THERMOPLASTIC PAVEMENT MARKING WHITE (6")								1775					1775										
ENHANCED THERMOPLASTIC PAVEMENT MARKING YELLOW (6")								1546						1546									
THERMOPLASTIC PAVEMENT MARKING WHITE (6")								2794							2794								
THERMOPLASTIC PAVEMENT MARKING YELLOW (6")								3324								3324							
THERMOPLASTIC PAVEMENT MARKING WHITE (8")								897									897						
THERMOPLASTIC PAVEMENT MARKING WHITE (12")								36										36					
THERMOPLASTIC PAVEMENT MARKING (ARROWS)																			2				
THERMOPLASTIC PAVEMENT MARKING (YIELD LINE)								4												68			
REFLECTORIZED PAINT PAVEMENT MARKING WHITE (10")								306													306		
DELINEATOR (TYPE 2) (WHITE/RED)																						57	
DELINEATOR (TYPE 2) (YELLOW/RED)																							57
TOTALS:									**8996**	**28756**	**15673**	**22**	**1775**	**1546**	**2794**	**3324**	**897**	**36**	**2**	**68**	**306**	**57**	**57**

NOTE: THIS IS A HIGH TRAFFIC VOLUME ROAD AS DEFINED IN SECTION 604.03, STANDARD SPECIFICATIONS FOR HIGHWAY CONSTRUCTION.

NOTE: NO PERMANENT PAVEMENT MARKINGS SHALL BE PLACED UNTIL A MINIMUM OF 3 DAYS AFTER ALL MAIN LANE PAVING HAS BEEN COMPLETED. IN ADDITION, NO PERMANENT PAVEMENT MARKINGS SHALL BE PLACED DURING THE TIME PERIOD FROM DECEMBER 21 TO MARCH 15, INCLUSIVE.

ADVANCE WARNING SIGNS AND DEVICES

SIGN NUMBER	DESCRIPTION	SIGN SIZE	STAGE 1 STEP 1	STAGE 1 STEP 2	STAGE 2 STEP 1	STAGE 2 STEP 2	STAGE 3 STEP 1	STAGE 3 STEP 2	STAGE 3 STEP 3	STAGE 4	MAXIMUM NUMBER REQUIRED	TOTAL SIGNS REQUIRED NO.	TOTAL SIGNS REQUIRED SQ. FT.	TRAFFIC DRUMS	BARRICADES (TYPE III) RIGHT	BARRICADES (TYPE III) LEFT	FURNISHING & INSTALLING PRECAST CONC. BARRIER	RELOCATING PRECAST CONCRETE BARRIER	TEMPORARY IMPACT ATTENUATION BARRIER	TEMP. IMPACT ATTEN.BARR. (REPAIR)	* ADVANCE WARNING ARROW PANEL	* PORTABLE CHANGEABLE MESSAGE SIGN	MOBILE SPEED NOTIFICATION SYSTEM (SPECIAL)
			LIN. FT. - EACH									NO.	SQ. FT.	EACH	LIN. FT.				EACH		DAY	WEEK	EACH
W20-1	ROAD WORK 1 MILE	48"x48"	4	4	4	4	4	4	4	4	4	4	64.0										
W20-1	ROAD WORK 1/2 MILE	48"x48"	4	4	4	4	4	4	4	4	4	4	64.0										
W20-1	ROAD WORK 1500 FT.	48"x48"	6	6	6	6	6	6	6	6	6	6	96.0										
W20-1	ROAD WORK 1000 FT.	48"x48"	4	4	4	4	4	4	4	4	4	4	64.0										
W20-1	ROAD WORK 500 FT.	48"x48"	2	2	2	2	2	2	2	2	2	2	32.0										
W20-1	ROAD WORK AHEAD	48"x48"	3	3	3	3	3	3	3	3	3	3	48.0										
W20-5	RIGHT LANE CLOSED 1 MILE	48"x48"	2	2	2	2	2	2	2	2	2	2	32.0										
W20-5	RIGHT LANE CLOSED 1/2 MILE	48"x48"	2	2	2	2	2	2	2	2	2	2	32.0										
W20-5	RIGHT LANE CLOSED 1500 FT.	48"x48"	2	2	2	2	2	2	2	2	2	2	32.0										
G20-2	END ROAD WORK	48"x24"	9	9	9	9	9	9	9	9	9	9	72.0										
G20-5aP	WORK ZONE	36"x24"	2	2	2	2	2	2	2	2	2	2	12.0										
W1-4AR	REVERSE CURVE RT.	36"x36"			3	4	1		1		4	4	36.0										
W1-4AL	REVERSE CURVE LT.	36"x36"			2	1	2	2			2	2	18.0										
W13-4P	ON RAMP	36"x36"	2	2	2	2	2	2	2	2	2	2	18.0										
W5-4	RAMP NARROWS	48"x48"	1	1	1	1	1	1	1		1	1	16.0										
R11-2	ROAD CLOSED	48"x30"			2	2	3	3	2		3	3	30.0										
R55-1	FINES DOUBLE IN WORK ZONE	36"x60"	4	4	4	4	4	4	4	4	4	4	60.0										
OM-3R	OBJECT MARKER	12"x36"	8	8	12	12	4	4	4		12	12	36.0										
OM-3L	OBJECT MARKER	12"x36"	4	4	8	8	4	4	4		8	8	24.0										
W1-6	LARGE ARROW	48"x24"					3	3	1		3	3	24.0										
W1-6	LARGE ARROW	60"x30"	6	6	6	6	6	6	6	6	6	6	75.0										
W3-5	REDUCED SPEED ZONE AHEAD	48"x48"	2	2	2	2	2	2	2	2	2	2	32.0										
W4-2 RT.	RT. LANE ENDS	48"x48"	2	2	2	2	2	2	2	2	2	2	32.0										
W5-1	ROAD NARROWS	36"x36"	2	2							2	2	18.0										
R2-1	SPEED LIMIT (A)	48"x60"	2	2	2	2	2	2	2	2	2	2	40.0										
R2-1	SPEED LIMIT (B)	48"x60"	2	2	2	2	2	2	2	2	2	2	40.0										
* R4-2	DO NOT PASS	24"x30"	2	2	2	2	2	2	2	2	2	2	10.0										
R4-1	DO NOT PASS	48"x60"	4	4	4	4	4	4	4	4	4	4	80.0										
R10-19aP	PHOTO ENFORCED	48"x36"	2	2	2	2	2	2	2	2	2	2	16.0										
* W21-5a	RIGHT SHOULDER CLOSED	36"x36"	4	4	4	4	4	4	4	4	4	4	36.0										
W21-5b	LEFT SHOULDER CLOSED	36"x36"	2	2	2	2	2	2	2	2	2	2	18.0										
* W8-1	BUMP	36"x36"	2	2	2	2	2	2	2	2	2	2	18.0										
W8-17	UNEVEN LANES	36"x36"			1	1					1	1	9.0										
WZ-1	NOTICE SPEED PHOTO ENFORCED WORK ZONE	84"x60"	4	4	4	4	4	4	4	4	4	4	140.0										
SPECIAL	MERGE NOW	48"x48"	1	1	1	1	1	1	1	1	1	1	16.0										
	TRAFFIC DRUMS		120	172	123	115	104	66	16	82	172			172									
	TYPE III BARRICADE-RT (16')				1	1	3	3	2		3				48								
	TYPE III BARRICADE-LT. (16')				1	1	3	3	2		3					48							
	FURNISHING AND INSTALLING PRECAST CONCRETE BARRIER		3059	3059	3259	3259	180	180	180	206	3259						3259						
	RELOCATING PRECAST CONCRETE BARRIER						180			100	180							180					
	TEMPORARY IMPACT ATTENUATION BARRIER		1	1	2	2	1	1	1	2	2								2				
	TEMPORARY IMPACT ATTENUATION BARRIER (REPAIR)		1	1	2	2	1	1	1	2	2									2			
	ADVANCE WARNING ARROW PANEL		2	2	2	2	2	2	2	2	2										40		
	PORTABLE CHANGEABLE MESSAGE SIGN		2	2	2	2	2	2	2	2	2											4	
	MOBILE SPEED NOTIFICATION SYSTEM (SPECIAL)		2	2	2	2	2	2	2	2	2												2
*	IF AND WHERE DIRECTED BY THE ENGINEER													94									
TOTALS:													**1390.0**	**266**	**48**	**48**	**3259**	**180**	**2**	**2**	**40**	**4**	**2**

NOTE: THIS IS A HIGH TRAFFIC VOLUME ROAD AS DEFINED IN SECTION 604.03, STANDARD SPECIFICATIONS FOR HIGHWAY CONSTRUCTION.

* QUANTITY ESTIMATED.
SEE SECTION 104.03 CF THE STD. SPECS.
TO BE USED IF AND WHERE DIRECTED BY THE ENGINEER.

5/2/2024
2:45:27 PM
...\Road_Sheets\OTr06174I_QT01

DATE REVISED	DATE REVISED	FED.RD. DIST.NO.	STATE	JOB NO.	SHEET NO.	TOTAL SHEETS
		6	ARK.	061741	63	136
		QUANTITIES				

STATE OF ARKANSAS
REGISTERED PROFESSIONAL ENGINEER
No. 13832
RYAN W. CASTOR
05-02-2024

EROSION CONTROL

STATION	STATION	LOCATION	PERMANENT EROSION CONTROL SEEDING	LIME	MULCH COVER	WATER	SECOND SEEDING APPLICATION	TEMPORARY EROSION CONTROL TEMPORARY SEEDING	MULCH COVER	WATER	SAND BAG DITCH CHECKS (E-5)	ROCK DITCH CHECKS (E-6)	SILT FENCE (E-11)	*SEDIMENT REMOVAL & DISPOSAL
			ACRE	TON	ACRE	M.GAL.	ACRE	ACRE	ACRE	M.GAL.	BAG	CU.YD.	LIN. FT.	CU. YD.
ENTIRE	PROJECT	CLEARING AND GRUBBING						9.07	9.07	185.0		138	1508	105
ENTIRE	PROJECT	STAGE 1						3.10	3.10	63.2		9		3
ENTIRE	PROJECT	STAGE 2						1.31	1.31	26.7		9	190	10
ENTIRE	PROJECT	STAGE 3	8.82	17.64	8.82	899.6	8.82					6		2
*ENTIRE PROJECT TO BE USED IF AND WHERE DIRECTED BY THE ENGINEER.			2.20	4.40	2.20	224.4	2.20	3.50	3.50	71.4	176	45	450	40
TOTALS:			**11.02**	**22.04**	**11.02**	**1124.0**	**11.02**	**16.98**	**16.98**	**346.3**	**176**	**207**	**2238**	**160**

BASIS OF ESTIMATE:
LIME .....2 TONS / ACRE OF SEEDING
WATER.....102.0 M.G. / ACRE OF SEEDING
WATER.....20.4 M.G. / ACRE OF TEMPORARY SEEDING
SAND BAG DITCH CHECKS.....22 BAGS / LOCATION
ROCK DITCH CHECKS.....3 CU.YD./LOCATION

*QUANTITIES ESTIMATED.
SEE SECTION 104.03 OF THE STD. SPECS.

NOTE: THE TEMPORARY EROSION CONTROL DEVICES SHOWN ABOVE AND ON THE PLANS SHALL BE INSTALLED IN SUCH A SEQUENCE AS TO DETER EROSION AND SEDIMENTATION ON U.S. WATERWAYS AS EXPLAINED BY THE NATIONAL POLLUTANT DISCHARGE ELIMINATION SYSTEM PERMIT.

CLEARING AND GRUBBING

STATION	STATION	LOCATION	CLEARING	GRUBBING
			STATION	
100+00	119+00	HWY. 283 LT. & RT.	19	19
202+00	209+00	RAMP 2 LT. & RT.	7	7
TOTALS:			**26**	**26**

BENCH MARKS

STATION	LOCATION	BENCH MARKS
		EACH
110+66	HWY. 283 - BRIDGE END	1
TOTAL:		**1**

NOTE: SHOWN FOR INFORMATION ONLY. BENCH MARKS SHALL BE FURNISHED AND PLACED BY STATE FORCES.

EARTHWORK

STATION	STATION	LOCATION / DESCRIPTION	UNCLASSIFIED EXCAVATION	COMPACTED EMBANKMENT
			CU. YD.	
ENTIRE	PROJECT	STAGE 1-HWY. 283	327	1088
ENTIRE	PROJECT	STAGE 2-HWY. 283	843	1069
ENTIRE	PROJECT	STAGE 3-HWY. 283	5572	307
ENTIRE	PROJECT	APPROACHES		79
ENTIRE	PROJECT	STAGE 1 - RAMP 1	40	
ENTIRE	PROJECT	STAGE 3 STEP 1 - RAMP 1	111	3
ENTIRE	PROJECT	STAGE 3 STEP 2 - RAMP 1	306	
ENTIRE	PROJECT	STAGE 1 - RAMP 2	303	31
ENTIRE	PROJECT	STAGE 2 - RAMP 2	217	1702
ENTIRE	PROJECT	STAGE 3 - RAMP 2	1875	1459
ENTIRE	PROJECT	STAGE 1 - RAMP 3	72	3
ENTIRE	PROJECT	STAGE 2 STEP 1 - RAMP 3	208	202
ENTIRE	PROJECT	STAGE 2 STEP 2 - RAMP 3	75	2
ENTIRE	PROJECT	STAGE 1 - RAMP 4	69	
ENTIRE	PROJECT	STAGE 3 STEP 1 - RAMP 4	34	
ENTIRE	PROJECT	STAGE 3 STEP 2 - RAMP 4	385	
ENTIRE	PROJECT	STAGE 3 STEP 3 - RAMP 4	146	3
ENTIRE	PROJECT	I-30	449	14
110+66.22	113+08.39	BR. 07680	1666	
TOTALS:			**12698**	**5962**

NOTE: EARTHWORK QUANTITIES SHALL BE PAID AS PLAN QUANTITY.

REMOVAL AND DISPOSAL OF ITEMS

STATION	STATION	LOCATION	CURB	WIRE ROPE SAFETY FENCE	CONCRETE PAVEMENT	CONCRETE ISLANDS	CONCRETE PIER PROTECTION	SIGN FOUNDATIONS	GUARDRAIL	SIGNS	CONCRETE DITCH PAVING
			LIN. FT.	LIN. FT.	SQ. YD.	SQ. YD.	LIN. FT.	EACH	LIN. FT.	EACH	SQ. YD.
108+50	108+82	HWY. 283 RT. (EXIST. HWY. 283 LT.)	87			42					
108+45	108+76	HWY. 283 RT. (EXIST. HWY. 283 RT.)	84			39					
114+93	115+35	HWY. 283 LT.	119			75					
115+08	115+48	HWY. 283 RT.	108			62					
101+89		HWY. 283 RT.								2	
105+66		HWY. 283 RT.								1	
106+18		HWY. 283 LT.								1	
106+94		HWY. 283 RT.								1	
108+33		HWY. 283 LT.						2		1	
108+75		HWY. 283 RT.								1	
109+47		HWY. 283 RT.								1	
109+62		HWY. 283 RT.								2	
113+29		HWY. 283 RT.								1	
113+37		HWY. 283 RT.								1	
114+42		HWY. 283 RT.								2	
114+77		HWY. 283 RT.								1	
115+02		HWY. 283 LT.						1			
115+21		HWY. 283 RT.								1	
116+34		HWY. 283 LT.								2	
116+79		HWY. 283 LT.								1	
201+77		RAMP 1 RT.								1	
202+73		RAMP 2 RT.								1	
201+91		RAMP 4 LT.								1	
202+12		RAMP 4 RT.						1		1	
202+28		RAMP 4 LT.						2		2	
109+34	110+34	HWY. 283 RT.							100		
109+38	110+38	HWY. 283 RT.							100		
113+25	114+25	HWY. 283 RT.							100		
113+34	114+34	HWY. 283 RT.							100		
1007+37	1009+87	I-30 WB LT.							250		
1005+57	1006+82	I-30 WB RT.							125		
1007+13	1010+85	I-30 WB RT.							370		
1003+10	1006+81	I-30 EB LT.							370		
1007+15	1008+39	I-30 EB LT.							125		
1004+08	1006+81	I-30 EB RT.							275		
201+00	201+99	RAMP 1			267						
202+31	207+94	RAMP 2			1007						
202+79	204+50	RAMP 3			400						
201+45	202+17	RAMP 4			200						
1004+34.57	1005+45.56	I-30 WB RT.									44
1010+98.02	1012+29.50	I-30 WB RT.									50
1006+81		I-30 EB RT.					30				
1006+82		I-30 WB LT.					30				
1006+86		MEDIAN					40				
1005+95	1006+08	I-30 WB RT.		13							
1007+88	1010+70	I-30 WB RT.		282							
TOTALS:			**398**	**295**	**1874**	**218**	**100**	**6**	**1915**	**25**	**94**

NOTE: THE QUANTITY SHOWN ABOVE FOR THE REMOVAL AND DISPOSAL OF GUARDRAIL SHALL INCLUDE THE REMOVAL AND DISPOSAL OF ALL GUARDRAIL TERMINALS AND TERMINAL ANCHOR POSTS.

CONCRETE DITCH PAVING

STATION	STATION	LOCATION	LENGTH	"W"	CONC. DITCH PAVING (TYPE B)	SOLID SODDING	WATER
			LIN. FT.	FEET	SQ. YD.	SQ. YD.	M. GAL.
110+28.00	110+28.00	HWY. 283 RT.	29.84	6.00	19.89	13.26	0.17
113+46.00	113+46.00	HWY. 283 RT.	7.98	6.00	5.32	3.55	0.04
1004+34.57	1005+34.57	I-30 WB RT.	100.00	4.00	37.00	44.44	0.56
1011+29.57	1012+29.57	I-30 WB RT.	100.00	4.00	38.38	44.44	0.56
TOTALS:					**100.59**	**105.69**	**1.33**

BASIS OF ESTIMATE:
WATER.....12.6 GAL. / SQ. YD. OF SOLID SODDING.

FENCING

STATION	STATION	LOCATION	WIRE FENCE (TYPE C)
			LIN. FT.
103+15	108+01	HWY. 283 LT.	490
TOTAL:			**490**

MAILBOXES

LOCATION	MAILBOXES	MAILBOX SUPPORTS (SINGLE)
		EACH
ENTIRE PROJECT	1	1
TOTALS:	**1**	**1**

SOIL STABILIZATION

STATION	STATION	LOCATION / DESCRIPTION	SOIL STABILIZATION
			TON
ENTIRE	PROJECT	TO BE USED IF AND WHERE DIRECTED BY THE ENGINEER	200
TOTAL:			**200**

QUANTITY ESTIMATED.
SEE SECTION 104.03 OF THE STD. SPECS.

GUARDRAIL

STATION	STATION	LOCATION	GUARDRAIL (TYPE A)	THRIE BEAM GUARDRAIL TERMINAL	TERMINAL ANCHOR POST (TYPE 1)	GUARDRAIL TERMINAL (TYPE 2)
			LIN. FT.	EACH		
109+37.74	110+56.49	HWY. 283 RT.	50	1		1
109+57.45	110+51.20	HWY. 283 LT.	25	1		1
113+19.79	114+38.54	HWY. 283 RT.	50	1		1
113+21.74	114+15.49	HWY. 283 LT.	25	1		1
1007+01.50	1010+26.50	I-30 WB LT.	275		1	1
1005+44.57	1011+19.57	I-30 WB RT.	525		1	1
1003+73.89	1008+73.89	I-30 EB LT.	450		1	1
1004+14.52	1007+89.52	I-30 EB RT.	325		1	1
TOTALS:			**1725**	**4**	**4**	**8**

CULVERT CLEAN OUT

STATION	LOCATION	EACH
101+14	HWY. 283 CROSSING	1
116+55	HWY. 283 LT. SIDE DRAIN	1
208+83	RAMP 2 CROSSING	1
TOTAL:		**3**

REMOVAL AND DISPOSAL OF FENCE

STATION	STATION	LOCATION	FENCE
			LIN. FT.
103+15	108+01	HWY. 283 LT.	490
TOTAL:			**490**

WIRE ROPE SAFETY FENCE

STATION	STATION	LOCATION	WIRE ROPE SAFETY FENCE - REMOVE AND RECONSTRUCT	WIRE ROPE SAFETY FENCE (POST REPAIR)	TEMPORARY TERMINAL ANCHOR FOR WIRE ROPE SAFETY FENCE
			LIN. FT.	EACH	EACH
1004+35	1005+95	I-30 WESTBOUND RT.	160		
1010+70	1012+30	I-30 WESTBOUND RT.	160		
* ENTIRE PROJECT TO BE USED IF AND WHERE DIRECTED BY THE ENGINEER.				20	2
TOTALS:			**320**	**20**	**2**

* NOTE: QUANTITY ESTIMATED.
SEE SECTION 104.03 OF THE STD. SPECS.
TO BE USED IF AND WHERE DIRECTED BY THE ENGINEER.

5/2/2024
2:45:39 PM
...\Road_Sheets\QT\r061741_QT01

DATE REVISED	DATE REVISED	FED.RD. DIST.NO.	STATE	JOB NO.	SHEET NO.	TOTAL SHEETS
		6	ARK.	061741	64	136
		QUANTITIES				

STATE OF ARKANSAS
REGISTERED PROFESSIONAL ENGINEER
No. 13832
RYAN W. CASTOR
05-02-2024

DUMPED RIPRAP AND FILTER BLANKET

STATION	LOCATION	DUMPED RIPRAP	FILTER BLANKET
		CU. YD.	SQ. YD.
110+28	HWY. 283 RT.	9	18
113+46	HWY. 283 RT.	9	18
*	TO BE USED IF AND WHERE DIRECTED BY THE ENGINEER	9	18
TOTALS:		27	54

*NOTE: QUANTITY ESTIMATED.
SEE SECTION 104.03 OF THE STANDARD SPECIFICATIONS

NOTE: FILTER BLANKET SHALL BE GEOTEXTILE FABRIC (TYPE 5).

CONCRETE ISLAND

STATION	LOCATION	CURB FACE TYPE	CONCRETE ISLAND
			SQ. YD.
108+62	HWY. 283 RT.	C	18
108+80	HWY. 283 LT.	C	39
114+90	HWY. 283 LT.	C	48
115+28	HWY. 283 RT.	C	53
TOTAL:			158

COLD MILLING ASPHALT PAVEMENT

STATION	STATION	LOCATION	AVG. WIDTH	COLD MILLING ASPHALT PAVEMENT
			FEET	SQ. YD.
101+00.00	102+00.00	HWY. 283	30.00	333.33
116+39.26	117+39.26	HWY. 283	30.00	333.33
TOTAL:				666.66

NOTE: COORDINATE COLD MILLING STOCKPILE LOCATIONS WITH DISTRICT ENGINEER.
STOCKPILE LOCATIONS SHALL BE NO FURTHER THAN 5 MILES FROM EACH SITE.

ACHM PATCHING OF EXISTING ROADWAY

DESCRIPTION	TON
ENTIRE PROJECT - TO BE USED IF AND WHERE DIRECTED BY THE ENGINEER	10
TOTAL:	10

NOTE: QUANTITY ESTIMATED.
SEE SECTION 104.03 OF THE STD. SPECS.

ASPHALT CONCRETE PATCHING FOR MAINTENANCE OF TRAFFIC

LOCATION	TON	TACK COAT
		GALLON
ENTIRE PROJECT - TO BE USED IF AND WHERE DIRECTED BY THE ENGINEER	10	20
TOTALS:	10	20

BASIS OF ESTIMATE:
ASPHALT CONCRETE PATCHING FOR MAINTENANCE OF TRAFFIC…25 TON/MILE
TACK COAT FOR MAINTENANCE OF TRAFFIC……..50 GAL./MILE
NOTE: QUANTITY ESTIMATED.
SEE SECTION 104.03 OF THE STD. SPECS.

RUMBLE STRIPS IN ASPHALT SHOULDERS

STATION	STATION	LOCATION	* RUMBLE STRIPS IN ASPHALT SHOULDERS
			LIN. FT.
101+00	117+39	HWY. 283 LT. & RT.	1088
TOTAL:			1088

* QUANTITY ESTIMATED.
SEE SECTION 104.03 OF THE STD. SPECS.
TO BE USED IF AND WHERE DIRECTED BY THE ENGINEER.

DRIVEWAYS

STATION	SIDE	LOCATION	WIDTH	ACHM SURFACE COURSE (1/2") 220 LBS. PER SQ. YD. (PG 64-22)		AGGREGATE BASE COURSE (CLASS 7)	SIDE DRAINS	STANDARD DRAWINGS
							22"X14"	
			FEET	SQ. YD.	TON	TON	LIN. FT.	
105+11	RT.	HWY. 283	20	98.87	10.88	40.37		DR-2
116+55	LT.	HWY. 283	36	247.00	27.17	100.86		DR-2
202+82	RT.	RAMP 3	18	98.66	10.85	40.29	29	DR-2, PCC-1, PCM-1
* ENTIRE PROJECT TEMPORARY DRIVES						30.00		
TOTALS:				444.53	48.90	211.52	29	

BASIS OF ESTIMATE:
ACHM SURFACE COURSE (1/2") (PG 64-22).....94.3% MIN. AGGR.....5.7% ASPHALT BINDER

* QUANTITY ESTIMATED
SEE SECTION 104.03 OF THE STD. SPECS.
TO BE USED IF AND WHERE DIRECTED BY THE ENGINEER.

NOTE: FOR R.C. PIPE CULVERT INSTALLATIONS USE TYPE 3 BEDDING UNLESS OTHERWISE SPECIFIED.
NOTE: FOR C.M. PIPE CULVERT INSTALLATIONS USE TYPE 2 BEDDING UNLESS OTHERWISE SPECIFIED.

APPROACH GUTTERS AND SLABS

STATION	STATION	LOCATION	APPROACH GUTTER (TYPE F)	APPROACH SLABS (TYPE F)	REINFORCING STEEL-RDWY. (GR. 60)	AGGREGATE BASE CRS. (CLASS 7)
			CU. YD.	CU. YD.	POUND	TON
110+31.22	110+66.22	BEGIN BRIDGE NO. 07680	8.20	59.30	7660	41.48
113+08.39	113+43.39	END BRIDGE NO. 07680	8.20	59.30	7660	41.48
TOTALS:			16.40	118.60	15320	82.96

PCCP PATCHING

LOCATION	* REM. & DISP. CONC. PVMT. FOR PATCHING	* P.C.C.P. PATCHING (8" U.T.)
	SQ. YD.	SQ. YD.
ENTIRE PROJECT - TO BE USED IF AND WHERE DIRECTED BY THE ENGINEER	140	140
TOTALS:	140	140

NOTE: IN ACCORDANCE WITH THE STANDARD SPECIFICATIONS, HIGH EARLY STRENGTH CONCRETE PAVEMENT SHALL BE USED FOR P.C.C.P. PATCHING (8" U.T.) TO REDUCE THE AMOUNT OF TIME NEEDED FOR LANE CLOSURES.

* QUANTITY ESTIMATED.
SEE SECTION 104.03 OF THE STD. SPECS.

4" PIPE UNDERDRAIN

STATION	STATION	LOCATIONS	4" PIPE UNDERDRAINS	UNDERDRAIN OUTLET PROTECTORS
			LIN. FT.	EACH
* ENTIRE PROJECT TO BE USED IF AND WHERE DIRECTED BY THE ENGINEER			2000	8
TOTALS:			2000	8

* NOTE: QUANTITY ESTIMATED.
SEE SECTION 104.03 OF THE STD. SPECS.

JOINT SUPPORT

STATION	STATION	LOCATION	LENGTH	AVG. WID.	DEPTH	CLASS S CONCRETE - ROADWAY
			LIN. FT.	FEET	INCH	CU. YD.
200+97.00	201+00.00	RAMP 1	3.00	15.00	12.00	1.67
207+94.00	207+97.00	RAMP 2	3.00	15.00	12.00	1.67
204+50.00	204+53.00	RAMP 3	3.00	15.00	12.00	1.67
201+42.00	201+45.00	RAMP 4	3.00	15.00	12.00	1.67
TOTAL:						6.68

5/2/2024
2:45:37 PM
...\Road_Sheets\QT\r061741_QT01

DATE REVISED	DATE REVISED	FED.RD. DIST.NO.	STATE	JOB NO.	SHEET NO.	TOTAL SHEETS
		6	ARK.	061741	65	136
		QUANTITIES				

STATE OF ARKANSAS
REGISTERED PROFESSIONAL ENGINEER
No. 13832
RYAN W. CASTOR
05-02-2024

BASE AND SURFACING

STATION	STATION	LOCATION	LENGTH	AGGREGATE BASE COURSE (CLASS 7)		TACK COAT							ACHM BINDER COURSE (1")					ACHM SURFACE COURSE (1/2")											
						(0.05 GAL. PER SQ. YD.)			(0.17 GAL. PER SQ. YD.)																				
			FEET	TON / STATION	TON	TOTAL WID. FEET	SQ. YD.	GALLON	TOTAL WID. FEET	SQ. YD.	GALLON	TOTAL GALLONS	AVG. WID. FEET	SQ. YD.	POUND / SQ. YD.	PG 64-22 TON	PG 76-22 TON	AVG. WID. FEET	SQ. YD.	POUND / SQ. YD.	PG 64-22 TON	PG 76-22 TON	AVG. WID. FEET	SQ. YD.	POUND / SQ. YD.	PG 64-22 TON	PG 76-22 TON	TOTAL PG 64-22 TON	TOTAL PG 76-22 TON
MAIN LANES																													
101+00.00	102+00.00	HWY. 283 MILL & OVERLAY TRANSITION	100.00						30.00	333.33	56.67	56.67											30.00	333.33	220.00	36.67		36.67	
102+00.00	107+02.64	HWY. 283 NOTCH & WIDEN	502.64	VAR.	730.08	15.17	847.23	42.36				42.36	7.64	426.69	330.00	70.40		7.53	420.54	220.00	46.26		30.00	1675.47	220.00	184.30		230.56	
107+02.64	110+31.22	HWY. 283 FULL DEPTH	328.58	202.00	663.73	44.71	1632.31	81.62				81.62	22.46	819.99	330.00	135.30		22.25	812.32	220.00	89.36		30.00	1095.27	220.00	120.48		209.84	
113+43.39	114+28.96	HWY. 283 FULL DEPTH	85.57	202.00	172.85	44.71	425.09	21.25				21.25	22.46	213.54	330.00	35.23		22.25	211.55	220.00	23.27		30.00	285.23	220.00	31.38		54.65	
114+28.96	116+39.26	HWY. 283 NOTCH & WIDEN	210.30	VAR.	308.62	15.94	372.46	18.62				18.62	8.02	187.40	330.00	30.92		7.92	185.06	220.00	20.36		30.00	701.00	220.00	77.11		97.47	
116+39.26	117+39.26	HWY. 283 MILL & OVERLAY TRANSITION	100.00						30.00	333.33	56.67	56.67											30.00	333.33	220.00	36.67		36.67	
201+00.00	201+03.16	RAMP 1 FULL DEPTH	3.16	175.75	5.55	30.71	10.78	0.54				0.54	15.46	5.43	330.00		0.90	15.25	5.35	220.00		0.59	25.00	8.78	220.00		0.97		1.56
201+03.16	202+15.96	RAMP 1 RETURNS FULL DEPTH	112.80	318.75	359.55	103.69	1299.58	64.98				64.98	51.90	650.48	330.00		107.33	51.79	649.10	220.00		71.40	65.10	797.92	220.00		87.77		159.17
202+38.34	203+50.25	RAMP 2 RETURNS FULL DEPTH	111.91	321.50	359.79	105.09	1306.74	65.34				65.34	52.60	654.05	330.00		107.92	52.49	652.68	220.00		71.79	66.66	790.88	220.00		87.00		158.79
203+50.25	207+94.00	RAMP 2 FULL DEPTH	443.75	175.75	779.89	30.71	1514.17	75.71				75.71	15.46	762.26	330.00		125.77	15.25	751.91	220.00		82.71	25.00	1232.64	220.00		135.59		2[illegible]8.30
202+90.04	204+01.47	RAMP 3 RETURNS FULL DEPTH	111.43	333.00	371.06	110.97	1373.93	68.70				68.70	55.54	687.65	330.00		113.46	55.43	686.28	220.00		75.49	69.49	812.36	220.00		89.36		164.85
204+01.47	204+50.00	RAMP 3 FULL DEPTH	48.53	175.75	85.29	30.71	165.60	8.28				8.28	15.46	83.36	330.00		13.75	15.25	82.23	220.00		9.05	25.00	134.81	220.00		14.83		23.88
201+45.00	201+57.34	RAMP 4 FULL DEPTH	12.34	175.75	21.69	30.71	42.11	2.11				2.11	15.46	21.20	330.00		3.50	15.25	20.91	220.00		2.30	25.00	34.28	220.00		3.77		6.07
201+57.34	202+62.65	RAMP 4 RETURNS FULL DEPTH	105.31	312.00	328.57	100.21	1172.57	58.63				58.63	50.16	586.93	330.00		96.84	50.05	585.64	220.00		64.42	63.11	685.46	220.00		75.40		139.82
ADDITIONAL FOR GRADE RAISE																													
102+00.00	107+02.64	HWY. 283 LEVELING	502.64			14.47	808.13	40.41	14.47	808.13	137.38	177.79											14.47	755.13	VAR.	41.53		41.53	
114+28.96	116+39.26	HWY. 283 LEVELING	210.30			14.08	329.00	16.45	14.08	329.00	55.93	72.38											14.08	276.00	VAR.	15.18		15.18	
102+40.00	107+02.64	HWY. 283 METHOD OF RAISING GRADE	462.64			14.47	743.82	37.19	14.47	743.82	126.45	163.64						14.47	743.82	VAR.	122.73							122.73	
114+28.96	115+60.00	HWY. 283 METHOD OF RAISING GRADE	131.04			28.16	410.01	20.50	14.08	205.00	34.85	55.35	14.08	205.00	VAR.	33.83		14.08	205.00	VAR.	11.28							11.28	
ADDITIONAL FOR FULL DEPTH SHOULDERS																													
201+00.00	202+17.08	RAMP 1 LT.	117.08	-15.50	-18.15	8.42	109.53	5.48				5.48	4.29	55.81	330.00		9.21	4.13	53.73	220.00		5.91							5.91
202+38.34	203+50.25	RAMP 2 RETURN RT.	111.91	-23.25	-26.02	21.48	267.09	13.35				13.35	10.82	134.54	330.00		22.20	10.66	132.55	220.00		14.58							14.58
203+50.25	207+94.00	RAMP 2 RT.	443.75	-23.25	-103.17	12.42	612.38	30.62				30.62	6.29	310.13	330.00		51.17	6.13	302.24	220.00		33.25							33.25
203+63.62	204+50.00	RAMP 3 LT.	86.38	-23.25	-20.08	12.42	119.20	5.96				5.96	6.29	60.37	330.00		9.96	6.13	58.83	220.00		6.47							6.47
201+45.00	201+57.34	RAMP 4 RT.	12.34	-15.50	-1.91	8.42	11.54	0.58				0.58	4.29	5.88	330.00		0.97	4.13	5.66	220.00		0.62							0.62
201+57.34	202+46.13	RAMP 4 RETURN RT.	88.79	-15.50	-13.76	11.49	113.36	5.67				5.67	5.82	57.42	330.00		9.47	5.67	55.94	220.00		6.15							6.15
ADDITIONAL FOR GUARDRAIL & TEMPORARY WIDENING																													
109+20.22	110+56.49	HWY. 283 RT.	136.27	18.00	24.53																		6.02	91.15	220.00	10.03		10.03	
109+42.35	110+51.20	HWY. 283 LT.	108.85	17.50	19.05																		5.96	72.08	220.00	7.93		7.93	
113+19.79	114+65.52	HWY. 283 RT.	145.73	19.00	27.69																		6.18	100.07	220.00	11.01		11.01	
113+21.74	114+30.79	HWY. 283 LT.	109.05	17.75	19.36																		5.97	72.34	220.00	7.96		7.96	
1003+30.89	1009+16.89	I-30 EB LT.	586.00	33.25	194.85																		7.04	458.38	220.00	50.42		50.42	
1003+71.52	1008+32.52	I-30 EB RT.	461.00	25.00	115.25																		4.97	254.57	220.00	28.00		28.00	
1004+86.57	1011+77.57	I-30 WB RT.	691.00	38.50	266.04																		8.41	645.70	220.00	71.03		71.03	
1006+58.50	1010+69.50	I-30 WB LT.	411.00	26.50	108.92																		5.36	244.77	220.00	26.92		26.92	
100+40.00	108+03.59	HWY. 283 TEMPORARY WIDENING RT.	763.59	39.50	301.62	VAR.	638.87	31.94				31.94	VAR.	638.87	330.00	105.41							VAR.	626.14	220.00	68.88		68.88	
113+41.52	114+89.47	HWY. 283 TEMPORARY WIDENING RT.	147.95	44.25	65.47	VAR.	143.84	7.19				7.19	VAR.	143.84	330.00	23.73							VAR.	141.37	220.00	15.55		15.55	
115+84.84	116+80.87	HWY. 283 TEMPORARY WIDENING RT.	96.03	53.75	51.62	VAR.	119.82	5.99				5.99	VAR.	119.82	330.00	19.77							VAR.	118.22	220.00	13.00		13.00	
200+00.00	202+04.37	RAMP 1 TEMPORARY WIDENING RT.	204.37	38.50	78.68	VAR.	164.86	8.24				8.24	VAR.	164.86	330.00	27.20							VAR.	161.45	220.00	17.76		17.76	
200+00.00	201+44.29	RAMP 1 TEMPORARY WIDENING LT.	144.29	25.75	37.15	VAR.	64.45	3.22				3.22	VAR.	64.45	330.00	10.63							VAR.	62.04	220.00	6.82		6.82	
202+32.43	208+94.00	RAMP 2 TEMPORARY WIDENING LT.	661.57	57.25	378.75	VAR.	887.97	44.40				44.40	VAR.	887.97	330.00	146.52							VAR.	876.95	220.00	96.46		96.46	
202+47.85	206+27.05	RAMP 2 TEMPORARY WIDENING RT.	379.20	22.75	86.27	VAR.	136.09	6.80				6.80	VAR.	136.09	330.00	22.45							VAR.	129.77	220.00	14.27		14.27	
202+78.65	205+39.08	RAMP 3 TEMPORARY WIDENING RT.	260.43	51.00	132.82	VAR.	302.97	15.15				15.15	VAR.	302.97	330.00	49.99							VAR.	298.63	220.00	32.85		32.85	
199+70.00	201+87.16	RAMP 4 TEMPORARY WIDENING LT.	217.16	39.75	86.32	VAR.	182.90	9.15				9.15	VAR.	182.90	330.00	30.18							VAR.	179.28	220.00	19.72		19.72	
199+70.00	201+45.00	RAMP 4 TEMPORARY WIDENING RT.	175.00	26.75	46.81	VAR.	82.64	4.13				4.13	VAR.	82.64	330.00	13.64							VAR.	79.72	220.00	8.77		8.77	
ADDITIONAL FOR SUPERELEVATION																													
108+62.43	110+62.43	HWY. 283 SUPERELEVATION TRANSITION	200.00	22.63	45.26																								
110+62.43	110+66.22	HWY. 283 MAX SUPERELEVATION (0.052'/')	3.79	45.25	1.71																								
113+08.39	116+39.26	HWY. 283 MAX SUPERELEVATION (0.052'/')	330.87	45.25	149.72																								
TOTALS:					**6241.47**		**16411.04**	**820.56**		**2752.61**	**467.95**	**1288.51**		**8652.54**		**755.20**	**672.45**		**6621.34**		**313.26**	**444.73**		**14564.52**		**1050.70**	**494.69**	**1363.96**	**939.42**

BASIS OF ESTIMATE:
ACHM SURFACE COURSE (1/2") (PG 64-22).....94.3% MIN. AGGR.....5.7% ASPHALT BINDER
ACHM BINDER COURSE (1") (PG 64-22).....95.8% MIN. AGGR.....4.2% ASPHALT BINDER
ACHM SURFACE COURSE (1/2") (PG 76-22).....94.4% MIN. AGGR.....5.6% ASPHALT BINDER
ACHM BINDER COURSE (1") (PG 76-22).....95.9% MIN. AGGR.....4.1% ASPHALT BINDER
TACK COAT QUANTITIES WERE CALCULATED USING THE EMULSIFIED ASPHALT RATES. REFER TO SS-400-1 FOR THE RESIDUAL ASPHALT APPLICATION RATES.

5/2/2024
2:45:41 PM
...\Road_Sheets\QT\r061741_QT01

DATE REVISED	DATE REVISED	FED. RD. DIST. NO.	STATE	JOB NO.	SHEET NO.	TOTAL SHEETS
		6	ARK.	061741	66	136
		07680 -		QUANTITIES		- 67304

SCHEDULE OF BRIDGE QUANTITIES - JOB NO. 061741

BRIDGE NO.	NAME PLATE TITLE	UNIT OF STRUCTURE / ITEM NO.	205	801	SP, SS & 802	SP, SS & 802	SP & 803	SS & 804	SS & 804	SS & 805	SS & 805	SP, SS & 807	SS & 807	SS & 808
		ITEM	REMOVAL OF EXISTING BRIDGE STRUCTURE (SITE NO. _)	UNCLASSIFIED EXCAVATION FOR STRUCTURES - BRIDGE	CLASS S CONCRETE - BRIDGE	CLASS S(AE) CONCRETE - BRIDGE	CLASS 2 PROTECTIVE SURFACE TREATMENT	REINFORCING STEEL - BRIDGE (GRADE 60)	EPOXY COATED REINFORCING STEEL (GRADE 60)	STEEL PILING (HP12X53) (2) (3)	PREBORING (2)	STRUCTURAL STEEL IN PLATE GIRDER SPANS (A709, GR. 50)	PAINTING STRUCTURAL STEEL	ELASTOMERIC BEARINGS
		UNIT	LUMP SUM	CU. YD.	CU. YD.	CU. YD.	SQ. YD.	LB.	LB.	LIN. FT.	LIN. FT.	LB.	TON	CU. IN.
07680	HIGHWAY 283 OVER INTERSTATE 30	BENT NO. 1		78	41.70		14.1	6,760	560	23	22	710	0.2	1,741.0
		BENT NO. 2		6	93.60			17,140						2,902.0
		BENT NO. 3		125	41.90		14.1	6,810	560	32	31	710	0.2	1,741.0
		240'-0" CONTINUOUS PLATE GIRDER UNIT				280.70	1,103.6		84,260			355,090	170.0	
		EXISTING BRIDGE NO. 03896 (SITE NO. 1)	1											
		TOTALS FOR JOB NO. 061741		(1) 209	177.20	280.70	1,131.8	30,710	85,380	55	53	356,510	170.4	6,384.0

BRIDGE NO.	NAME PLATE TITLE	UNIT OF STRUCTURE / ITEM NO.	SS & 809	812	SS & 816	SP	SP	SP	SP	SP	SP	SP	SP
		ITEM	SILICONE JOINT SEALANT	BRIDGE NAME PLATE (TYPE D)	CONCRETE RIPRAP	DRILLED SHAFT (42" DIA.) (2)	DRILLED SHAFT (66" DIA.) (2)	PERMANENT STEEL CASING (48" DIA.) (2)	CROSSHOLE SONIC LOGGING (42" DIA.)	CROSSHOLE SONIC LOGGING (66" DIA.)	CORING DRILLED SHAFT (2)	ARCHITECTURAL FINISH	TEXTURED COATING FINISH
		UNIT	LIN. FT.	EACH	CU. YD.	LIN. FT.	LIN. FT.	LIN. FT.	EACH	EACH	LIN. FT.	SQ. FT.	SQ. YD.
07680	HIGHWAY 283 OVER INTERSTATE 30	BENT NO. 1	37	1	25	95		21	4		27	43	27
		BENT NO. 2					56			3	19	315	199
		BENT NO. 3	37		17	74		17	4		28	43	27
		240'-0" CONTINUOUS PLATE GIRDER UNIT										974	285
		EXISTING BRIDGE NO. 03896 (SITE NO. 1)											
		TOTALS FOR JOB NO. 061741	74	1	42	169	56	38	8	3	74	1,375	538

(1) Includes approximately 23 cubic yards of rock excavation.

(2) The quantities shown are for estimating and bidding purposes only. Actual quantities will be determined in the field.

(3) These steel piles shall be Grade 50 and are required to have QPL approved special driving points which will not be paid for directly but shall be considered subsidiary to the item "STEEL PILING (HP12X53)".

TABLE OF APPROACH SLAB QUANTITIES

(FOR INFORMATION ONLY)

BRIDGE NO.	ITEM	REINFORCING STEEL	CONCRETE
	UNIT	LB.	CU. YDS.
07680	Begin Bridge	7,240	59.30
	End Bridge	7,240	59.30

QUANTITIES FOR ONE APPROACH GUTTER

(FOR INFORMATION ONLY)

BRIDGE NO.	REINFORCING STEEL	CONCRETE
	LB.	CU. YDS.
07680	210	4.10

STATE OF ARKANSAS
LICENSED PROFESSIONAL ENGINEER
No. 17472
TRAVIS MICHAEL RAPP

7/24/2024

BRIDGE ENGINEER

SCHEDULE OF BRIDGE QUANTITIES
I-30 STR. & APPRS. (HWY. 283) (S)
HOT SPRING COUNTY
ROUTE 283 SEC. 3

ARKANSAS STATE HIGHWAY COMMISSION
LITTLE ROCK, ARK.

DRAWN BY: JCR DATE: 2/2024 FILENAME: b061741_q1
CHECKED BY: HRA DATE: 3/2024 SCALE: NONE
DESIGNED BY: CBM DATE: 3/2024

BRIDGE NO. 07680 DRAWING NO. 67304

DATE REVISED	DATE REVISED	FED.RD. DIST.NO.	STATE	JOB NO.	SHEET NO.	TOTAL SHEETS
		6	ARK.	061741	67	136
		SUMMARY OF QUANTITIES AND REVISIONS				

STATE OF ARKANSAS
REGISTERED PROFESSIONAL ENGINEER
No. 13832
RYAN W. CASTOR
07-29-2024

SUMMARY OF QUANTITIES

ITEM NUMBER	ITEM	QUANTITY	UNIT
201	CLEARING	26	STATION
201	GRUBBING	26	STATION
202	REMOVAL AND DISPOSAL OF CURB	398	LIN. FT.
202	REMOVAL AND DISPOSAL OF FENCE	490	LIN. FT.
202	REMOVAL AND DISPOSAL OF CONCRETE PAVEMENT	1874	SQ. YD.
202	REMOVAL AND DISPOSAL OF CONCRETE ISLANDS	218	SQ. YD.
202	REMOVAL AND DISPOSAL OF SIGN FOUNDATIONS	6	EACH
202	REMOVAL AND DISPOSAL OF CONCRETE DITCH PAVING	94	SQ. YD.
SP & 202	REMOVAL AND DISPOSAL OF WIRE ROPE SAFETY FENCE	295	LIN. FT.
202	REMOVAL AND DISPOSAL OF GUARDRAIL	1915	LIN. FT.
202	REMOVAL AND DISPOSAL OF CONCRETE PIER PROTECTION	100	LIN. FT.
202	REMOVAL AND DISPOSAL OF SIGNS	25	EACH
SP, SS, & 210	UNCLASSIFIED EXCAVATION	12698	CU. YD.
SP & 210	COMPACTED EMBANKMENT	5962	CU. YD.
SP & 210	SOIL STABILIZATION	200	TON
SP, SS, & 303	AGGREGATE BASE COURSE (CLASS 7)	6536	TON
SS & 401	TACK COAT	1309	GAL.
SP, SS, & 406	MINERAL AGGREGATE IN ACHM BINDER COURSE (1")	1368	TON
SP, SS, & 406	ASPHALT BINDER (PG 64-22) IN ACHM BINDER COURSE (1")	32	TON
SP, SS, & 406	ASPHALT BINDER (PG 76-22) IN ACHM BINDER COURSE (1")	28	TON
SP, SS, & 407	MINERAL AGGREGATE IN ACHM SURFACE COURSE (1/2")	2218	TON
SP, SS, & 407	ASPHALT BINDER (PG 64-22) IN ACHM SURFACE COURSE (1/2")	81	TON
SP, SS, & 407	ASPHALT BINDER (PG 76-22) IN ACHM SURFACE COURSE (1/2")	53	TON
SP & 412	COLD MILLING ASPHALT PAVEMENT	667	SQ. YD.
SP, SS, & 414	ASPHALT CONCRETE PATCHING FOR MAINTENANCE OF TRAFFIC	10	TON
SP, SS, & 415	ACHM PATCHING OF EXISTING ROADWAY	10	TON
SP, SS, & 504	APPROACH SLABS	118.60	CU. YD.
SP, SS, & 504	APPROACH GUTTERS	16.40	CU. YD.
SS & 507	REMOVAL AND DISPOSAL OF CONCRETE PAVEMENT FOR PATCHING	140	SQ. YD.
SP, SS, & 507	PORTLAND CEMENT CONCRETE PAVEMENT PATCHING (8" UNIFORM THICKNESS)	140	SQ. YD.
601	MOBILIZATION	1.00	LUMP SUM
SP & 602	FURNISHING FIELD OFFICE	1	EACH
SP, SS, & 603	MAINTENANCE OF TRAFFIC	1.00	LUMP SUM
SS & 604	SIGNS	1390	SQ. FT.
SS & 604	BARRICADES	96	LIN. FT.
SS & 604	TRAFFIC DRUMS	266	EACH
SS & 604	FURNISHING AND INSTALLING PRECAST CONCRETE BARRIER	3259	LIN. FT.
SS & 604	RELOCATING PRECAST CONCRETE BARRIER	180	LIN. FT.
604	CONSTRUCTION PAVEMENT MARKINGS	28756	LIN. FT.
604	REMOVAL OF CONSTRUCTION PAVEMENT MARKINGS	15673	LIN. FT.
604	REMOVAL OF PERMANENT PAVEMENT MARKINGS	8996	LIN. FT.
SS & 604	ADVANCE WARNING ARROW PANEL	40	DAY
SP, SS, & 604	PORTABLE CHANGEABLE MESSAGE SIGN	4	WEEK
SP	MOBILE SPEED NOTIFICATION SYSTEM (SPECIAL)	2	EACH
SP, SS, & 605	CONCRETE DITCH PAVING (TYPE B)	101	SQ. YD.
SP	CULVERT CLEAN OUT	3	EACH
SS & 606	22" X 14" SIDE DRAIN	29	LIN. FT.
SS & 611	4" PIPE UNDERDRAINS	2000	LIN. FT.
SS & 611	UNDERDRAIN OUTLET PROTECTORS	8	EACH
SS & 617	GUARDRAIL (TYPE A)	1725	LIN. FT.
SP & 617	TERMINAL ANCHOR POSTS (TYPE 1)	4	EACH
SS & 617	GUARDRAIL TERMINAL (TYPE 2)	8	EACH
SS & 617	THRIE BEAM GUARDRAIL TERMINAL	4	EACH
SP	TEMPORARY TERMINAL ANCHOR FOR WIRE ROPE SAFETY FENCE	2	EACH
SP	WIRE ROPE SAFETY FENCE (POST REPAIR)	20	EACH
SP	WIRE ROPE SAFETY FENCE - REMOVE AND RECONSTRUCT	320	LIN. FT.
SS & 619	WIRE FENCE (TYPE C)	490	LIN. FT.
620	LIME	22	TON
620	SEEDING	11.02	ACRE
SS & 620	MULCH COVER	28.00	ACRE
620	WATER	1471.6	M. GAL.
621	TEMPORARY SEEDING	16.98	ACRE
621	SILT FENCE	2238	LIN. FT.
621	SAND BAG DITCH CHECKS	176	BAG
621	SEDIMENT REMOVAL AND DISPOSAL	160	CU. YD.
621	ROCK DITCH CHECKS	207	CU. YD.
623	SECOND SEEDING APPLICATION	11.02	ACRE
624	SOLID SODDING	106	SQ. YD.
SP, SS, & 632	CONCRETE ISLAND	158	SQ. YD.
635	ROADWAY CONSTRUCTION CONTROL	1.00	LUMP SUM
637	MAILBOXES	1	EACH
SS & 637	MAILBOX SUPPORTS (SINGLE)	1	EACH
642	RUMBLE STRIPS IN ASPHALT SHOULDERS	1088	LIN. FT.
718	REFLECTORIZED PAINT PAVEMENT MARKING WHITE (10")	306	LIN. FT.
719	THERMOPLASTIC PAVEMENT MARKING WHITE (6")	2794	LIN. FT.
719	THERMOPLASTIC PAVEMENT MARKING WHITE (8")	897	LIN. FT.
719	THERMOPLASTIC PAVEMENT MARKING WHITE (12")	36	LIN. FT.
719	THERMOPLASTIC PAVEMENT MARKING YELLOW (6")	3324	LIN. FT.
719	THERMOPLASTIC PAVEMENT MARKING (YIELD LINE)	68	LIN. FT.
719	THERMOPLASTIC PAVEMENT MARKING (ARROWS)	2	EACH
SP	ENHANCED THERMOPLASTIC PAVEMENT MARKING WHITE (6")	1775	LIN. FT.
SP	ENHANCED THERMOPLASTIC PAVEMENT MARKING YELLOW (6")	1546	LIN. FT.
721	RAISED PAVEMENT MARKERS (TYPE II)	22	EACH
SS & 728	DELINEATOR (TYPE 2)	114	EACH
SS & 731	TEMPORARY IMPACT ATTENUATION BARRIER	2	EACH
SS & 731	TEMPORARY IMPACT ATTENUATION BARRIER (REPAIR)	2	EACH
SP, SS, & 802	CLASS S CONCRETE-ROADWAY	6.68	CU. YD.
SS & 804	REINFORCING STEEL-ROADWAY (GRADE 60)	15320	POUND
SS & 816	FILTER BLANKET	54	SQ. YD.
SS & 816	DUMPED RIPRAP	27	CU. YD.
	STRUCTURES OVER 20' SPAN		
205	REMOVAL OF EXISTING BRIDGE STRUCTURE (SITE NO. 1)	1	LUMP SUM
636	BRIDGE CONSTRUCTION CONTROL	1	LUMP SUM
801	UNCLASSIFIED EXCAVATION FOR STRUCTURES-BRIDGE	209	CU. YD.
SP, SS, & 802	CLASS S CONCRETE-BRIDGE	177.20	CU. YD.
SP, SS, & 802	CLASS S(AE) CONCRETE-BRIDGE	280.70	CU. YD.
SP	ARCHITECTURAL FINISH	1375	SQ. FT.
SP	TEXTURED COATING FINISH	538	SQ. YD.
SP & 803	CLASS 2 PROTECTIVE SURFACE TREATMENT	1131.8	SQ. YD.
SS & 804	REINFORCING STEEL-BRIDGE (GRADE 60)	30710	POUND
SS & 804	EPOXY COATED REINFORCING STEEL (GRADE 60)	85380	POUND
SS & 805	STEEL PILING (HP 12X53)	55	LIN. FT.
SP	CORING DRILLED SHAFT	74	LIN. FT.
SP	DRILLED SHAFT (42" DIAMETER)	169	LIN. FT.
SP	DRILLED SHAFT (66" DIAMETER)	56	LIN. FT.
SP	PERMANENT STEEL CASING (48" DIAMETER)	38	LIN. FT.
SS & 805	PREBORING	53	LIN. FT.
SP	CROSSHOLE SONIC LOGGING (42" DIAMETER)	8	EACH
SP	CROSSHOLE SONIC LOGGING (66" DIAMETER)	3	EACH
SP, SS, & 807	STRUCTURAL STEEL IN PLATE GIRDER SPANS (A709, GR. 50)	356510	POUND
SS & 807	PAINTING STRUCTURAL STEEL	170.4	TON
SS & 808	ELASTOMERIC BEARINGS	6384.0	CU. IN.
SS & 809	SILICONE JOINT SEALANT	74	LIN. FT.
812	BRIDGE NAME PLATE (TYPE D)	1	EACH
SS & 816	CONCRETE RIPRAP	42	CU. YD.

REVISIONS

DATE	REVISION	SHEET NUMBER

SUMMARY OF QUANTITIES AND REVISIONS

7/29/2024
11:03:31 AM
...\Road_Sheets\QT\r061741_QT01

DATE REVISED	DATE REVISED	FED.RD. DIST.NO.	STATE	JOB NO.	SHEET NO.	TOTAL SHEETS
		6	ARK.	061741	68	136
		SURVEY CONTROL DETAILS				

SURVEY CONTROL COORDINATES

Project Name: s061741
Date: 3/4/2022
Coordinate System: ARKANSAS STATE PLANE – SOUTH ZONE BASED ON GPS CONTROL, 300016 – 300016A PROJECTED TO GROUND.
Units: U.S. SURVEY FOOT

Point Name	Northing	Easting	Elev	Feature	Description
1	1885490.4331	1006944.0598	378.61	CTL	ARDOT STD. MON. STAMPED PN:1
2	1885082.1751	1007376.7761	380.15	CTL	ARDOT STD. MON. STAMPED PN:2
3	1884781.6853	1007707.7732	383.42	CTL	ARDOT STD. MON. STAMPED PN:3
4	1884536.8231	1008051.5111	369.93	CTL	ARDOT STD. MON. STAMPED PN:4
5	1884302.6856	1008227.8817	354.66	CTL	ARDOT STD. MON. STAMPED PN:5
6	1883813.2468	1008354.8321	326.26	CTL	ARDOT STD. MON. STAMPED PN:6
7	1883436.9811	1008381.2063	322.12	CTL	ARDOT STD. MON. STAMPED PN:7
100	1880786.2765	1009967.1835	295.75	GPS	ARDOT GPS #300016
101	1881330.7851	1011179.8905	268.61	GPS	ARDOT GPS #300016A
900	1884747.1918	1007748.4918	384.43	TBM	CHISLED SQUARE SW CORNER OF BRI
901	1882738.6409	1008665.4846	304.53	TBM	CHISLED SQUARE

*Note – Rebar and Cap – Standard – 5/8" Rebar with 2" Aluminum Cap stamped
*(standard markings common to all caps), or as indicated
(other markings indicated in the point description of the individual point).
ALL DISTANCES ARE GROUND.
USE CAF = 1.0 FOR STAKEOUT FOR THIS PROJECT.
A PROJECT CAF OF 0.999912250133 HAS BEEN USED TO COMPUTE THE ABOVE GROUND COORDINATES.
THIS CAF IS INTENDED FOR USE WITHIN THE PROJECT LIMITS.
GRID DISTANCE = GROUND DISTANCE X CAF.
GRID COORDINATES ARE STORED UNDER FILE NAME s061741gi.CTL
HORIZONTAL DATUM: NAD 83 (2011)
VERTICAL DATUM: NAVD 88 POSITIONAL ACCURACY THIRD ORDER, UNLESS SPECIFIED OTHERWISE AT A SPECIFIC POINT.

REFERENCE POINTS (1500 SERIES) ARE TO BE USED TO ESTABLISH CONTROL IF THE PRIMARY CONTROL POINTS LISTED ABOVE HAVE BEEN DESTROYED.
REFERENCE POINTS ARE NOT TO BE USED FOR VERTICAL CONTROL

BASIS OF BEARING:
ARKANSAS STATE PLANE GRID BEARINGS – 0302–SOUTH ZONE
DETERMINED FROM GPS CONTROL POINTS: 300016 – 300016A
CONVERGENCE ANGLE: 0°33'49.12"LEFT AT PN:4 LT:N 34°14'04.48" LG:W 93°00'25.43"
GRID AZIMUTH = ASTRONOMICAL AZIMUTH – CONVERGENCE ANGLE.

CL - HWY. 283

POINT TYPE	POINT NO.	STATION	NORTHING	EASTING
P.O.B.	8000	100+00.00	1885482.7081	1006978.8447
P.C.	8001	102+00.00	1885345.9257	1007124.7575
P.I.		105+31.47	1885119.2270	1007366.5887
C.C.			1889526.0214	1011043.2858
P.T.	8002	108+62.21	1884921.9288	1007632.9493
P.C.	8003	110+12.43	1884832.5119	1007753.6657
P.I.		112+53.70	1884688.9067	1007947.5386
C.C.			1883681.4887	1006901.0816
P.T.	8004	114+90.48	1884489.7166	1008083.6727
P.C.	8005	116+39.26	1884366.8782	1008167.6251
P.I.		119+04.99	1884147.4947	1008317.5602
C.C.			1883828.0597	1007379.2311
P.T.	8006	121+57.60	1883882.1973	1008332.6249
P.O.E.	8007	122+00.00	1883839.8669	1008335.0286

CL - RAMP 1

POINT TYPE	POINT NO.	STATION	NORTHING	EASTING
P.O.B.	8008	200+00.00	1884331.8900	1007916.7098
P.O.E.	8009	202+26.96	1884464.3259	1008101.0257

CL - RAMP 2

POINT TYPE	POINT NO.	STATION	NORTHING	EASTING
P.O.B.	8004	202+26.96	1884489.7166	1008083.6727
P.C.	8023	20263.81	1884517.6783	1008107.6809
P.I.		20390.68	1884613.9321	1008190.3257
C.C.			1885494.8293	1006969.6230
P.T.	8024	20516.94	1884722.6991	1008255.6303
P.O.E.	8025	20906.84	1885056.9746	1008456.3323

CL - RAMP 3

POINT TYPE	POINT NO.	STATION	NORTHING	EASTING
P.O.B.	8015	202+78.65	1884915.2901	1007641.9117
P.C.	8016	202+91.14	1884923.0610	1007651.6909
P.I.		203+93.14	1884986.5187	1007731.5483
C.C.			1880437.3021	1011216.2428
P.T.	8017	204+95.12	1885047.0938	1007813.6138
P.O.E.	8018	205+08.88	1885055.2649	1007824.6838

CL - RAMP 4

POINT TYPE	POINT NO.	STATION	NORTHING	EASTING
P.O.B.	8019	200+00.00	1884692.5317	1007484.9441
P.O.E.	8020	202+73.71	1884927.1216	1007625.9499

CL - I-30

POINT TYPE	POINT NO.	STATION	NORTHING	EASTING
P.O.B.	8021	1000+00.00	1884153.2142	1007396.4504
P.O.E.	8022	1015+00.00	1885287.0087	1008378.5451

STATE OF ARKANSAS
REGISTERED PROFESSIONAL ENGINEER
No. 13832
RYAN W. CASTOR
05-02-2024

5/2/2024
2:46:08 PM
...\SCY061741_SC_04.dgn

DATE REVISED	DATE REVISED	FED.RD. DIST.NO.	STATE	JOB NO.	SHEET NO.	TOTAL SHEETS
		6	ARK.	061741	69	136
		SURVEY CONTROL DETAILS				

STATE OF ARKANSAS
REGISTERED PROFESSIONAL ENGINEER
No. 13832
RYAN W. CASTOR
05-02-2024

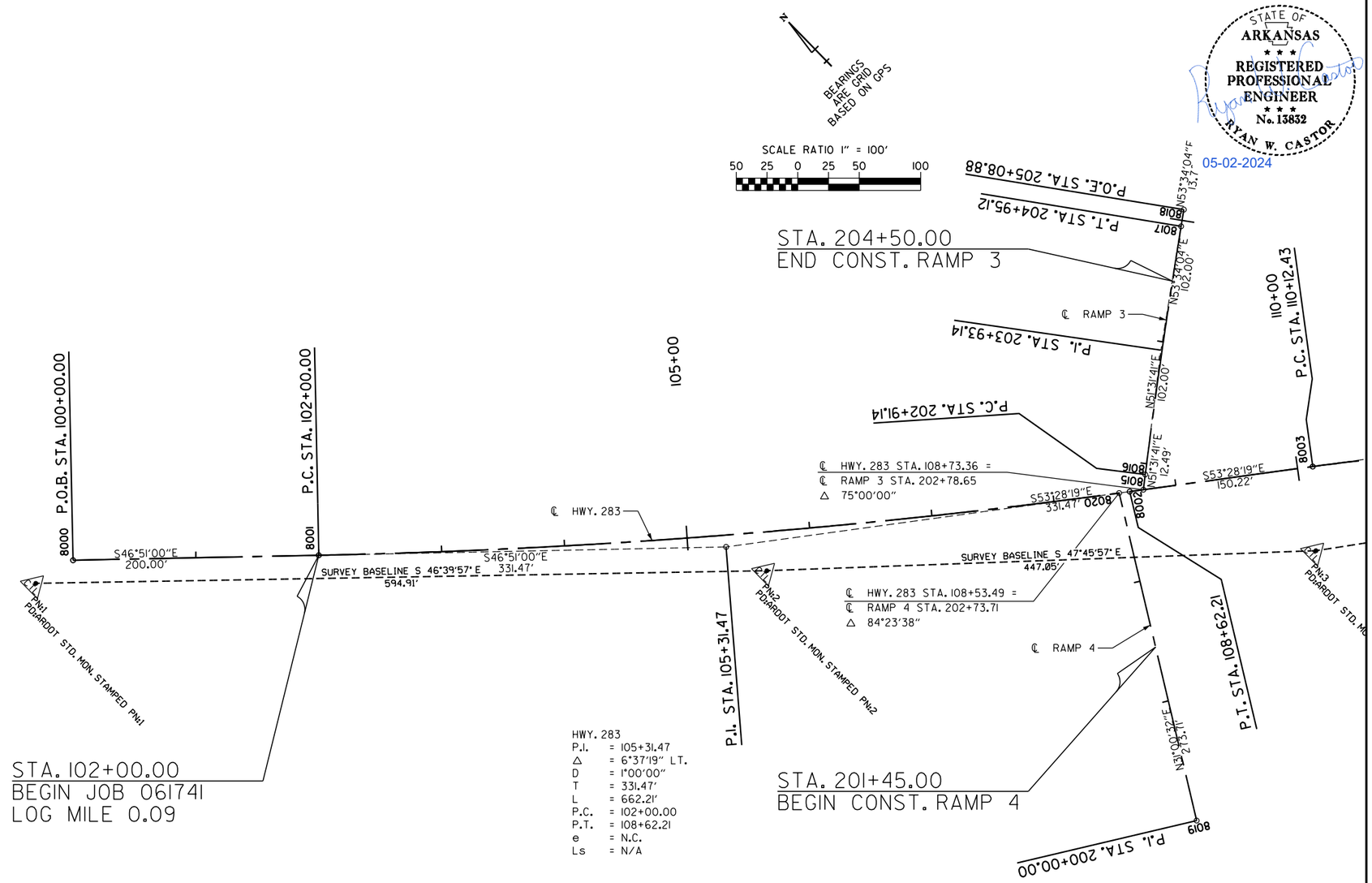

HWY. 283

P.I.	=	105+31.47
△	=	6°37'19" LT.
D	=	1°00'00"
T	=	331.47'
L	=	662.21'
P.C.	=	102+00.00
P.T.	=	108+62.21
e	=	N.C.
Ls	=	N/A

SURVEY CONTROL DETAILS

5/2/2024
2:46:55 PM
...\SCL\r061741_SC_01.dgn

DATE REVISED	DATE REVISED	FED.RD. DIST.NO.	STATE	JOB NO.	SHEET NO.	TOTAL SHEETS
		6	ARK.	061741	70	136
		SURVEY CONTROL DETAILS				

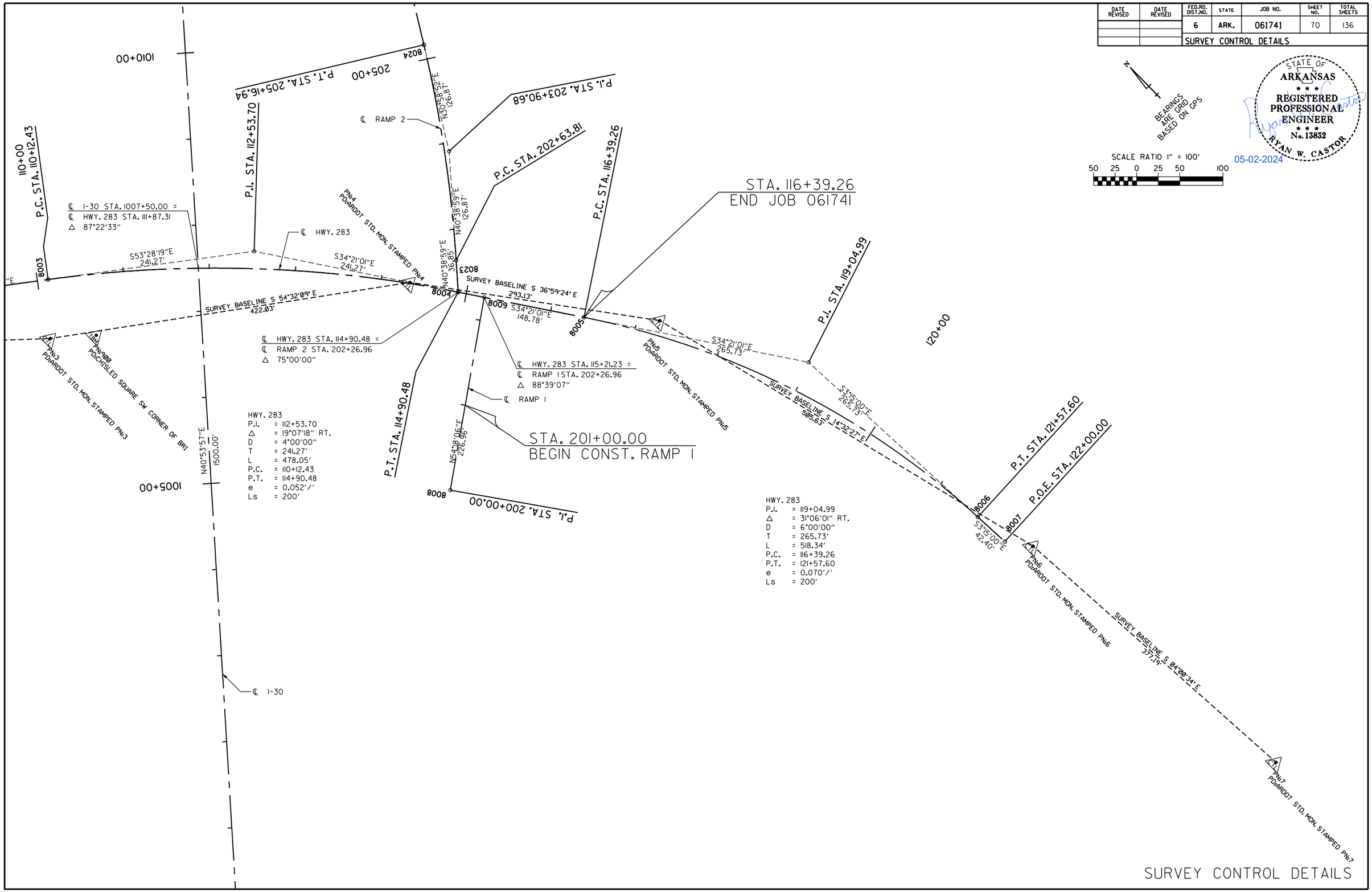

SURVEY CONTROL DETAILS

5/2/2024
2:46:07 PM
...\SCV-061741_SC_02.dgn

DATE REVISED	DATE REVISED	FED.RD. DIST.NO.	STATE	JOB NO.	SHEET NO.	TOTAL SHEETS
		6	ARK.	061741	71	136
		SURVEY CONTROL DETAILS				

STATE OF ARKANSAS
REGISTERED PROFESSIONAL ENGINEER
No. 13832
RYAN W. CASTOR
05-02-2024

BEARINGS ARE GRID BASED ON GPS

SCALE RATIO 1" = 100'
50 25 0 25 50 100

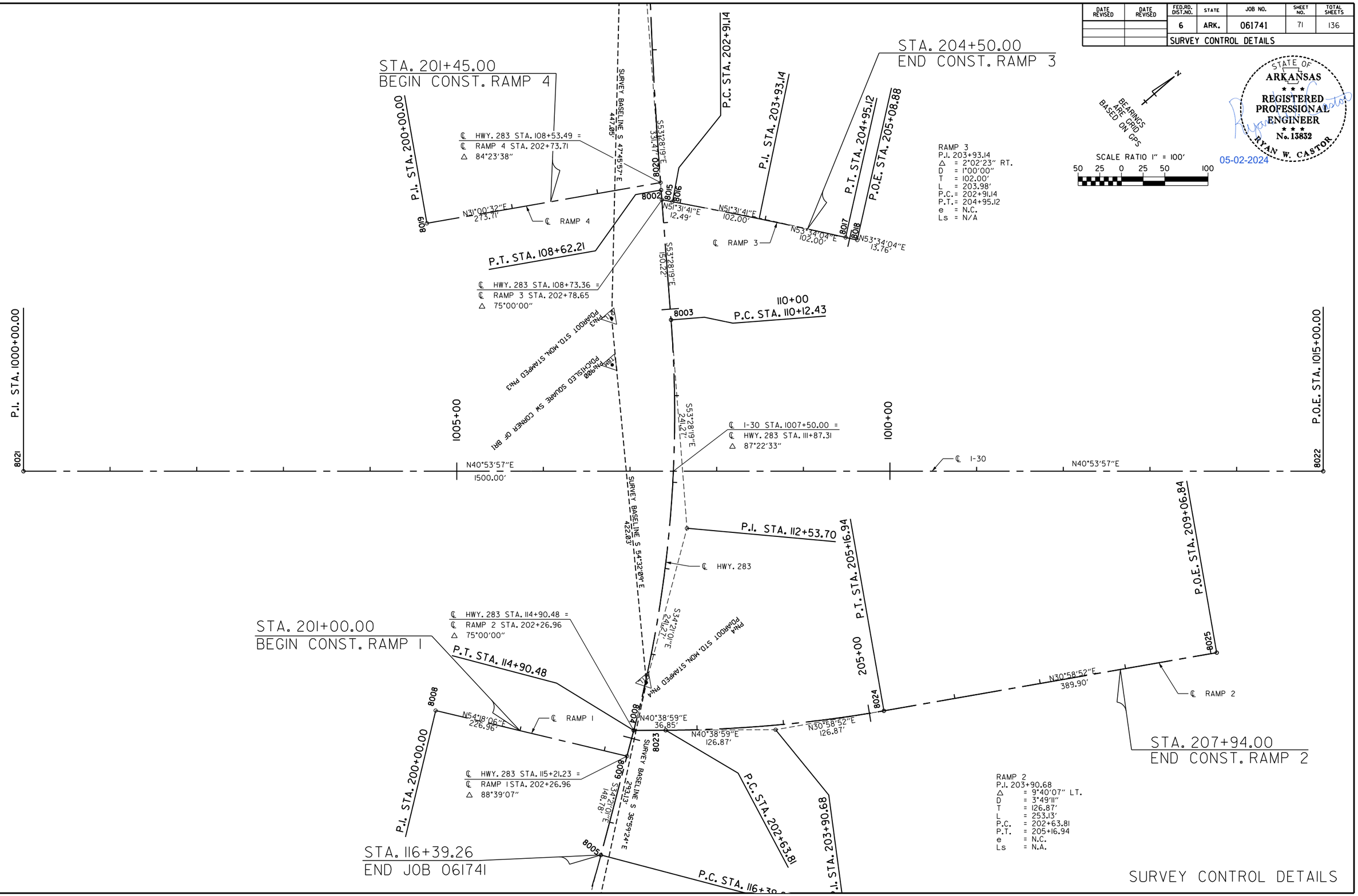

SURVEY CONTROL DETAILS

5/2/2024
2:46:24 PM
...\SCr061741_SC_03a.dgn

DATE REVISED	DATE REVISED	FED.RD. DIST.NO.	STATE	JOB NO.	SHEET NO.	TOTAL SHEETS
		6	ARK.	061741	72	136
		PLAN & PROFILE STA. 100+00 - 108+00				

REMOVAL & DISPOSAL OF FENCE

STA.	STA.	SIDE	LIN. FT.
103+14.83	108+01.18	LT.	490

FENCE

STA.	STA.	SIDE	TYPE	LIN. FT.
103+14.83	108+01.18	LT.	C	490

HWY. 283
P.I. = 105+31.47
Δ = 6°37'19" LT.
D = 1°00'00"
T = 331.47'
L = 662.21'
P.C. = 102+00.00
P.T. = 108+62.21
e = N.C.
Ls = N/A

STA. 101+14 IN PLACE
36" X 94' R.C. PIPE CULVERT
WITH HDWLS. LT. & RT.
RETAIN

STATE OF ARKANSAS
REGISTERED PROFESSIONAL ENGINEER
No. 13832
RYAN W. CASTOR
05-02-2024

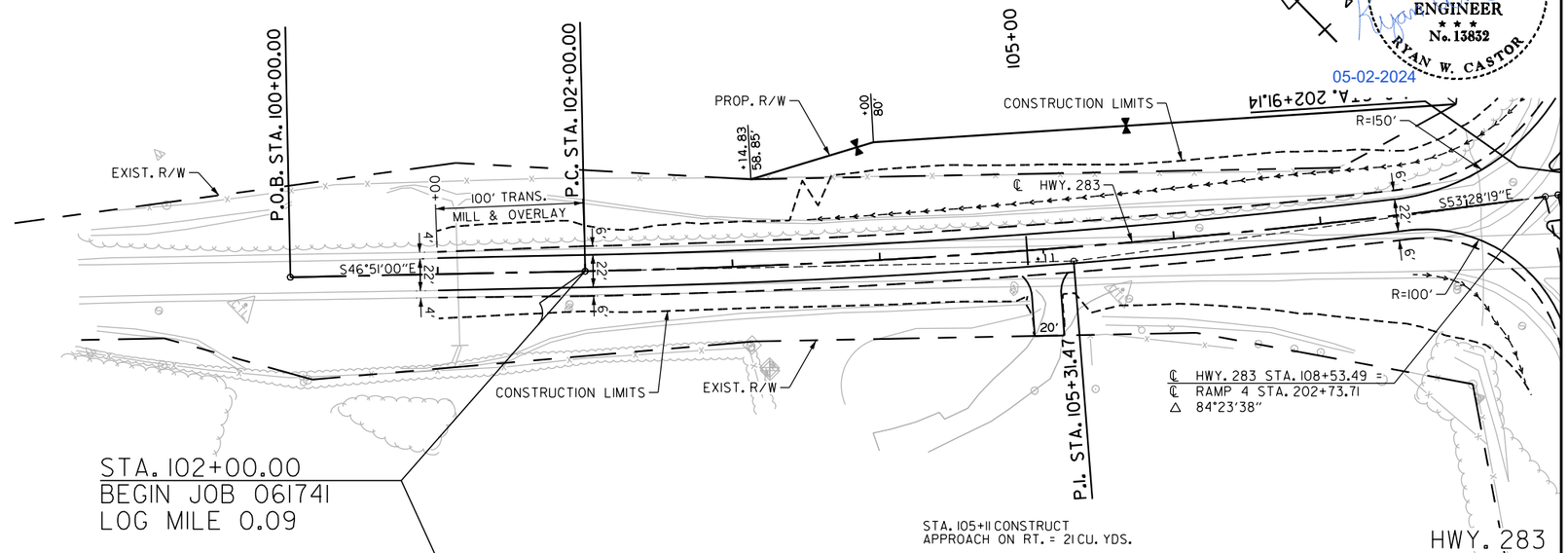

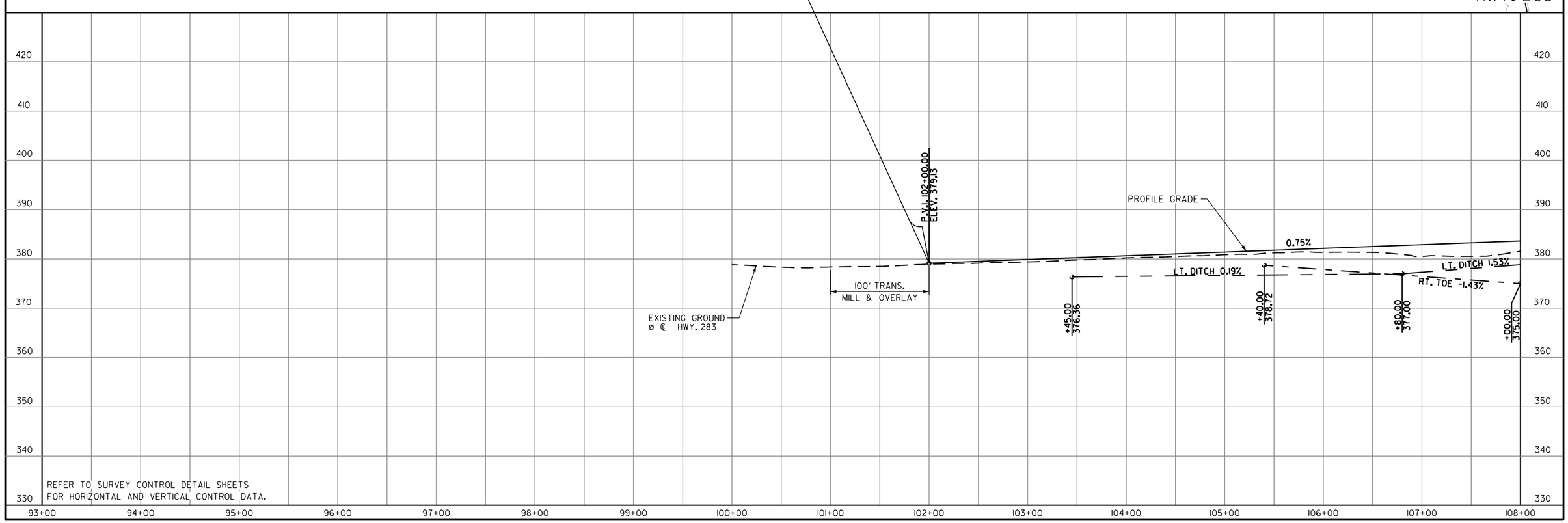

REFER TO SURVEY CONTROL DETAIL SHEETS
FOR HORIZONTAL AND VERTICAL CONTROL DATA.

5/2/2024
2:46:28 PM
...\PP\r061741_PP01.dgn

DATE REVISED	DATE REVISED	FED.RD. DIST.NO.	STATE	JOB NO.	SHEET NO.	TOTAL SHEETS
		6	ARK.	061741	73	136
		PLAN & PROFILE STA. 108+00 - 122+00				

STATE OF ARKANSAS
REGISTERED PROFESSIONAL ENGINEER
No. 13832
RYAN W. CASTOR
05-02-2024

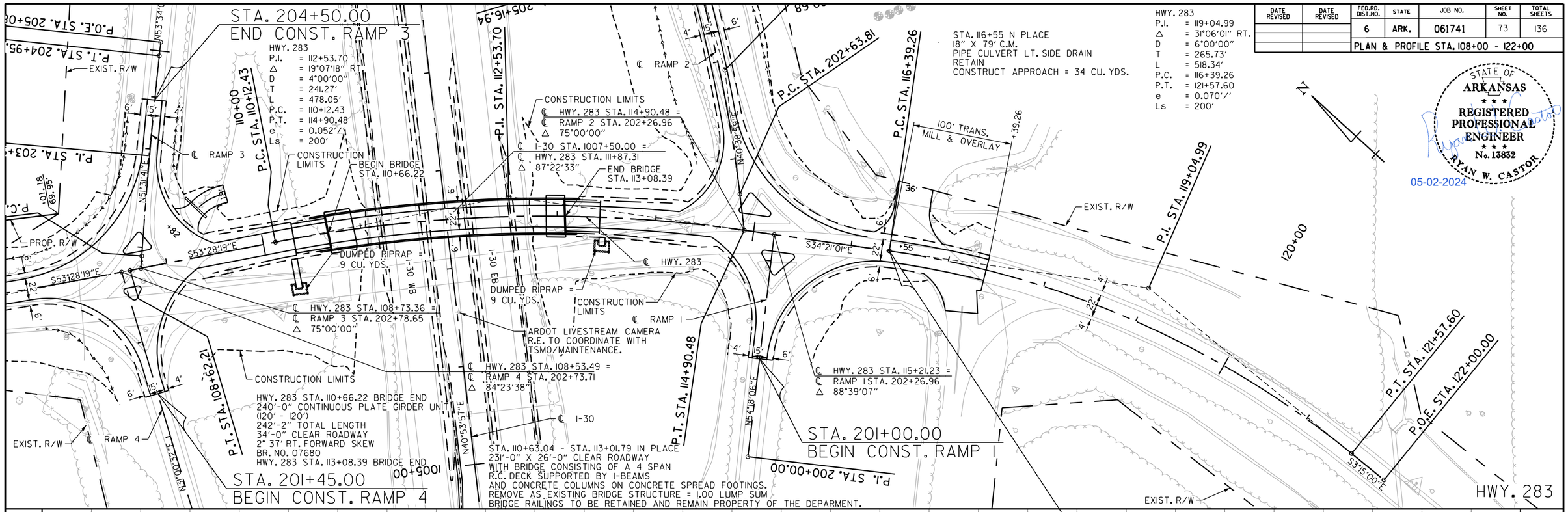

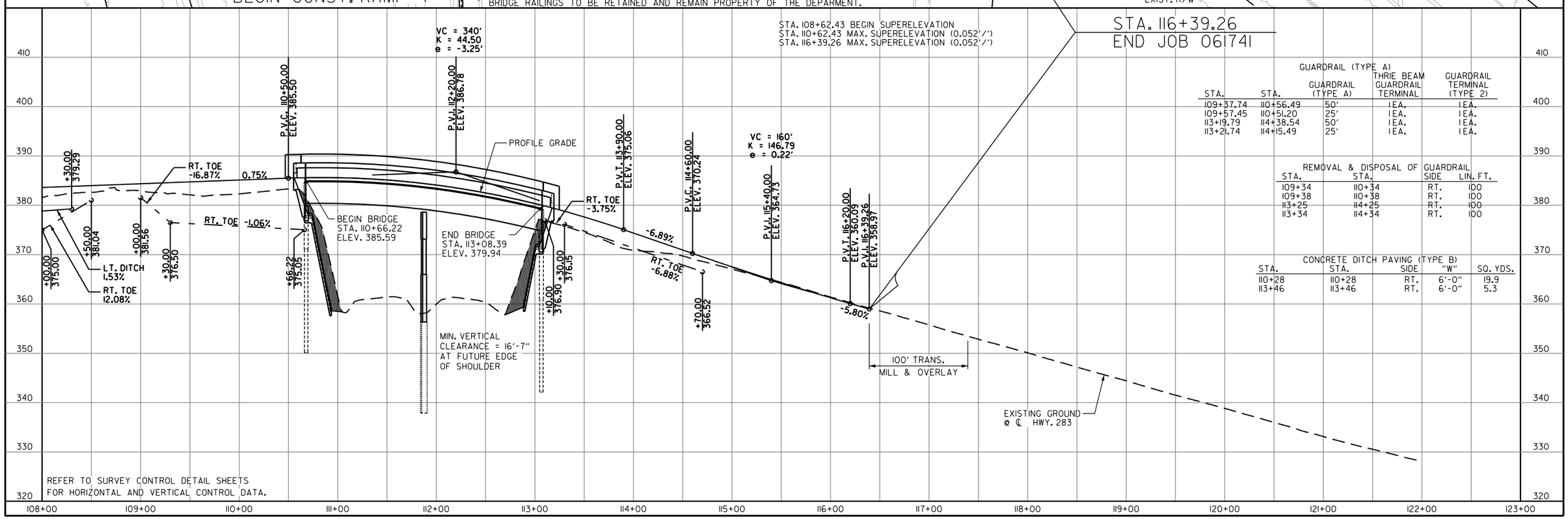

GUARDRAIL (TYPE A)

STA.	STA.	GUARDRAIL (TYPE A)	THRIE BEAM GUARDRAIL TERMINAL	GUARDRAIL TERMINAL (TYPE 2)
109+37.74	110+56.49	50'	1 EA.	1 EA.
109+57.45	110+51.20	25'	1 EA.	1 EA.
113+19.79	114+38.54	50'	1 EA.	1 EA.
113+21.74	114+15.49	25'	1 EA.	1 EA.

REMOVAL & DISPOSAL OF GUARDRAIL

STA.	STA.	SIDE	LIN. FT.
109+34	110+34	RT.	100
109+38	110+38	RT.	100
113+25	114+25	RT.	100
113+34	114+34	RT.	100

CONCRETE DITCH PAVING (TYPE B)

STA.	STA.	SIDE	"W"	SQ. YDS.
110+28	110+28	RT.	6'-0"	19.9
113+46	113+46	RT.	6'-0"	5.3

5/2/2024
2:46:32 PM
...\PPr_061741_PP02.dgn

DATE REVISED	DATE REVISED	FED.RD. DIST.NO.	STATE	JOB NO.	SHEET NO.	TOTAL SHEETS
		6	ARK.	061741	74	136

PLAN & PROFILE RAMP 1

STATE OF ARKANSAS
REGISTERED PROFESSIONAL ENGINEER
No. 13832
RYAN W. CASTOR
05-02-2024

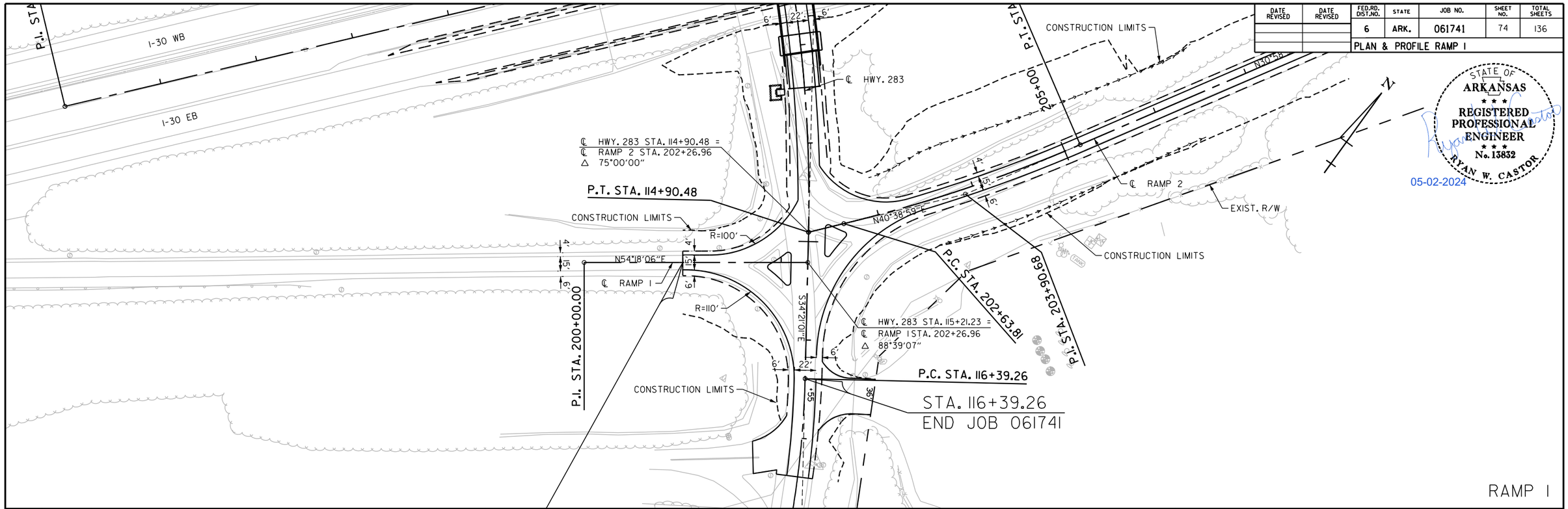

RAMP 1

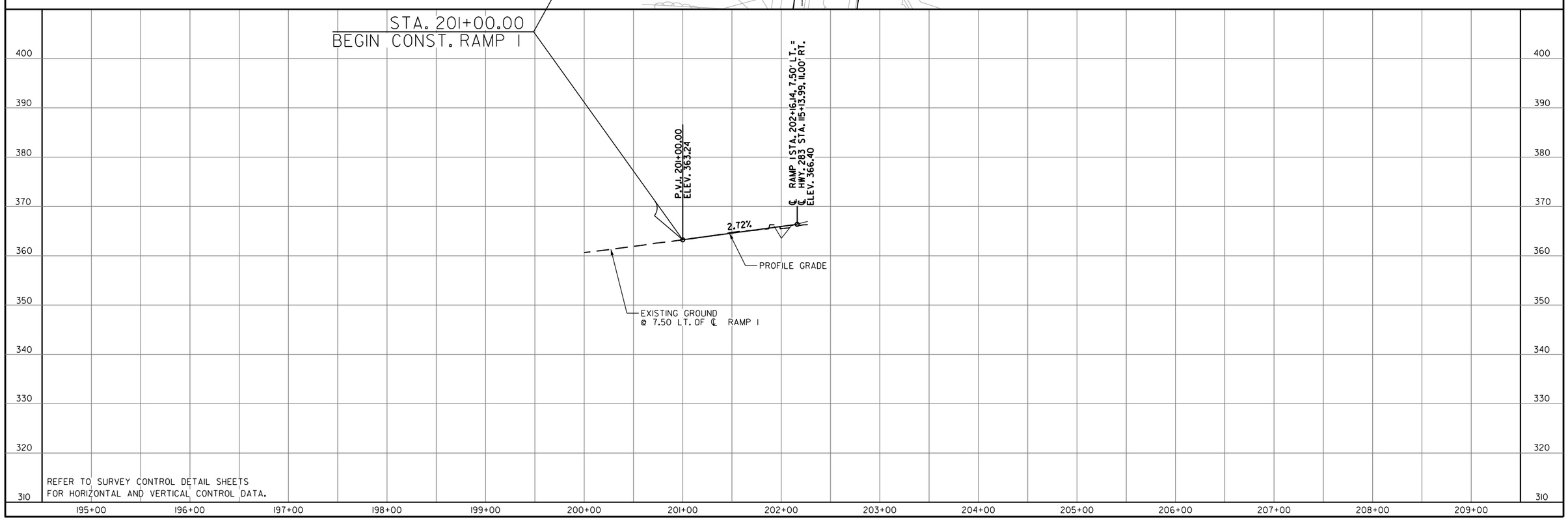

REFER TO SURVEY CONTROL DETAIL SHEETS
FOR HORIZONTAL AND VERTICAL CONTROL DATA.

5/2/2024
2:46:37 PM
...\PP\r061741_PP03.dgn

DATE REVISED	DATE REVISED	FED.RD. DIST.NO.	STATE	JOB NO.	SHEET NO.	TOTAL SHEETS
		6	ARK.	061741	75	136
		PLAN & PROFILE RAMP 2				

STATE OF ARKANSAS
REGISTERED PROFESSIONAL ENGINEER
No. 13832
RYAN W. CASTOR
05-02-2024

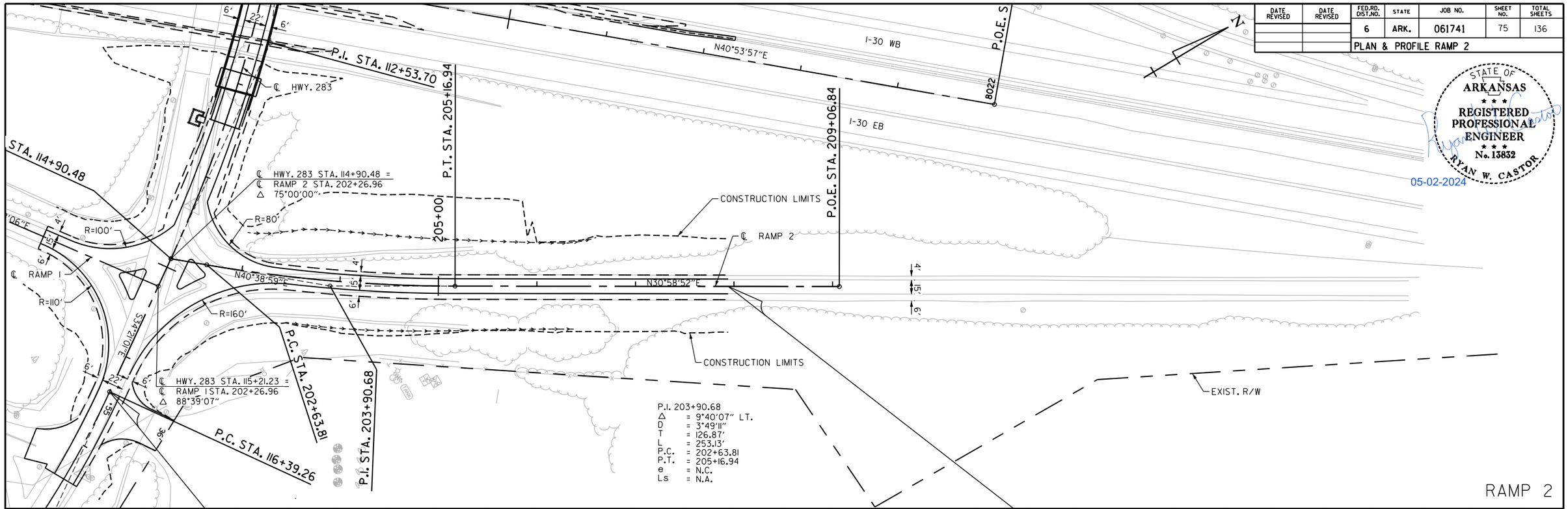

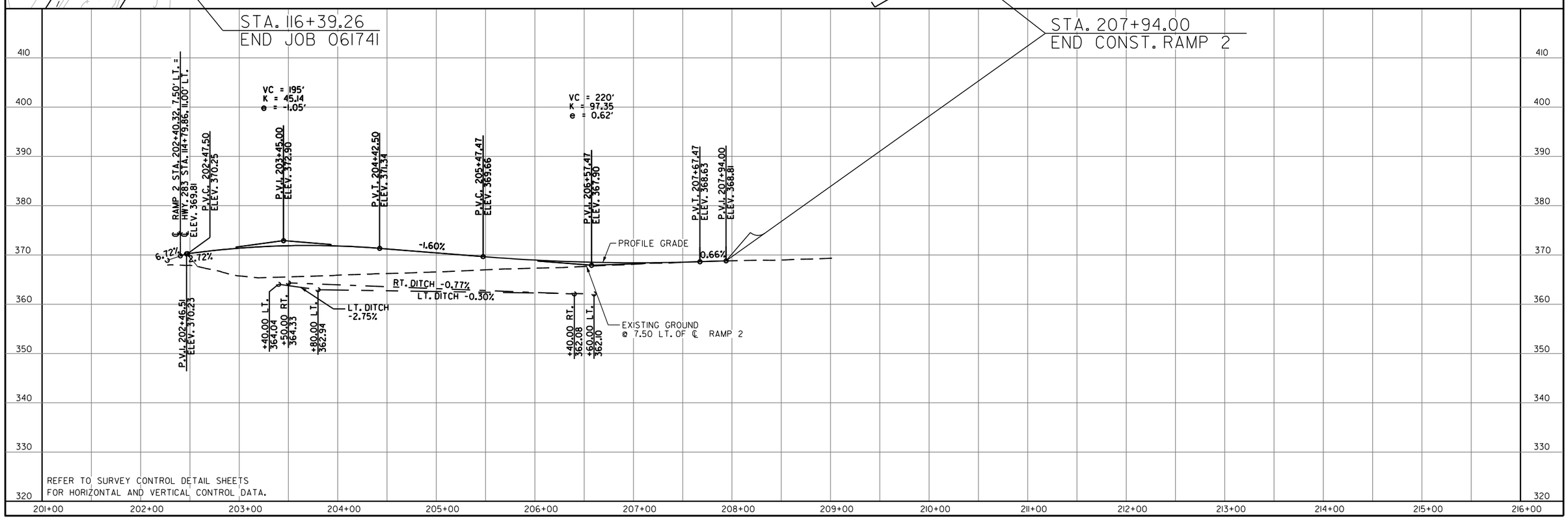

REFER TO SURVEY CONTROL DETAIL SHEETS
FOR HORIZONTAL AND VERTICAL CONTROL DATA.

5/2/2024
2:46:40 PM
...\PP\r061741_PP04.dgn

DATE REVISED	DATE REVISED	FED.RD. DIST.NO.	STATE	JOB NO.	SHEET NO.	TOTAL SHEETS
		6	ARK.	061741	76	136
		PLAN & PROFILE RAMP 3				

RAMP 3
P.I. 203+93.14
Δ = 2°02'23" RT.
D = 1°00'00"
T = 102.00'
L = 203.98'
P.C.= 202+91.14
P.T.= 204+95.12
e = N.C.
Ls = N/A

STATE OF ARKANSAS
REGISTERED PROFESSIONAL ENGINEER
No. 13832
RYAN W. CASTOR
05-02-2024

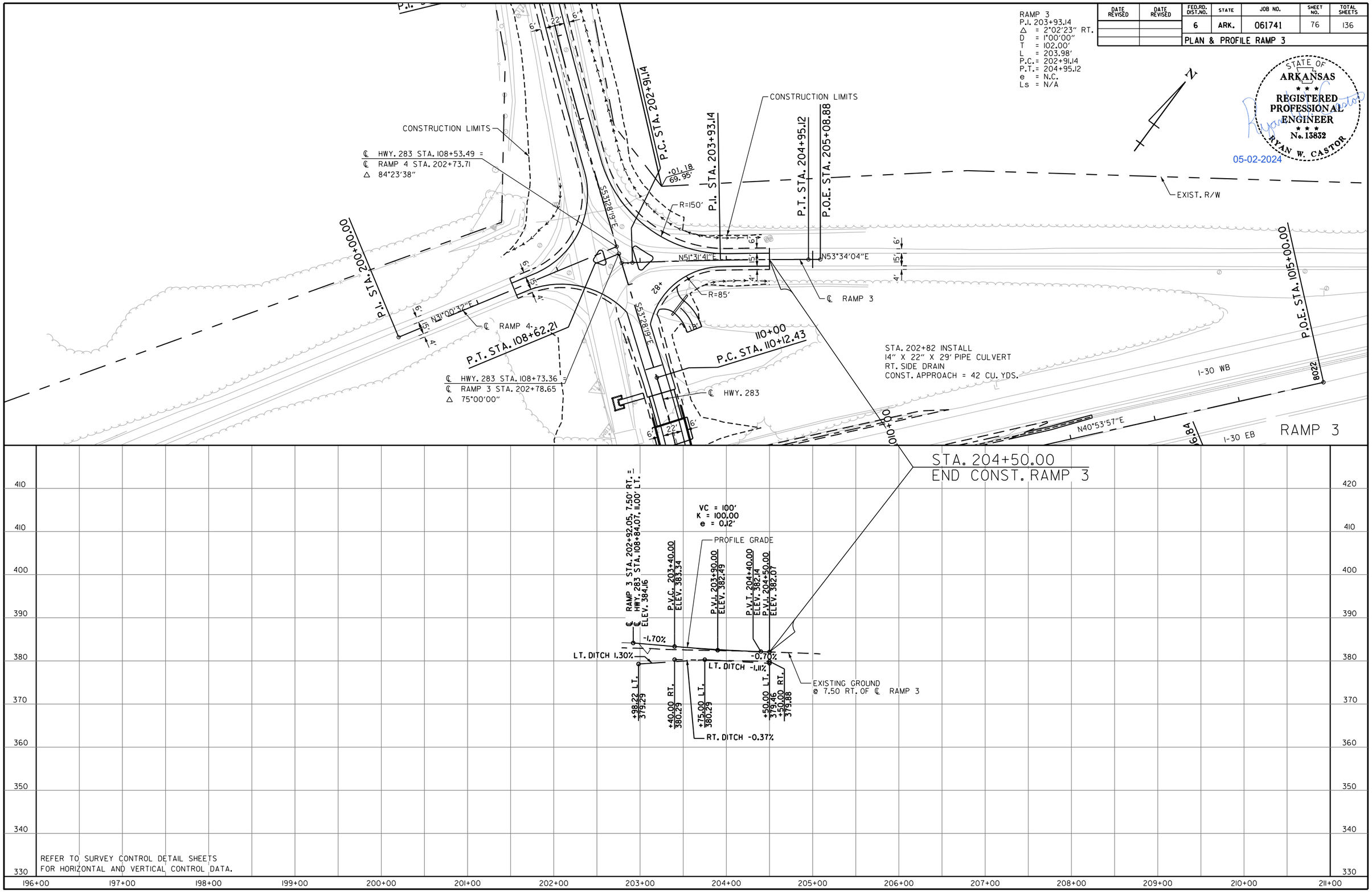

REFER TO SURVEY CONTROL DETAIL SHEETS
FOR HORIZONTAL AND VERTICAL CONTROL DATA.

5/2/2024
2:46:15 PM
...\PP\r061741_PP05.dgn

DATE REVISED	DATE REVISED	FED.RD. DIST.NO.	STATE	JOB NO.	SHEET NO.	TOTAL SHEETS
		6	ARK.	061741	77	136
		PLAN & PROFILE RAMP 4				

STATE OF ARKANSAS
REGISTERED PROFESSIONAL ENGINEER
No. 13832
RYAN W. CASTOR
05-02-2024

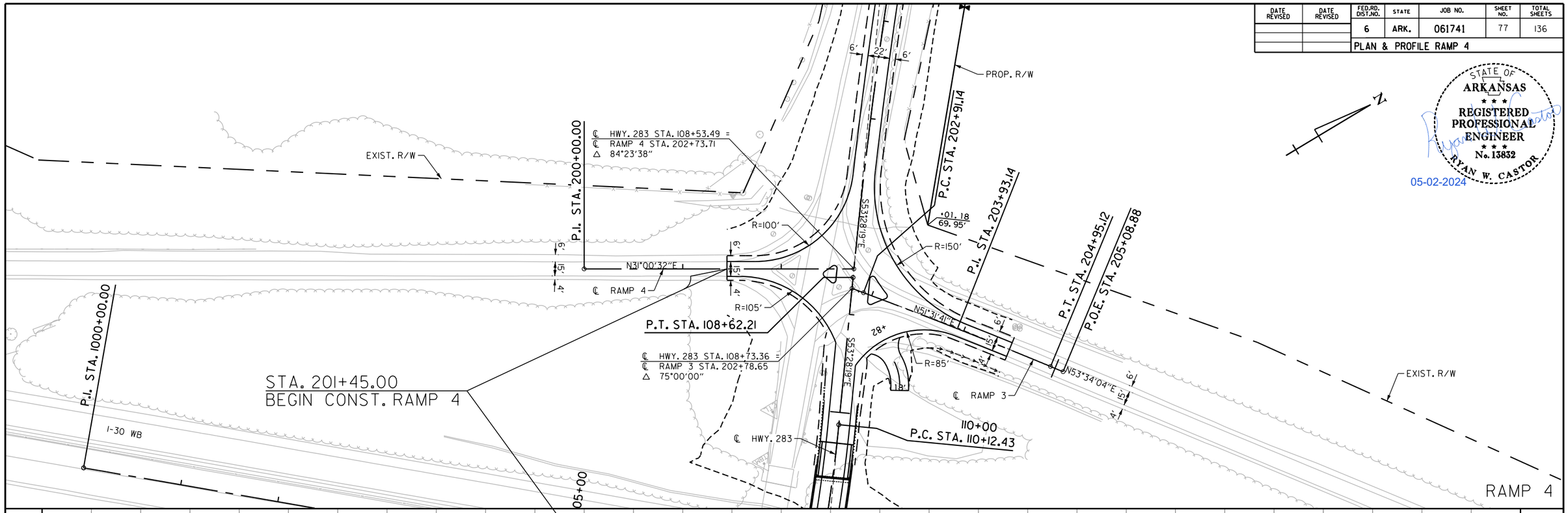

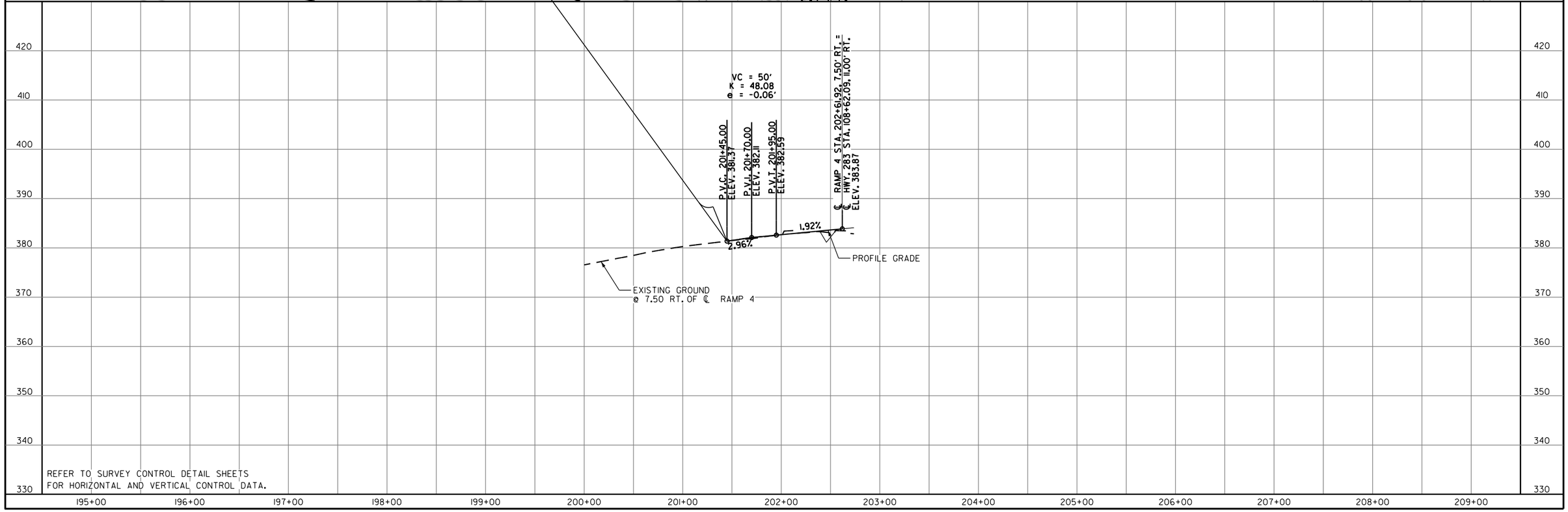

REFER TO SURVEY CONTROL DETAIL SHEETS
FOR HORIZONTAL AND VERTICAL CONTROL DATA.

5/2/2024
2:46:49 PM
...\PP\r061741_PP06.dgn

DATE REVISED	DATE REVISED	FED.RD. DIST.NO.	STATE	JOB NO.	SHEET NO.	TOTAL SHEETS
		6	ARK.	061741	78	136
		PLAN 1002+00 - 1013+00				

STATE OF ARKANSAS
REGISTERED PROFESSIONAL ENGINEER
No. 13832
RYAN W. CASTOR
05-02-2024

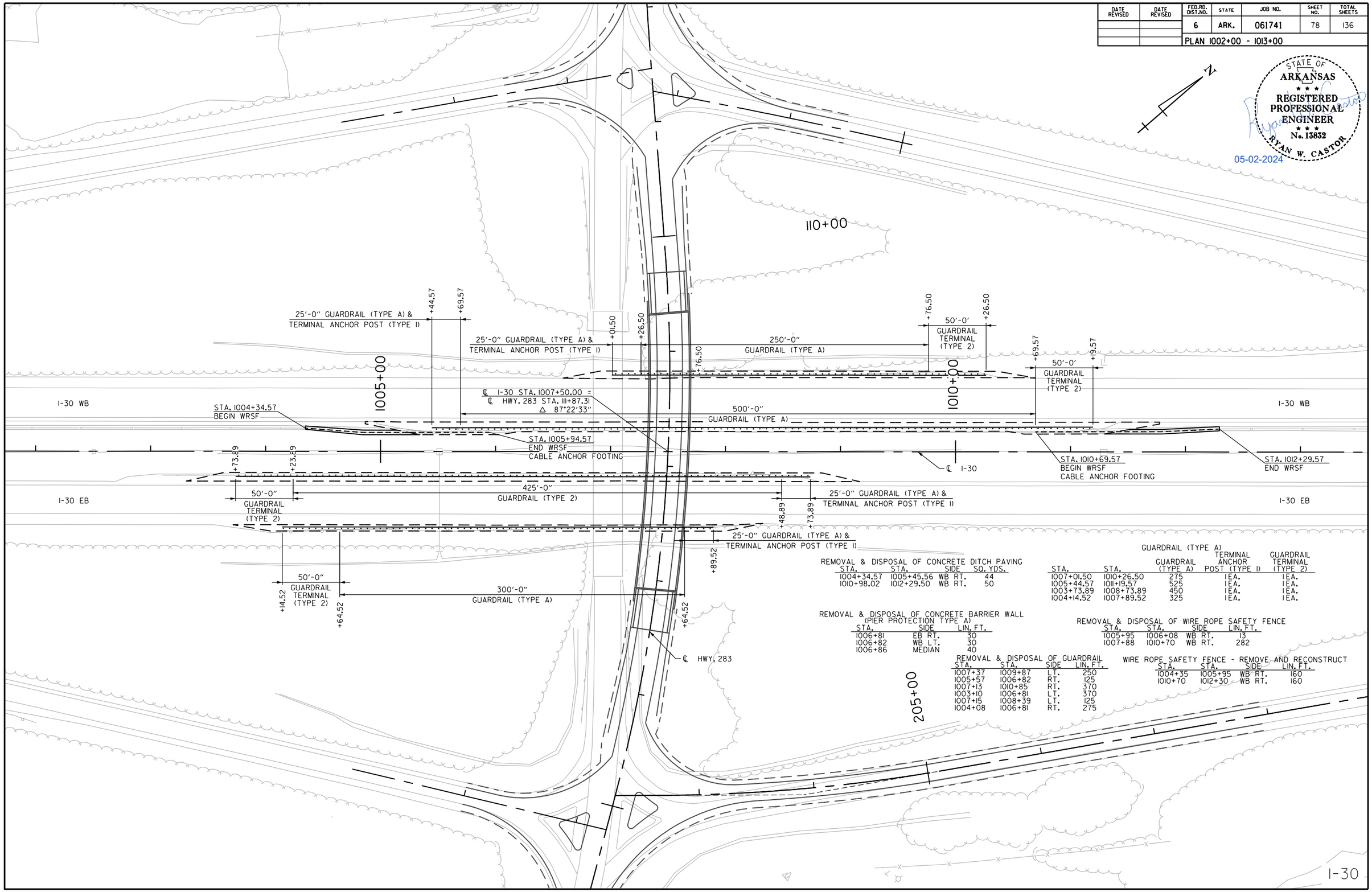

REMOVAL & DISPOSAL OF CONCRETE DITCH PAVING

STA.	STA.	SIDE	SQ. YDS.
1004+34.57	1005+45.56	WB RT.	44
1010+98.02	1012+29.50	WB RT.	50

GUARDRAIL (TYPE A)

STA.	STA.	GUARDRAIL (TYPE A)	TERMINAL ANCHOR POST (TYPE I)	GUARDRAIL TERMINAL (TYPE 2)
1007+01.50	1010+26.50	275	1 EA.	1 EA.
1005+44.57	1011+19.57	525	1 EA.	1 EA.
1003+73.89	1008+73.89	450	1 EA.	1 EA.
1004+14.52	1007+89.52	325	1 EA.	1 EA.

REMOVAL & DISPOSAL OF CONCRETE BARRIER WALL (PIER PROTECTION TYPE A)

STA.	SIDE	LIN. FT.
1006+81	EB RT.	30
1006+82	WB LT.	30
1006+86	MEDIAN	40

REMOVAL & DISPOSAL OF WIRE ROPE SAFETY FENCE

STA.	STA.	SIDE	LIN. FT.
1005+95	1006+08	WB RT.	13
1007+88	1010+70	WB RT.	282

REMOVAL & DISPOSAL OF GUARDRAIL

STA.	STA.	SIDE	LIN. FT.
1007+37	1009+87	LT.	250
1005+57	1006+82	RT.	125
1007+13	1010+85	RT.	370
1003+10	1006+81	LT.	370
1007+15	1008+39	LT.	125
1004+08	1006+81	RT.	275

WIRE ROPE SAFETY FENCE - REMOVE AND RECONSTRUCT

STA.	STA.	SIDE	LIN. FT.
1004+35	1005+95	WB RT.	160
1010+70	1012+30	WB RT.	160

5/2/2024
2:46:24 PM
...\PPr_061741_PP06a.dgn

DATE REVISED	DATE REVISED	FED.RD. DIST.NO.	STATE	JOB NO.	SHEET NO.	TOTAL SHEETS
		6	ARK.	061741	79	136
		DRIVEWAY PROFILES				

STATE OF ARKANSAS
REGISTERED PROFESSIONAL ENGINEER
No. 13832
RYAN W. CASTOR
05-02-2024

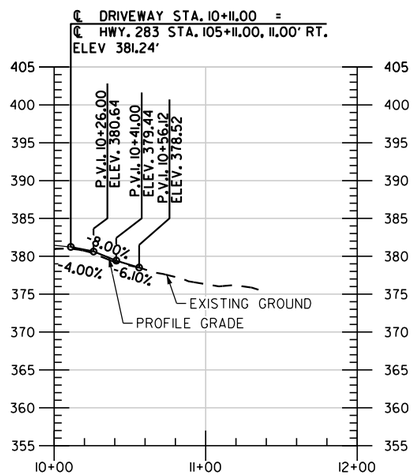

HWY. 283 - STA. 105+11

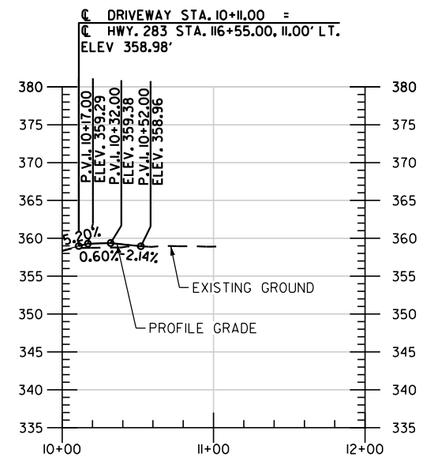

HWY. 283 - STA. 116+55

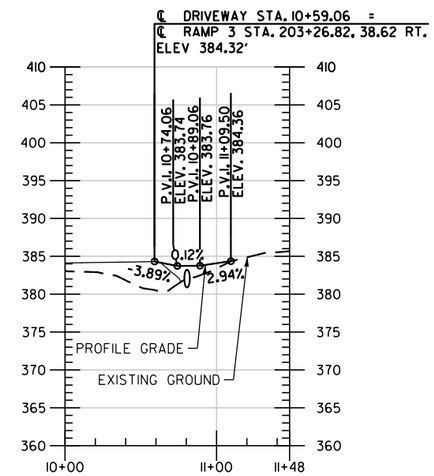

RAMP 3 - STA. 202+82

5/2/2024
2:46:29 PM
...\PPY\061741_PP07.dgn

DATE REVISED	DATE REVISED	FED. RD. DIST. NO.	STATE	JOB NO.	SHEET NO.	TOTAL SHEETS
		6	ARK.	061741	80	136
		07680 -		LAYOUT		- 67305

NOTES:
For R/W data, see Roadway Plans.

For Guardrail details, see Roadway Plans.

For additional grading details near bridge ends, see Roadway Plans.

Stations shown are along CL Construction. Elevations shown are actual top of deck elevations at CL Bridge with exception to elevations shown in "VERTICAL CURVE DATA" that are theoretical elevations along CL Construction. See "SUPERELEVATION TRANSITION SKETCH" for details.

Place Type F Approach Gutters and Type F Approach Slabs ("W" = 30'-0") at both ends of bridge. For details, see Std. Dwg. Nos. 55030F and 55040F1, respectively.

CL Bridge is on a 04°00'00" curve right. CL Girders and the longitudinal lines of both the bridge and approach gutters and slabs shall be constructed on curves concentric with CL Bridge and CL Construction. All bents shall be constructed on a 02°37'00" right forward skew to radial lines at CL Bridge and CL Construction. Skew is measured at CL Bent for Bent 2 and at CL Joint for Bents 1 and 3.

The Contractor shall excavate the existing embankment at Bent 1 to Elev. 378.00 at top of berm and Elev. 358.63 at bottom of roadway ditch and at Bent 3 to Elev. 371.50 at top of berm and Elev. 359.42 at bottom of roadway ditch, approximately 1666 cubic yards of excavation.

(1) CL Construction Sta. 111+87.31 = CL I-30 Median Sta. 1007+50.00

(2) Bent skew measured between CL Bent and local radial line to CL Construction at Sta 111+87.31

(3) Top of Crash Wall Elevation = 367.50

(4) Ashlar Stone Pattern. See Special Provision "ARCHITECTURAL FINISH".

(5) For additional details of Concrete Riprap, see Std. Dwg. No. 55002.

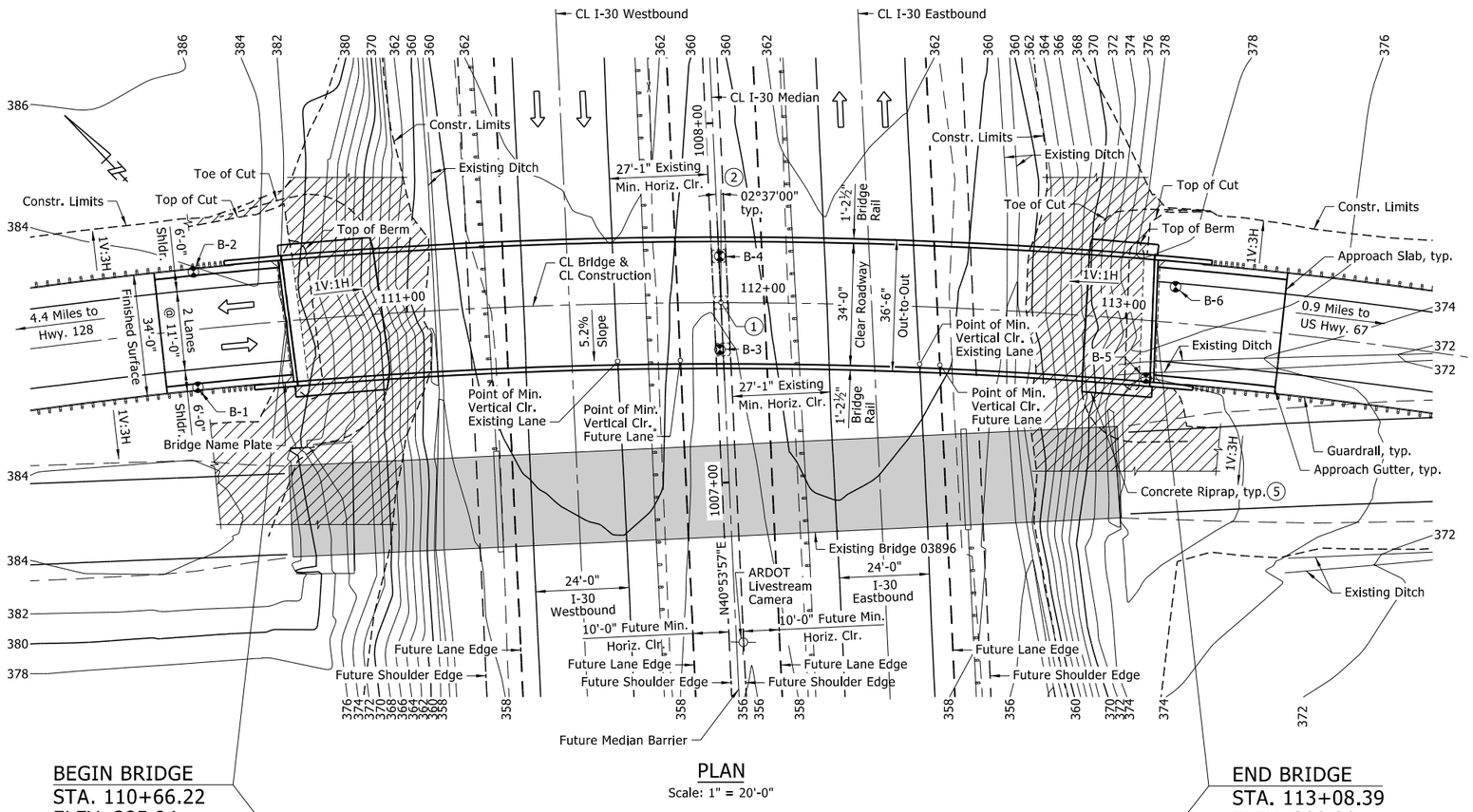

BEGIN BRIDGE
STA. 110+66.22
ELEV. 385.94

END BRIDGE
STA. 113+08.39
ELEV. 380.29

PLAN
Scale: 1" = 20'-0"

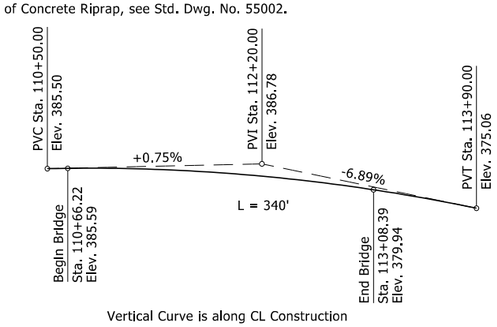

Vertical Curve is along CL Construction

VERTICAL CURVE DATA
No Scale

PI Sta. 112+53.70
Delta = 19°07'18" RT.
D = 04°00'00"
T = 241.27'
L = 478.05'

HORIZONTAL CURVE DATA

Begin Superelevation: Sta. 108+62.43 (N.C.)
Max Superelevation: Sta. 110+62.43 (5.20%)

SUPERELEVATION TRANSITION DATA

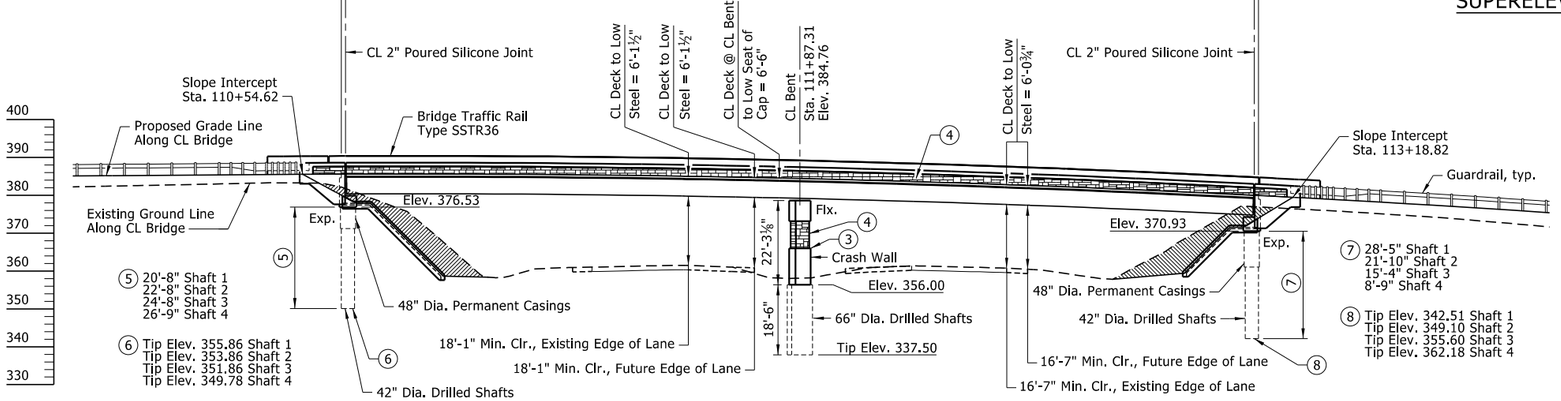

ELEVATION
Scale: 1" = 20'-0"

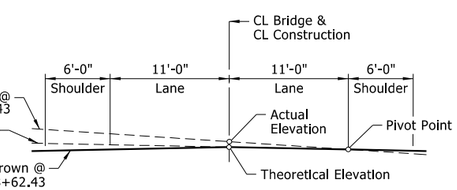

SUPERELEVATION TRANSITION SKETCH
Looking Ahead Station
No Scale

STATE OF ARKANSAS
LICENSED PROFESSIONAL ENGINEER
No. 17472
TRAVIS MICHAEL RAPP
7/24/2024
BRIDGE ENGINEER

SHEET 1 OF 5
LAYOUT OF BRIDGE
HIGHWAY 283 OVER INTERSTATE 30
I-30 STR. & APPRS. (HWY. 283) (S)
HOT SPRING COUNTY
ROUTE 283 SEC. 3

ARKANSAS STATE HIGHWAY COMMISSION
LITTLE ROCK, ARK.

DRAWN BY:	TLW	DATE:	2/2024	FILENAME:	b061741_l1
CHECKED BY:	HRA	DATE:	3/2024	SCALE:	AS SHOWN
DESIGNED BY:	CBM	DATE:	2/2024		

BRIDGE NO. 07680 DRAWING NO. 67305

DATE REVISED	DATE REVISED	FED. RD. DIST. NO.	STATE	JOB NO.	SHEET NO.	TOTAL SHEETS
		6	ARK.	061741	81	136
		07680 -		LAYOUT		- 67306

GENERAL NOTES:

BENCHMARK: Vertical Control Data are shown on the Survey Control Detail Sheets.

CONSTRUCTION SPECIFICATIONS: Arkansas State Highway and Transportation Department Standard Specifications for Highway Construction (2014 edition) with applicable Supplemental Specifications and Special Provisions. Section and Subsection refer to the Standard Construction Specifications unless otherwise noted in the plans.

DESIGN SPECIFICATIONS: AASHTO LRFD Bridge Design Specifications, Ninth Edition (2020).

FUTURE WEARING SURFACE DESIGN LOADING: 24 psf

LIVE LOADING: HL-93

SEISMIC ZONE: 1 S_{D1}: 0.112 SITE CLASS: C

SEISMIC OPERATIONAL CLASSIFICATION: Essential

MATERIALS AND STRENGTHS:

Class S(AE) Concrete (superstructure)	f'c =	4,000 psi
Class S Concrete (substructure)	f'c =	3,500 psi
Reinforcing Steel (AASHTO M 31 or M 322, Type A)	fy =	60,000 psi
Structural Steel (ASTM A709, Gr. 50)	Fy =	50,000 psi
Structural Steel (ASTM A709, Gr. 36)	Fy =	36,000 psi

BORING LOGS: Boring logs may be obtained from the Construction Contract Development Section of the Program Management Division.

STEEL PILING: All piling shall be HP12x53 (Grade 50) and shall be driven with an approved air, steam, or diesel hammer to a minimum safe bearing capacity of 95 tons per pile and into the material designated as Sandstone with Occasional Shale Layers on the boring legend at Bent 1 and into the materials designated as Sandstone and Shale on the boring legend at Bent 3. Minimum penetration shall be 10' below bottom of wing cap for all piling at Bents 1 and 3. Piling in wing caps shall be driven after embankment to bottom of wing is in place. Lengths shown are for estimating quantities and for use in determining payment for cut-off and build-up in accordance with Section 805. Actual pile lengths are to be determined in the field. The Contractor shall use QPL-approved steel H-Pile driving points on all piles.

PREBORING: Preboring is required for all piles at Bents 1 and 3. The depth of preboring shall be to a depth sufficient to provide the specified minimum penetration and to a minimum of 3' into the materials designated as Sandstone with Occasional Shale Layers (at Bent 1) or Sandstone and Shale (at Bent 3) on the boring legend, whichever is lower. The actual size and depth of preboring shall be determined in the field by the Engineer. The Contractor shall be responsible for keeping prebored holes free of debris prior to driving piles and backfilling which may require the use of temporary casings or other approved methods. After driving is completed, the prebored hole shall be backfilled with Class S Concrete to the top of the rock and the remaining length backfilled in accordance with Subsection 805.08(a). Any related cost for backfilling and temporary casing will not be paid for directly, but shall be considered subsidiary to the item "PREBORING".

DRILLED SHAFTS: Drilled shafts at Bents 1, 2, and 3 shall be constructed in accordance with Special Provision "DRILLED SHAFT FOUNDATIONS". Drilled shafts shall be socketed into material designated as Sandstone on the boring legend and to the minimum rock penetrations and tip elevations shown in the plans. No adjustment to plan tip elevations shall be made without prior approval from the Engineer. Temporary casing may be required.

NONDESTRUCTIVE TESTING: Crosshole Sonic Logging (CSL) shall be performed on each drilled shaft. Testing shall be performed in accordance with Special Provision "NONDESTRUCTIVE TESTING OF DRILLED SHAFTS".

PAINTING: All Grade 50 structural steel, except galvanized members and surfaces in contact with concrete, shall be painted as specified in Subsection 807.75. The color of paint shall be Dark Brown and shall match Federal Std. 595B, Color Chip No. 20108.

TEXTURED COATING FINISH: Class 3 Textured Coating Finish shall be applied to bridge surfaces as specified in Special Provision "TEXTURED COATING FINISH" and in accordance with Subsection 802.19(b)(3). Textured Coating Finish shall not be applied on surfaces where Class 2 Protective Surface Treatment is applied.

BRIDGE DECK: The concrete bridge deck shall be given a tine finish as specified for final finishing in Subsection 802.19 for Class 5 Tined Bridge Roadway Surface Finish.

PROTECTIVE SURFACE TREATMENT: Class 2 Protective Surface Treatment shall be applied to the roadway surface and to the roadway face and top of the concrete bridge traffic rails in accordance with Section 803.

DETAIL DRAWINGS:	DRAWING NO(S).
End Bent 1	67310 - 67314
Intermediate Bent 2	67315 - 67317
End Bent 3	67318 - 67322
Elastomeric Bearings	67323
240'-0" Continuous Plate Girder Unit	67324 - 67328
Standard General Notes for Steel Bridge Structures	55006
Standard Details for Steel Bridge Structures	55007
Standard Details for Poured Silicone Joints	55008
Standard Details for Type F Approach Gutters	55030F
Standard Details for Type F Approach Slab	55040F1
Standard Details for Bridge Traffic Rail Type SSTR36	55070

EXISTING BRIDGE: Existing Bridge No. 03896 (Log Mile 0.25) is 31.5' wide (26.0' clear roadway) and 231.0' long and consists of steel I-beam spans (4 spans total) supported by concrete columns on concrete spread footings. The existing bridge is located approximately 50' southwest from the proposed new bridge. Plans of the existing structure, if available, may be obtained upon request to the Construction Contract Development Section of the Program Management Division.

REMOVAL AND SALVAGE: After the new bridge is open to traffic, the Contractor shall remove existing Bridge No. 03896 in accordance with Section 205. All material from the existing bridge shall become the property of the Contractor except the following which shall remain the property of the State:

Aluminum Bridge Rail and Associated Hardware

The Contractor shall notify the Department prior to removal to determine the specific pieces deemed salvageable. The Contractor shall provide temporary storage and on site loading onto ArDOT equipment for removal of salvage items from the site. This work shall be considered incidental to the item "REMOVAL OF EXISTING BRIDGE STRUCTURE (SITE NO.__)".

MAINTENANCE OF TRAFFIC: See Roadway Plans.

STATE OF ARKANSAS
LICENSED PROFESSIONAL ENGINEER
No. 17472
TRAVIS MICHAEL RAPP
7/24/2024
BRIDGE ENGINEER

SHEET 2 OF 5
LAYOUT OF BRIDGE
HIGHWAY 283 OVER INTERSTATE 30
I-30 STR. & APPRS. (HWY. 283) (S)
HOT SPRING COUNTY
ROUTE 283 SEC. 3
ARKANSAS STATE HIGHWAY COMMISSION
LITTLE ROCK, ARK.

DRAWN BY: TLW DATE: 2/2024 FILENAME: b061741_l2
CHECKED BY: HRA DATE: 3/2024 SCALE: NONE
DESIGNED BY: CBM DATE: 2/2024

BRIDGE NO. 07680 DRAWING NO. 67306

DATE REVISED	DATE REVISED	FED. RD. DIST. NO.	STATE	JOB NO.	SHEET NO.	TOTAL SHEETS
		6	ARK.	061741	82	136
		07680 -		LAYOUT		- 67307

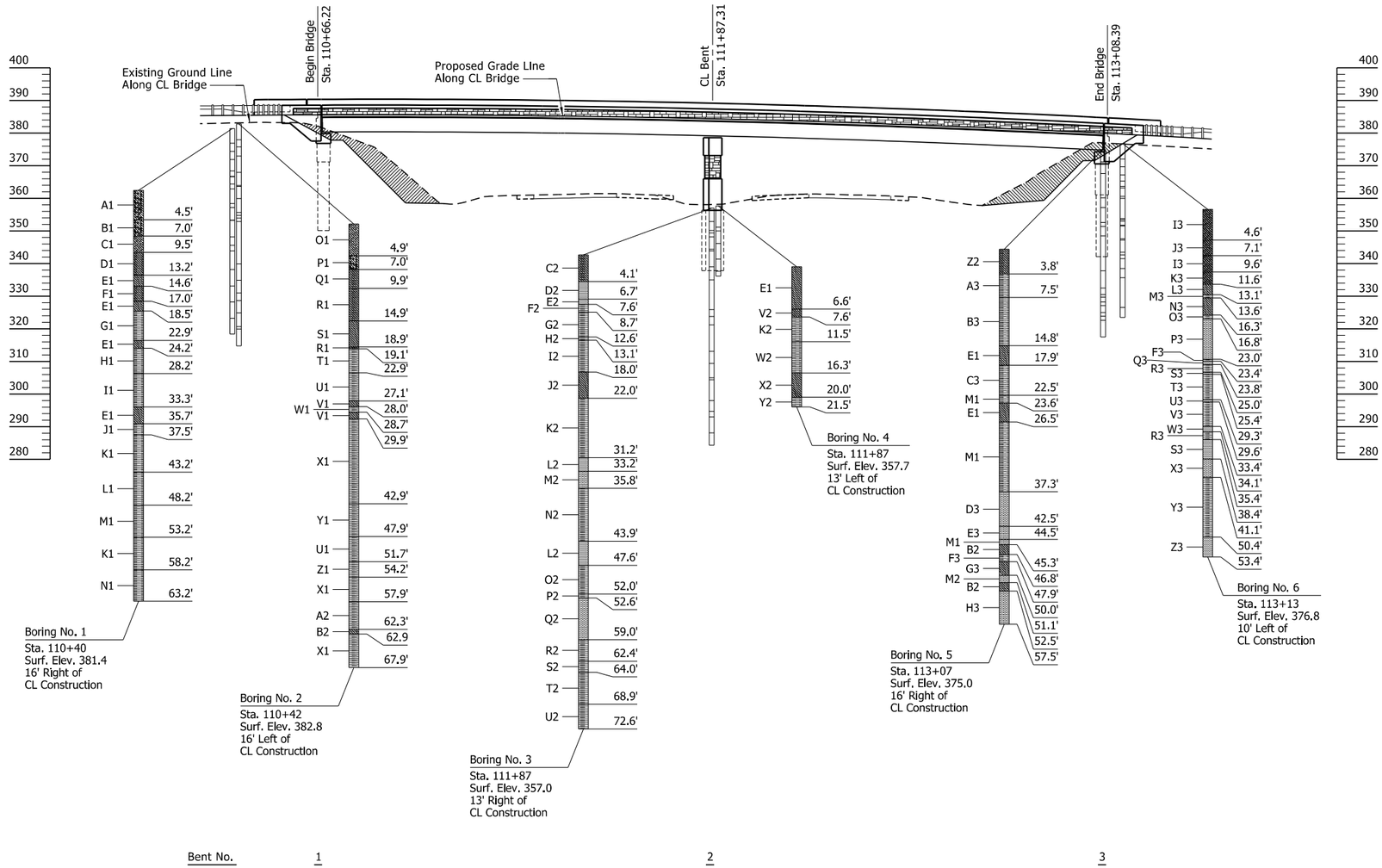

NOTE:
For "BORING LEGEND", see Dwg. No. 67308.

ELEVATION OF SOIL BORINGS

STATE OF ARKANSAS
LICENSED PROFESSIONAL ENGINEER
No. 17472
TRAVIS MICHAEL RAPP
7/24/2024
BRIDGE ENGINEER

SHEET 3 OF 5
LAYOUT OF BRIDGE
HIGHWAY 283 OVER INTERSTATE 30
I-30 STR. & APPRS. (HWY. 283) (S)
HOT SPRING COUNTY
ROUTE 283 SEC. 3
ARKANSAS STATE HIGHWAY COMMISSION
LITTLE ROCK, ARK.

DRAWN BY: TLW DATE: 2/2024 FILENAME: b061741_I3
CHECKED BY: HRA DATE: 3/2024 SCALE: 1" = 20'-0"
DESIGNED BY: CBM DATE: 2/2024
BRIDGE NO. 07680 DRAWING NO. 67307

DATE REVISED	DATE REVISED	FED. RD. DIST. NO.	STATE	JOB NO.	SHEET NO.	TOTAL SHEETS
		6	ARK.	061741	83	136
		07680 -		LAYOUT		- 67308

BORING LEGEND

A1 - Moist, Loose, Reddish Brown Clayey Sand with Rock Fragments
B1 - Moist, Medium Dense, Reddish Brown Clayey Sand with Rock Fragments
C1 - Moist, Very Dense, Clayey Sand with Trace Rock Fragments
D1 - SANDSTONE - Highly Weathered, Poorly Cemented with Cemented Layers, Brown
E1 - SHALE - Highly Weathered, Soft, Gray
F1 - SANDSTONE WITH OCCASIONAL SHALE LAYERS - Highly Weathered, Poorly Cemented, Gray
G1 - SANDSTONE - Weathered, Cemented, Frequent Fractures, Gray
H1 - SANDSTONE - Slightly Weathered, Cemented with Occasional Poorly Cemented Layers, Frequent Fractures, Gray
I1 - SANDSTONE - Slightly Weathered, Cemented to Well Cemented, Frequent Open Fractures, Frequent Voids
J1 - SANDSTONE - Weathered, Cemented, Gray
K1 - SANDSTONE - Slightly Weathered, Well Cemented, Frequent Open Fractures, Occasional Quartz Veins, Gray
L1 - SANDSTONE - Slightly Weathered, Well Cemented with Occasional Poorly Cemented Layers, Occasional Kaolin Layers, Frequent Fractures, Gray
M1 - SANDSTONE - Slightly Weathered, Well Cemented, Frequent Fractures, Gray
N1 - SANDSTONE WITH OCCASIONAL SHALE LAYERS - Slightly Weathered, Well Cemented, Frequent Fractures, Shale exhibits slickensides, Gray
O1 - Dry, Medium Dense, Brown Clayey Sand
P1 - Moist, Dense, Reddish Brown Clayey Sand with Rock Fragments
Q1 - SANDSTONE WITH CLAY LAYERS - Highly Weathered, Light Reddish Brown
R1 - SANDSTONE - Highly Weathered
S1 - SHALE - Highly Weathered, Medium Hard, Gray
T1 - SANDSTONE WITH OCCASIONAL SHALE LAYERS - Slightly Weathered with Occasional Highly Weathered Layers, Cemented with Poorly Cemented Layers, Frequent Fractures, Light Gray
U1 - SANDSTONE - Slightly Weathered, Cemented, Frequent Fractures, Light Gray
V1 - SHALE WITH OCCASIONAL SANDSTONE LAYERS - Highly Weathered, Soft, Gray
W1 - SANDSTONE - Slightly Weathered, Cemented, Light Gray
X1 - SANDSTONE - Slightly Weathered, Well Cemented, Frequent Fractures, Light Gray
Y1 - SANDSTONE - Slightly Weathered, Well Cemented, Occasional Fractures, Light Gray
Z1 - SANDSTONE - Slighty Weathered, Poorly Cemented, Frequent Fractures, Light Gray
A2 - SANDSTONE WITH OCCASIONAL SHALE LAYERS - Slightly Weathered (Shale-Highly Weathered), Well Cemented, Occasional Fractures, Light Gray
B2 - SHALE - Highly Weathered, Soft, Dark Gray
C2 - SANDSTONE - Highly Weathered, Poorly Cemented, Brown
D2 - SHALE - Highly Weathered, Medium Hard, Dark Gray
E2 - (No Recovery)
F2 - SANDSTONE - Weathered, Cemented, Brown and Gray
G2 - SANDSTONE WITH OCCASIONAL SHALE LAYERS - Slightly Weathered, Occasional Fractures, Cemented to Well Cemented
H2 - SANDSTONE - Weathered, Poorly Cemented, Brown
I2 - SANDSTONE WITH OCCASIONAL SHALE LAYERS - Slightly Weathered, Cemented to Well Cemented, Occasional Fractures, Gray
J2 - SHALE WITH OCCASIONAL SANDSTONE LAYERS - Weathered to Highly Weathered, Medium Hard, Dark Gray
K2 - SANDSTONE WITH OCCASIONAL CLAY SEAMS - Slightly Weathered, Well Cemented, Occasional Fractures, Gray
L2 - SHALE - Weathered to Slightly Weathered, Medium Hard, Dark Gray
M2 - SANDSTONE WITH FREQUENT SHALE LAYERS - Slightly Weathered, Cemented, Gray
N2 - SANDSTONE - Slightly Weathered, Cemented to Well Cemented, Frequent Fractures, Gray
O2 - SANDSTONE WITH OCCASIONAL SHALE LAYERS - Unweathered, Cemented, Occasional Fractures, Frequent Quartz Veins, Gray
P2 - SANDSTONE - Unweathered, Poorly Cemented, Gray
Q2 - SANDSTONE WITH FREQUENT SHALE LAYERS - Slightly Weathered, Cemented, Frequent Quartz Veins, Gray
R2 - SANDSTONE WITH OCCASIONAL SHALE LAYERS - Unweathered, Cemented with Poorly Cemented Layers
S2 - SANDSTONE - Weathered with Highly Weathered Layers, Cemented with Poorly Cemented Layers, Brown
T2 - SANDSTONE - Slightly Weathered and Highly Weathered along Fractures, Well Cemented, Frequent Fractures, Brown and Gray
U2 - SANDSTONE WITH OCCASIONAL SHALE SEAMS AND LAYERS - Unweathered, Cemented, Gray
V2 - SANDSTONE - Highly Weathered, Brown
W2 - SANDSTONE - Slightly Weathered, Well Cemented, Occasional Fractures, Gray
X2 - SHALE WITH OCCASIONAL SANDSTONE LAYERS - Weathered, Soft (Shale) and Poorly Cemented to Cemented (Sandstone), Dark Gray
Y2 - SANDSTONE WITH OCCASIONAL SHALE SEAMS - Slightly Weathered, Cemented, Gray
Z2 - SANDSTONE - Highly Weathered, Poorly Cemented, Light Brown
A3 - SANDSTONE - Slightly Weathered with Highly Weathered Layers, Well Cemented with Poorly Cemented Layers, Frequent Fractures, Gray
B3 - SANDSTONE WITH OCCASIONAL CLAY SEAMS - Slightly Weathered, Well Cemented with Cemented Layers, Frequent Fractures, Gray
C3 - SANDSTONE WITH OCCASIONAL CLAY SEAMS - Slightly Weathered with Highly Weathered Layers, Well Cemented with Cemented Layers, Frequent Fractures, Gray
D3 - SANDSTONE WITH FREQUENT SHALE LAYERS - Highly Weathered to Weathered, Poorly Cemented to Cemented, Frequent Fractures, Reddish Brown and Dark Gray
E3 - SHALE WITH FREQUENT SANDSTONE LAYERS - Highly Weathered, Soft, Dark Gray
F3 - SANDSTONE - Slightly Weathered, Well Cemented, Gray
G3 - SHALE WITH OCCASIONAL SANDSTONE LAYERS - Highly Weathered to Weathered, Soft to Medium Hard, Dark Gray
H3 - SANDSTONE INTERBEDDED WITH SHALE - Unweathered (Sandstone) to Highly Weathered (Shale), Well Cemented (Sandstone) to Soft (Shale), Gray to Dark Gray
I3 - Dry, Very Stiff, Reddish Brown Sandy Lean Clay
J3 - Dry, Hard, Reddish Brown Sandy Lean Clay
K3 - Dry, Very Hard, Reddish Brown Sandy Clay
L3 - SHALE - Highly Weathered, Medium Hard, Steeply Dipping, Light Gray to Gray
M3 - SANDSTONE - Weathered, Cemented, Steeply Dipping, Gray
N3 - SHALE WITH OCCASIONAL SANDSTONE LAYERS - Highly Weathered, Soft to Medium Hard, Frequent Fractures, Steeply Dipping, Gray
O3 - SANDSTONE WITH OCCASIONAL SHALE LAYERS - Highly Weathered, Poorly Cemented, Steeply Dipping, Gray
P3 - SHALE WITH FREQUENT SANDSTONE LAYERS - Highly Weathered, Dark Gray to Gray
Q3 - SHALE - Slightly Weathered, Medium Hard, Dark Gray
R3 - SANDSTONE - Slightly Weathered, Cemented, Gray
S3 - SHALE - Weathered, Medium Hard, Dark Gray
T3 - SANDSTONE - Slightly Weathered, Cemented to Well Cemented, Occasional Fractures, Occasional Clay Seams, Gray
U3 - SHALE - Weathered, Soft to Medium Hard, Gray
V3 - SANDSTONE - Slightly Weathered, Cemented, Occasional Fractures, Gray
W3 - SHALE - Weathered, Medium Hard, Dark Gray
X3 - SHALE WITH FREQUENT SANDSTONE LAYERS - Slightly Weathered, Medium Hard, Dark Gray
Y3 - SANDSTONE WITH OCCASIONAL SHALE LAYERS - Slightly Weathered, Cemented to Well Cemented, Frequent Fractures, Gray
Z3 - SHALE WITH OCCASIONAL SANDSTONE LAYERS - Slightly Weathered, Medium Hard, Dark Gray

"N" VALUES

Boring No. 1
Sta. 110+40
16' Right of CL Construction

3.0 - 4.0, N = 9
5.0 - 6.0, N = 21
7.0 - 7.5, N = 60 (6")
9.5 - 9.8, N = 60 (4")

Boring No. 2
Sta. 110+42
16' Left of CL Construction

3.0 - 4.0, N = 24
5.4 - 6.4, N = 40
7.9 - 8.1, N = 60 (2")
10.4 - 10.8, N = 60 (5")
15.4 - 16.4, N = 80
18.9 - 19.1, N = 60 (2")

Boring No. 3
Sta. 111+87
13' Right of CL Construction

2.5 - 3.4, N = 113 (11")
4.6 - 5.2, N = 119 (7")
6.6 - 6.7, N = 60 (1")

Boring No. 4
Sta. 111+87
13' Left of CL Construction

2.2 - 3.2, N = 33
4.6 - 5.6, N = 56
7.1 - 7.4, N = 60 (4")

Boring No. 5
Sta. 113+07
16' Right of CL Construction

2.5 - 2.9, N = 60 (5")
3.6 - 3.8, N = 60 (2")

Boring No. 6
Sta. 113+13
10' Left of CL Construction

3.0 - 4.0, N = 29
5.1 - 6.1, N = 35
7.6 - 8.6, N = 19
9.6 - 10.1, N = 60 (6")
12.1 - 12.4, N = 50 (4")

STATE OF ARKANSAS
LICENSED PROFESSIONAL ENGINEER
No. 17472
TRAVIS MICHAEL RAPP
7/24/2024
BRIDGE ENGINEER

SHEET 4 OF 5
LAYOUT OF BRIDGE
HIGHWAY 283 OVER INTERSTATE 30
I-30 STR. & APPRS. (HWY. 283) (S)
HOT SPRING COUNTY
ROUTE 283 SEC. 3
ARKANSAS STATE HIGHWAY COMMISSION
LITTLE ROCK, ARK.

DRAWN BY: TLW DATE: 2/2024 FILENAME: b061741_l4
CHECKED BY: HRA DATE: 3/2024 SCALE: NONE
DESIGNED BY: CBM DATE: 2/2024

BRIDGE NO. 07680 DRAWING NO. 67308

DATE REVISED	DATE REVISED	FED. RD. DIST. NO.	STATE	JOB NO.	SHEET NO.	TOTAL SHEETS
		6	ARK.	061741	84	136
		07680 -		LAYOUT		- 67309

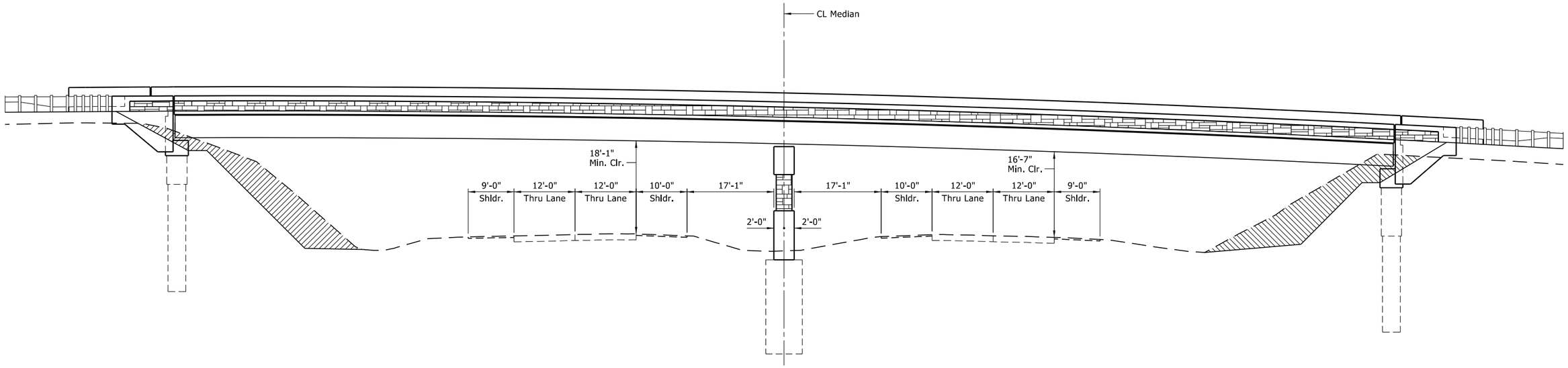

SECTION THROUGH EXISTING PAVEMENT

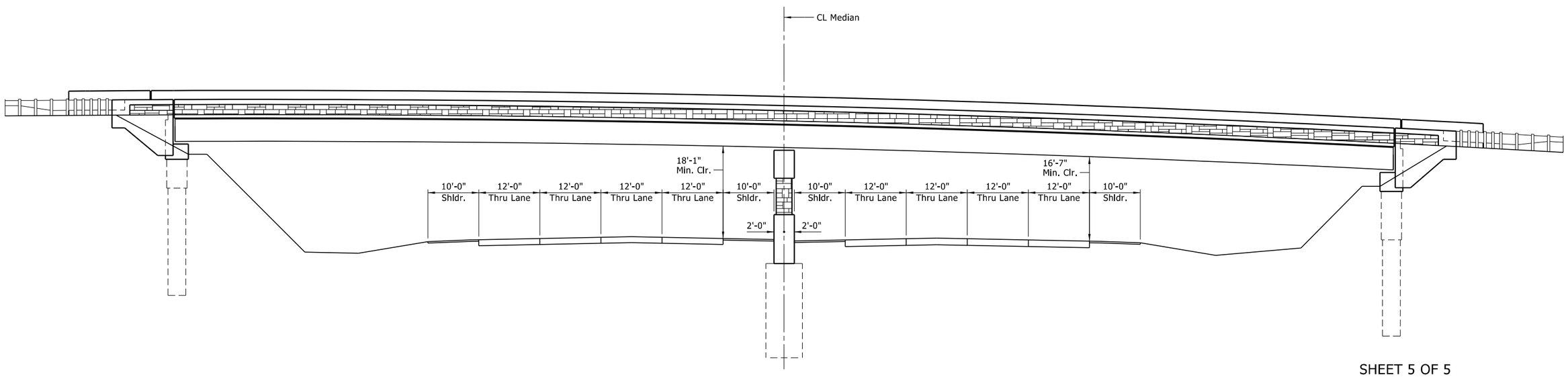

SECTION THROUGH FUTURE WIDENING (BY OTHERS)

STATE OF ARKANSAS
LICENSED PROFESSIONAL ENGINEER
No. 17472
TRAVIS MICHAEL RAPP
7/24/2024

BRIDGE ENGINEER

SHEET 5 OF 5
LAYOUT OF BRIDGE
HIGHWAY 283 OVER INTERSTATE 30
I-30 STR. & APPRS. (HWY. 283) (S)
HOT SPRING COUNTY

ROUTE 283 SEC. 3

ARKANSAS STATE HIGHWAY COMMISSION

LITTLE ROCK, ARK.

DRAWN BY: JCR DATE: 2/2024 FILENAME: b061741_l5
CHECKED BY: HRA DATE: 3/2024 SCALE: 1" = 10'-0"
DESIGNED BY: CBM DATE: 2/2024

BRIDGE NO. 07680 DRAWING NO. 67309

DATE REVISED	DATE REVISED	FED. RD. DIST. NO.	STATE	JOB NO.	SHEET NO.	TOTAL SHEETS
		6	ARK.	061741	85	136
		07680 -		BENT 1		- 67310

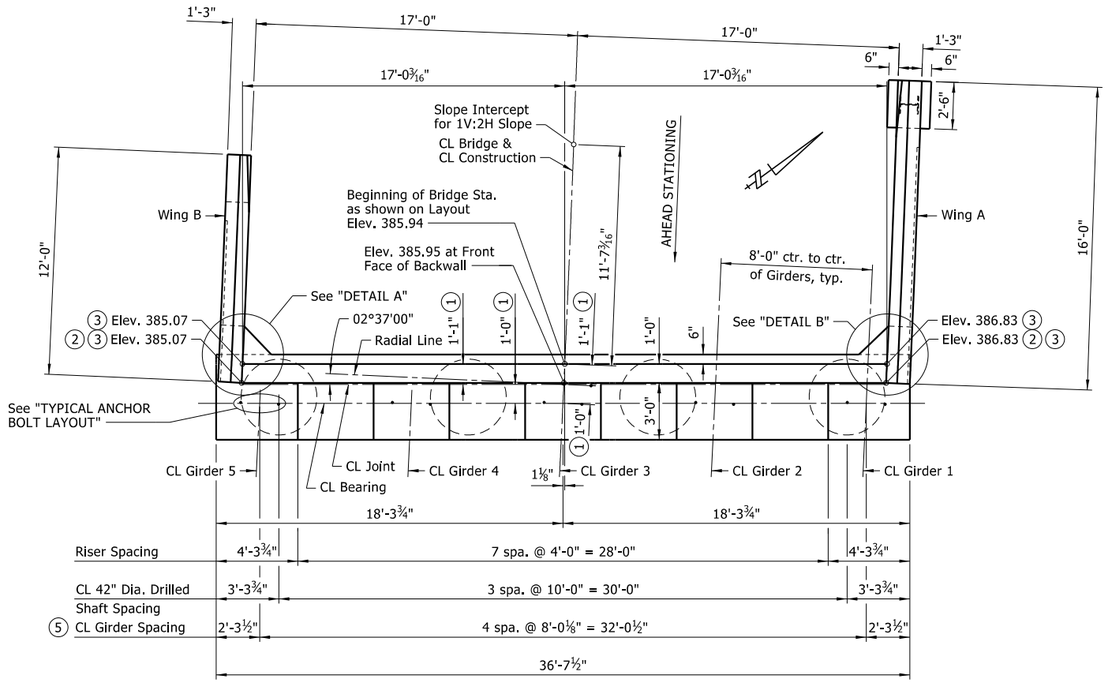

PLAN

Scale: ¼" = 1'-0"

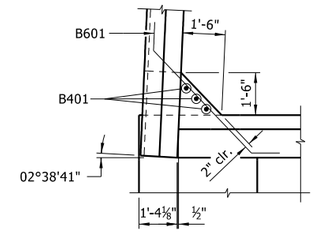

DETAIL A

Scale: ⅜" = 1'-0"

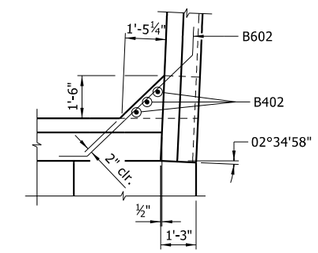

DETAIL B

Scale: ⅜" = 1'-0"

NOTES:
CL Bridge is on a 04°00'00" curve right. Wings and Rails are to be constructed on curves concentric with CL Bridge and CL Construction. Skew is measured at CL Joint.

Drilled shaft tie reinforcement not shown for clarity. For additional details of reinforcing in drilled shafts, see Dwg. No. 67314.

For Section A-A, Section B-B, View C-C, and View D-D, see Dwg. No. 67311.

① Measured from CL Joint.

② At Front Face of Backwall.

③ At Top of Wing.

④ For additional details of Bridge Traffic Rail Type SSTR36, see Std. Dwg. No. 55070.

⑤ Measured along CL Bearing

Bearing seat elevations shall be ± ⅛" per the Standard Specifications.

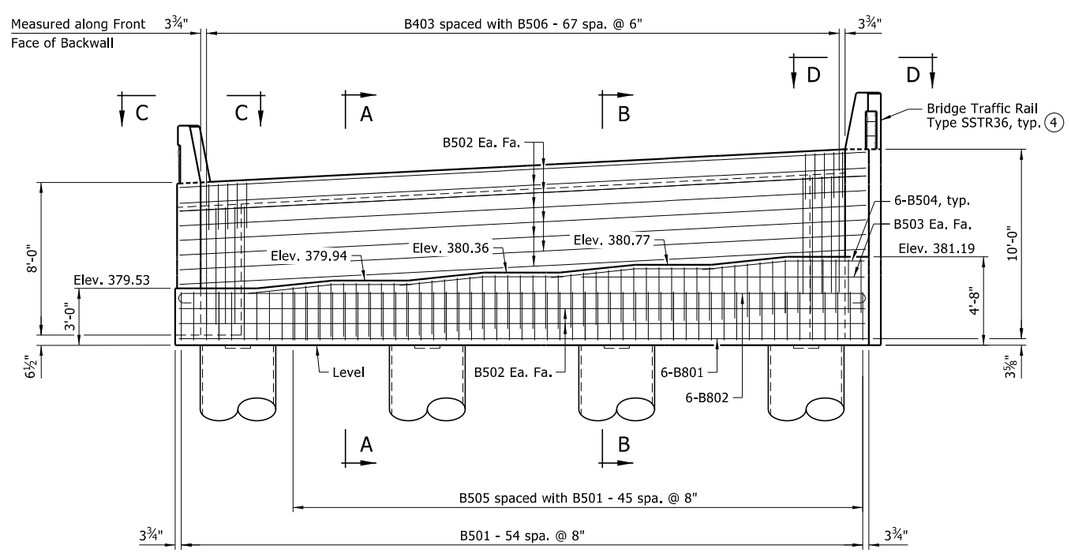

ELEVATION

Looking Back Station
Scale: ¼" = 1'-0"

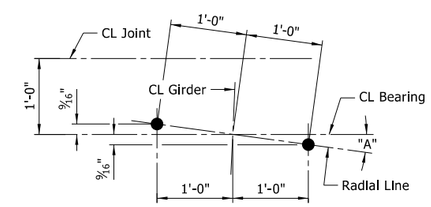

GIRDER NO.	"A"
1	02°37'38"
2	02°38'31"
3	02°39'24"
4	02°40'18"
5	02°41'12"

TYPICAL ANCHOR BOLT LAYOUT

For details of Elastomeric Bearings, see Dwg. No. 67323.
Scale: 1" = 1'-0"

STATE OF ARKANSAS
LICENSED PROFESSIONAL ENGINEER
No. 17472
TRAVIS MICHAEL RAPP
7/24/2024
BRIDGE ENGINEER

SHEET 1 OF 5
DETAILS OF BENT 1
ROUTE SEC.
ARKANSAS STATE HIGHWAY COMMISSION
LITTLE ROCK, ARK.

DRAWN BY: TLW DATE: 2/2024 FILENAME: b061741_b11
CHECKED BY: TG DATE: 2/2024 SCALE: AS SHOWN
DESIGNED BY: HRA DATE: 2/2024

BRIDGE NO. 07680 DRAWING NO. 67310

DATE REVISED	DATE REVISED	FED. RD. DIST. NO.	STATE	JOB NO.	SHEET NO.	TOTAL SHEETS
		6	ARK.	061741	86	136
		07680 -		BENT 1		- 67311

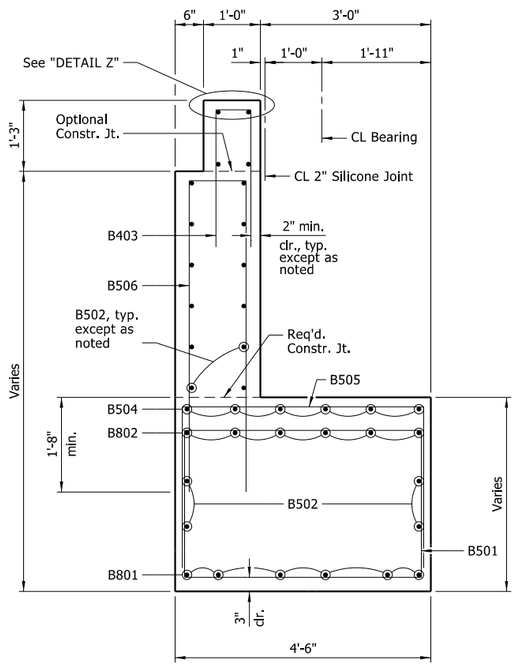

SECTION A-A

Scale: ¾" = 1'-0"

③ Minimum embedment of drilled shaft reinforcing into cap. For additional details, see "ELEVATION OF DRILLED SHAFTS" on Dwg. No. 67314.

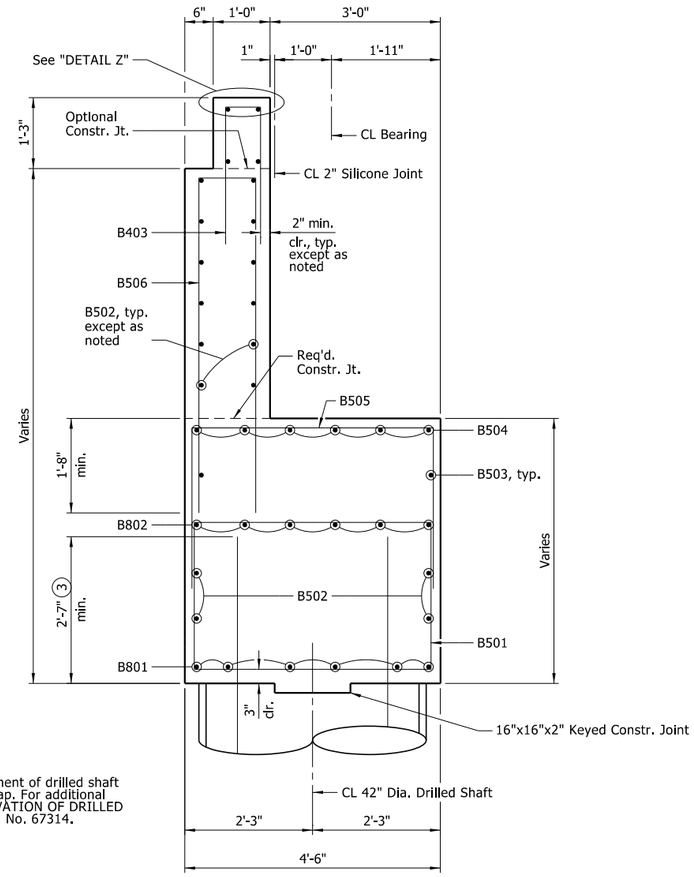

SECTION B-B

Scale: ¾" = 1'-0"

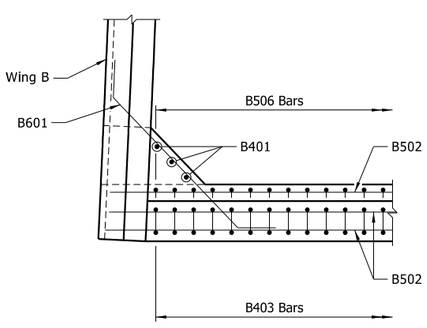

VIEW C-C

Scale: ½" = 1'-0"

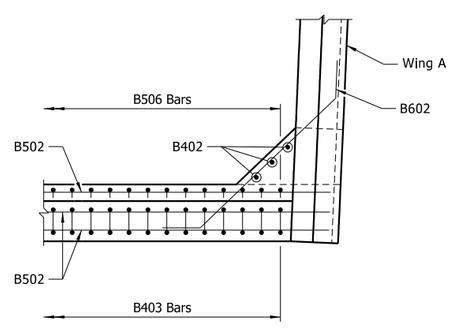

VIEW D-D

Scale: ½" = 1'-0"

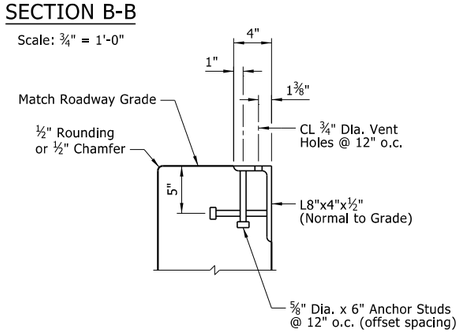

DETAIL Z

No Scale

NOTES:
Transverse spacing between vertical anchor studs and vent holes shall be 6".

Concrete shall be hand packed under the joint armor.

The profile of the backwall angle shall be established based on the vertical curve in conjunction with the skew.

For additional joint details, see Std. Dwg. No. 55008.

Special care shall be taken to properly and thoroughly consolidate the concrete in the vicinity of the expansion joint device in the backwall, see Subsection 802.09(a)(3).

BAR LIST

	MARK	NO. REQ'D.	LENGTH	P.D.
	B401	3	6'-4"	Str.
	B402	3	8'-3"	Str.
	B403	68	5'-4"	2"
	B501	55	14'-0"	2½"
	B502	20	36'-3"	Str.
	B503	2	14'-10"	Str.
	B504	24	8'-6"	2½"
	B505	46	9'-8"	2½"
	B506	68	13'-4"	2½"
	B601	8	6'-10"	4½"
	B602	8	7'-0"	4½"
	B801	6	36'-3"	Str.
	B802	6	38'-1"	6"
②	C501	216	10'-3"	3¾"
②	C901	14	23'-1"	Str.
②	C902	14	25'-1"	Str.
②	C903	14	27'-1"	Str.
②	C904	14	29'-2"	Str.
	F601	5	2'-2"	Str.
①	R401E	56	6'-4"	2½"
①	R402E	8	5'-6"	Str.
①	R408E	8	11'-8"	Str.
①	R409E	8	15'-8"	Str.
①	W401E	56	3'-11"	3¾"
	W402	5	12'-7"	2"
	W403	9	12'-7"	2"
	W501	6	7'-8"	Str.
	W502 To W508	2 Ea.	7'-5" To 2'-4"	Str.
	W509	8	2'-2"	Str.
	W510	6	9'-8"	Str.
	W511 To W521	2 Ea.	9'-5" To 2'-4"	Str.
	W601	8	4'-4"	4½"
	W701	10	11'-8"	Str.
	W702 To W711	2 Ea.	8'-9" To 3'-6"	Str.
	W712	2	12'-9"	5¼"
	W713	10	15'-8"	Str.
	W714 To W727	2 Ea.	12'-10" To 3'-7"	Str.
	W728	2	17'-0"	5¼"

BENDING DIAGRAMS

Bar dimensions are out-to-out. Bars with an "E" suffix are to be epoxy coated.

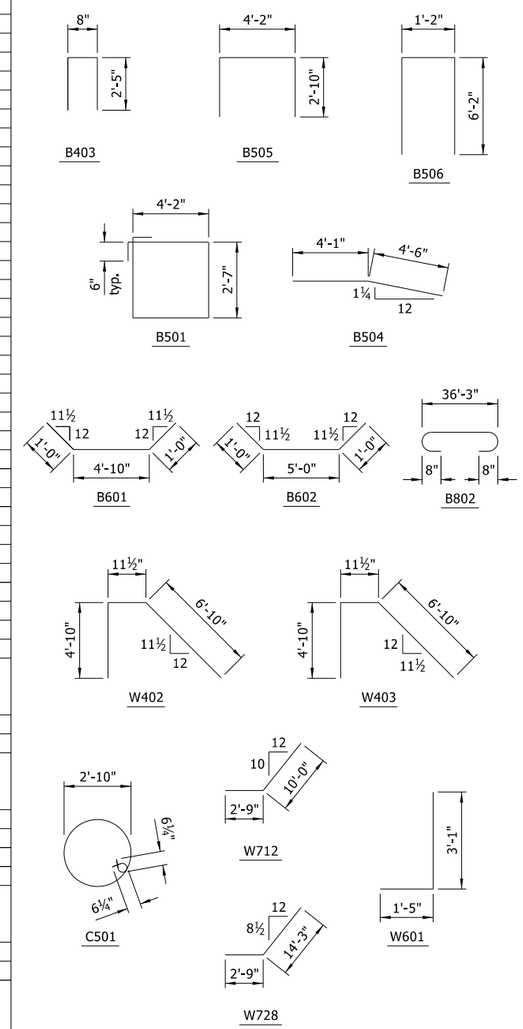

① For additional details of Bridge Traffic Rail Type SSTR36, see Std. Dwg. No. 55070 and Dwg. No. 67328 for "TABLE OF VARIABLES".

② Non-pay Item - See Special Provision "DRILLED SHAFT FOUNDATIONS". For additional details of Drilled Shaft, see Dwg. No. 67314.

STATE OF ARKANSAS
LICENSED PROFESSIONAL ENGINEER
No. 17472
TRAVIS MICHAEL RAPP
7/24/2024

BRIDGE ENGINEER

SHEET 2 OF 5
DETAILS OF BENT 1
ROUTE SEC.
ARKANSAS STATE HIGHWAY COMMISSION
LITTLE ROCK, ARK.

DRAWN BY: TWM DATE: 2/2024 FILENAME: b061741_b12
CHECKED BY: TG DATE: 2/2024 SCALE: AS SHOWN
DESIGNED BY: HRA DATE: 2/2024

BRIDGE NO. 07680 DRAWING NO. 67311

DATE REVISED	DATE REVISED	FED. RD. DIST. NO.	STATE	JOB NO.	SHEET NO.	TOTAL SHEETS
		6	ARK.	061741	87	136
		07680 -		BENT 1		- 67312

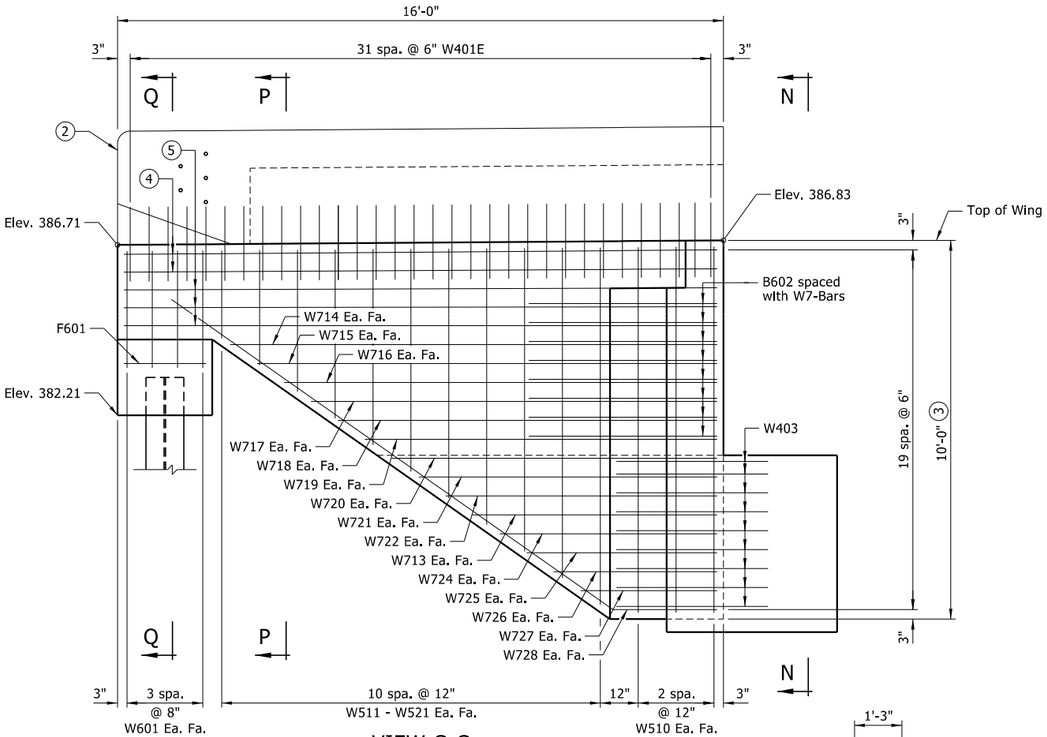

VIEW G-G

Scale: ½" = 1'-0"

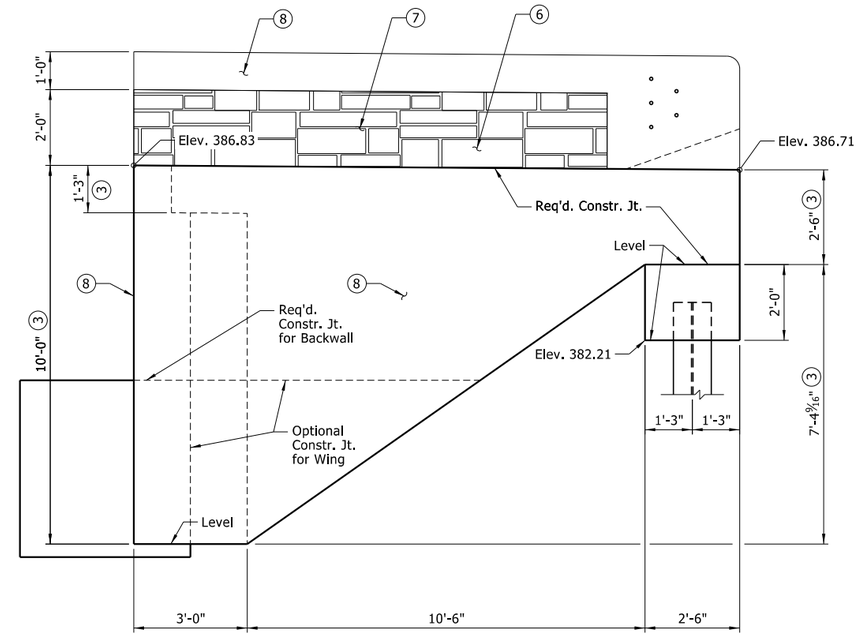

VIEW H-H

Scale: ½" = 1'-0"

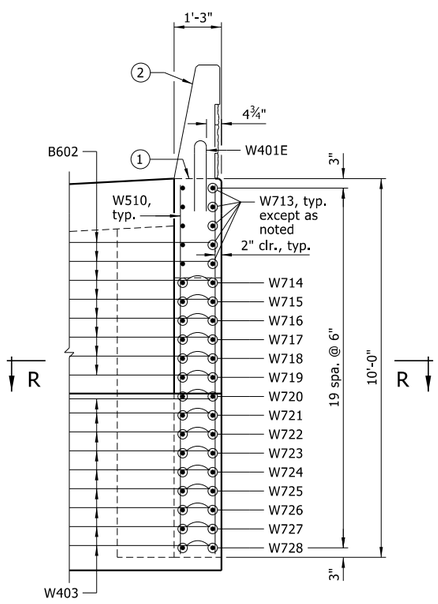

VIEW N-N

Scale: ½" = 1'-0"

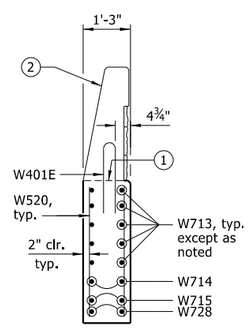

SECTION P-P

Scale: ½" = 1'-0"

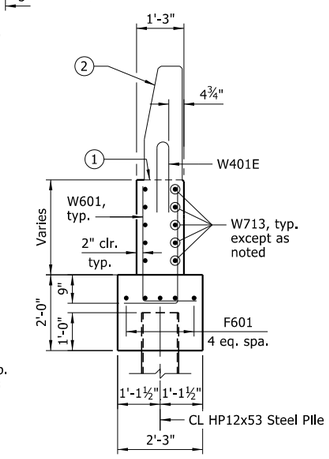

SECTION Q-Q

Scale: ½" = 1'-0"

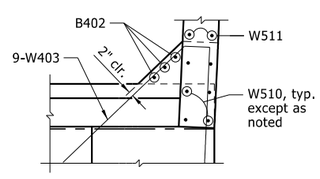

SECTION R-R

Scale: ⅜" = 1'-0"

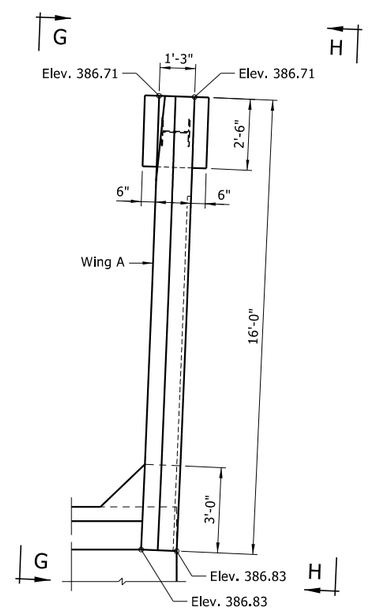

PLAN OF WING

Scale: ⅜" = 1'-0"

1. Required construction joint shall be level.
2. For additional details of Bridge Traffic Rail Type SSTR36, see Std. Dwg. No. 55070 and Dwg. No. 67328 for "TABLE OF VARIABLES".
3. Measured along inside face of wing.
4. W713 Ea. Fa. (Place Parallel to Grade)
5. W713 Ea. Fa.
6. Ashlar Stone Pattern Form Liner. See Special Provision "ARCHITECTURAL FINISH".
7. Class 3 Textured Coating Finish (Color = Brown, Color Chip No. 30219).
8. Class 3 Textured Coating Finish (Color = Brown, Color Chip No. 33522).

STATE OF ARKANSAS
LICENSED PROFESSIONAL ENGINEER
No. 17472
TRAVIS MICHAEL RAPP
7/24/2024

BRIDGE ENGINEER

SHEET 3 OF 5
DETAILS OF BENT 1

ROUTE SEC.

ARKANSAS STATE HIGHWAY COMMISSION

LITTLE ROCK, ARK.

DRAWN BY:	TWM	DATE:	2/2024	FILENAME:	b061741_b13
CHECKED BY:	TG	DATE:	2/2024	SCALE:	AS SHOWN
DESIGNED BY:	HRA	DATE:	2/2024		

BRIDGE NO. 07680 DRAWING NO. 67312

DATE REVISED	DATE REVISED	FED. RD. DIST. NO.	STATE	JOB NO.	SHEET NO.	TOTAL SHEETS
		6	ARK.	061741	88	136
		07680 -		BENT 1		- 67313

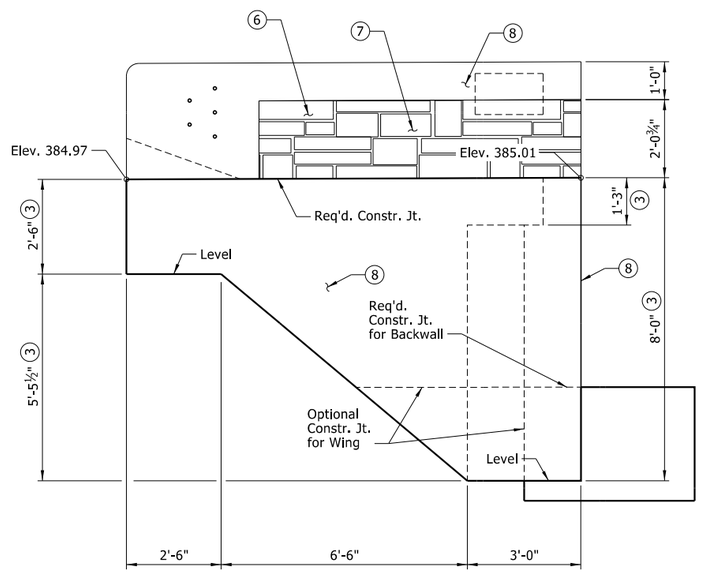

VIEW E-E

Scale: ½" = 1'-0"

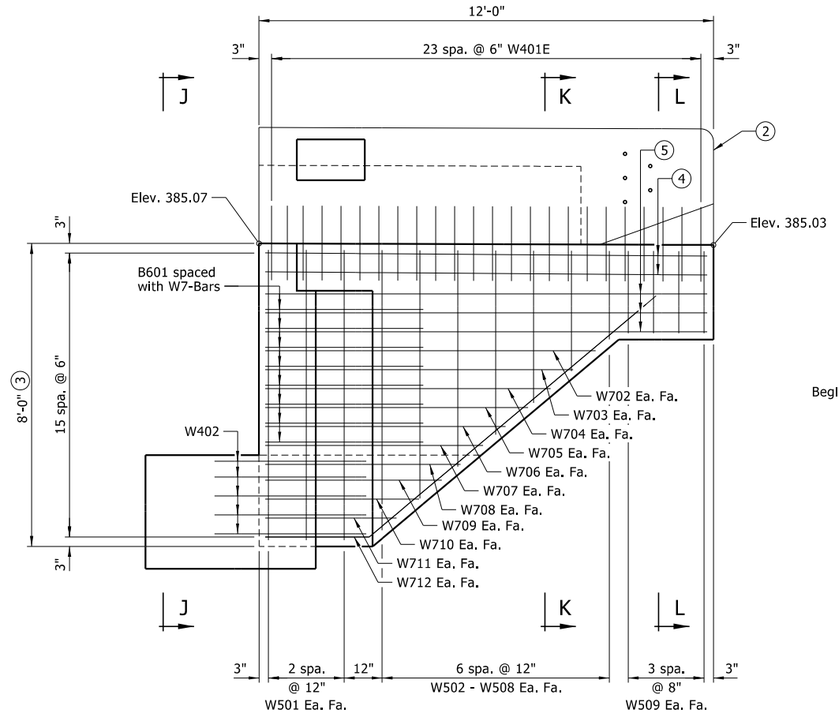

VIEW F-F

Scale: ½" = 1'-0"

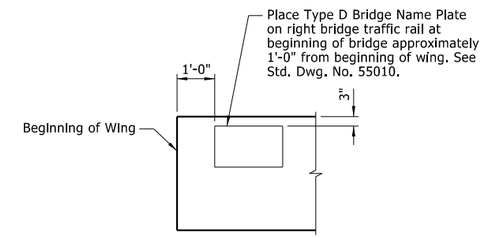

VIEW SHOWING LOCATION OF BRIDGE NAME PLATE

No Scale

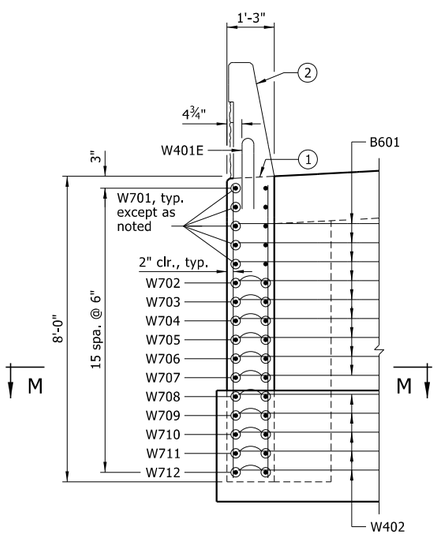

VIEW J-J

Scale: ½" = 1'-0"

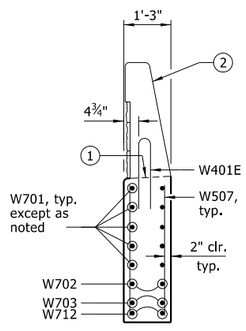

SECTION K-K

Scale: ½" = 1'-0"

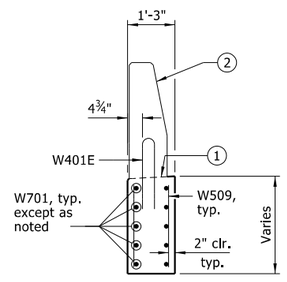

SECTION L-L

Scale: ½" = 1'-0"

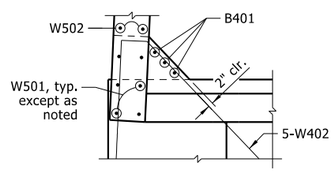

SECTION M-M

Scale: ⅜" = 1'-0"

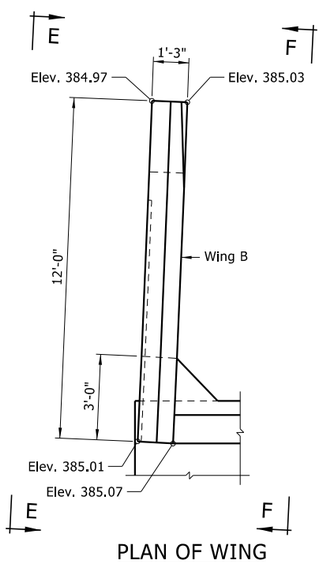

PLAN OF WING

Scale: ⅜" = 1'-0"

1. Required construction joint shall match roadway slope.
2. For additional details of Bridge Traffic Rail Type SSTR36, see Std. Dwg. No. 55070 and Dwg. No. 67328 for "TABLE OF VARIABLES".
3. Measured along inside face of wing.
4. W701 Ea. Fa. (Place Parallel to Grade)
5. W701 Ea. Fa.
6. Ashlar Stone Pattern Form Liner. See Special Provision "ARCHITECTURAL FINISH".
7. Class 3 Textured Coating Finish (Color = Brown, Color Chip No. 30219).
8. Class 3 Textured Coating Finish (Color = Brown, Color Chip No. 33522).

STATE OF ARKANSAS
LICENSED PROFESSIONAL ENGINEER
No. 17472
TRAVIS MICHAEL RAPP
7/24/2024
BRIDGE ENGINEER

SHEET 4 OF 5
DETAILS OF BENT 1
ROUTE SEC.
ARKANSAS STATE HIGHWAY COMMISSION
LITTLE ROCK, ARK.

DRAWN BY:	TLW	DATE:	2/2024	FILENAME:	b061741_b14
CHECKED BY:	TG	DATE:	2/2024	SCALE:	AS SHOWN
DESIGNED BY:	HRA	DATE:	2/2024		

BRIDGE NO. 07680 DRAWING NO. 67313

DATE REVISED	DATE REVISED	FED. RD. DIST. NO.	STATE	JOB NO.	SHEET NO.	TOTAL SHEETS
		6	ARK.	061741	89	136
		07680 -		BENT 1		- 67314

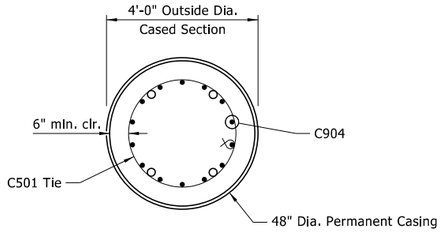

SECTION S-S

Scale: ½" = 1'-0"

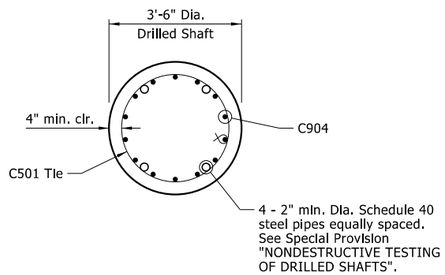

SECTION T-T

Scale: ½" = 1'-0"

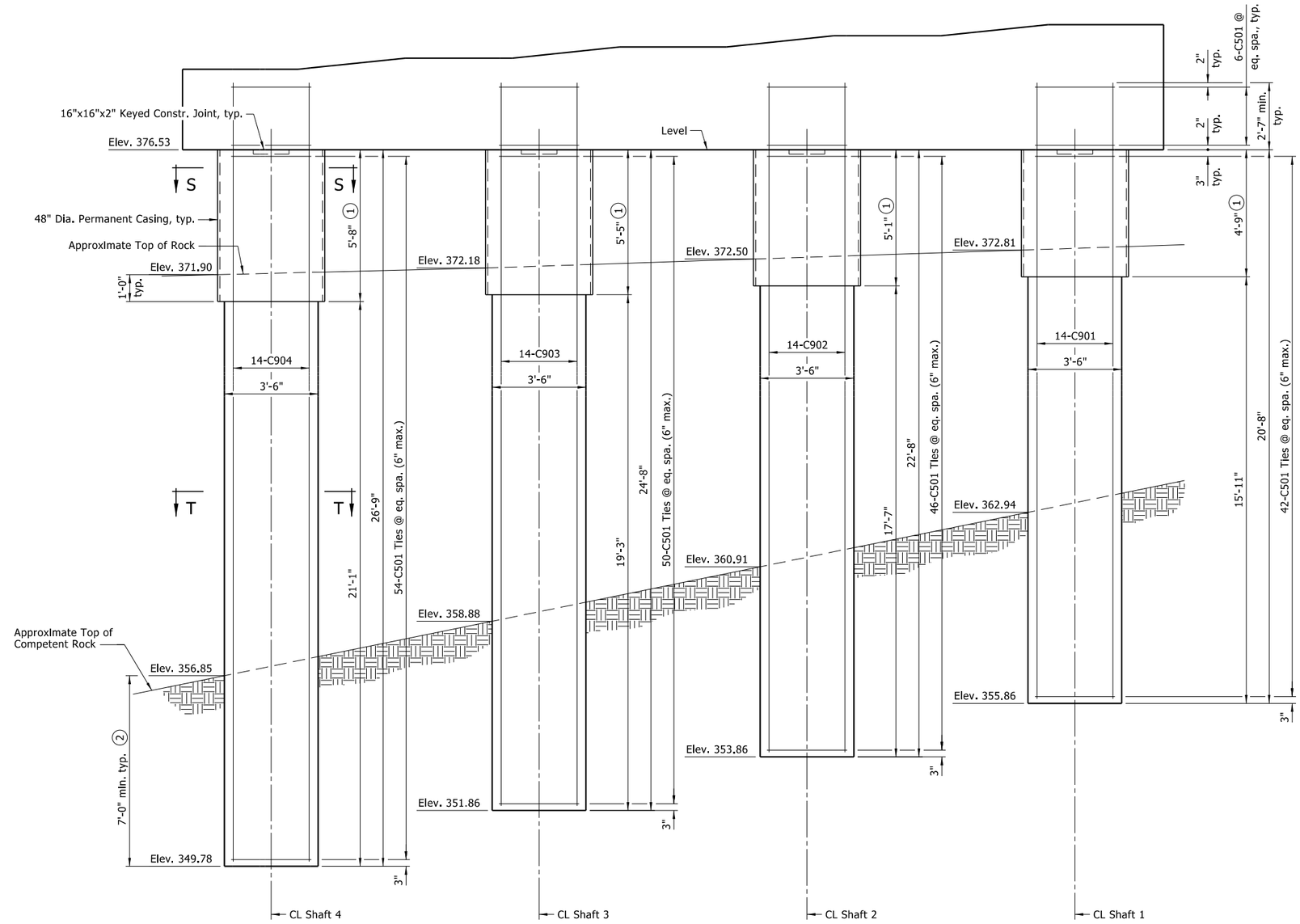

ELEVATION OF DRILLED SHAFTS

Looking Back Station
No Scale

NOTES:
Backwall above the required construction joint shall not be poured until the girders are in place. Backwall may be placed prior to placing the adjacent concrete deck only if the optional backwall construction joint is used. See "EXPANSION DEVICE INSTALLATION AT END BENTS" on Std. Dwg. No. 55008 for additional information. No heavy construction equipment or backfilling shall be allowed directly behind the backwall until the concrete for the adjacent span has been completed.

Finish top of backwall to match the bridge deck.

Structural Steel in end bents shall be ASTM A709, Gr. 50 and shall be paid for as "STRUCTURAL STEEL IN PLATE GIRDER SPANS (A709, GR. 50)".

Class 2 Protective Surface Treatment shall be applied to the top of backwall and to the roadway face and top of the concrete bridge traffic rails.

Concrete in the drilled shaft shall be Class S as modified by Special Provision "DRILLED SHAFT FOUNDATIONS".

All reinforcing steel shall be Grade 60 (yield strength = 60,000 psi) conforming to AASHTO M 31 or M 322, Type A, with mill test reports.

Top reinforcing bars shall be properly placed to avoid interference with anchor bolts or sheet metal sleeves.

Concrete and reinforcing steel placed in the drilled shaft will not be paid for directly but shall be considered subsidiary to the unit price bid for "DRILLED SHAFT (42" DIA.)". No additional payment shall be made for spacers, additional splices, or bracing needed for assembly, shipping, handling, or erecting. Drilled shafts shall conform to Special Provision "DRILLED SHAFT FOUNDATIONS" and shall be paid for at the unit price bid for "DRILLED SHAFT (42" DIA.)".

For additional General Notes, see Std. Dwg. No. 55006.

(1) Length of Permanent Casing shown is approximate. The 1 foot casing embedment into rock is approximate. The Contractor shall embed casing into rock to establish an adequate seal. Actual lengths of Permanent Casing are to be determined in the field. See Special Provision "DRILLED SHAFT FOUNDATIONS". Permanent casing shall not extend below top of competent rock without approval from the Engineer.

(2) Minimum penetration into competent rock.

STATE OF ARKANSAS
LICENSED PROFESSIONAL ENGINEER
No. 17472
TRAVIS MICHAEL RAPP
7/24/2024
BRIDGE ENGINEER

SHEET 5 OF 5
DETAILS OF BENT 1
ROUTE SEC.
ARKANSAS STATE HIGHWAY COMMISSION
LITTLE ROCK, ARK.

DRAWN BY:	TLW	DATE:	2/2024	FILENAME:	b061741_b15
CHECKED BY:	TG	DATE:	2/2024	SCALE:	AS SHOWN
DESIGNED BY:	HRA	DATE:	2/2024		

BRIDGE NO. 07680 DRAWING NO. 67314

DATE REVISED	DATE REVISED	FED. RD. DIST. NO.	STATE	JOB NO.	SHEET NO.	TOTAL SHEETS
		6	ARK.	061741	90	136
		07680 -		BENT 2		- 67315

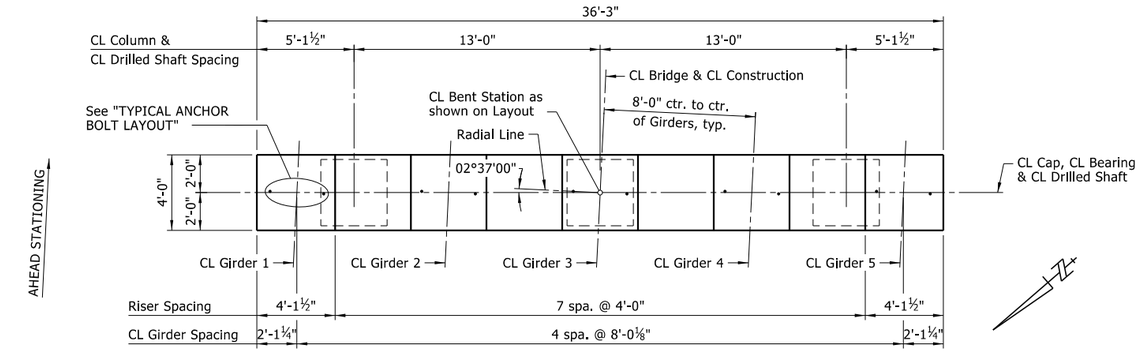

PLAN

Scale: ¼" = 1'-0"

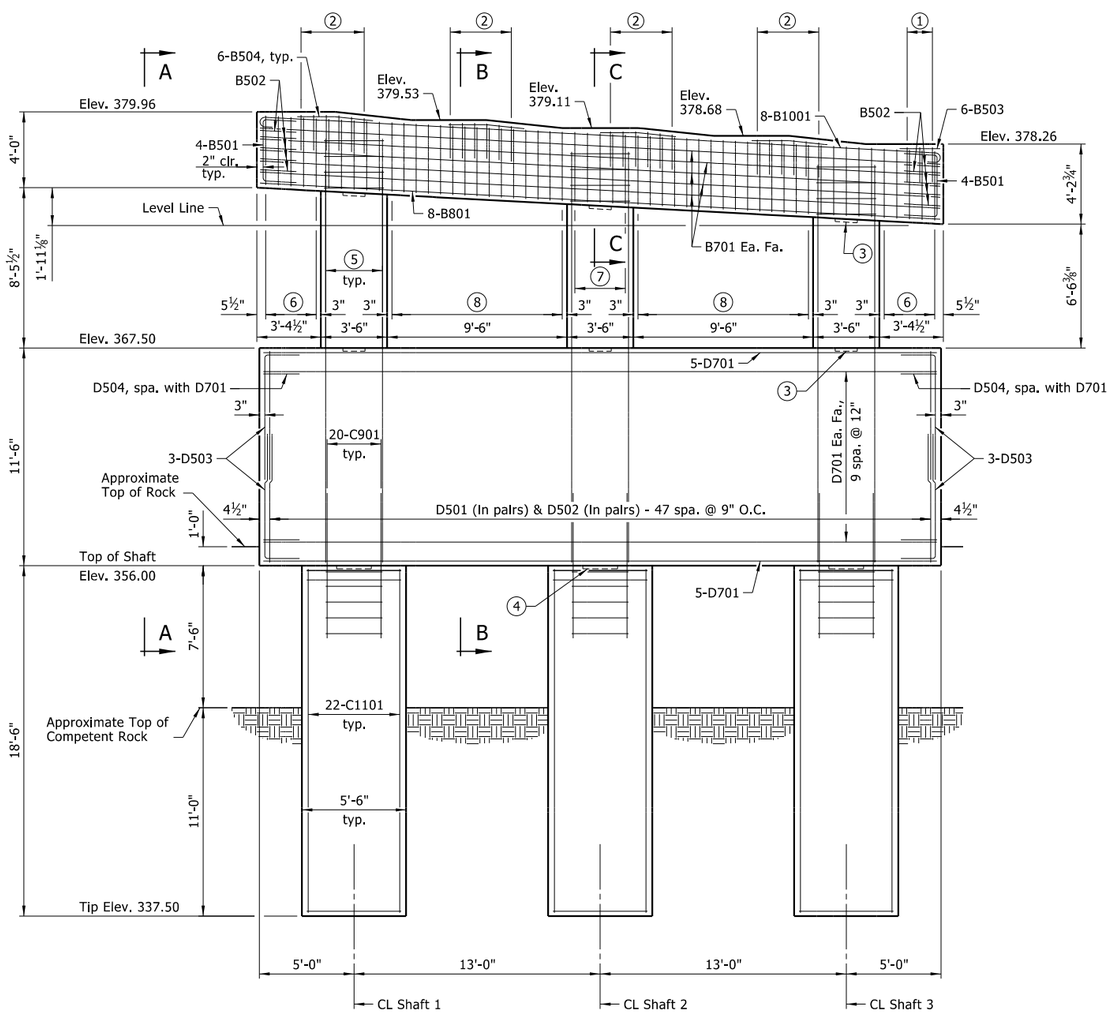

ELEVATION

Looking Ahead Station
Scale: ¼" = 1'-0"

Bearing seat elevations shall be ± ⅛" per the Standard Specifications.

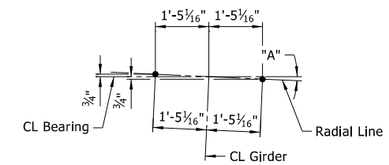

GIRDER NO.	"A"
1	02°35'16"
2	02°36'08"
3	02°37'00"
4	02°37'53"
5	02°38'46"

TYPICAL ANCHOR BOLT LAYOUT

Scale: ½" = 1'-0"
For details of Elastomeric Bearings, see Dwg. No. 67323

NOTES:
CL Bridge is on a 04°00'00" curve right.

Column and drilled shaft tie reinforcement not shown for clarity. For additional details of reinforcing in columns and drilled shafts, see Dwg. No. 67317.

For View A-A, Section B-B and Section C-C, see Dwg. No. 67316.

For additional General Notes, see Std. Dwg. No. 55006.

1. 3 - B401 spa. with Double B601 Ties
2. 6 - B401 spa. with Double B601 & B602 Ties
3. 14"x14"x2" Keyed Constr. Jt., typ.
4. 22"x22"x2" Keyed Constr. Jt., typ.
5. 20 - C902 - Column 1
   20 - C903 - Column 2
   20 - C904 - Column 3
6. Double B601 - 4 eq. spa. @ 8" max.
7. Double B602 - 4 eq. spa. @ 8" centered over column, typ.
8. Double B601 - 14 eq. spa. @ 8" max.

STATE OF ARKANSAS
LICENSED PROFESSIONAL ENGINEER
No. 17472
TRAVIS MICHAEL RAPP
7/24/2024
BRIDGE ENGINEER

SHEET 1 OF 3
DETAILS OF BENT 2
ROUTE SEC.
ARKANSAS STATE HIGHWAY COMMISSION
LITTLE ROCK, ARK.

DRAWN BY: TLW DATE: 2/2024 FILENAME: b061741_b21
CHECKED BY: TG DATE: 2/2024 SCALE: AS SHOWN
DESIGNED BY: CBM DATE: 2/2024

BRIDGE NO. 07680 DRAWING NO. 67315

DATE REVISED	DATE REVISED	FED. RD. DIST. NO.	STATE	JOB NO.	SHEET NO.	TOTAL SHEETS
		6	ARK.	061741	91	136
		07680 -		BENT 2		- 67316

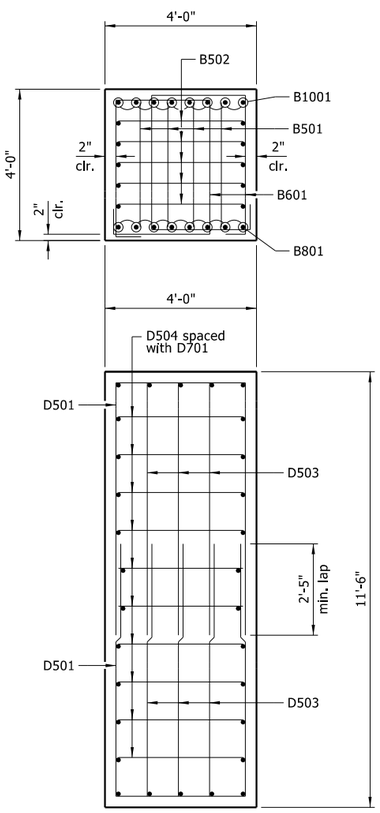

VIEW A-A

Scale: ½" = 1'-0"

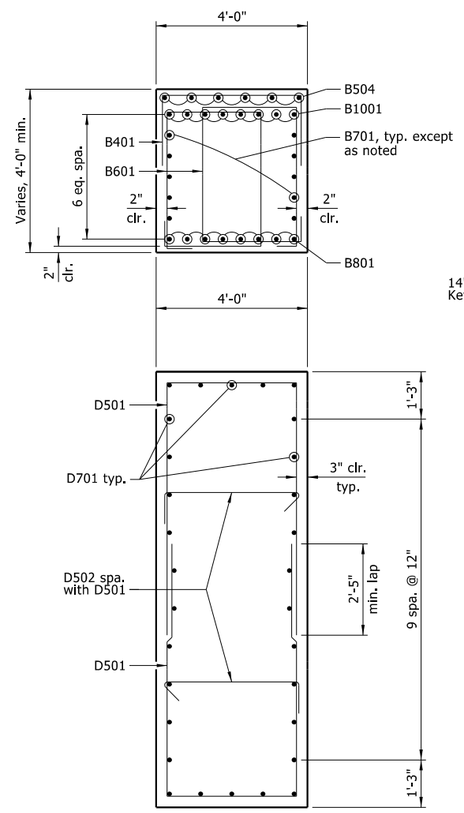

SECTION B-B

Scale: ½" = 1'-0"

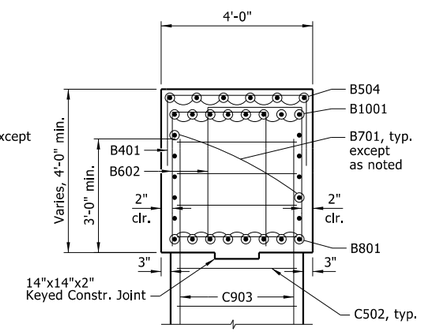

SECTION C-C

Scale: ½" = 1'-0"

NOTE:
Reinforcing not labeled is typical to other sections.

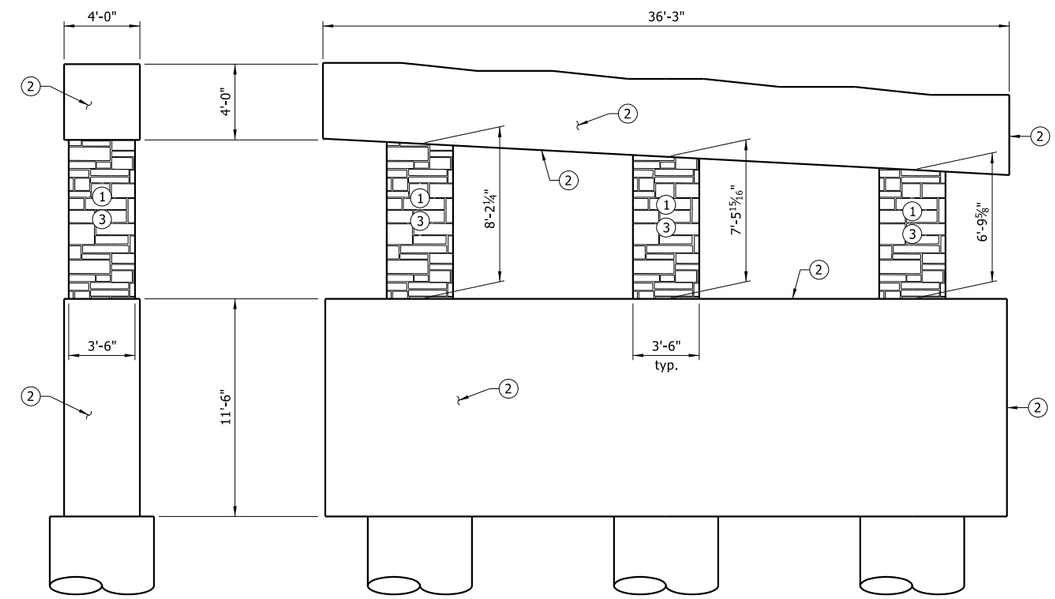

END VIEW

ELEVATION

Looking Ahead

ASHLAR STONE PATTERN

Scale: ¼" = 1'-0"

1. Class 3 Textured Coating Finish (Color = Brown, Color Chip No. 30219).
2. Class 3 Textured Coating Finish (Color = Brown, Color Chip No. 33522).
3. Ashlar Stone Pattern Form Liner. See Special Provision "ARCHITECTURAL FINISH".

STATE OF ARKANSAS
LICENSED PROFESSIONAL ENGINEER
No. 17472
TRAVIS MICHAEL RAPP
7/24/2024

BRIDGE ENGINEER

SHEET 2 OF 3
DETAILS OF BENT 2

ROUTE SEC.

ARKANSAS STATE HIGHWAY COMMISSION

LITTLE ROCK, ARK.

DRAWN BY:	TLW	DATE:	2/2024	FILENAME:	b061741_b22
CHECKED BY:	TG	DATE:	2/2024	SCALE:	AS SHOWN
DESIGNED BY:	CBM	DATE:	2/2024		

BRIDGE NO. 07680 DRAWING NO. 67316

DATE REVISED	DATE REVISED	FED. RD. DIST. NO.	STATE	JOB NO.	SHEET NO.	TOTAL SHEETS
		6	ARK.	061741	92	136
		07680 -		BENT 2		- 67317

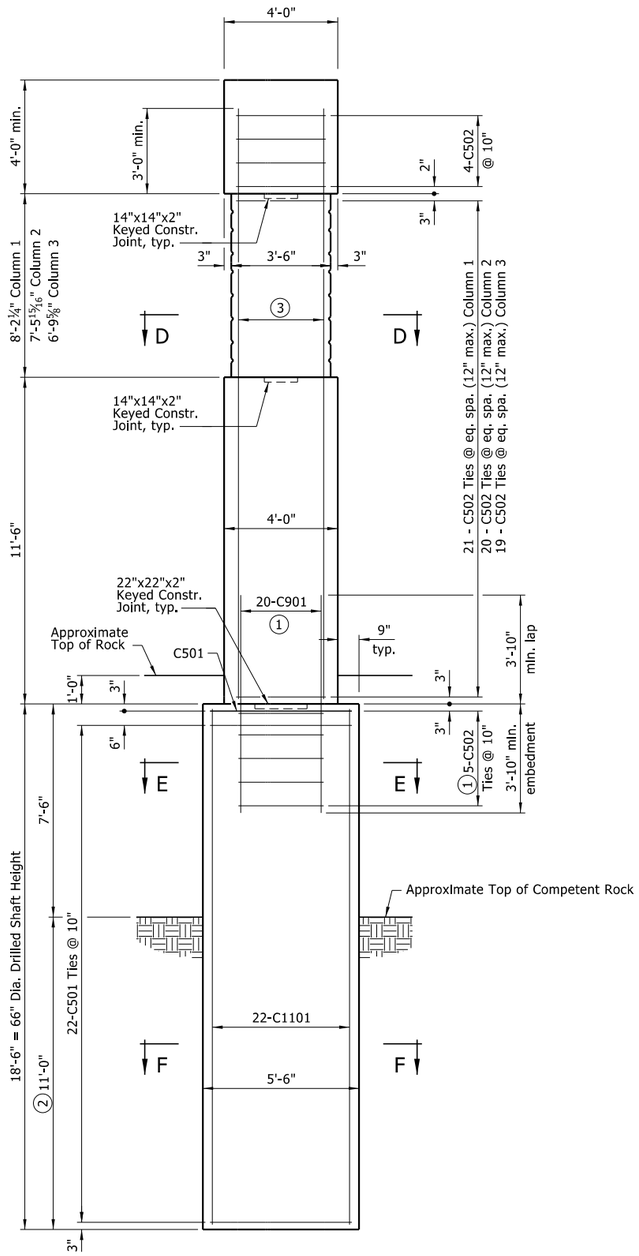

TYPICAL VIEW AT COLUMNS

Scale: ⅜" = 1'-0"

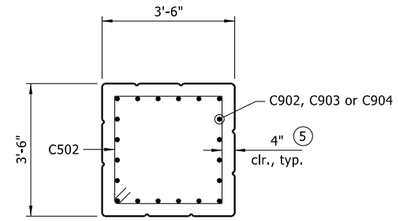

SECTION D-D

Scale: ½" = 1'-0"

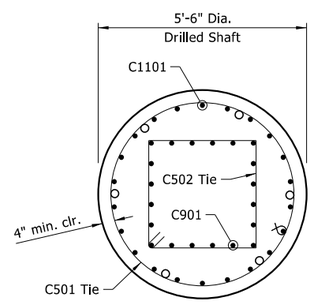

SECTION E-E

Scale: ½" = 1'-0"

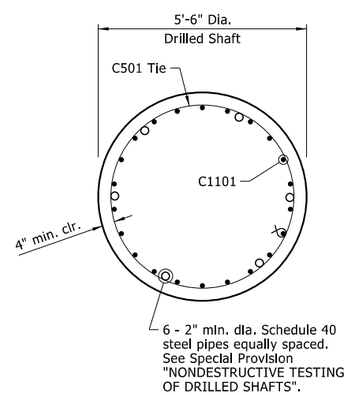

SECTION F-F

Scale: ½" = 1'-0"

BAR LIST

	MARK	NO. REQ'D.	LENGTH	"A"	"B"	P.D.
	B401	27	5'-6"	3'-8"	1'-0"	2"
	B501	8	8'-4"	3'-6"	2'-6"	2½"
	B502	10	8'-4"	3'-6"	2'-6"	2½"
	B503	6	1'-9"			Str.
	B504	24	4'-0"			2½"
	B601	80	14'-2"			4½"
	B602	30	9'-10"	2'-10"	3'-8"	4½"
	B701	10	35'-11"			Str.
	B801	8	35'-11"			Str.
	B1001	8	38'-9"			10"
④	C501	69	16'-6"			3¾"
	C502	87	12'-0"	2'-10"	2'-10"	3¾"
	C901	60	7'-10"			Str.
	C902	20	22'-8"			Str.
	C903	20	22'-0"			Str.
	C904	20	21'-3"			Str.
④	C1101	66	18'-2"			Str.
	D501	96	16'-10"	3'-6"	6'-9"	2½"
	D502	96	4'-8"			2½"
	D503	12	9'-2"			2½"
	D504	20	8'-2"	3'-4"	2'-6"	2½"
	D701	30	35'-8"			Str.

BENDING DIAGRAMS

Bar dimensions are out-to-out. Bars with an "E" suffix are to be epoxy coated.

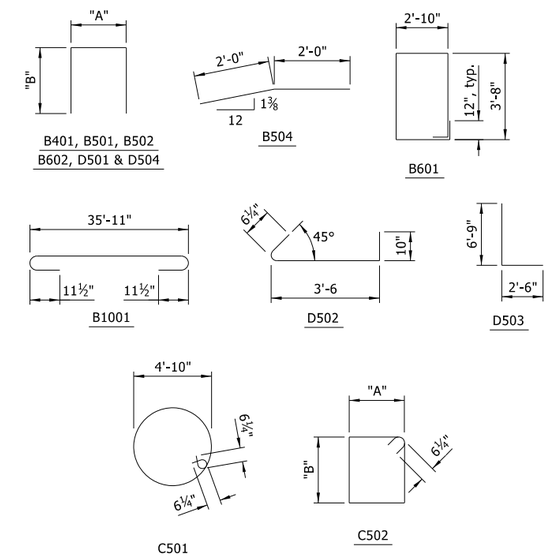

① The column reinforcing cage, consisting of bars C502 and C901, may be placed before or after concrete placement in the shaft is complete. Vibration of concrete in the top 10 feet of the shaft will be needed to ensure the consolidation of the concrete around the reinforcing steel and to insert the column reinforcing cage. The Contractor will be responsible for obtaining satisfactory results.

② Minimum penetration into competent rock.

③ 20 - C902 - Column 1
20 - C903 - Column 2
20 - C904 - Column 3

④ Non-pay Item - See Special Provision "DRILLED SHAFT FOUNDATIONS".

⑤ Form Liner shall be a maximum depth of 1½" to provide a minimum clearance of 2½".

NOTES:
For additional General Notes, see Std. Dwg. No. 55006.

Concrete in the Cap, Column and Crash Wall shall be Class S with a minimum 28 day compressive strength, f'c = 3,500 psi, and shall be poured in the dry. Concrete in the Drilled Shaft shall be Class S as modified by Special Provision "DRILLED SHAFT FOUNDATIONS". All exposed corners to be chamfered ¾" unless otherwise noted.

All reinforcing steel shall be Grade 60 (yield strength = 60,000 psi) conforming to AASHTO M 31 or M 322, Type A, with mill test reports.

Top reinforcing bars shall be properly placed to avoid interference with anchor bolts or sheet metal sleeves.

For additional information, see Layout.

Concrete and reinforcing steel placed in the drilled shaft will not be paid for directly but shall be considered subsidiary to the unit price bid for "DRILLED SHAFT (66" DIA.)". No additional payment shall be made for spacers, additional splices, or bracing needed for assembly, shipping, handling, or erecting. Drilled shafts shall conform to Special Provision "DRILLED SHAFT FOUNDATIONS" and shall be paid for at the unit price bid for "DRILLED SHAFT (66" DIA.)".

STATE OF ARKANSAS
LICENSED PROFESSIONAL ENGINEER
No. 17472
TRAVIS MICHAEL RAPP
7/24/2024
BRIDGE ENGINEER

SHEET 3 OF 3
DETAILS OF BENT 2
ROUTE SEC.
ARKANSAS STATE HIGHWAY COMMISSION
LITTLE ROCK, ARK.

DRAWN BY: TLW DATE: 2/2024 FILENAME: b061741_b23
CHECKED BY: TG DATE: 2/2024 SCALE: AS SHOWN
DESIGNED BY: CBM DATE: 2/2024

BRIDGE NO. 07680 DRAWING NO. 67317

DATE REVISED	DATE REVISED	FED. RD. DIST. NO.	STATE	JOB NO.	SHEET NO.	TOTAL SHEETS
		6	ARK.	061741	93	136
		07680 -		BENT 3		- 67318

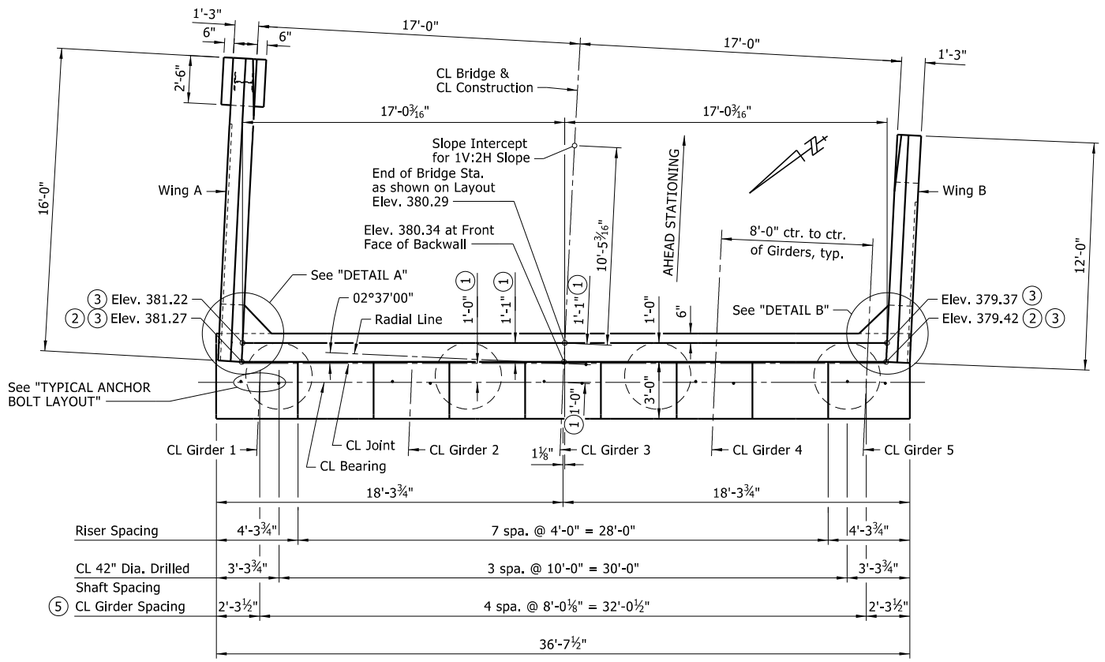

PLAN

Scale: 1/4" = 1'-0"

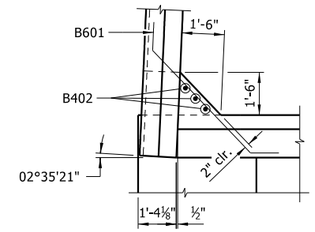

DETAIL A

Scale: 3/8" = 1'-0"

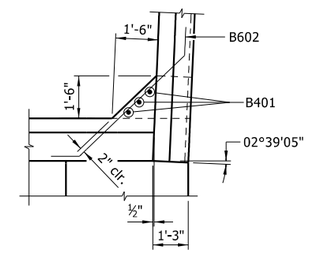

DETAIL B

Scale: 3/8" = 1'-0"

NOTES:
CL Bridge is on a 04°00'00" curve right. Wings and Rails are to be constructed on curves concentric with CL Bridge and CL Construction. Skew is measured at CL Joint.

Drilled shaft tie reinforcement not shown for clarity. For additional details of reinforcing in drilled shafts, see Dwg. No. 67322.

For Section A-A, Section B-B, View C-C, and View D-D, see Dwg. No. 67319.

1. Measured from CL Joint.
2. At Front Face of Backwall.
3. At Top of Wing.
4. For additional details of Bridge Traffic Rail Type SSTR36, see Std. Dwg. No. 55070.
5. Measured along CL Bearing.

Bearing seat elevations shall be ± 1/8" per the Standard Specifications.

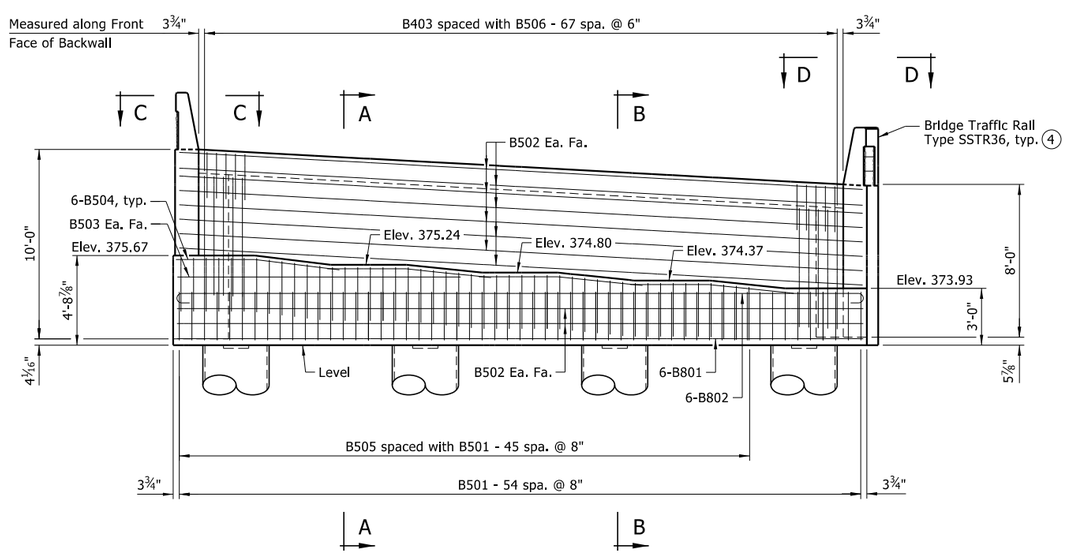

ELEVATION

Looking Ahead Station
Scale: 1/4" = 1'-0"

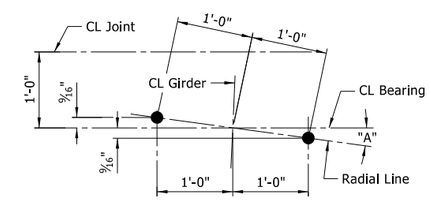

GIRDER NO.	"A"
1	02°32'53"
2	02°33'44"
3	02°34'36"
4	02°35'28"
5	02°36'21"

TYPICAL ANCHOR BOLT LAYOUT

For details of Elastomeric Bearings, see Dwg. No. 67323.
Scale: 1" = 1'-0"

STATE OF ARKANSAS
LICENSED PROFESSIONAL ENGINEER
No. 17472
TRAVIS MICHAEL RAPP
7/24/2024
BRIDGE ENGINEER

SHEET 1 OF 5
DETAILS OF BENT 3
ROUTE SEC.
ARKANSAS STATE HIGHWAY COMMISSION
LITTLE ROCK, ARK.

DRAWN BY: TLW DATE: 2/2024 FILENAME: b061741_b31
CHECKED BY: TG DATE: 2/2024 SCALE: AS SHOWN
DESIGNED BY: HRA DATE: 2/2024

BRIDGE NO. 07680 DRAWING NO. 67318

DATE REVISED	DATE REVISED	FED. RD. DIST. NO.	STATE	JOB NO.	SHEET NO.	TOTAL SHEETS
		6	ARK.	061741	94	136
		07680 -		BENT 3		- 67319

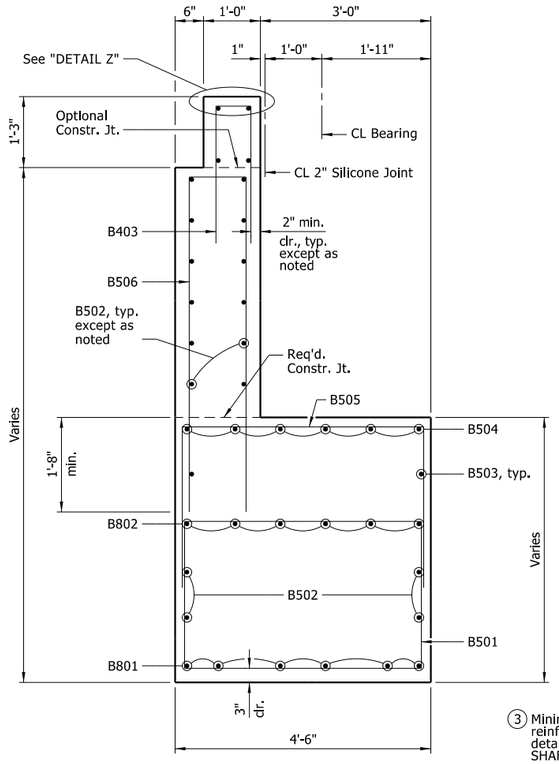

SECTION A-A

Scale: ¾" = 1'-0"

③ Minimum embedment of drilled shaft reinforcing into cap. For additional details, see "ELEVATION OF DRILLED SHAFTS" on Dwg. No. 67322.

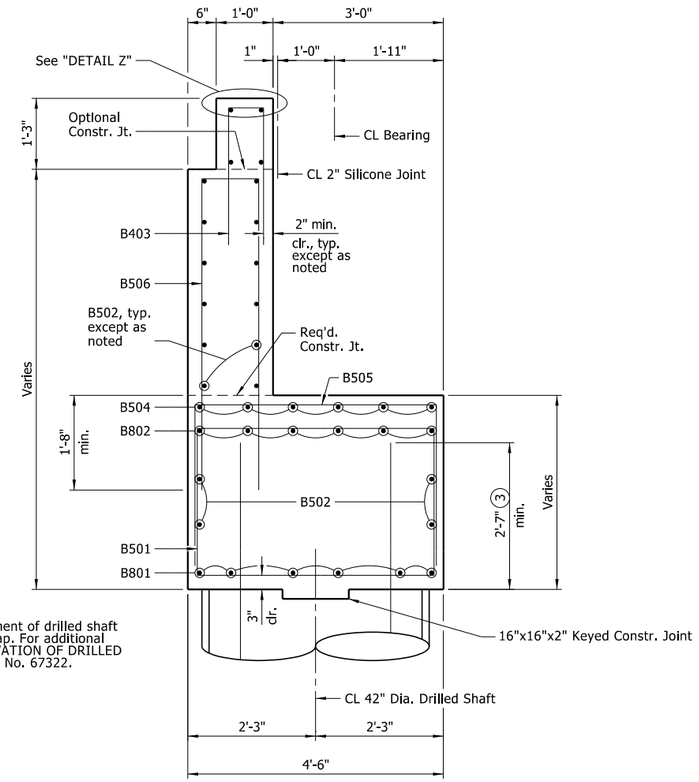

SECTION B-B

Scale: ¾" = 1'-0"

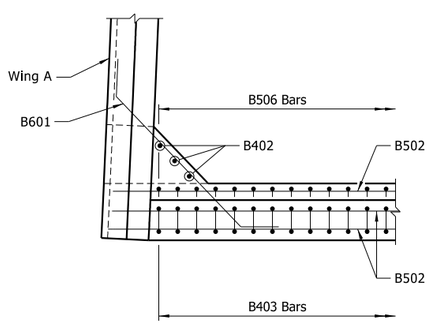

VIEW C-C

Scale: ½" = 1'-0"

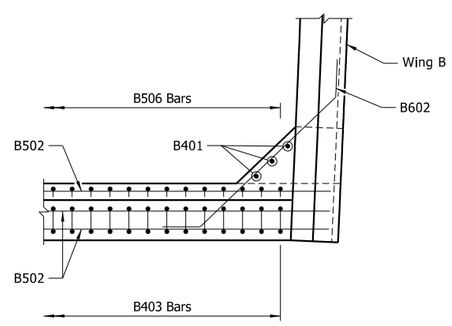

VIEW D-D

Scale: ½" = 1'-0"

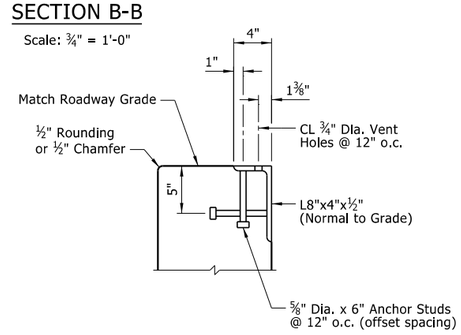

DETAIL Z

No Scale

NOTES:
Transverse spacing between vertical anchor studs and vent holes shall be 6".

Concrete shall be hand packed under the joint armor.

The profile of the backwall angle shall be established based on the vertical curve in conjunction with the skew.

For additional joint details, see Std. Dwg. No. 55008.

Special care shall be taken to properly and thoroughly consolidate the concrete in the vicinity of the expansion joint device in the backwall, see Subsection 802.09(a)(3).

BAR LIST

	MARK	NO. REQ'D.	LENGTH	P.D.
	B401	3	6'-4"	Str.
	B402	3	8'-3"	Str.
	B403	68	5'-4"	2"
	B501	55	14'-0"	2½"
	B502	20	36'-3"	Str.
	B503	2	14'-10"	Str.
	B504	24	8'-6"	2½"
	B505	46	9'-8"	2½"
	B506	68	13'-4"	2½"
	B601	8	6'-10"	4½"
	B602	8	7'-0"	4½"
	B801	6	36'-3"	Str.
	B802	6	38'-1"	6"
②	C501	174	10'-3"	3¾"
②	C901	14	11'-2"	Str.
②	C902	14	17'-9"	Str.
②	C903	14	24'-3"	Str.
②	C904	14	30'-10"	Str.
	F601	5	2'-2"	Str.
①	R401E	56	6'-4"	2½"
①	R402E	8	5'-6"	Str.
①	R408E	8	11'-8"	Str.
①	R409E	8	15'-8"	Str.
①	W401E	56	3'-11"	3¾"
	W402	5	12'-7"	2"
	W403	9	12'-7"	2"
	W501	6	7'-8"	Str.
	W502 To W508	2 Ea.	7'-3" To 2'-5"	Str.
	W509	8	2'-2"	Str.
	W510	6	9'-8"	Str.
	W511 To W521	2 Ea.	9'-3" To 2'-5"	Str.
	W601	8	4'-4"	4½"
	W701	12	11'-8"	Str.
	W702 To W710	2 Ea.	8'-9" To 3'-6"	Str.
	W711	2	12'-9"	5¼"
	W712	12	15'-8"	Str.
	W713 To W725	2 Ea.	12'-11" To 3'-8"	Str.
	W726	2	17'-0"	5¼"

BENDING DIAGRAMS

Bar dimensions are out-to-out. Bars with an "E" suffix are to be epoxy coated.

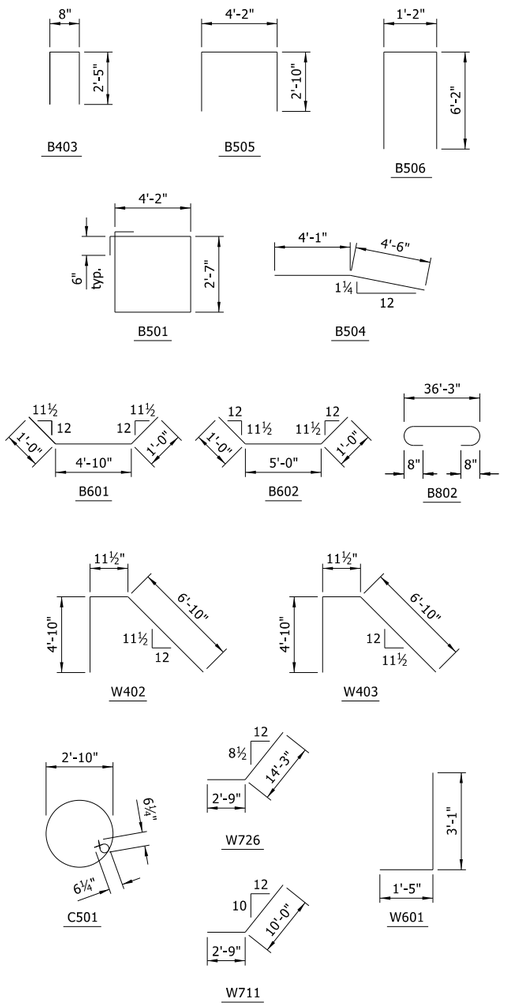

① For additional details of Bridge Traffic Rail Type SSTR36, see Std. Dwg. No. 55070 and Dwg. No. 67328 for "TABLE OF VARIABLES".

② Non-pay item - See Special Provision "DRILLED SHAFT FOUNDATIONS". For additional details of Drilled Shaft, see Dwg. No. 67322.

STATE OF ARKANSAS
LICENSED PROFESSIONAL ENGINEER
No. 17472
TRAVIS MICHAEL RAPP
7/24/2024

BRIDGE ENGINEER

SHEET 2 OF 5
DETAILS OF BENT 3

ROUTE SEC.

ARKANSAS STATE HIGHWAY COMMISSION
LITTLE ROCK, ARK.

DRAWN BY: TLW DATE: 2/2024 FILENAME: b061741_b32
CHECKED BY: TG DATE: 2/2024 SCALE: AS SHOWN
DESIGNED BY: HRA DATE: 2/2024

BRIDGE NO. 07680 DRAWING NO. 67319

DATE REVISED	DATE REVISED	FED. RD. DIST. NO.	STATE	JOB NO.	SHEET NO.	TOTAL SHEETS
		6	ARK.	061741	95	136
		07680 -		BENT 3		- 67320

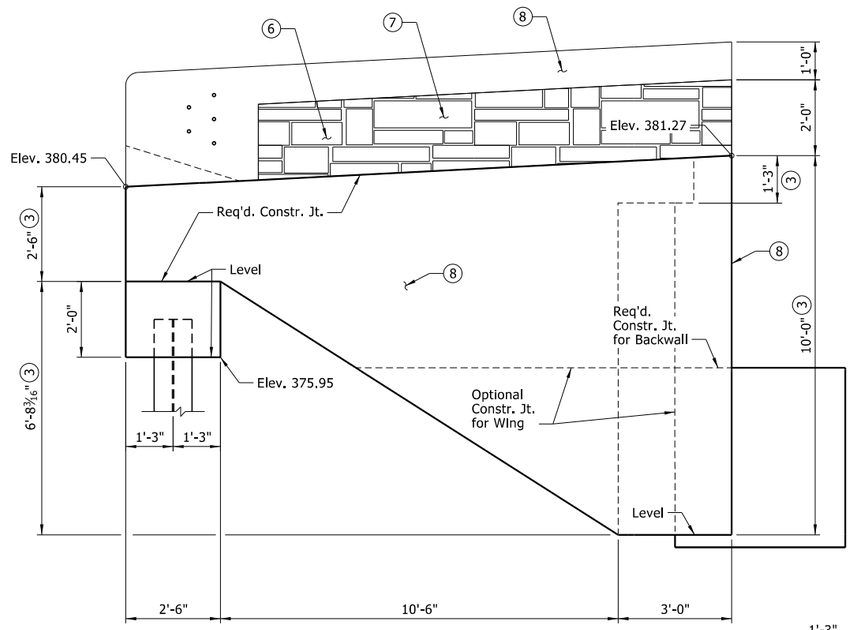

VIEW H-H

Scale: ½" = 1'-0"

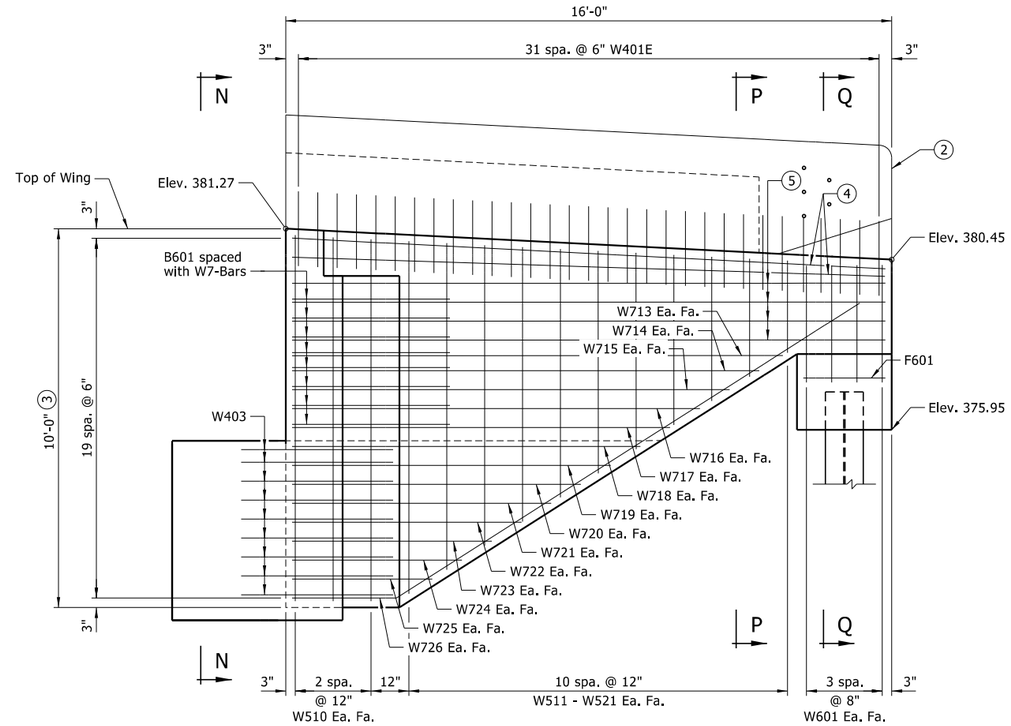

VIEW G-G

Scale: ½" = 1'-0"

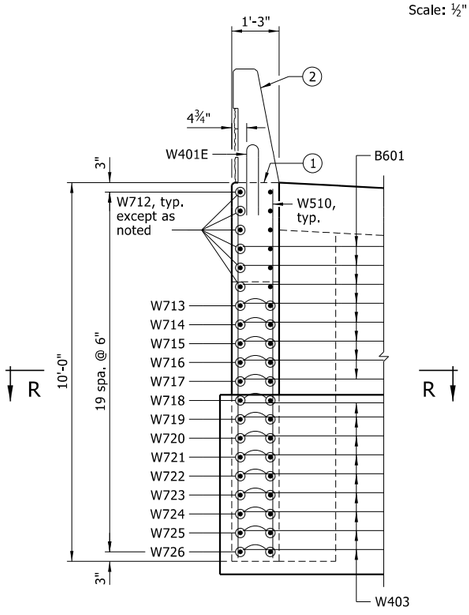

VIEW N-N

Scale: ½" = 1'-0"

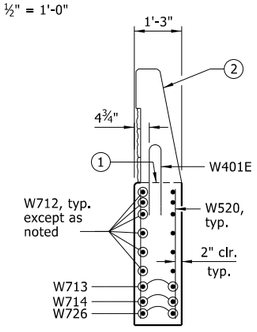

SECTION P-P

Scale: ½" = 1'-0"

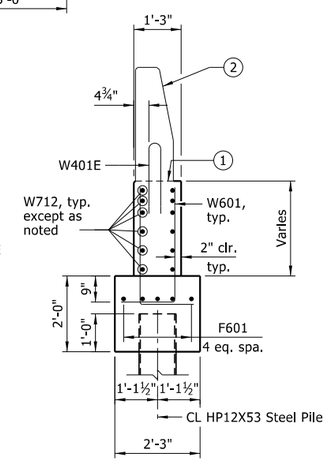

SECTION Q-Q

Scale: ½" = 1'-0"

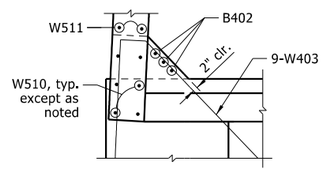

SECTION R-R

Scale: ⅜" = 1'-0"

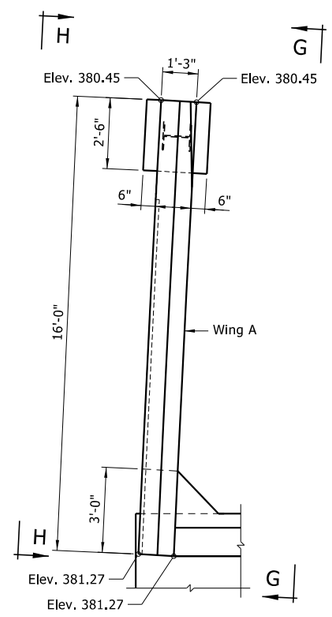

PLAN OF WING

Scale: ⅜" = 1'-0"

1. Required construction joint shall be level.
2. For additional details of Bridge Traffic Rail Type SSTR36, see Std. Dwg. No. 55070 and Dwg. No. 67328 for "TABLE OF VARIABLES".
3. Measured along inside face of wing.
4. W712 Ea. Fa. (Place Parallel to Grade)
5. W712 Ea. Fa.
6. Ashlar Stone Pattern Form Liner. See Special Provision "ARCHITECTURAL FINISH".
7. Class 3 Textured Coating Finish (Color = Brown, Color Chip No. 30219).
8. Class 3 Textured Coating Finish (Color = Brown, Color Chip No. 33522).

STATE OF ARKANSAS
LICENSED PROFESSIONAL ENGINEER
No. 17472
TRAVIS MICHAEL RAPP
7/24/2024
BRIDGE ENGINEER

SHEET 3 OF 5
DETAILS OF BENT 3
ROUTE SEC.
ARKANSAS STATE HIGHWAY COMMISSION
LITTLE ROCK, ARK.

DRAWN BY:	TLW	DATE:	2/2024	FILENAME:	b061741_b33
CHECKED BY:	TG	DATE:	2/2024	SCALE:	AS SHOWN
DESIGNED BY:	HRA	DATE:	2/2024		

BRIDGE NO. 07680 DRAWING NO. 67320

DATE REVISED	DATE REVISED	FED. RD. DIST. NO.	STATE	JOB NO.	SHEET NO.	TOTAL SHEETS
		6	ARK.	061741	96	136
		07680 -		BENT 3		- 67321

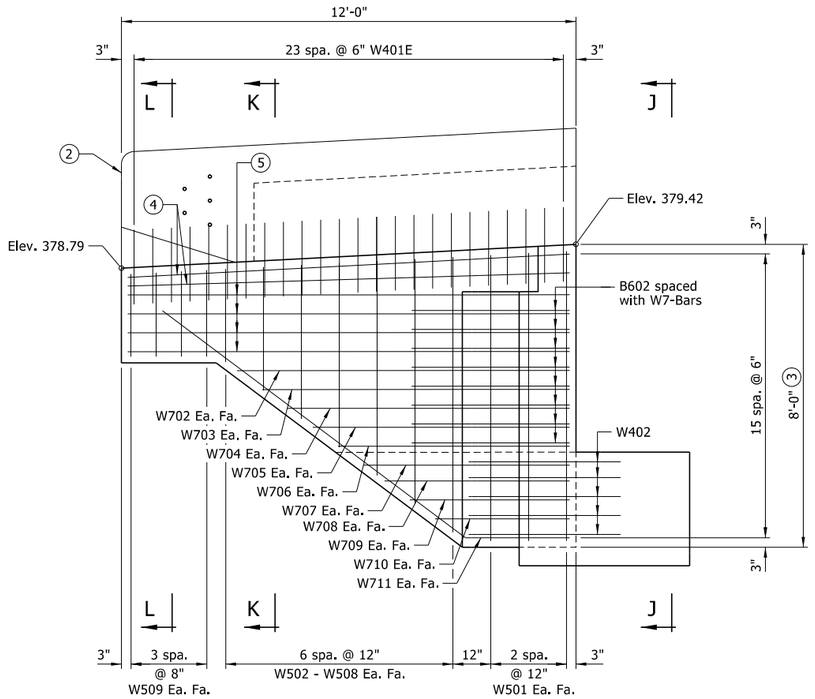

VIEW E-E

Scale: ½" = 1'-0"

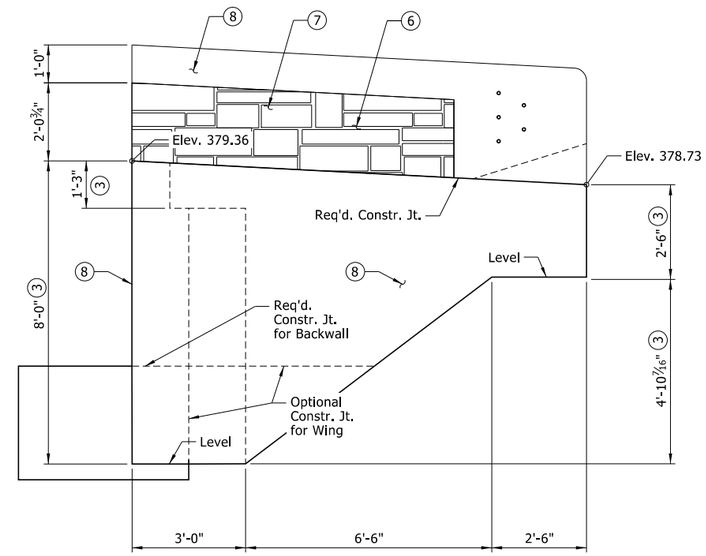

VIEW F-F

Scale: ½" = 1'-0"

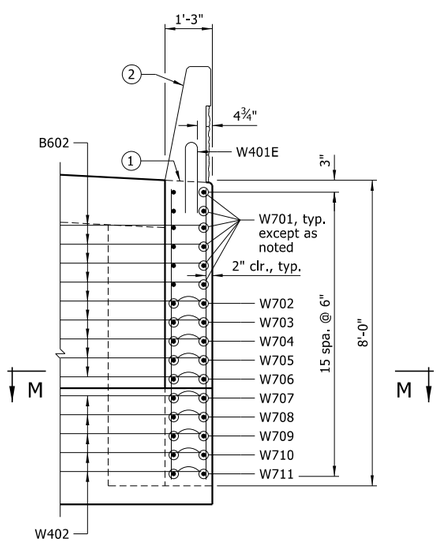

VIEW J-J

Scale: ½" = 1'-0"

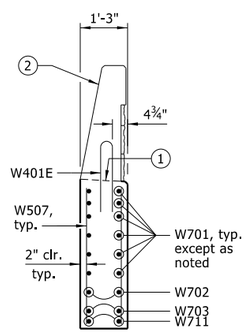

SECTION K-K

Scale: ½" = 1'-0"

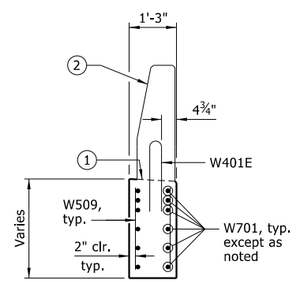

SECTION L-L

Scale: ½" = 1'-0"

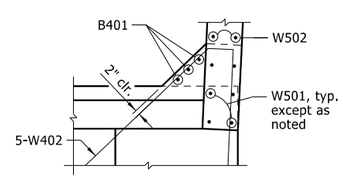

SECTION M-M

Scale: ⅜" = 1'-0"

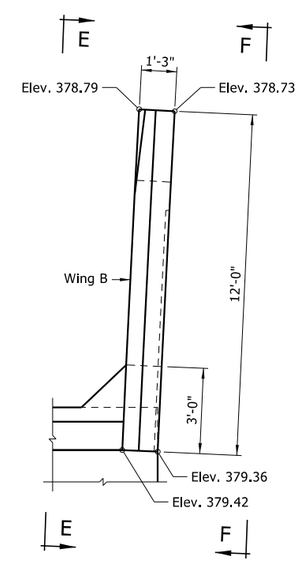

PLAN OF WING

Scale: ⅜" = 1'-0"

1. Required construction joint shall match roadway slope.
2. For additional details of Bridge Traffic Rail Type SSTR36, see Std. Dwg. No. 55070 and Dwg. No. 67328 for "TABLE OF VARIABLES".
3. Measured along inside face of wing.
4. W701 Ea. Fa. (Place Parallel to Grade)
5. W701 Ea. Fa.
6. Ashlar Stone Pattern Form Liner. See Special Provision "ARCHITECTURAL FINISH".
7. Class 3 Textured Coating Finish (Color = Brown, Color Chip No. 30219).
8. Class 3 Textured Coating Finish (Color = Brown, Color Chip No. 33522).

STATE OF ARKANSAS LICENSED PROFESSIONAL ENGINEER No. 17472 TRAVIS MICHAEL RAPP

7/24/2024

BRIDGE ENGINEER

SHEET 4 OF 5

DETAILS OF BENT 3

ROUTE SEC.

ARKANSAS STATE HIGHWAY COMMISSION

LITTLE ROCK, ARK.

DRAWN BY:	TLW	DATE:	2/2024	FILENAME:	b061741_b34
CHECKED BY:	TG	DATE:	2/2024	SCALE:	AS SHOWN
DESIGNED BY:	HRA	DATE:	2/2024		

BRIDGE NO. 07680 DRAWING NO. 67321

DATE REVISED	DATE REVISED	FED. RD. DIST. NO.	STATE	JOB NO.	SHEET NO.	TOTAL SHEETS
		6	ARK.	061741	97	136
		07680 -		BENT 3		- 67322

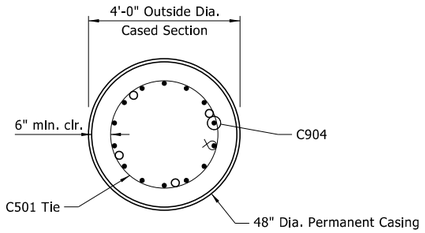

SECTION S-S

Scale: ½" = 1'-0"

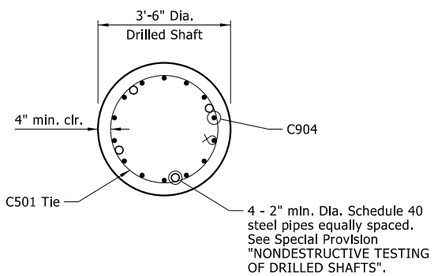

SECTION T-T

Scale: ½" = 1'-0"

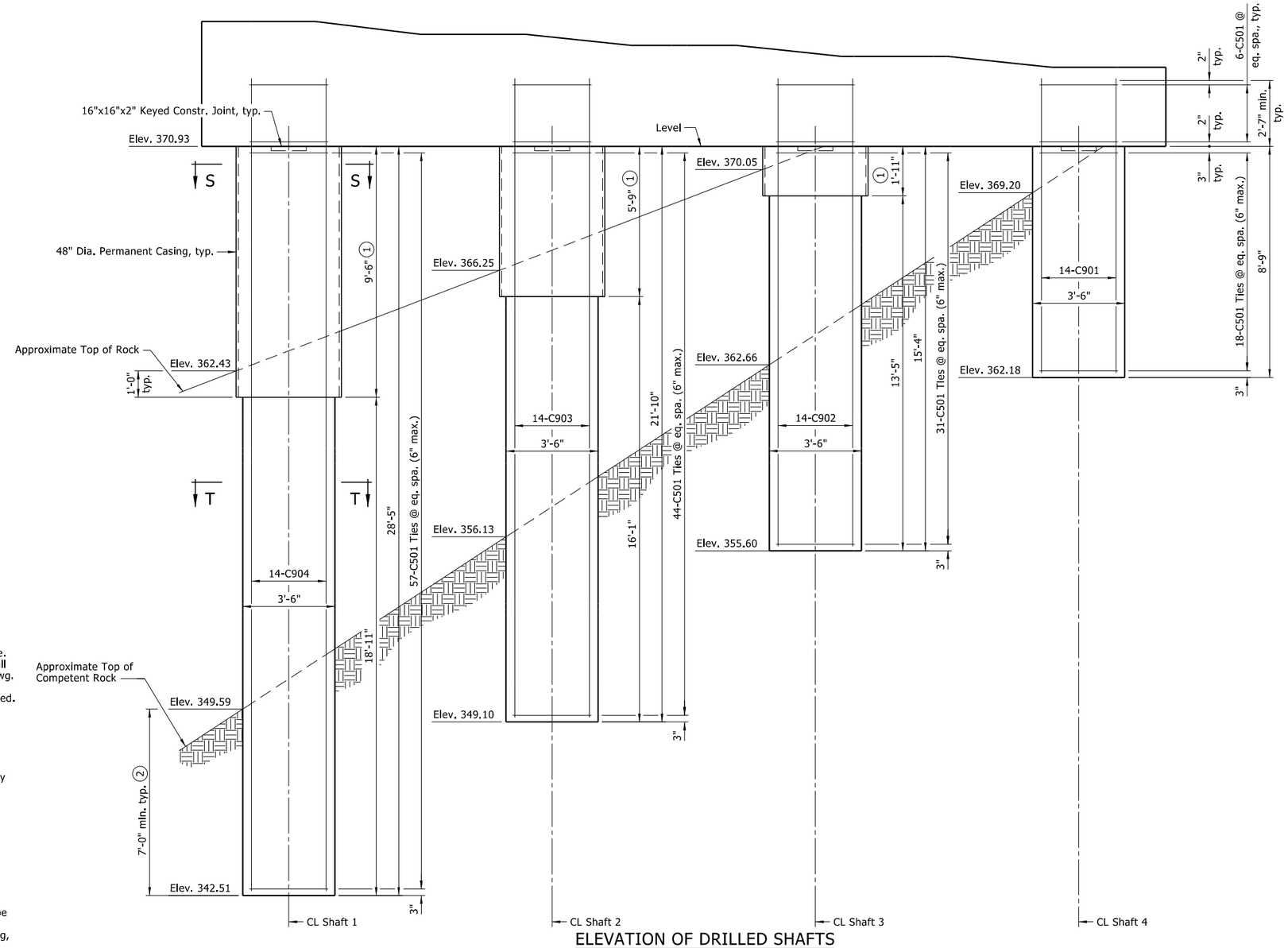

ELEVATION OF DRILLED SHAFTS

Looking Ahead Station
No Scale

NOTES:
Backwall above the required construction joint shall not be poured until the girders are in place. Backwall may be placed prior to placing the adjacent concrete deck only if the optional backwall construction joint is used. See "EXPANSION DEVICE INSTALLATION AT END BENTS" on Std. Dwg. No. 55008 for additional information. No heavy construction equipment or backfilling shall be allowed directly behind the backwall until the concrete for the adjacent span has been completed.

Finish top of backwall to match the bridge deck.

Structural Steel in end bents shall be ASTM A709, Gr. 50 and shall be paid for as "STRUCTURAL STEEL IN PLATE GIRDER SPANS (A709, GR. 50)".

Class 2 Protective Surface Treatment shall be applied to the top of backwall and to the roadway face and top of the concrete bridge traffic rails.

Concrete in the drilled shaft shall be Class S as modified by Special Provision "DRILLED SHAFT FOUNDATIONS".

All reinforcing steel shall be Grade 60 (yield strength = 60,000 psi) conforming to AASHTO M 31 or M 322, Type A, with mill test reports.

Top reinforcing bars shall be properly placed to avoid interference with anchor bolts or sheet metal sleeves.

Concrete and reinforcing steel placed in the drilled shaft will not be paid for directly but shall be considered subsidiary to the unit price bid for "DRILLED SHAFT (42" DIA.)". No additional payment shall be made for spacers, additional splices, or bracing needed for assembly, shipping, handling, or erecting. Drilled shafts shall conform to Special Provision "DRILLED SHAFT FOUNDATIONS" and shall be paid for at the unit price bid for "DRILLED SHAFT (42" DIA.)".

For additional General Notes, see Std. Dwg. No. 55006.

(1) Length of Permanent Casing shown is approximate. The 1 foot casing embedment into rock is approximate. The Contractor shall embed casing into rock to establish an adequate seal. Actual lengths of Permanent Casing are to be determined in the field. See Special Provision "DRILLED SHAFT FOUNDATIONS". Permanent casing shall not extend below top of competent rock without approval from the Engineer.

(2) Minimum penetration into competent rock.

STATE OF ARKANSAS
LICENSED PROFESSIONAL ENGINEER
No. 17472
TRAVIS MICHAEL RAPP
7/24/2024
BRIDGE ENGINEER

SHEET 5 OF 5
DETAILS OF BENT 3
ROUTE SEC.
ARKANSAS STATE HIGHWAY COMMISSION
LITTLE ROCK, ARK.

DRAWN BY:	TLW	DATE:	2/2024	FILENAME:	b061741_b35
CHECKED BY:	TG	DATE:	2/2024	SCALE:	AS SHOWN
DESIGNED BY:	HRA	DATE:	2/2024		

BRIDGE NO. 07680 DRAWING NO. 67322

DATE REVISED	DATE REVISED	FED. RD. DIST. NO.	STATE	JOB NO.	SHEET NO.	TOTAL SHEETS
		6	ARK.	061741	98	136
		07680 -	BEARING DETAILS		- 67323	

TABLE OF FABRICATOR VARIABLES

LOCATION							ELASTOMERIC PAD							EXTERNAL LOAD PLATE									ANCHOR BOLT				
BENT NO(S).	GIRDER NO.	BEARING TYPE	NO. OF BEARINGS EACH BENT	① MAXIMUM DESIGN LOAD (KIPS)	G	H	A	B	N	t_i	t_e	NO. & THICKNESS OF STEEL LAMINAE	T	C	D	E	F	J	K	M	T_a	T_b	ANCHOR BOLT (Dia. x L)	ANCHOR BOLT GRADE	PIPE SLEEVE SIZE (Dia. x L)	SHEET METAL SLEEVE SIZE (Dia. x L)	STEEL WASHER SIZE (O.D.)
1	1-5	Exp.	5	130	7¾"	4 7/16"	18"	8"	3	½"	¼"	4 @ 12 Gauge	2 7/16"	9"	30½"	5¼"	3⅛"	-	½"	12"	2.02"	1.98"	2" x 28"	55	2½" x 4¾"	4" x 9"	3¾"
2	1-5	Fix.	5	382	7¾"	4 7/16"	24"	10"	3	½"	¼"	4 @ 12 Gauge	2 7/16"	11"	43¼"	3⅛"	3⅛"	1¾"	½"	17 1/16"	1.87"	2.13"	2" x 28"	55	2½" x 4¾"	4" x 10"	3¾"
3	1-5	Exp.	5	130	7¾"	4 7/16"	18"	8"	3	½"	¼"	4 @ 12 Gauge	2 7/16"	9"	30½"	5¼"	3⅛"	-	½"	12"	1.77"	2.23"	2" x 28"	55	2½" x 4¾"	4" x 9"	3¾"

① Maximum Design Load = Service 1 Limit State

Prior to erection of the girders, the Contractor shall verify the orientation of the bearings with respect to T_a and T_b.

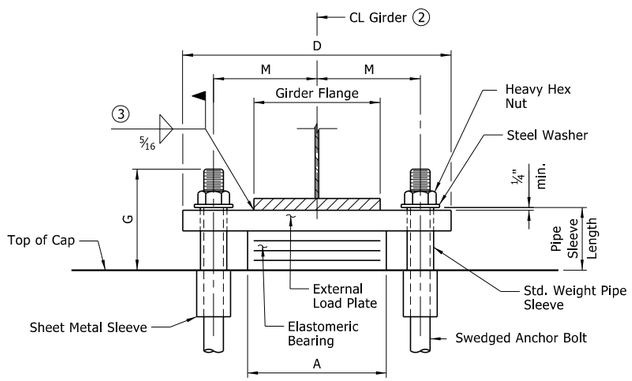

FRONT VIEW AT BENTS 1 & 3

② Centerline of the elastomeric pad shall be aligned with centerline of the girder.

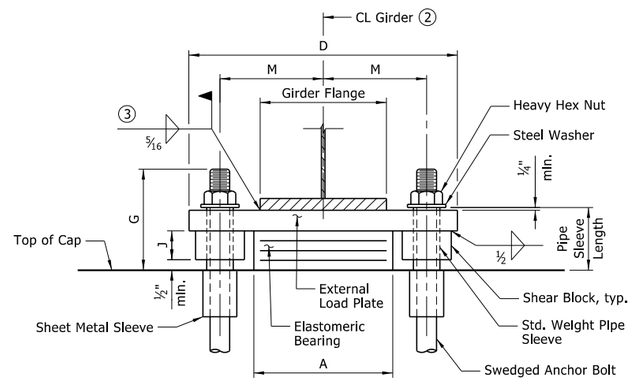

FRONT VIEW AT BENT 2

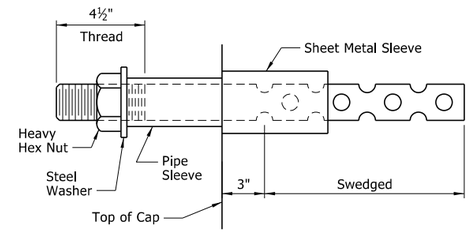

ANCHOR BOLT DETAIL

Anchor bolts may be cast in place or drilled and grouted into place. If anchor bolts are to be cast in place, the galvanized sheet metal sleeves will not be required.

If anchor bolts are to be drilled and grouted in place, the galvanized sheet metal sleeves shall be cast in place as shown. Sleeves shall be dry packed with styrofoam, urethane foam or approved equal prior to pouring of concrete. After pouring of the cap and prior to erection of structural steel, the dry pack shall be removed and holes for the anchor bolts shall be accurately drilled into the concrete. Bolts placed in drilled holes shall be accurately set and fixed using a QPL approved epoxy or non-shrink grout that completely fills the holes. Galvanized sheet metal sleeves shall meet the requirements of ASTM 653, CS Type B or approved equal, be of minimum 16 gage thickness, and be galvanized according to ASTM B695, Class 50. Sheet metal sleeves will not be paid for directly, but will be considered subsidiary to the item "STRUCTURAL STEEL IN PLATE GIRDER SPANS (A709, GR. 50)".

NOTES:
Elastomeric bearings shall conform to Section 808 of the Standard Specifications and shall be paid for at the unit price bid for "ELASTOMERIC BEARINGS".

External load plates and shear blocks shall conform to ASTM A709, Grade 50. Pipe sleeves shall be ASTM A500, Grade B, and shall be galvanized to conform to AASHTO M 232, Class C or ASTM B695, Class 50.

External load plates and shear blocks shall be completely fabricated (including bevel, bolt holes and all shop welding) and shall be cleaned before vulcanizing to the elastomeric bearing. The surface in contact with the elastomeric bearing shall be cleaned in accordance with Subsection 808.03. Other surfaces shall be blast cleaned in accordance with Subsection 807.84(b) for painted steel and painted in accordance with Subsection 807.75. Mask areas of field welding. The color of paint shall conform to Federal Standard 595B, Color Chip No. 20108 (semi-gloss), Dark Brown. Painting will not be paid for directly, but shall be considered subsidiary to "ELASTOMERIC BEARINGS."

Anchor bolts, washers and nuts shall conform to Subsection 807.07. The anchor bolt grade of steel shall be as specified in the "TABLE OF FABRICATOR VARIABLES". Indentations shall be circular with rounded bottoms and staggered as shown in the details.

Pipe sleeves, anchor bolts, washers and nuts shall be paid for at the unit price bid for "STRUCTURAL STEEL IN PLATE GIRDER SPANS (A709, GR. 50)". External load plates and shear blocks will not be measured or paid for separately, but will be considered subsidiary to "ELASTOMERIC BEARINGS".

Bearings shall be seated in accordance with Subsection 808.08. This work and materials are considered subsidiary to the item "ELASTOMERIC BEARINGS" and will not be paid for directly.

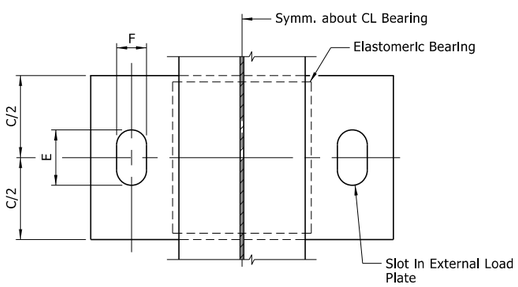

PLAN VIEW AT BENTS 1 & 3

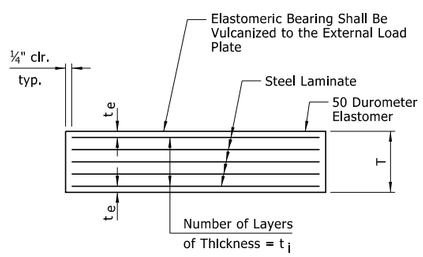

ELASTOMERIC BEARING

t_e = Thickness of Elastomer Cover on Top and Bottom of Pad
t_i = Thickness of Elastomer Between Steel Laminae
N = Number of Elastomer Layers of Thickness t_i

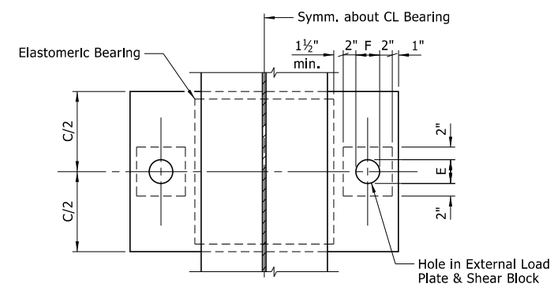

PLAN VIEW AT BENT 2

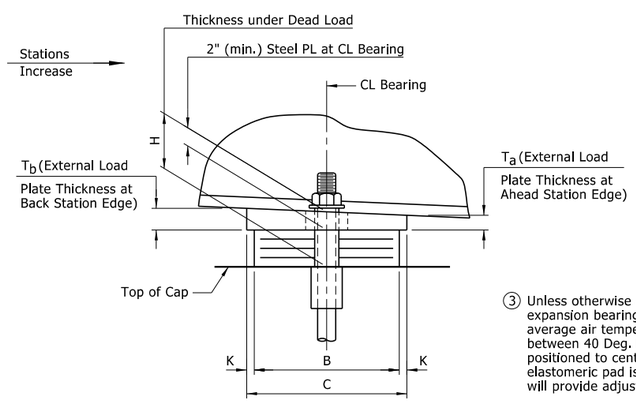

SIDE VIEW AT BENTS 1 & 3

NOTE:
The direction of bevel of the external load plate may not be accurately depicted with respect to T_a and T_b values shown in the "TABLE OF FABRICATOR VARIABLES".

③ Unless otherwise approved by the Engineer, welding of the external load plate at expansion bearings to the girder will be allowed only when: 1) the approximate average air temperature during the 24 hour period immediately preceding welding is between 40 Deg. F and 80 Deg. F; and 2) the slots in the external load plate are positioned to center on the anchor bolts; and 3) no horizontal deformation of the elastomeric pad is evident. If welding at other temperatures is required, the Engineer will provide adjustment data.

Care shall be taken to ensure that the external load plate is in full and complete contact with the girder flange before welding begins.

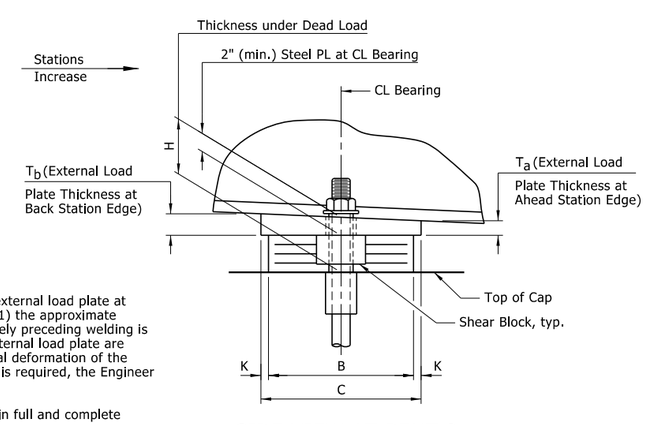

SIDE VIEW AT BENT 2

STATE OF ARKANSAS
LICENSED PROFESSIONAL ENGINEER
No. 17472
TRAVIS MICHAEL RAPP
7/24/2024
BRIDGE ENGINEER

DETAILS OF ELASTOMERIC BEARINGS
ROUTE SEC.
ARKANSAS STATE HIGHWAY COMMISSION
LITTLE ROCK, ARK.

DRAWN BY:	JCR	DATE:	2/2024	FILENAME:	b061741_e1
CHECKED BY:	HRA	DATE:	2/2024	SCALE:	NONE
DESIGNED BY:	CBM	DATE:	2/2024		

BRIDGE NO. 07680 DRAWING NO. 67323

DATE REVISED	DATE REVISED	FED. RD. DIST. NO.	STATE	JOB NO.	SHEET NO.	TOTAL SHEETS
		6	ARK.	061741	99	136
		07680 -		240 FT. UNIT		- 67324

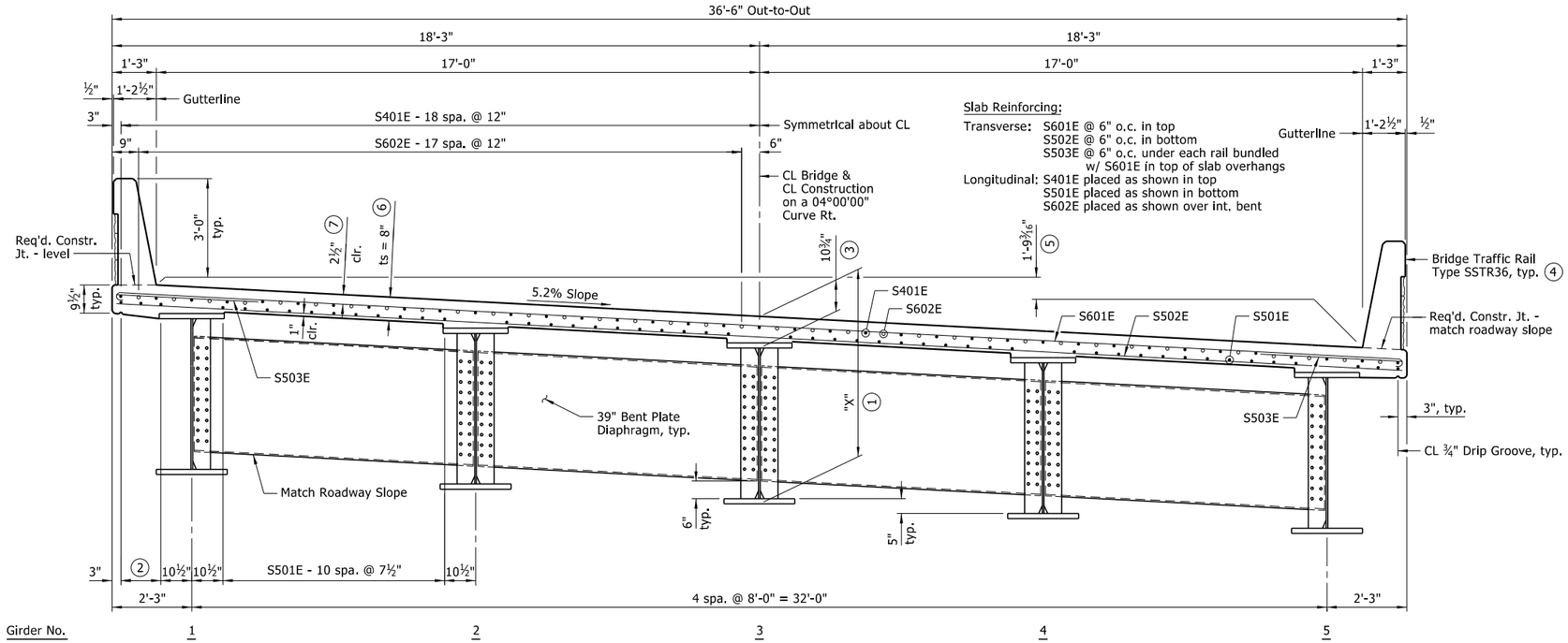

TYPICAL ROADWAY SECTION

Looking Ahead Station
Scale: ½" = 1'-0"

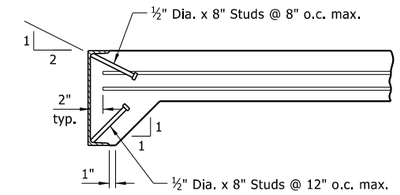

NOTE:
As an alternate to ⅝" Dia. studs, ½" Dia. x 8" studs spaced as shown may be used. Use weight of ⅝" Dia. stud as basis of measurement of structural steel in anchors.

DETAILS OF ALTERNATE ANCHORS & PLACEMENT OF LONGITUDINAL REINFORCEMENT

No Scale

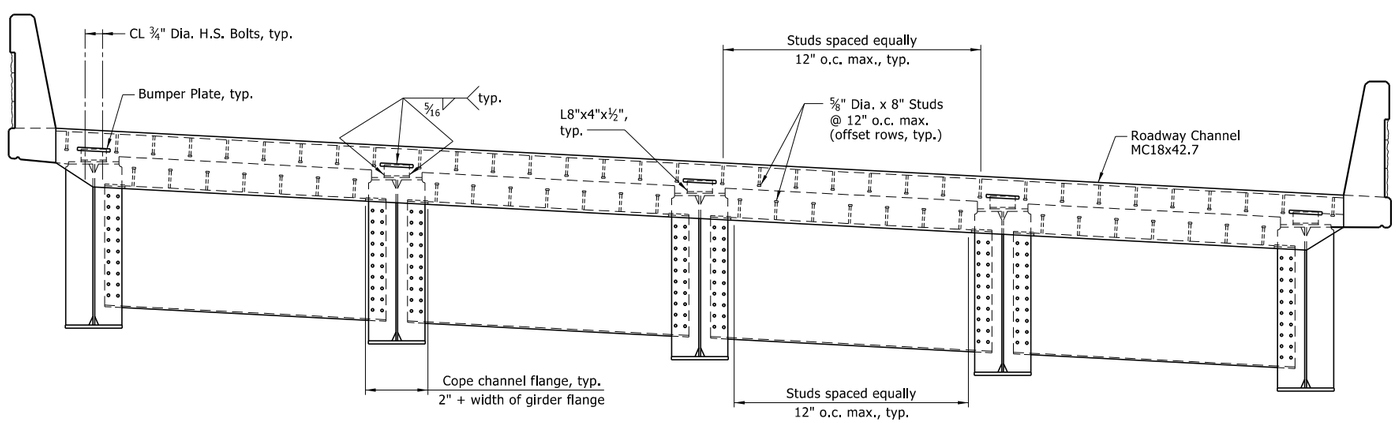

EXPANSION DEVICE:
Roadway Channel - MC18x42.7
Conn. Angle - L8"x4"x½"
Detail device ⅛" high and provide ¼" shims using 2 - 1/16" plates and 1 - ⅛" plate.

TYPICAL SECTION THROUGH JOINT

Looking Ahead Station - Bent 1
Bent 3 Similar
Scale: ½" = 1'-0"

NOTES:
Bar positions or clearances from the forms shall be maintained by means of stays, ties, hangers or other approved devices per Subsection 804.06. Placement of slab bolsters or hi-chairs with full-length lower runners directly on removable deck will not be allowed.

For Standard General Notes and Details, see Std. Dwg. Nos. 55006 and 55007.

Class 2 Protective Surface Treatment shall be applied to the roadway surface and to the roadway face and top of the concrete bridge traffic rails.

For Expansion Joint Details, see Dwg. No. 67328 and Std. Dwg. No. 55008.

(1) "X" = 5'-1¾" + Bottom Flange Thickness, measured at CL Bearing & CL Girder.

(2) S501E - 2 equal spaces

(3) Haunch dimensions may vary +1½", -1" to maintain the grade and slab thickness.

(4) For additional details of Bridge Traffic Rail Type SSTR36, see Dwg. No. 67328 and Std. Dwg. No. 55070.

(5) Gutterline to gutterline.

(6) See "ADJUSTMENT FOR SLAB THICKNESS TOLERANCE" on Std. Dwg. No. 55007.

(7) Tolerance: Minus = ¼", Plus equal to amount of Slab Thickening used to meet Slab Thickness Tolerance, see "ADJUSTMENT FOR SLAB THICKNESS TOLERANCE" on Std. Dwg. No. 55007.

STATE OF ARKANSAS
LICENSED PROFESSIONAL ENGINEER
No. 17472
TRAVIS MICHAEL RAPP
7/24/2024
BRIDGE ENGINEER

SHEET 1 OF 5
DETAILS OF 240'-0" CONTINUOUS PLATE GIRDER UNIT
ROUTE SEC.
ARKANSAS STATE HIGHWAY COMMISSION
LITTLE ROCK, ARK.

DRAWN BY:	TLW	DATE:	1/2024	FILENAME:	b061741_s1
CHECKED BY:	HRA	DATE:	2/2024	SCALE:	AS SHOWN
DESIGNED BY:	CBM	DATE:	1/2024		

BRIDGE NO. 07680 DRAWING NO. 67324

DATE REVISED	DATE REVISED	FED. RD. DIST. NO.	STATE	JOB NO.	SHEET NO.	TOTAL SHEETS
		6	ARK.	061741	100	136
		07680 -		240 FT. UNIT		- 67325

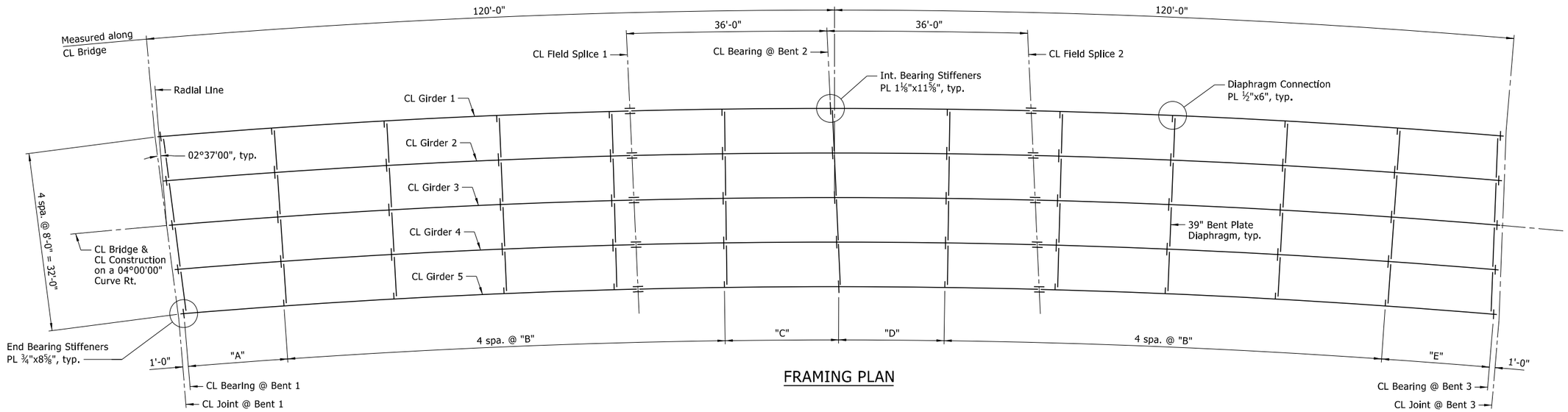

FRAMING PLAN

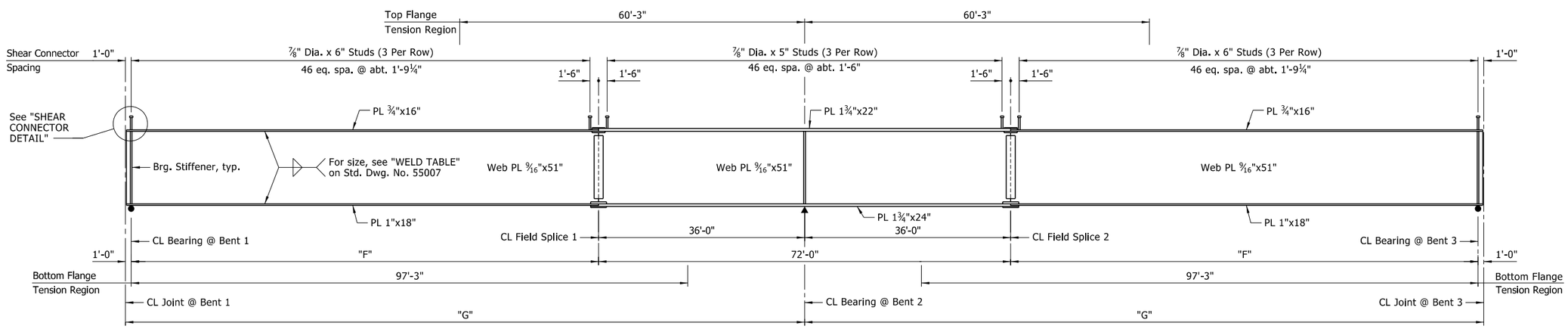

GIRDER ELEVATION

NOTES:
All structural steel shall be ASTM A709, Gr. 50 unless otherwise noted and shall be paid for as "STRUCTURAL STEEL IN PLATE GIRDER SPANS (A709, GR. 50)". See Std. Dwg. Nos. 55006 and 55007 for additional notes and details.

CL Joint and End of Girder are vertical, see Std. Dwg. No. 55008.

All girders are oriented along curves concentric with CL Bridge and CL Construction.

All diaphragms at bents shall be placed along the skew. All interior diaphragms shall be placed radial to the curve.

TABLE OF VARIABLES

GIRDER NO.	RADIUS	"A"	"B"	"C"	"D"	"E"	"F"	"G"
1	1,448'-4¾"	19'-11½"	20'-2 11/16"	19'-5 13/16"	20'-11 7/16"	18'-5⅞"	84'-4 1/16"	121'-4 1/16"
2	1,440'-4¾"	19'-5⅞"	20'-1 5/16"	19'-8 15/16"	20'-5¾"	18'-9 1/16"	83'-8 1/16"	120'-8 1/16"
3	1,432'-4¾"	19'-0"	20'-0"	20'-0"	20'-0"	19'-0"	83'-0"	120'-0"
4	1,424'-4¾"	18'-6 7/16"	19'-10⅝"	20'-3"	19'-6 5/16"	19'-3⅛"	82'-3 15/16"	119'-3 15/16"
5	1,416'-4¾"	18'-0⅜"	19'-9 5/16"	20'-6 1/16"	19'-0 9/16"	19'-6⅛"	81'-7 15/16"	118'-7 15/16"

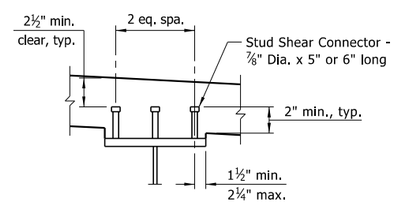

Place Stud Shear Connectors as shown. Stud Shear Connectors shall be automatically end welded to the girder flange in accordance with the recommendations of the Manufacturer. See "GIRDER ELEVATION" for spacing.

SHEAR CONNECTOR DETAIL

Looking Ahead Station

STATE OF ARKANSAS
LICENSED PROFESSIONAL ENGINEER
No. 17472
TRAVIS MICHAEL RAPP
7/24/2024
BRIDGE ENGINEER

SHEET 2 OF 5
DETAILS OF 240'-0" CONTINUOUS PLATE GIRDER UNIT

ROUTE SEC.

ARKANSAS STATE HIGHWAY COMMISSION
LITTLE ROCK, ARK.

DRAWN BY:	TLW	DATE:	1/2024	FILENAME:	b061741_s2
CHECKED BY:	HRA	DATE:	2/2024	SCALE:	NO SCALE
DESIGNED BY:	CBM	DATE:	1/2024		

BRIDGE NO. 07680 DRAWING NO. 67325

DATE REVISED	DATE REVISED	FED. RD. DIST. NO.	STATE	JOB NO.	SHEET NO.	TOTAL SHEETS
		6	ARK.	061741	101	136
		07680 -		240 FT. UNIT		- 67326

NOTES:
Bearing Stiffeners shall be fabricated to be plumb in their final positions.

Bearing Stiffeners and Diaphragms at Bents are oriented along the skew.

Interior Diaphragms are placed radial to the curve.

(1) For size, see "WELD TABLE" on Std. Dwg. No. 55007.

(2) Omit holes in bearing stiffeners on the outside face of exterior girders. For location of Diaphragms, see "FRAMING PLAN" on Dwg. No. 67325.

(3) Vertical placement of Bent Plate measured at CL Girder.

(4) If permanent deck forms are used, the Fabricator shall clip the plate as necessary to accomodate the deck form supports.

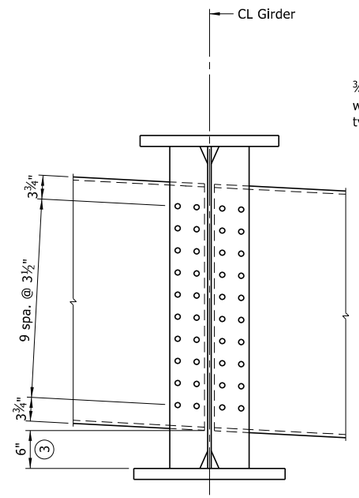

AT INTERIOR DIAPHRAGMS

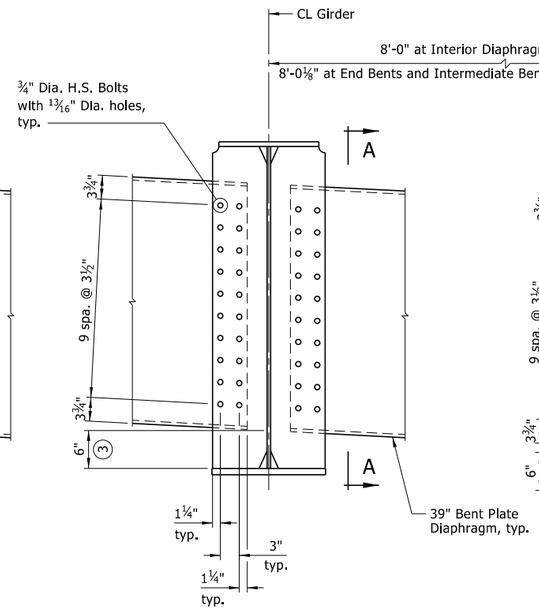

AT END BENTS

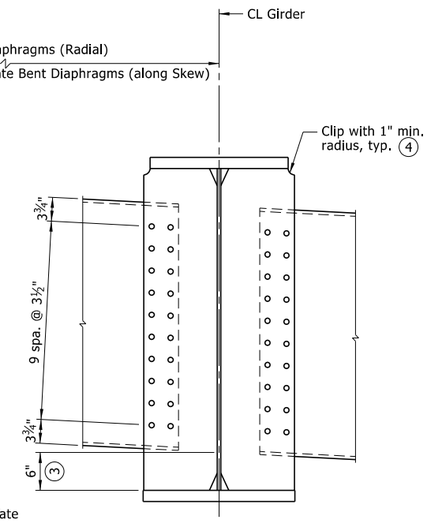

AT INTERMEDIATE BENT

DIAPHRAGM CONNECTION DETAIL

Scale: 1" = 1'-0"

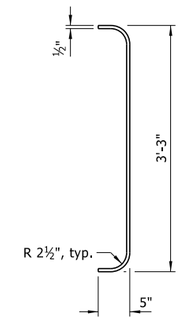

SECTION A-A

Scale: 1" = 1'-0"

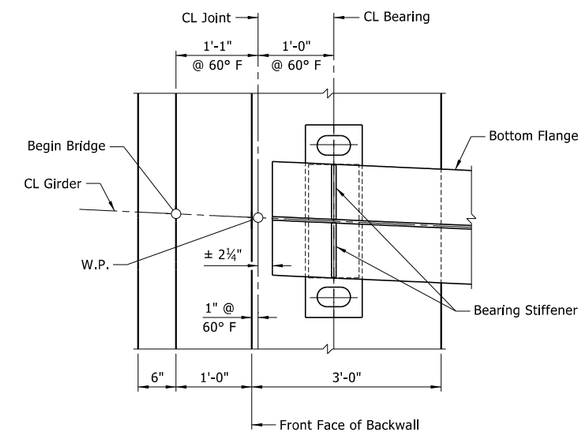

BEARING PLAN AT END BENT

Bent 1 Shown, Bent 3 Similar
Scale: 1" = 1'-0"

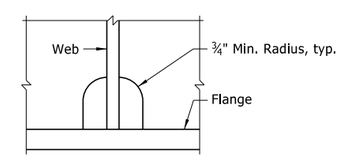

Height and width of clip shall be as noted in other details.

ALTERNATE CLIP DETAIL

For Bearing Stiffeners and Connection Plates
No Scale

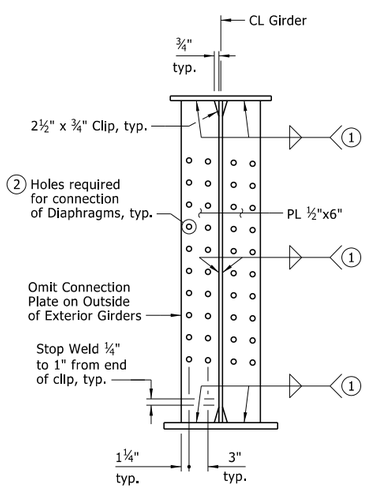

DIAPHRAGM CONNECTION PLATE

Scale: 1" = 1'-0"

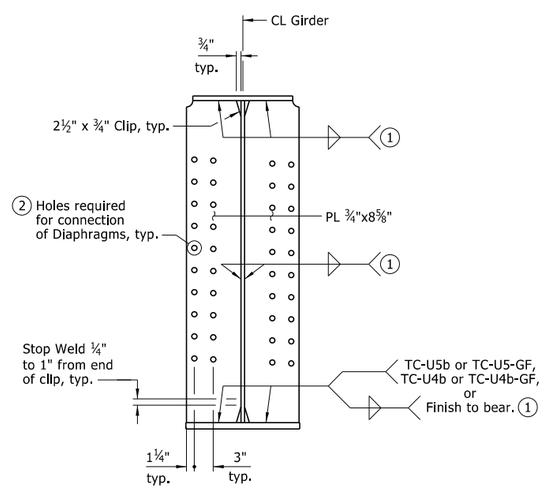

BEARING STIFFENER
AT END BENTS

Looking Perpendicular to Stiffener
Scale: 1" = 1'-0"

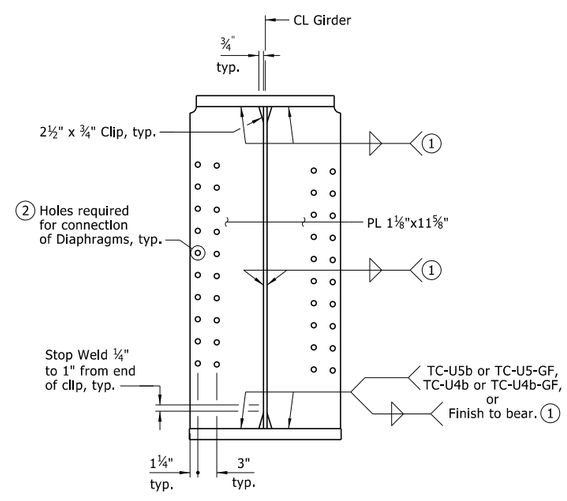

BEARING STIFFENER
AT INTERMEDIATE BENT

Looking Perpendicular to Stiffener
Scale: 1" = 1'-0"

STATE OF ARKANSAS
LICENSED PROFESSIONAL ENGINEER
No. 17472
TRAVIS MICHAEL RAPP
7/24/2024

BRIDGE ENGINEER

SHEET 3 OF 5
DETAILS OF 240'-0" CONTINUOUS
PLATE GIRDER UNIT

ROUTE SEC.

ARKANSAS STATE HIGHWAY COMMISSION

LITTLE ROCK, ARK.

DRAWN BY:	TLW	DATE:	1/2024	FILENAME:	b061741_s3
CHECKED BY:	HRA	DATE:	2/2024	SCALE:	AS SHOWN
DESIGNED BY:	CBM	DATE:	1/2024		

BRIDGE NO. 07680 DRAWING NO. 67326

DATE REVISED	DATE REVISED	FED. RD. DIST. NO.	STATE	JOB NO.	SHEET NO.	TOTAL SHEETS
		6	ARK.	061741	102	136
		07680 -		240 FT. UNIT		- 67327

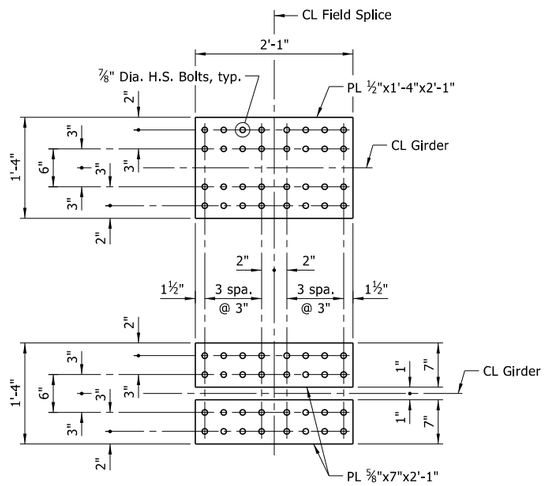

TOP FLANGE FIELD SPLICE

Scale: 1" = 1'-0"

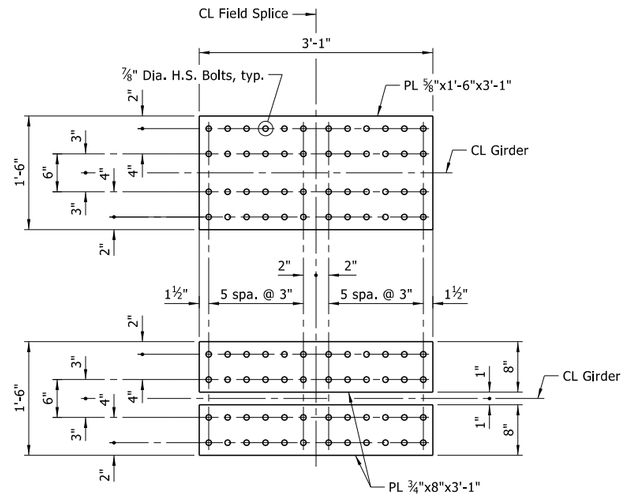

BOTTOM FLANGE FIELD SPLICE

Scale: 1" = 1'-0"

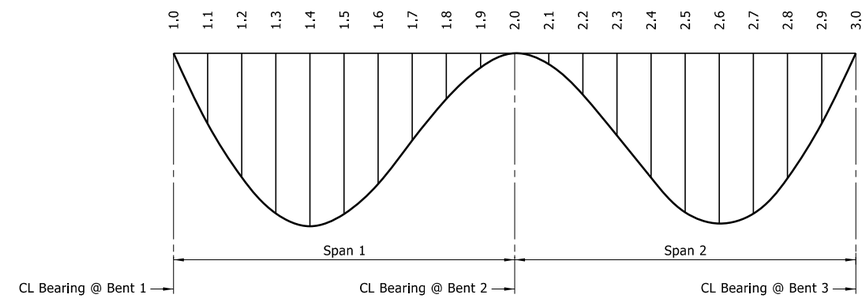

DEAD LOAD DEFLECTION DIAGRAM

No Scale

NOTES:
Camber for dead load deflection plus vertical curve ± ¼" tolerance. Deflections shown are along CL Girder from the plane perpendicular to the web extending from CL Bearing to CL Bearing. Vertical curve corrections not included. Negative sign (-) indicates point above plane.

Dead load deflections shown include a non-composite loading of 18.0 psf for additional weight associated with the use of stay-in-place metal deck forms. Revisions to the table may be necessary upon review of the Contractor's submitted forming details.

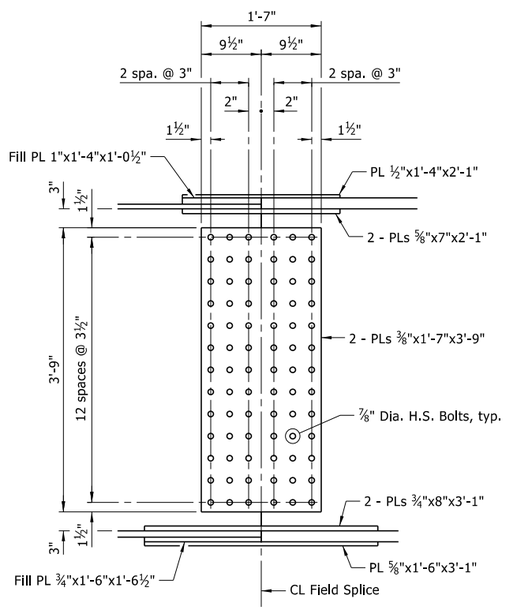

DETAILS OF FIELD SPLICE

Scale: 1" = 1'-0"

NOTES:
All field splice bolts shall be ⅞" Dia. H.S. Bolts.

All holes for splice bolts shall be 15/16" Dia.

All field splice plates shall be ASTM A709, Gr. 50 steel.

Bolted field splices may be eliminated or shop welded splices may be substituted with the approval of the Engineer. Payment will be made on the basis of plan quantities.

TABLE OF DEAD LOAD DEFLECTIONS (INCHES)

	GIRDER NO.	GIRDER 1			GIRDER 2			GIRDER 3			GIRDER 4			GIRDER 5		
	POINT OF DEFLECTION	STRUCTURAL STEEL	STRUCTURAL STEEL + SLAB	STRUCTURAL STEEL + SLAB + RAIL	STRUCTURAL STEEL	STRUCTURAL STEEL + SLAB	STRUCTURAL STEEL + SLAB + RAIL	STRUCTURAL STEEL	STRUCTURAL STEEL + SLAB	STRUCTURAL STEEL + SLAB + RAIL	STRUCTURAL STEEL	STRUCTURAL STEEL + SLAB	STRUCTURAL STEEL + SLAB + RAIL	STRUCTURAL STEEL	STRUCTURAL STEEL + SLAB	STRUCTURAL STEEL + SLAB + RAIL
SPAN 1	1.0	0.000	0.000	0.000	0.000	0.000	0.000	0.000	0.000	0.000	0.000	0.000	0.000	0.000	0.000	0.000
	1.1	0.203	0.911	0.983	0.196	0.886	0.954	0.189	0.854	0.918	0.181	0.808	0.869	0.171	0.749	0.808
	1.2	0.357	1.596	1.723	0.345	1.553	1.673	0.333	1.498	1.612	0.319	1.420	1.528	0.303	1.320	1.424
	1.3	0.461	2.056	2.221	0.446	2.002	2.158	0.431	1.932	2.080	0.414	1.834	1.975	0.395	1.710	1.845
	1.4	0.501	2.223	2.403	0.485	2.163	2.333	0.469	2.086	2.247	0.450	1.980	2.134	0.429	1.847	1.994
	1.5	0.466	2.057	2.226	0.453	2.003	2.162	0.439	1.936	2.087	0.423	1.841	1.986	0.404	1.721	1.860
	1.6	0.381	1.671	1.811	0.373	1.634	1.766	0.362	1.581	1.706	0.349	1.502	1.622	0.333	1.403	1.518
	1.7	0.256	1.108	1.203	0.253	1.096	1.186	0.248	1.067	1.153	0.239	1.016	1.098	0.230	0.951	1.030
	1.8	0.137	0.587	0.639	0.138	0.590	0.639	0.135	0.575	0.622	0.130	0.544	0.589	0.124	0.507	0.550
	1.9	0.044	0.182	0.199	0.046	0.194	0.211	0.046	0.193	0.209	0.045	0.185	0.200	0.044	0.174	0.189
SPAN 2	2.0	0.000	0.000	0.000	0.000	0.000	0.000	0.000	0.000	0.000	0.000	0.000	0.000	0.000	0.000	0.000
	2.1	0.033	0.140	0.152	0.034	0.144	0.156	0.034	0.143	0.155	0.033	0.138	0.149	0.032	0.130	0.141
	2.2	0.125	0.534	0.581	0.126	0.541	0.586	0.124	0.530	0.573	0.120	0.504	0.545	0.115	0.471	0.511
	2.3	0.241	1.045	1.135	0.240	1.040	1.126	0.235	1.015	1.097	0.228	0.970	1.049	0.219	0.909	0.985
	2.4	0.362	1.584	1.717	0.355	1.555	1.681	0.346	1.510	1.630	0.335	1.438	1.553	0.320	1.344	1.455
	2.5	0.458	2.024	2.191	0.447	1.979	2.137	0.435	1.919	2.069	0.420	1.830	1.974	0.402	1.712	1.851
	2.6	0.491	2.182	2.359	0.477	2.125	2.292	0.462	2.053	2.212	0.444	1.952	2.104	0.425	1.824	1.970
	2.7	0.462	2.062	2.228	0.447	2.007	2.163	0.432	1.937	2.085	0.415	1.839	1.981	0.396	1.718	1.854
	2.8	0.360	1.609	1.737	0.347	1.566	1.687	0.335	1.510	1.625	0.322	1.433	1.543	0.307	1.336	1.441
	2.9	0.201	0.901	0.973	0.194	0.879	0.946	0.188	0.849	0.913	0.180	0.806	0.867	0.172	0.752	0.811
	3.0	0.000	0.000	0.000	0.000	0.000	0.000	0.000	0.000	0.000	0.000	0.000	0.000	0.000	0.000	0.000

STATE OF ARKANSAS
LICENSED PROFESSIONAL ENGINEER
No. 17472
TRAVIS MICHAEL RAPP
7/24/2024
BRIDGE ENGINEER

SHEET 4 OF 5
DETAILS OF 240'-0" CONTINUOUS PLATE GIRDER UNIT
ROUTE SEC.
ARKANSAS STATE HIGHWAY COMMISSION
LITTLE ROCK, ARK.

DRAWN BY: TLW DATE: 1/2024 FILENAME: b061741_s4
CHECKED BY: HRA DATE: 2/2024 SCALE: AS SHOWN
DESIGNED BY: CBM DATE: 1/2024

BRIDGE NO. 07680 DRAWING NO. 67327

DATE REVISED	DATE REVISED	FED. RD. DIST. NO.	STATE	JOB NO.	SHEET NO.	TOTAL SHEETS
		6	ARK.	061741	103	136
		07680 -		240 FT. UNIT		- 67328

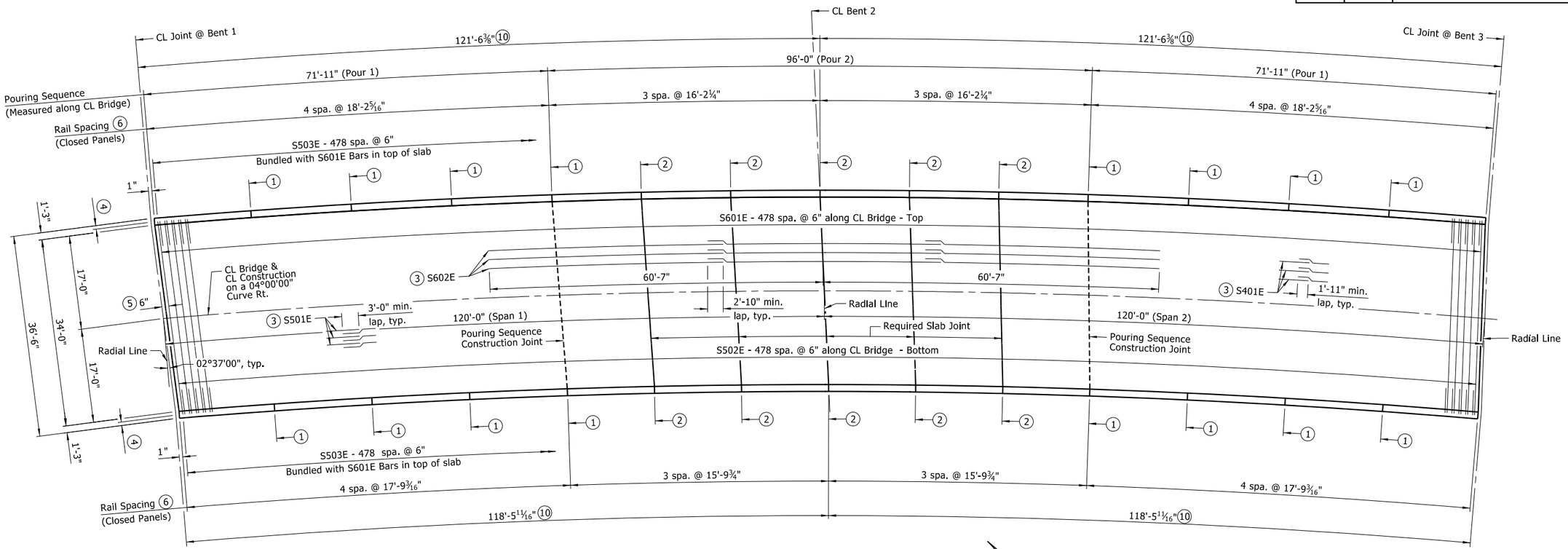

SLAB PLAN & DECK POURING SEQUENCE

No Scale

TABLE OF VARIABLES (6)

CLOSED RAIL PANELS		
PANEL LENGTH	A	R4XXE
15'-9¾"	31	R404E
16'-2¼"	32	R405E
17'-9 3/16"	35	R406E
18'-2 5/16"	36	R407E
12'-0"	23	R408E
16'-0"	31	R409E

TABLE OF SILICONE JOINT DATA (12)

BENT NUMBER	"A" WIDTH PERPENDICULAR TO JOINT AT 24 HOUR AVERAGE TEMPERATURE (11) OF:			"B" PERPENDICULAR TO JOINT AT 60°F	BUMPER PLATE SIZE
	40°F	60°F	80°F		
1 & 3	2 3/16"	2"	1 13/16"	±2¼"	1" x 1"

(11) The temperature used to set the joint opening shall be the approximate average air temperature during the 24 hour period immediately before the bolts are tightened. The Engineer shall establish the temperature. Interpolation of the table may be necessary.

(12) For Expansion Joint Details, See Std. Dwg. No. 55008.

BAR LIST

	MARK	NO. REQ'D.	LENGTH	P.D.	BENDING DIAGRAMS
(6)	R401E	974	6'-4"	3"	Bar dimensions are out-to-out. Bars with an "E" suffix are to be epoxy coated.
	R402E	64	5'-6"	Str.	
(6)	R403E	974	3'-6"	3¾"	
	R404E	48	15'-5"	Str.	
	R405E	48	15'-10"	Str.	
	R406E	64	17'-5"	Str.	
	R407E	64	17'-10"	Str.	
	S401E	222	42'-1"	Str.	
	S501E	250	51'-0"	Str.	
	S502E	479	36'-2"	Str.	
	S503E	958	3'-8"	Str.	
	S601E	479	37'-6"	4½"	
	S602E	108	42'-4"	Str.	

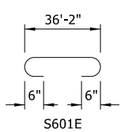

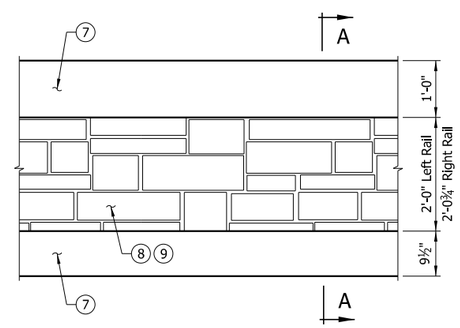

PANEL ELEVATION

Scale: ¾" = 1'-0"

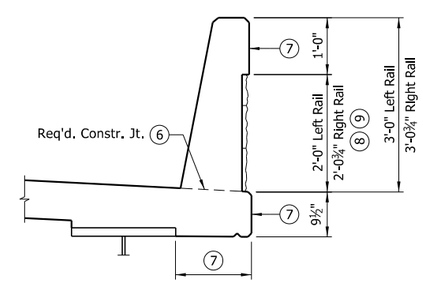

SECTION A-A

Scale: ¾" = 1'-0"

(1) CL Partial-Depth Rail Joint (¼" to 1" max.).

(2) CL Full-Depth Rail Joint (¼" to 1" max.).

(3) Place as shown in "TYPICAL ROADWAY SECTION", see Dwg. No. 67324.

(4) Typical 2" Clear Cover unless otherwise noted.

(5) Measured along CL Bridge from CL Joint to placement of first S502E, S503E, and S601E bars. Typical at beginning and end of bridge.

(6) For additional details of Bridge Traffic Rail Type SSTR36, see Std. Dwg. No. 55070.

(7) Class 3 Textured Coating Finish (Color = Brown, Color Chip No. 33522).

(8) Class 3 Textured Coating Finish (Color = Brown, Color Chip No. 30219).

(9) Ashlar Stone Pattern Form Liner. Form Liner shall be a max. depth of 1½" to provide a min. clearance of 1½" to rail reinforcing. See Special Provision "ARCHITECTURAL FINISH".

(10) Measured along outside edge of slab.

NOTES:
Rail spacing measured along gutterline.

Required slab joints and pouring sequence construction joints shall align with rail joints at base of rail.

All longitudinal lines and longitudinal reinforcing steel shall be placed on curves concentric with CL Bridge.

All transverse reinforcing steel shall be placed along the skew to radial lines at CL Bridge.

Pours with the same number may be placed simultaneously or separately. All Pour(s) 1 must be placed before Pour(s) 2 can be placed. A minimum of 48 hours shall elapse between the end of a pour and the start of the next pour. A minimum of 72 hours shall elapse between adjacent pours.

Concrete in bridge superstructure shall be placed, consolidated and screeded off for the entire pour before any concrete has taken its initial set. This may require the use of a retarding agent.

A minimum of 72 hours shall elapse between completion of the slab and the pouring of the bridge railing. Any railing pours made before the entire slab unit has been placed must be approved by the Engineer.

No deviations from the pouring sequence shown will be allowed.

STATE OF ARKANSAS
LICENSED PROFESSIONAL ENGINEER
No. 17472
TRAVIS MICHAEL RAPP
7/24/2024
BRIDGE ENGINEER

SHEET 5 OF 5
DETAILS OF 240'-0" CONTINUOUS PLATE GIRDER UNIT

ROUTE SEC.

ARKANSAS STATE HIGHWAY COMMISSION
LITTLE ROCK, ARK.

DRAWN BY:	TWM	DATE:	1/2024	FILENAME:	b061741_s5
CHECKED BY:	HRA	DATE:	2/2024	SCALE:	AS SHOWN
DESIGNED BY:	CBM	DATE:	1/2024		

BRIDGE NO. 07680 DRAWING NO. 67328

DATE REVISED	DATE REVISED	FED.RD. DIST.NO.	STATE	JOB NO.	SHEET NO.	TOTAL SHEETS
		6	ARK.	061741	104	136
		CROSS SECTIONS				

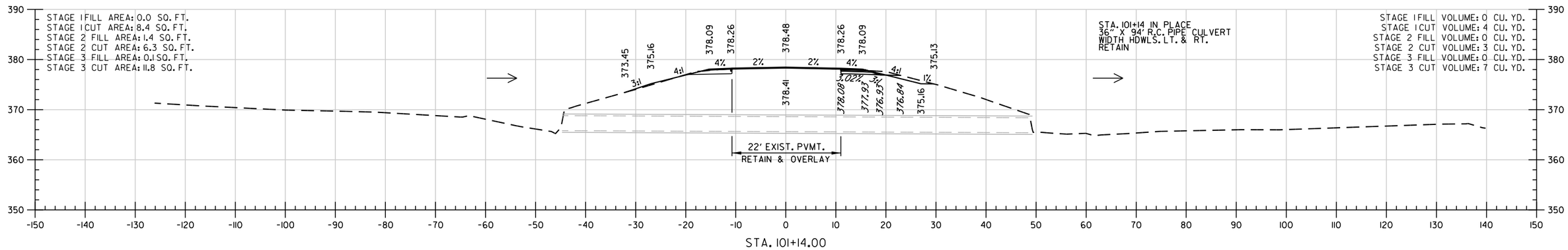

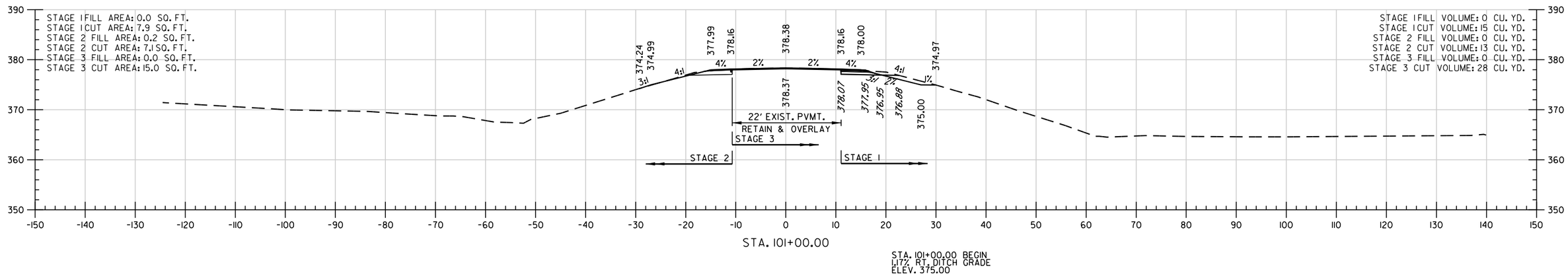

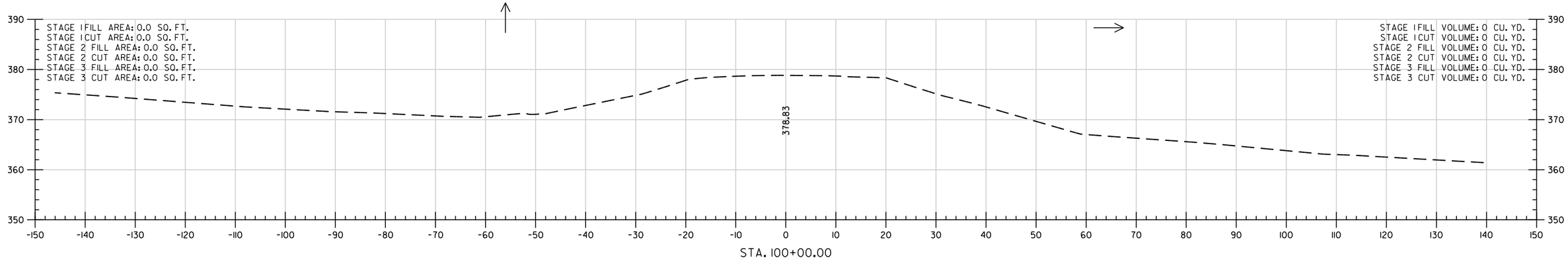

HWY. 283
STA. 100+00.00 TO STA. 101+14.00

5/2/2024
2:47:03 PM
...\Road_Sheets\CX\r061741_CX.dgn

DATE REVISED	DATE REVISED	FED.RD. DIST.NO.	STATE	JOB NO.	SHEET NO.	TOTAL SHEETS
		6	ARK.	061741	105	136
		CROSS SECTIONS				

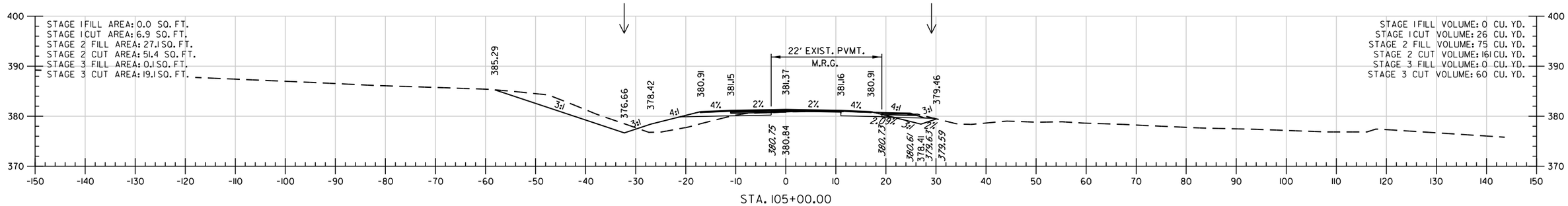

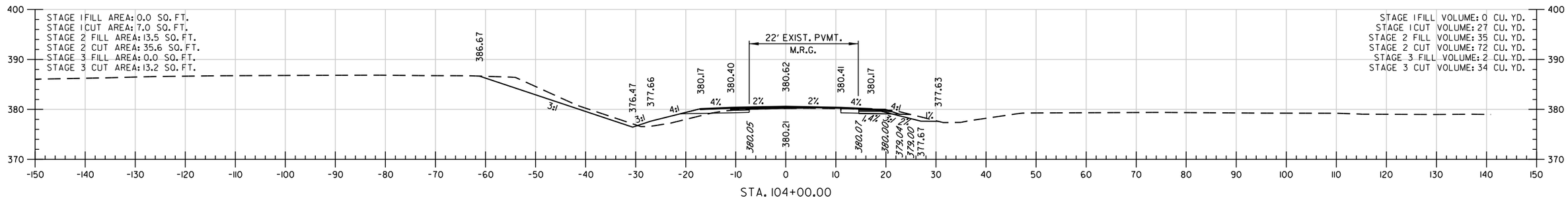

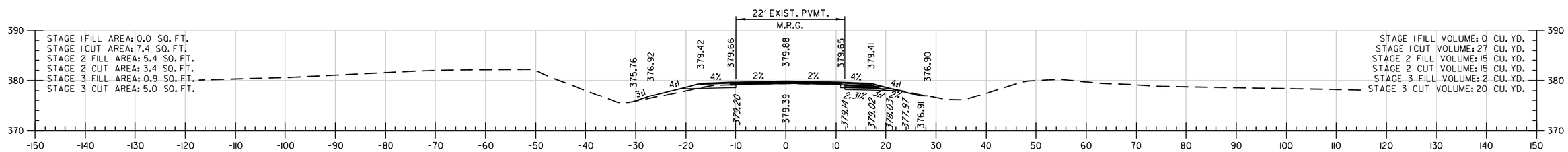

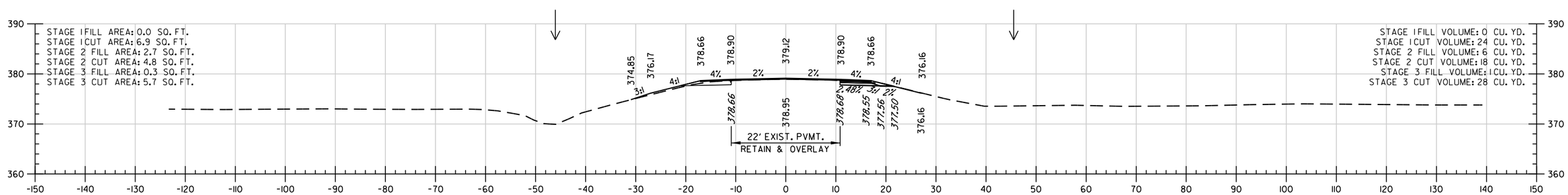

STA. 102+00.00
BEGIN JOB 061741

STA. 102+00.00 BEGIN
0.75% RT. DITCH GRADE
ELEV. 376.17

STA. 102+00.00 END
1.17% RT. DITCH GRADE
ELEV. 376.17

HWY. 283
STA. 102+00.00 TO STA. 105+00.00

5/2/2024
2:47:03 PM
...\Road_Sheets\CX\r061741_CX.dgn

DATE REVISED	DATE REVISED	FED.RD. DIST.NO.	STATE	JOB NO.	SHEET NO.	TOTAL SHEETS
		6	ARK.	061741	106	136
		CROSS SECTIONS				

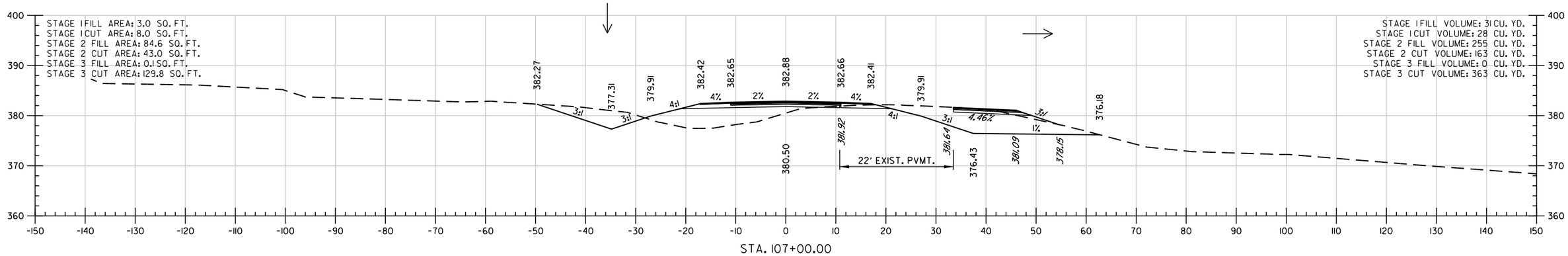

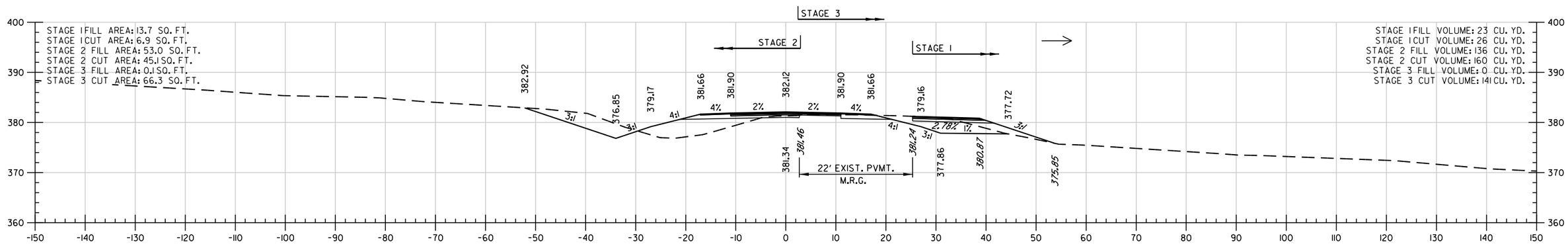

STA. 105+40.00 BEGIN
-1.43% RT. DITCH GRADE
ELEV. 378.72

STA. 105+40.00 END
0.75% RT. DITCH GRADE
ELEV. 378.72

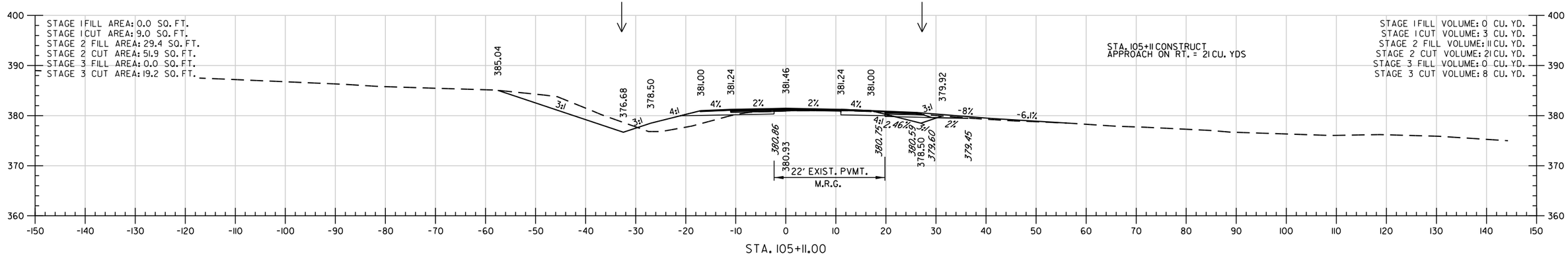

HWY. 283
STA. 105+11.00 TO STA. 107+00.00

5/2/2024
2:47:03 PM
...\Road_Sheets\CX\r061741_CX.dgn

DATE REVISED	DATE REVISED	FED.RD. DIST.NO.	STATE	JOB NO.	SHEET NO.	TOTAL SHEETS
		6	ARK.	061741	107	136
		CROSS SECTIONS				

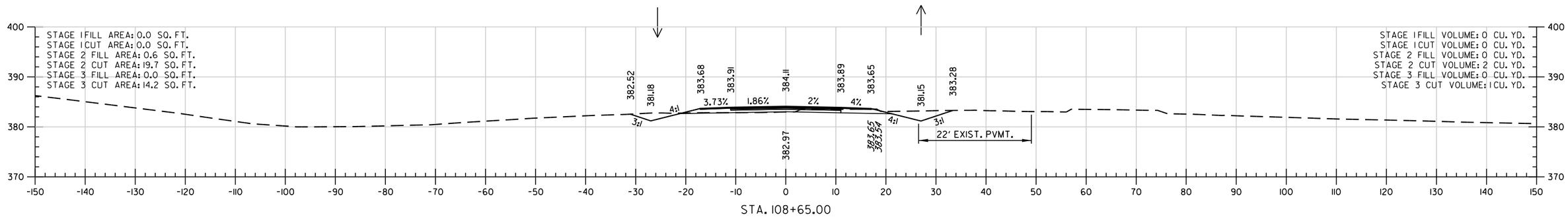

STA. 108+65.00

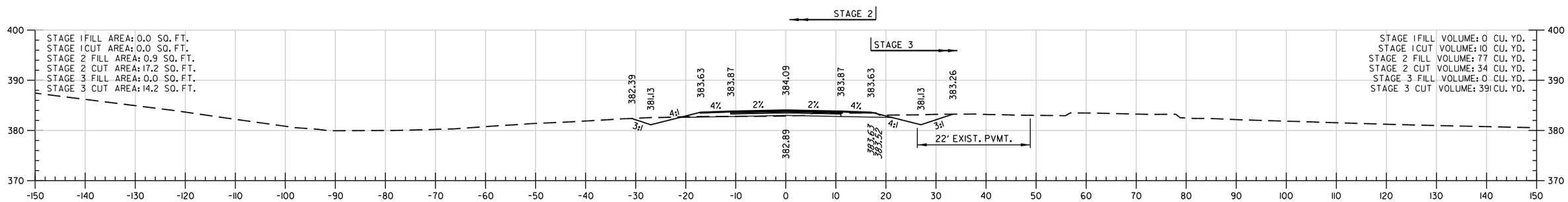

STA. 108+62.43
BEGIN SUPERELEVATION

STA. 108+50.00 END
12.08% RT. DITCH GRADE
ELEV. 381.04

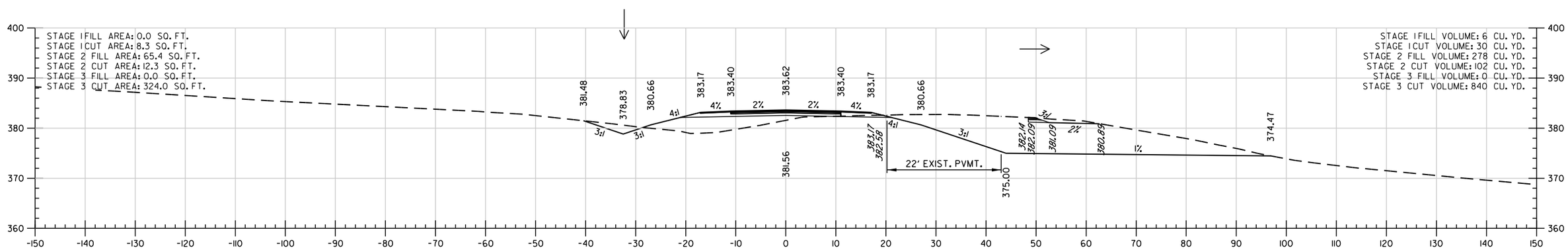

STA. 108+00.00

STA. 108+00.00 BEGIN
12.08% RT. DITCH GRADE
ELEV. 375.00

STA. 108+00.00 END
-1.43% RT. DITCH GRADE
ELEV. 375.00

HWY. 283
STA. 108+00.00 TO STA. 108+65.00

5/2/2024
2:47:04 PM
...\Road_Sheets\CX\r061741_CX.dgn

DATE REVISED	DATE REVISED	FED.RD. DIST.NO.	STATE	JOB NO.	SHEET NO.	TOTAL SHEETS
		6	ARK.	061741	108	136
		CROSS SECTIONS				

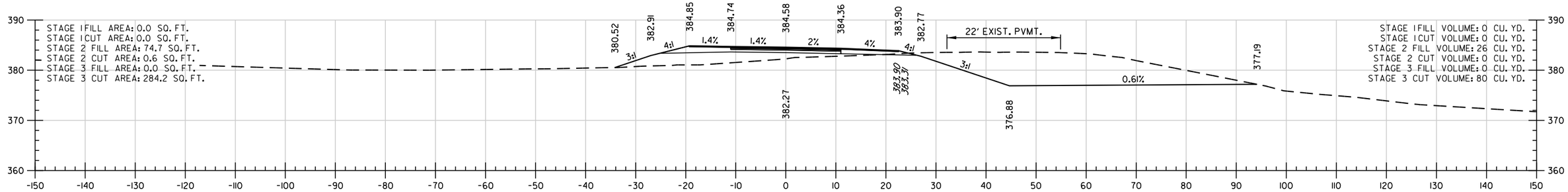

STA. 109+27.74

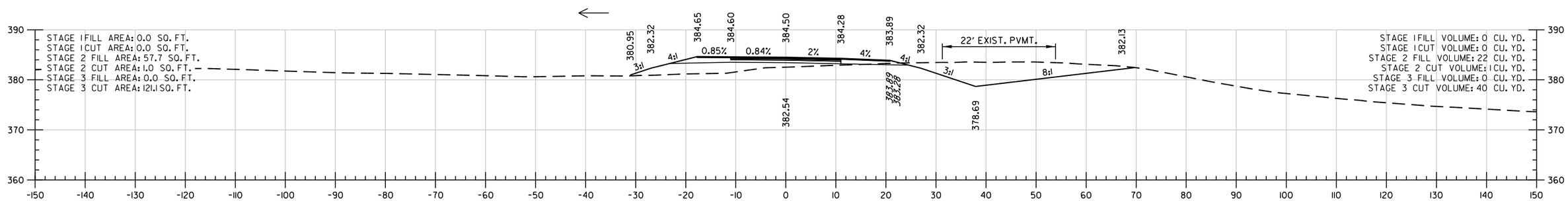

STA. 109+17.03

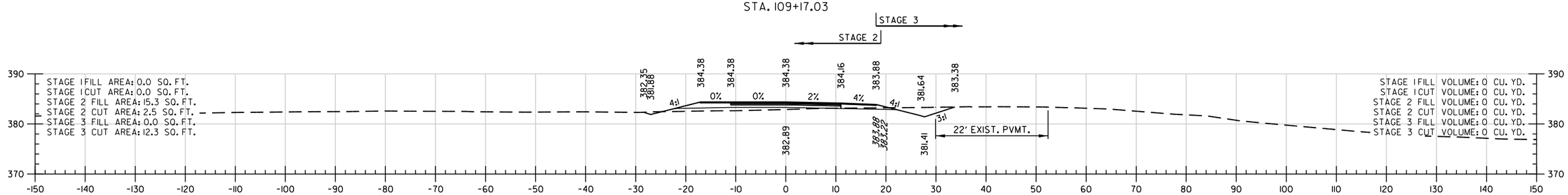

STA. 109+00.89
LEVEL CROWN

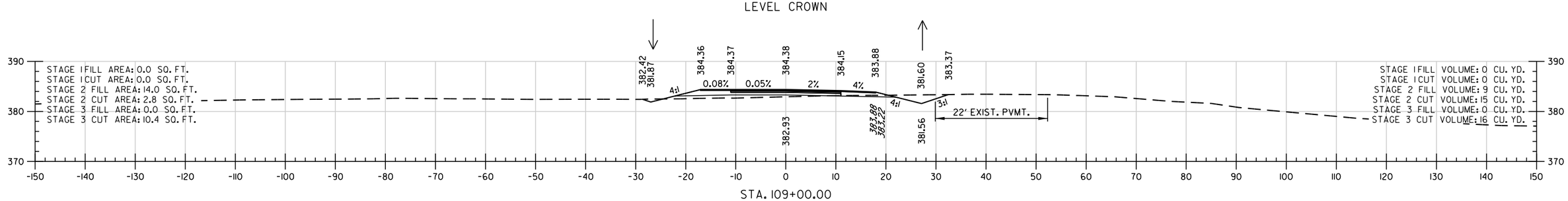

STA. 109+00.00

STA. 109+00.00 BEGIN
-16.87% RT. DITCH GRADE
ELEV. 381.56

HWY. 283
STA. 109+00.00 TO STA. 109+27.74

5/21/2024
2:47:07 PM
...\Road_Sheets\CX\r061741_CX.dgn

DATE REVISED	DATE REVISED	FED.RD. DIST.NO.	STATE	JOB NO.	SHEET NO.	TOTAL SHEETS
		6	ARK.	061741	109	136
		CROSS SECTIONS				

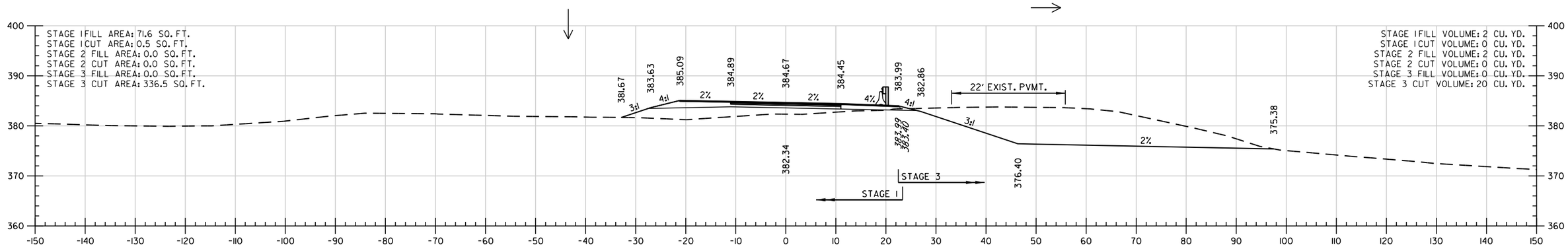

STA. 109+39.35
REVERSE CROWN

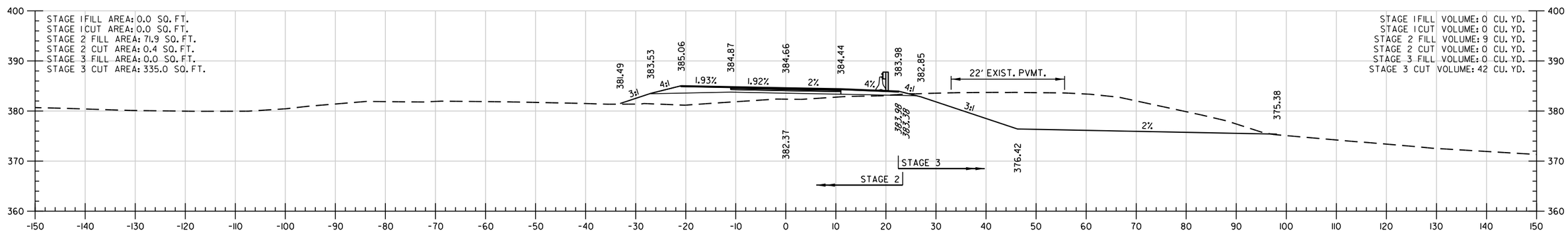

STA. 109+37.74

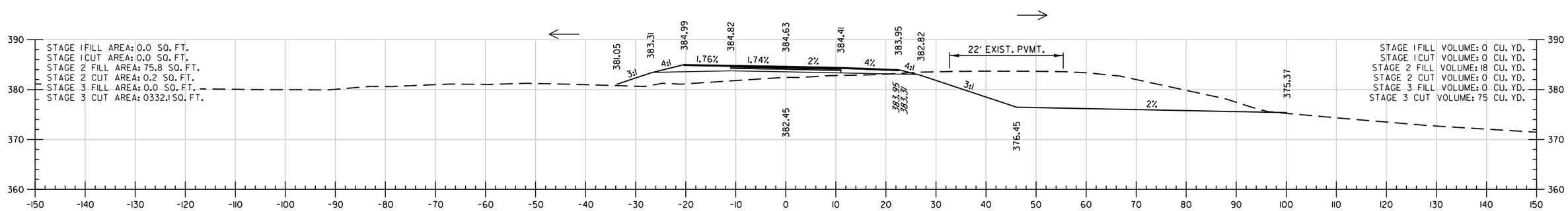

STA. 109+34.30

STA. 109+30.00 BEGIN
-1.06% RT. DITCH GRADE
ELEV. 376.50

STA. 109+30.00 END
-16.87% RT. DITCH GRADE
ELEV. 376.50

HWY. 283
STA. 109+34.30 TO STA. 109+39.35

5/7/2024
2:47:02 PM
...\Road_Sheets\CX\r061741_CX.dgn

DATE REVISED	DATE REVISED	FED.RD. DIST.NO.	STATE	JOB NO.	SHEET NO.	TOTAL SHEETS
		6	ARK.	061741	110	136
		CROSS SECTIONS				

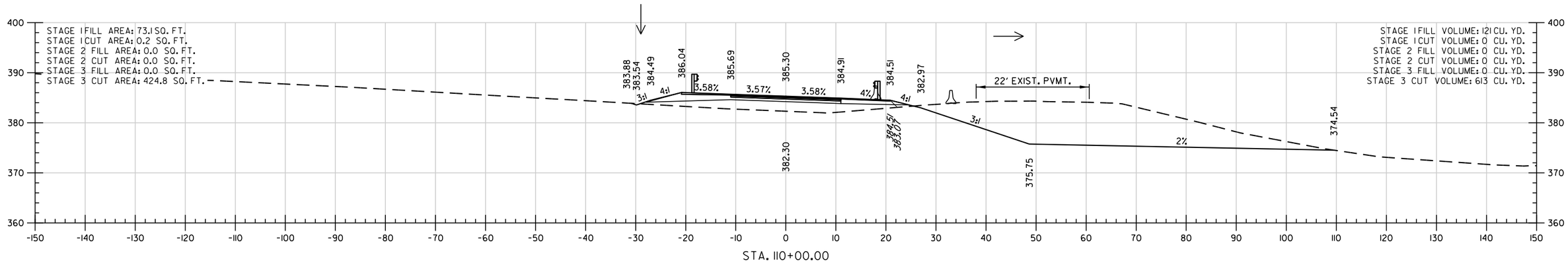

STA. 110+00.00

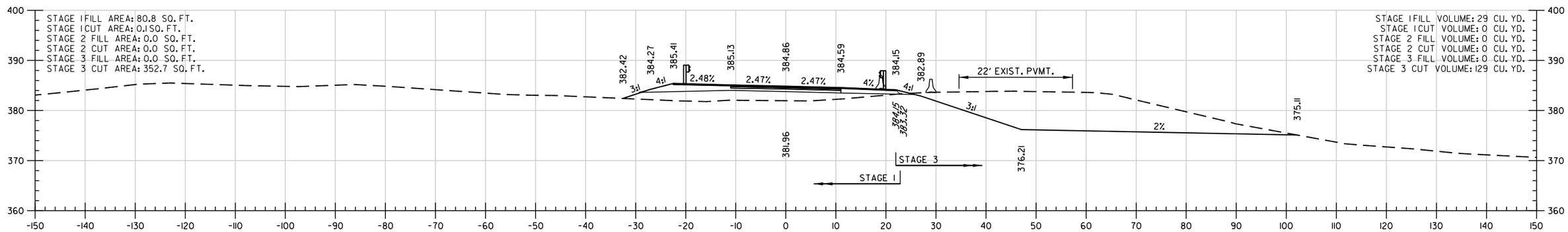

STA. 109+57.45

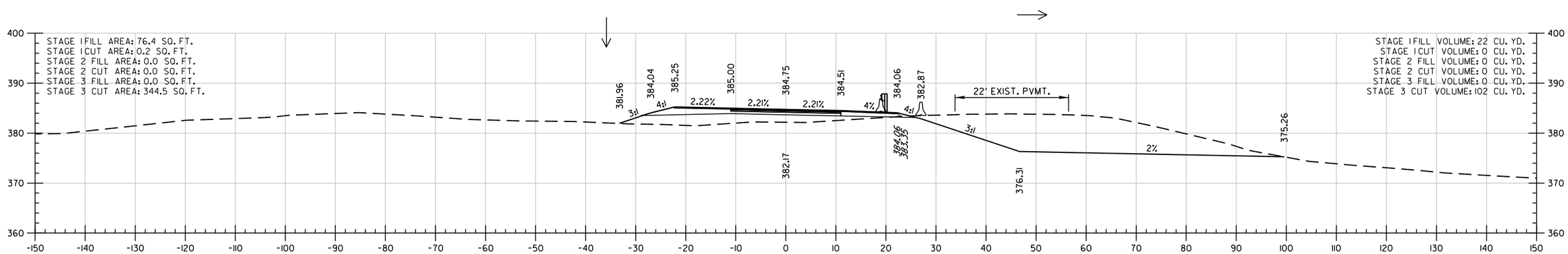

STA. 109+47.45

HWY. 283
STA. 109+47.45 TO STA. 110+00.00

5/2/2024
2:41:04 PM
...\Road\Sheets\CX\r061741_CX.dgn

DATE REVISED	DATE REVISED	FED.RD. DIST.NO.	STATE	JOB NO.	SHEET NO.	TOTAL SHEETS
		6	ARK.	061741	111	136
		CROSS SECTIONS				

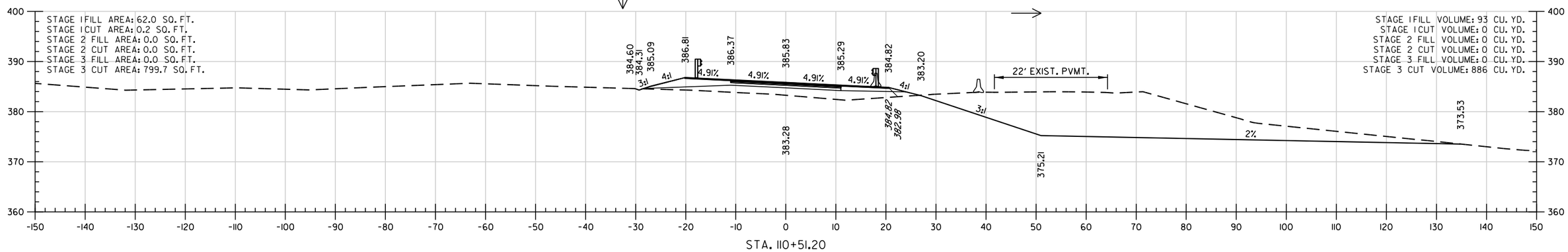

STA. 110+51.20

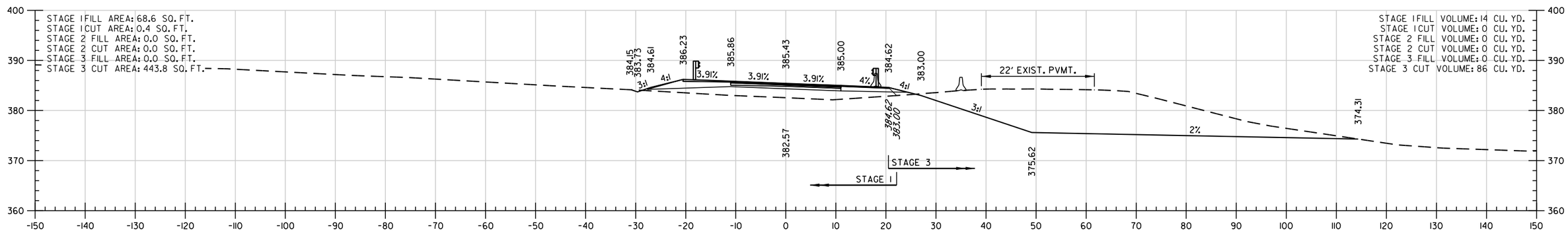

STA. 110+12.74

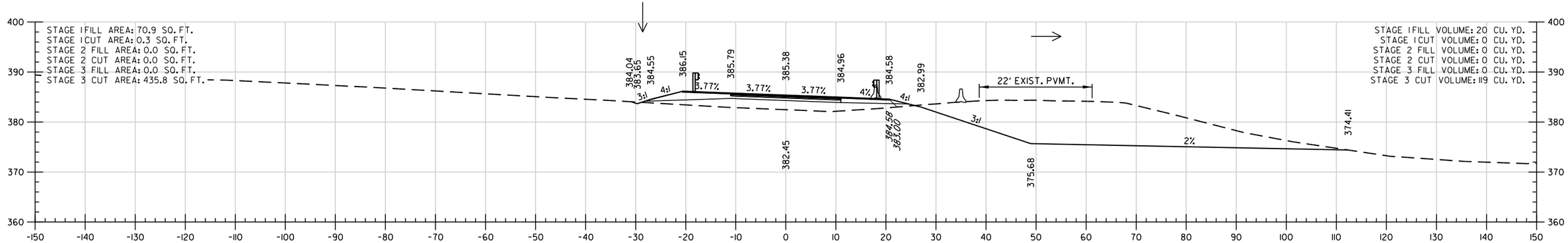

STA. 110+07.45

HWY. 283
STA. 110+07.45 TO STA. 110+51.20

5/2/2024
2:47:05 PM
...\Road.Sheets\CX\r061741_CX.dgn

DATE REVISED	DATE REVISED	FED.RD. DIST.NO.	STATE	JOB NO.	SHEET NO.	TOTAL SHEETS
		6	ARK.	061741	112	136
		CROSS SECTIONS				

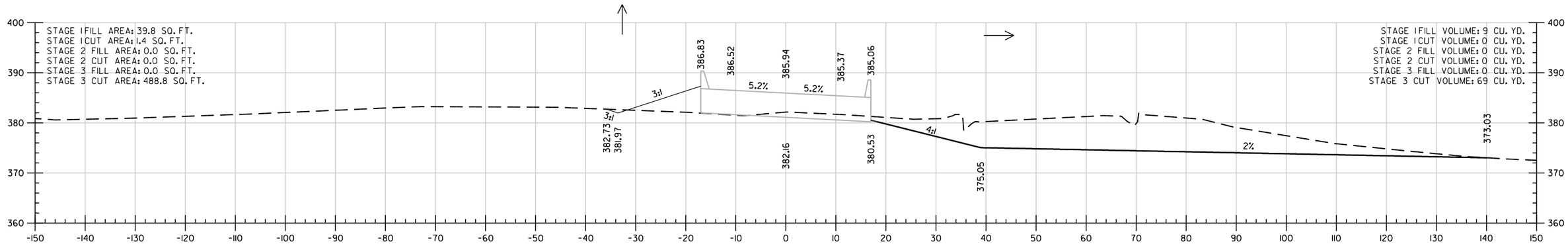

STA. 110+66.22

STA. 110+66.22 END
-1.06% RT. DITCH GRADE
ELEV. 375.05

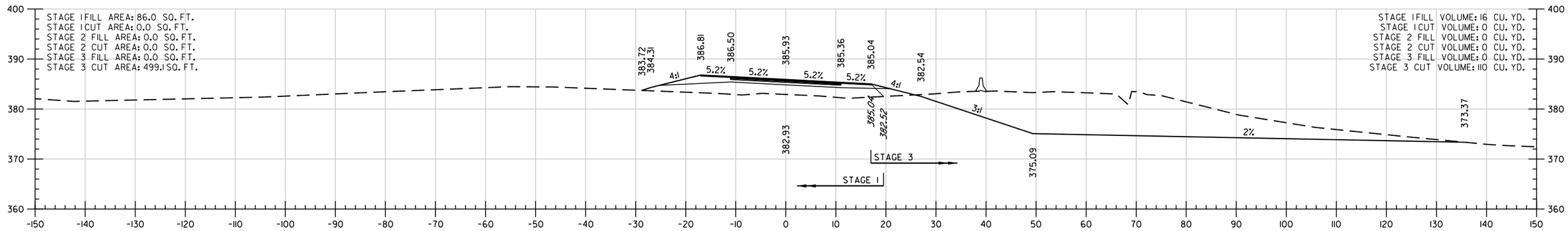

STA. 110+62.43
MAX SUPERELEVATION

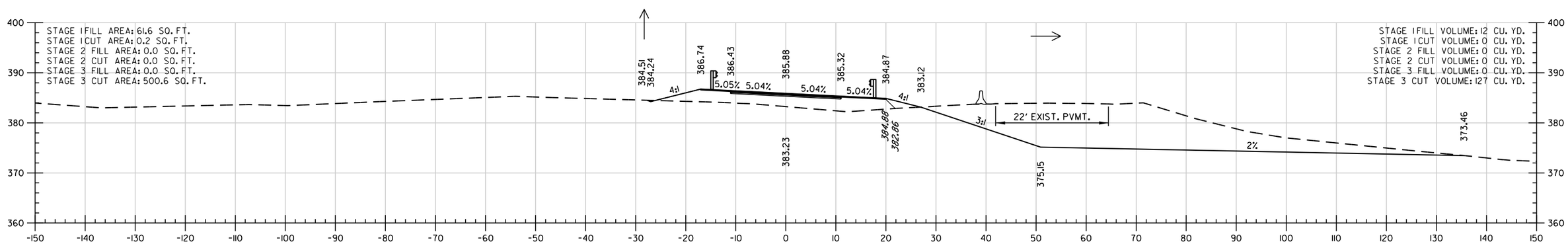

STA. 110+56.49

HWY. 283
STA. 110+56.49 TO STA. 110+66.22

5/2/2024
2:47:05 PM
...\Road.Sheets\CX\r061741_CX.dgn

DATE REVISED	DATE REVISED	FED.RD. DIST.NO.	STATE	JOB NO.	SHEET NO.	TOTAL SHEETS
		6	ARK.	061741	113	136
		CROSS SECTIONS				

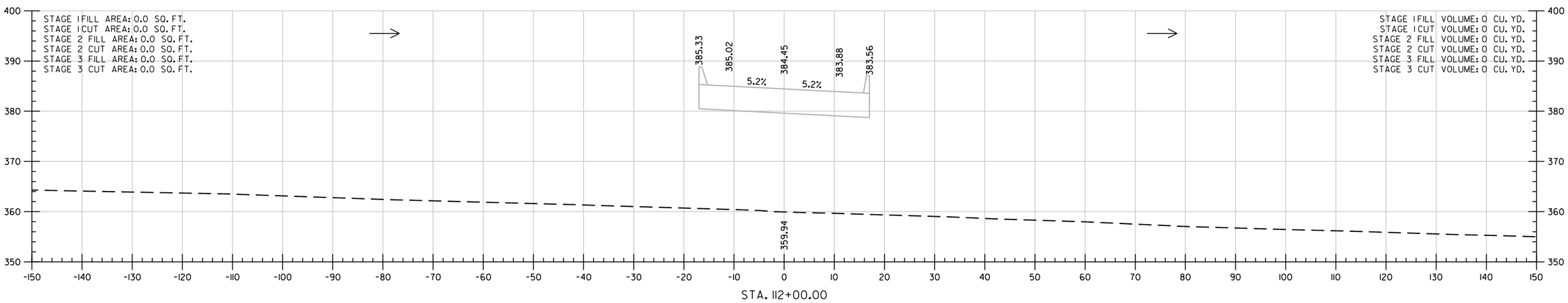

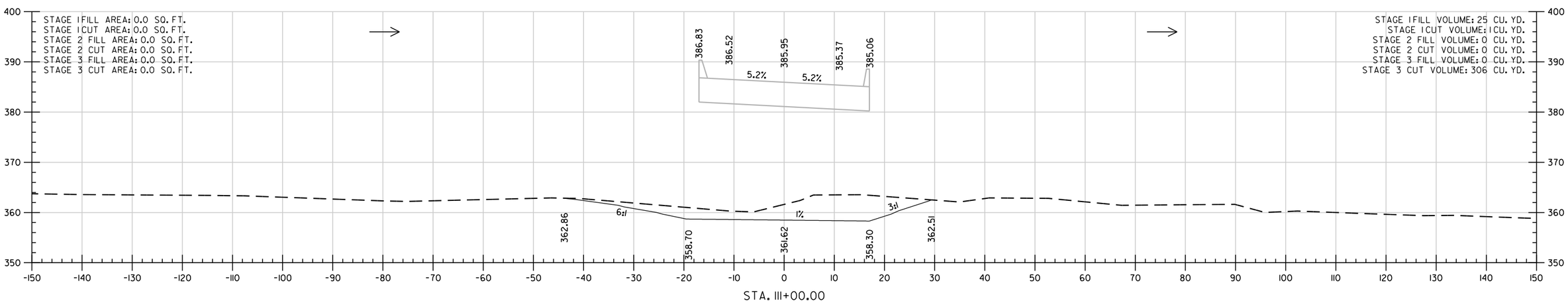

HWY. 283
STA. 111+00.00 TO STA. 112+00.00

5/2/2024
2:47:05 PM
...\Road_Sheets\CX\r061741_CX.dgn

DATE REVISED	DATE REVISED	FED.RD. DIST.NO.	STATE	JOB NO.	SHEET NO.	TOTAL SHEETS
		6	ARK.	061741	114	136
		CROSS SECTIONS				

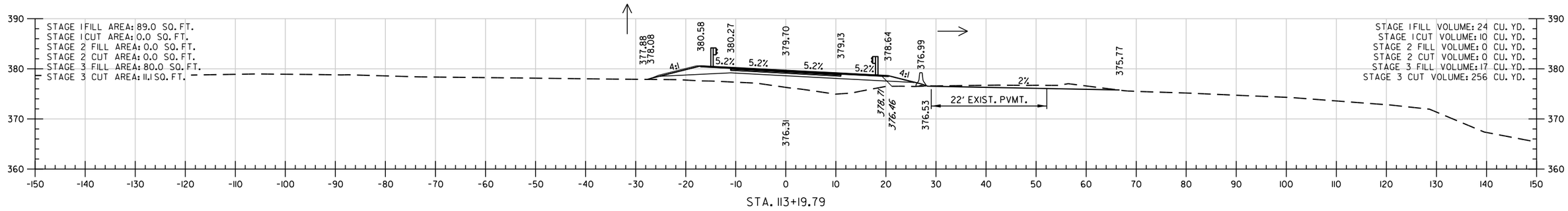

STA. 113+19.79

STA. 113+10.00 BEGIN
-3.75% RT. DITCH GRADE
ELEV. 376.90

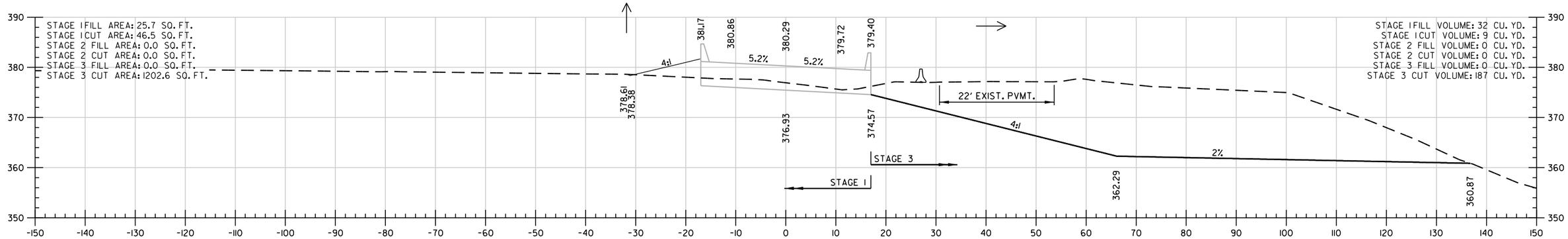

STA. 113+08.39

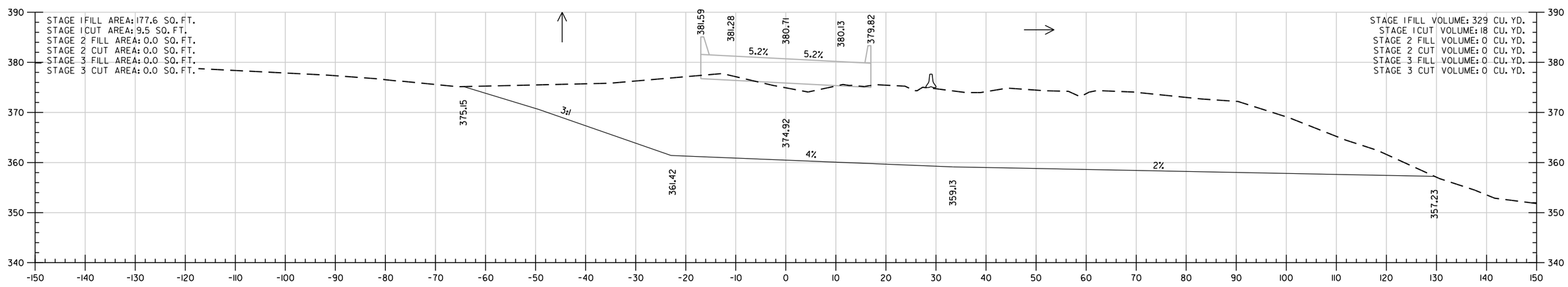

STA. 113+00.00

HWY. 283
STA. 113+00.00 TO STA. 113+19.79

5/22/2024
2:47:05 PM
...\Road_Sheets\CX\r061741_CX.dgn

DATE REVISED	DATE REVISED	FED.RD. DIST.NO.	STATE	JOB NO.	SHEET NO.	TOTAL SHEETS
		6	ARK.	061741	115	136
		CROSS SECTIONS				

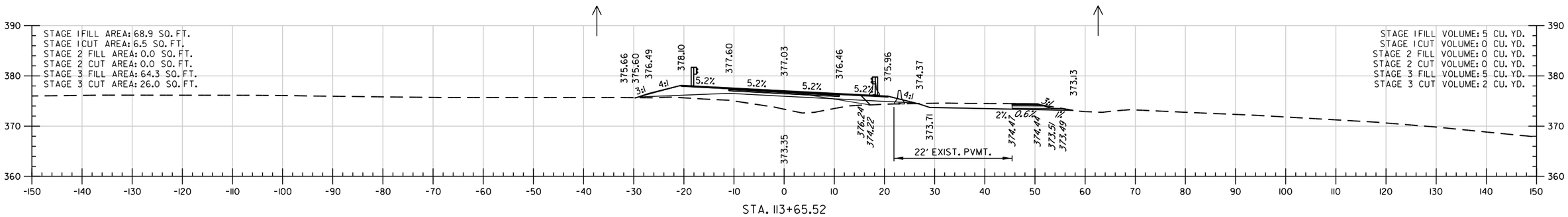

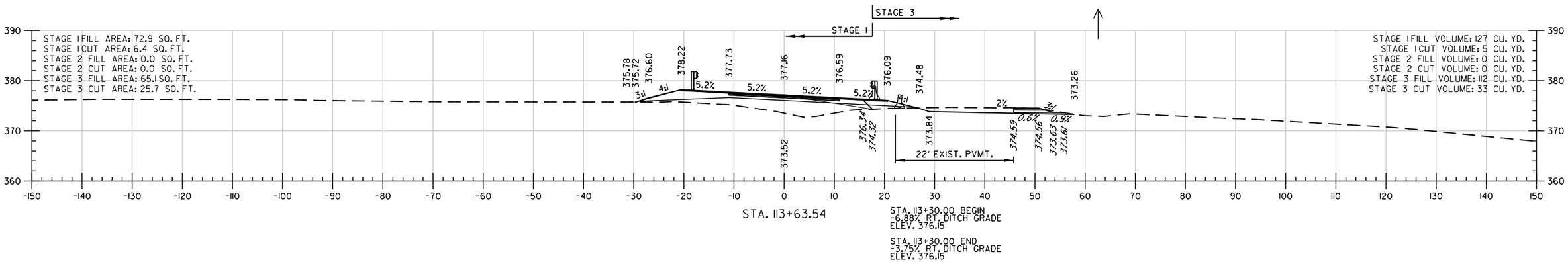

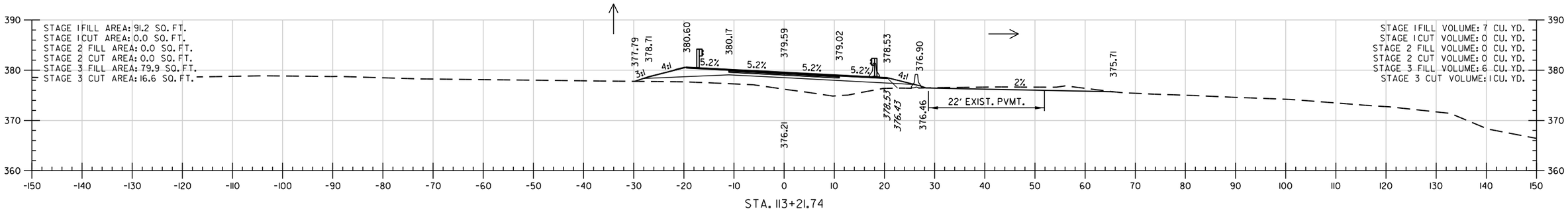

HWY. 283
STA. 113+21.74 TO STA. 113+65.52

5/2/2024
2:47:06 PM
...\Road_Sheets\CX\r061741_CX.dgn

DATE REVISED	DATE REVISED	FED.RD. DIST.NO.	STATE	JOB NO.	SHEET NO.	TOTAL SHEETS
		6	ARK.	061741	116	136
		CROSS SECTIONS				

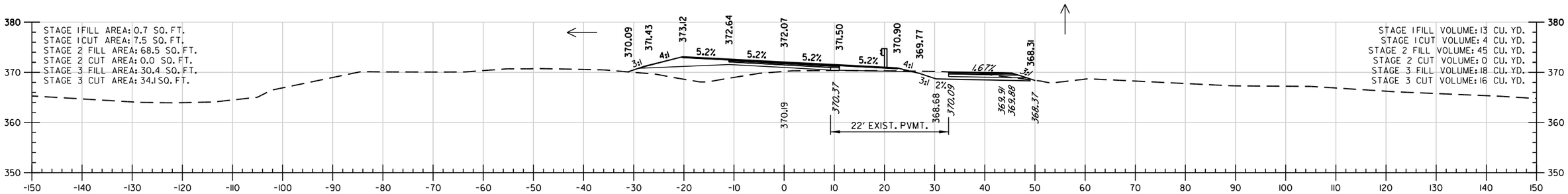

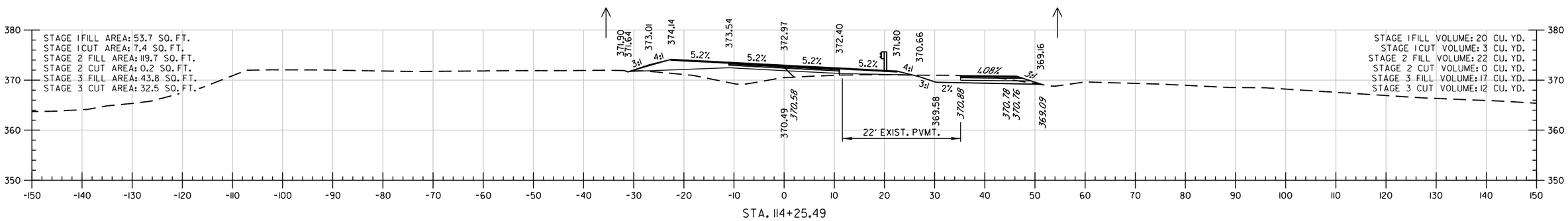

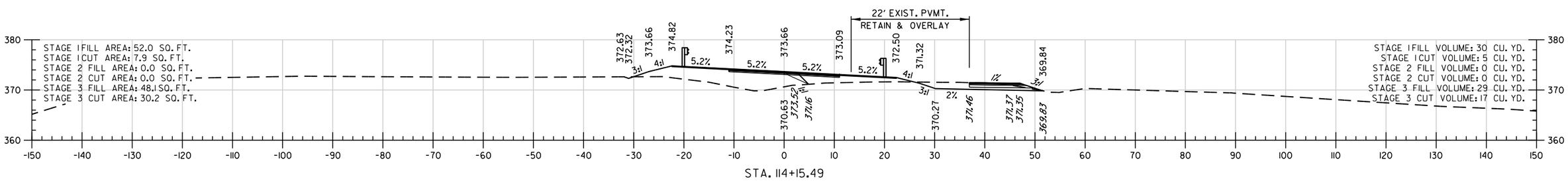

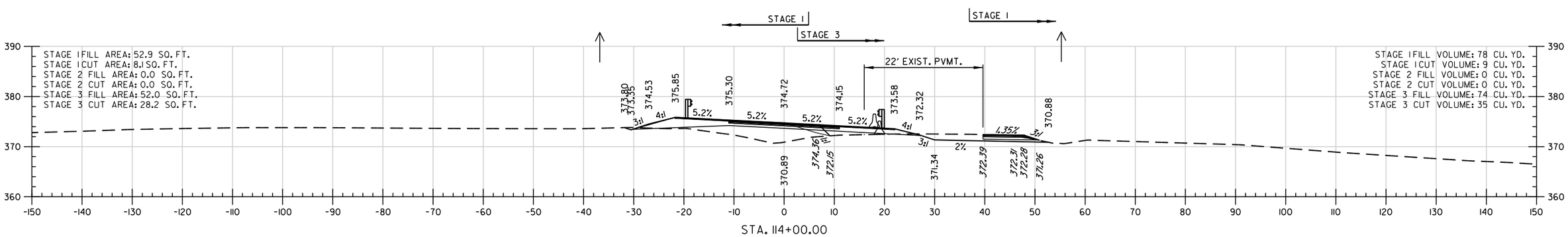

HWY. 283
STA. 114+00.00 TO STA. 114+38.54

5/2/2024
2:47:06 PM
...\Road_Sheets\CX\r061741_CX.dgn

DATE REVISED	DATE REVISED	FED.RD. DIST.NO.	STATE	JOB NO.	SHEET NO.	TOTAL SHEETS
		6	ARK.	061741	117	136
		CROSS SECTIONS				

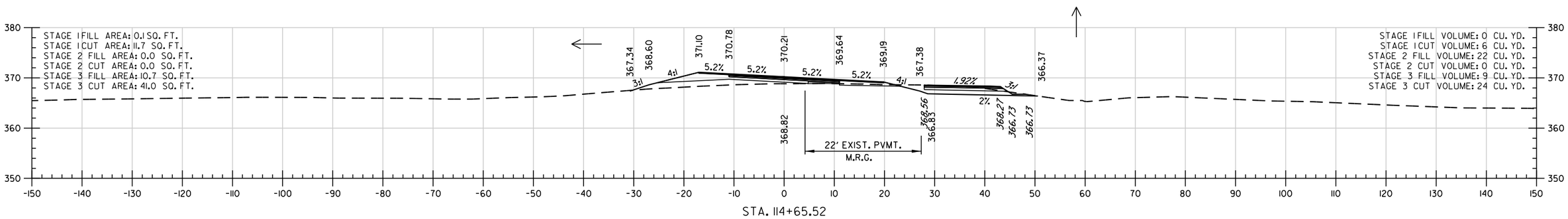

STA. 114+65.52

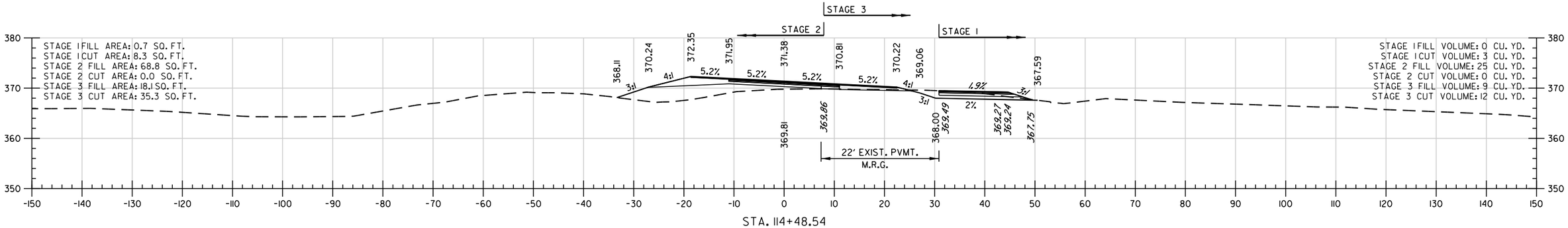

STA. 114+48.54

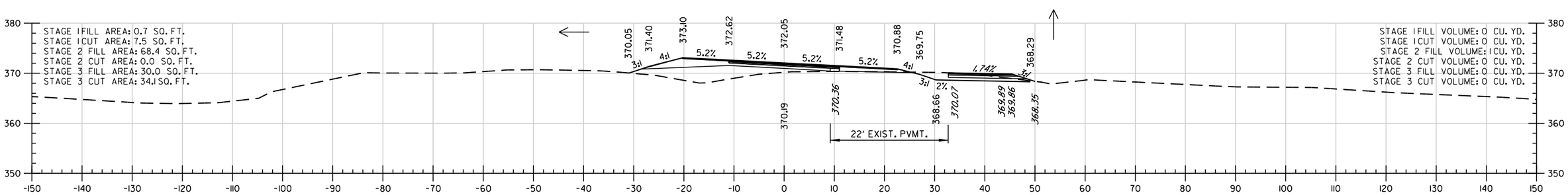

STA. 114+38.83

HWY. 283
STA. 114+38.83 TO STA. 114+65.52

5/2/2024
2:47:02 PM
...\Road_Sheets\CX\r061741_CX.dgn

DATE REVISED	DATE REVISED	FED.RD. DIST.NO.	STATE	JOB NO.	SHEET NO.	TOTAL SHEETS
		6	ARK.	061741	118	136
		CROSS SECTIONS				

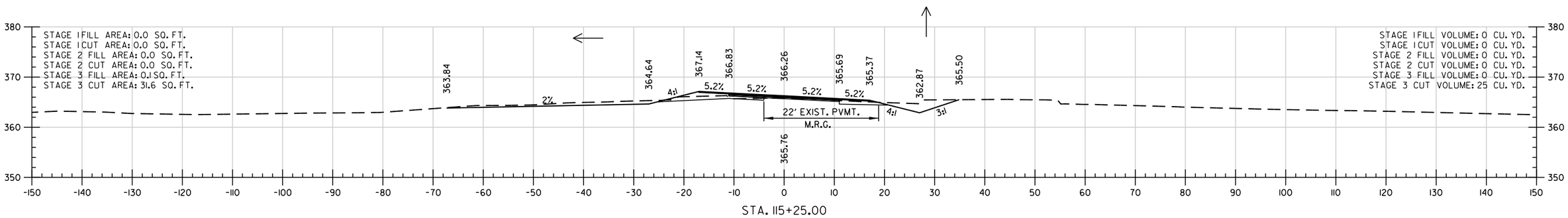

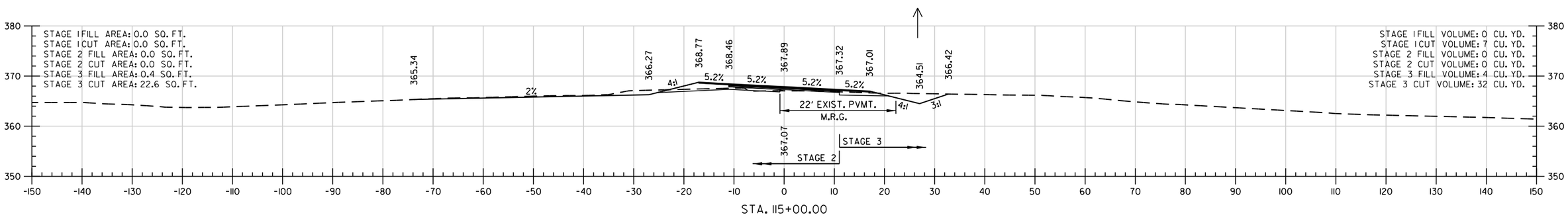

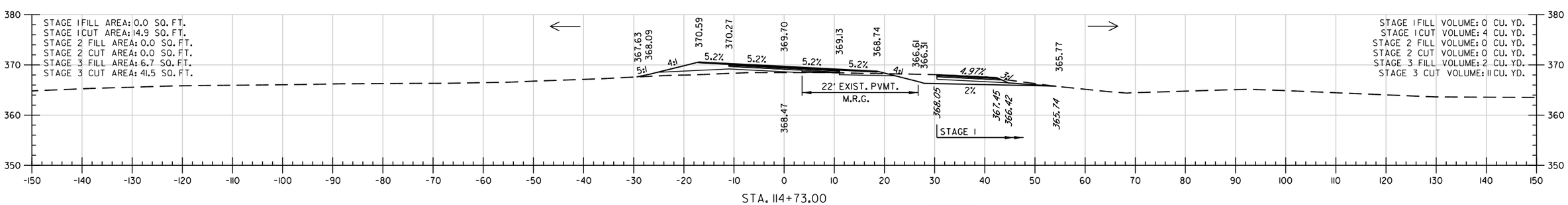

STA. 114+70.00 END
-6.88% RT. DITCH GRADE
ELEV. 366.52

HWY. 283
STA. 114+73.00 TO STA. 115+25.00

5/2/2024
2:47:07 PM
...\Road_Sheets\CX\r061741_CX.dgn

DATE REVISED	DATE REVISED	FED.RD. DIST.NO.	STATE	JOB NO.	SHEET NO.	TOTAL SHEETS
		6	ARK.	061741	119	136
		CROSS SECTIONS				

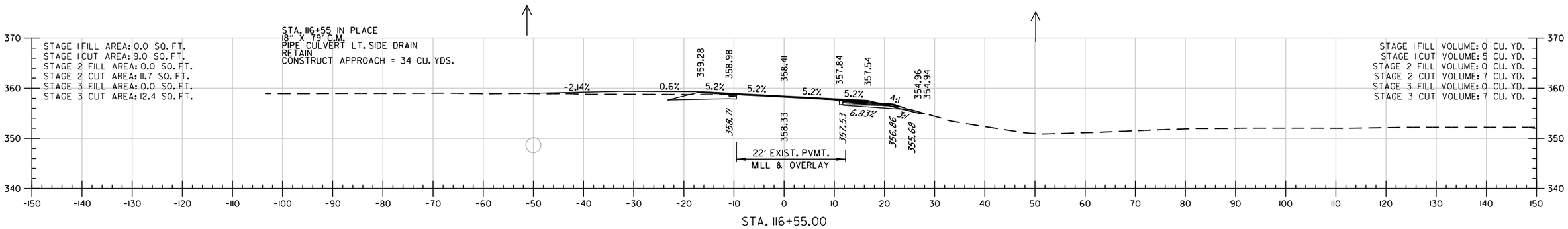

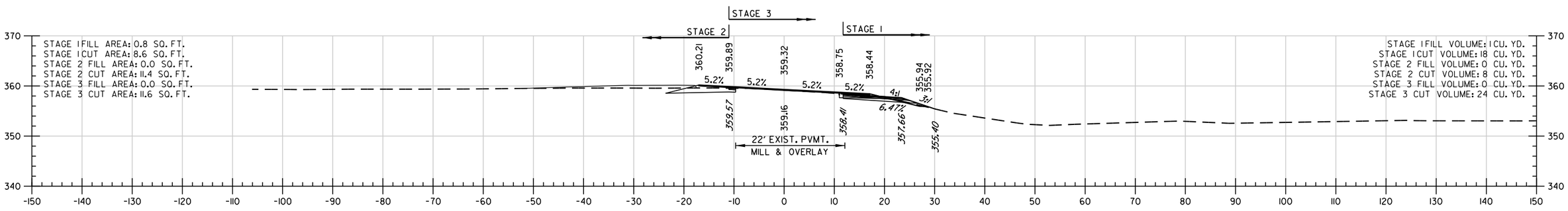

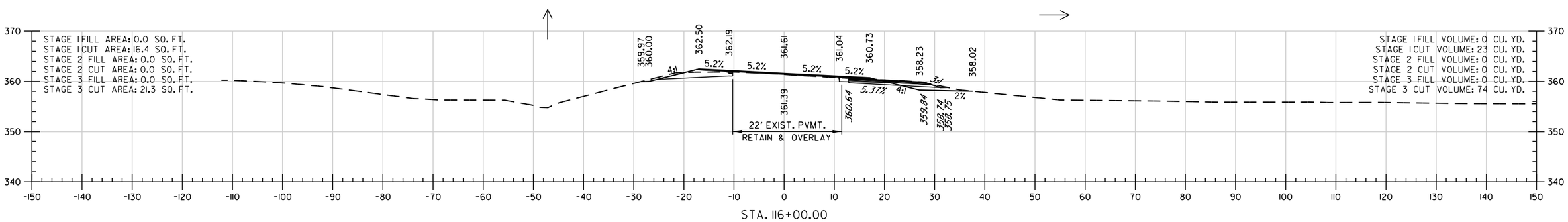

HWY. 283
STA. 116+00.00 TO STA. 116+55.00

5/2/2024
2:47:07 PM
...\Road_Sheets\CX\r061741_CX.dgn

DATE REVISED	DATE REVISED	FED.RD. DIST.NO.	STATE	JOB NO.	SHEET NO.	TOTAL SHEETS
		6	ARK.	061741	120	136
		CROSS SECTIONS				

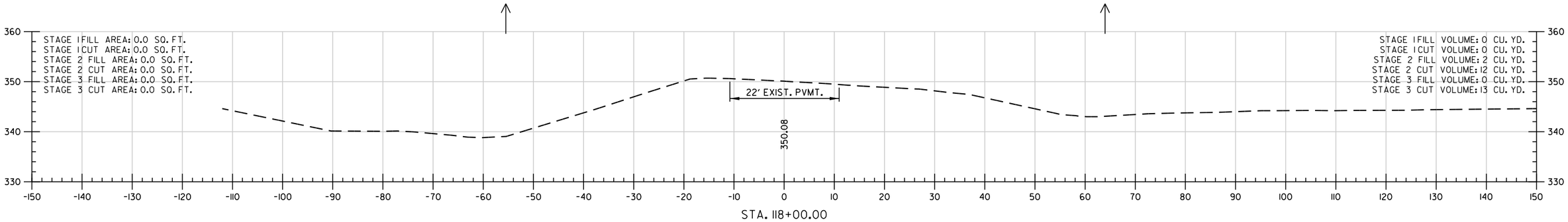

STA. 118+00.00

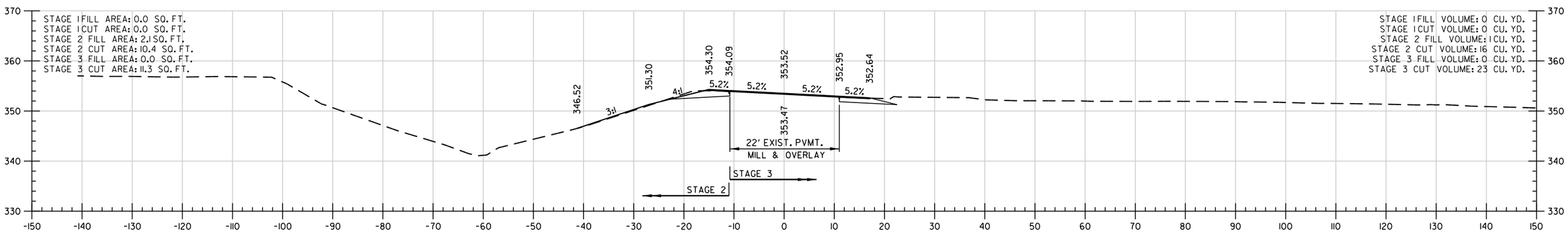

STA. 117+39.26

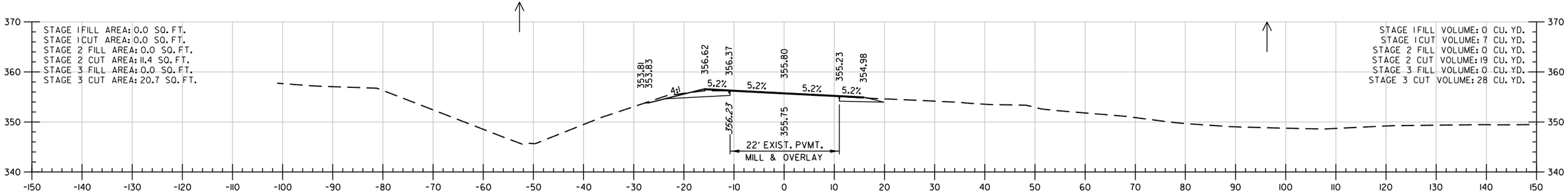

STA. 117+00.00

HWY. 283
STA. 117+00.00 TO STA. 118+00.00

5/2/2024
2:47:07 PM
...\Road_Sheets\CX\r061741_CX.dgn

DATE REVISED	DATE REVISED	FED.RD. DIST.NO.	STATE	JOB NO.	SHEET NO.	TOTAL SHEETS
		6	ARK.	061741	121	136
		CROSS SECTIONS				

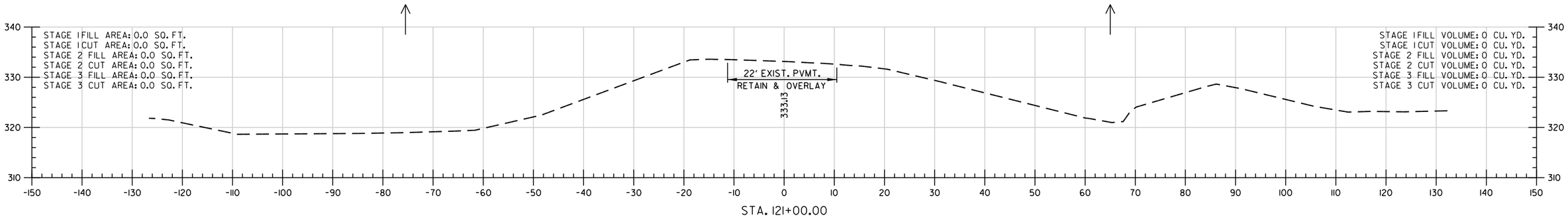

STA. 121+00.00

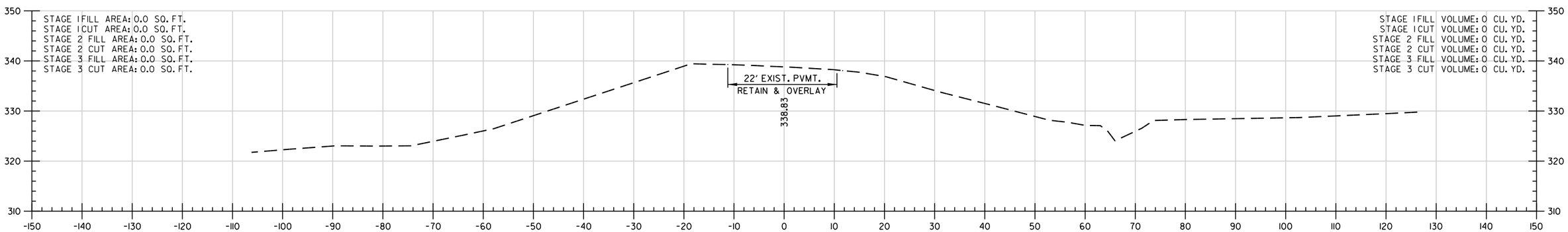

STA. 120+00.00

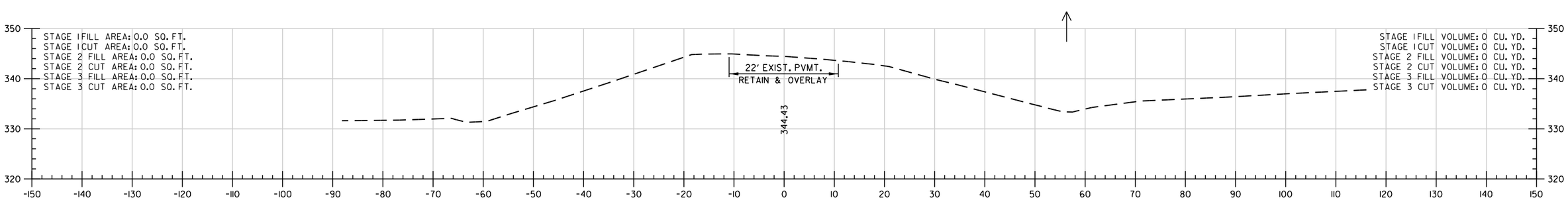

STA. 119+00.00

HWY. 283
STA. 119+00.00 TO STA. 121+00.00

5/2/2024
2:47:07 PM
...\Road_Sheets\CX\r061741_CX.dgn

DATE REVISED	DATE REVISED	FED.RD. DIST.NO.	STATE	JOB NO.	SHEET NO.	TOTAL SHEETS
		6	ARK.	061741	122	136
		CROSS SECTIONS				

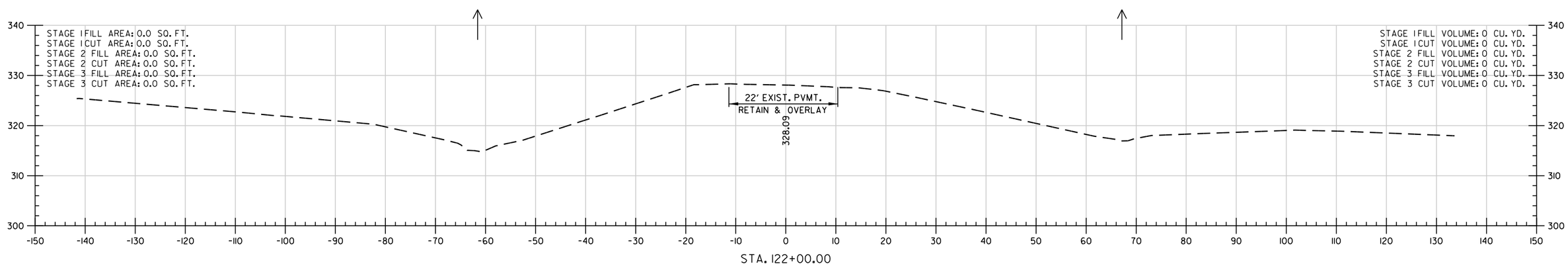

HWY. 283
STA. 122+00.00 TO STA. 122+00.00

5/2/2024
2:47:08 PM
...\Rood_Sheets\CX\r061741_CX.dgn

DATE REVISED	DATE REVISED	FED.RD. DIST.NO.	STATE	JOB NO.	SHEET NO.	TOTAL SHEETS
		6	ARK.	061741	123	136
		CROSS SECTIONS				

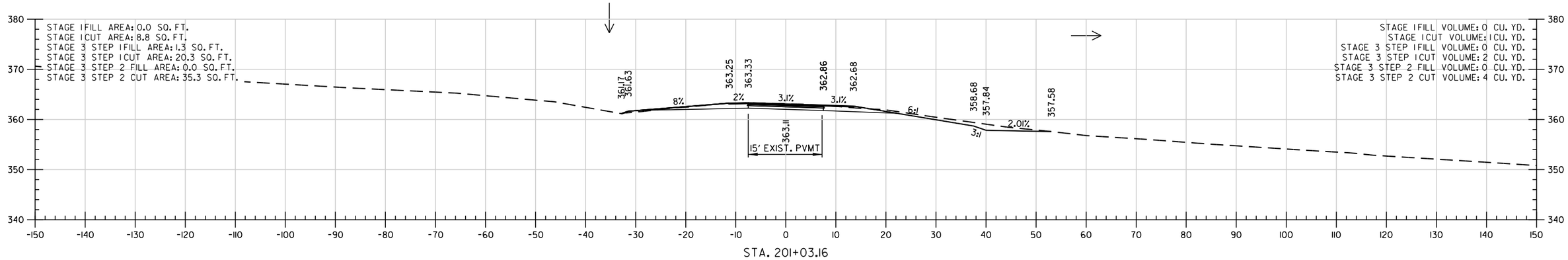

STA. 201+03.16

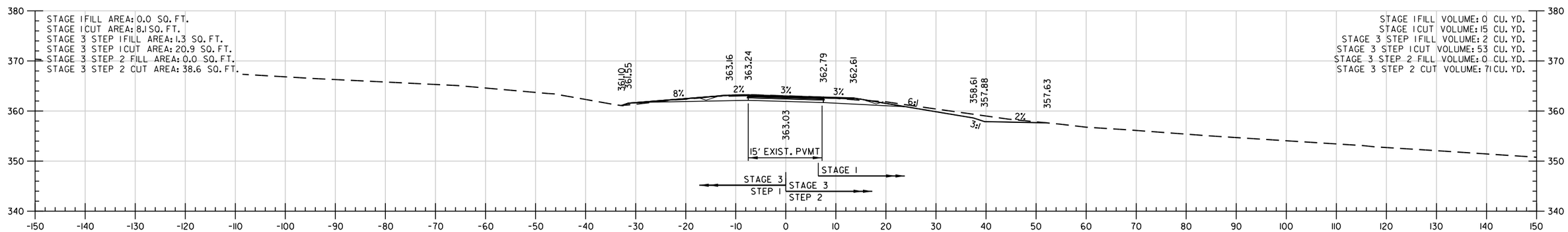

STA. 201+00.00
BEGIN CONSTRUCTION RAMP 1

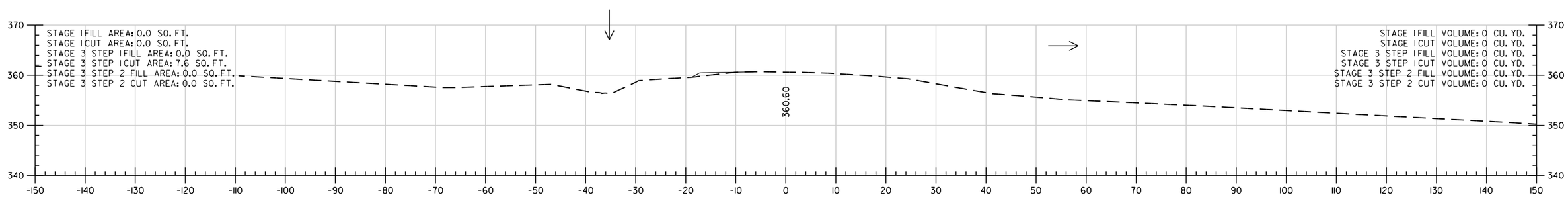

STA. 200+00.00

RAMP 1
STA. 200+00.00 TO STA. 201+13.40

5/2/2024
2:47:08 PM
...\Road_Sheets\CX\r061741_CX.dgn

DATE REVISED	DATE REVISED	FED.RD. DIST.NO.	STATE	JOB NO.	SHEET NO.	TOTAL SHEETS
		6	ARK.	061741	124	136
		CROSS SECTIONS				

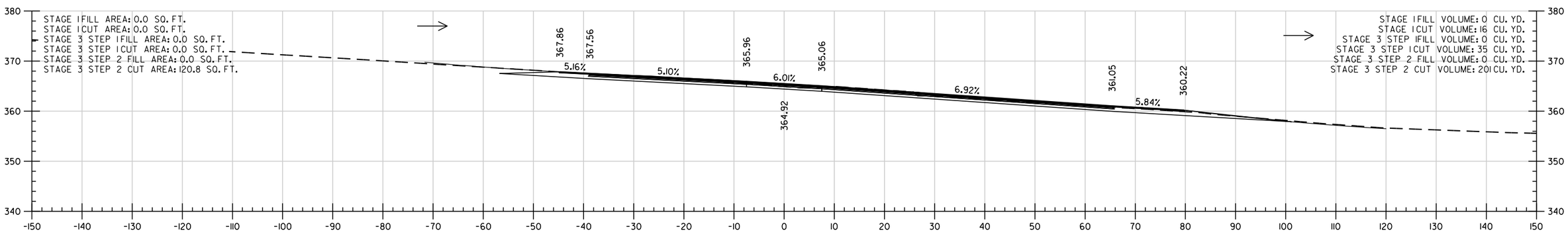

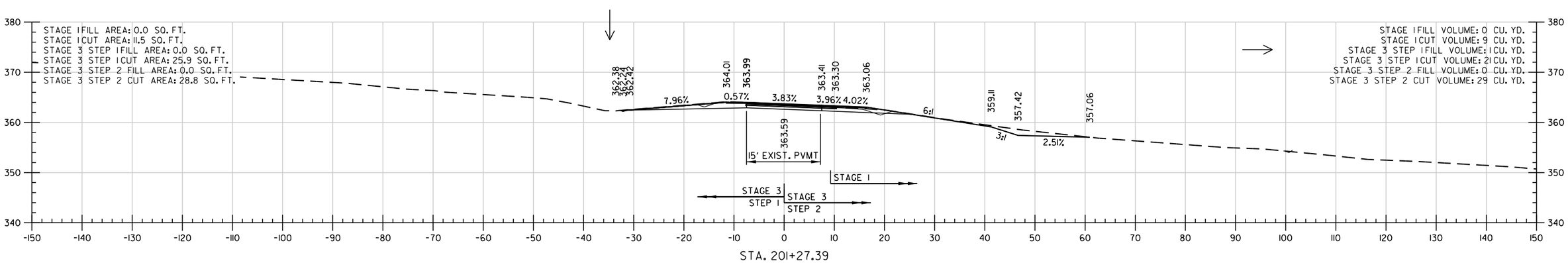

RAMP I
STA. 201+27.39 TO STA. 202+00.00

5/2/2024
2:47:08 PM
...\Road_Sheets\CX\r061741_CX.dgn

DATE REVISED	DATE REVISED	FED.RD. DIST.NO.	STATE	JOB NO.	SHEET NO.	TOTAL SHEETS
		6	ARK.	061741	125	136
		CROSS SECTIONS				

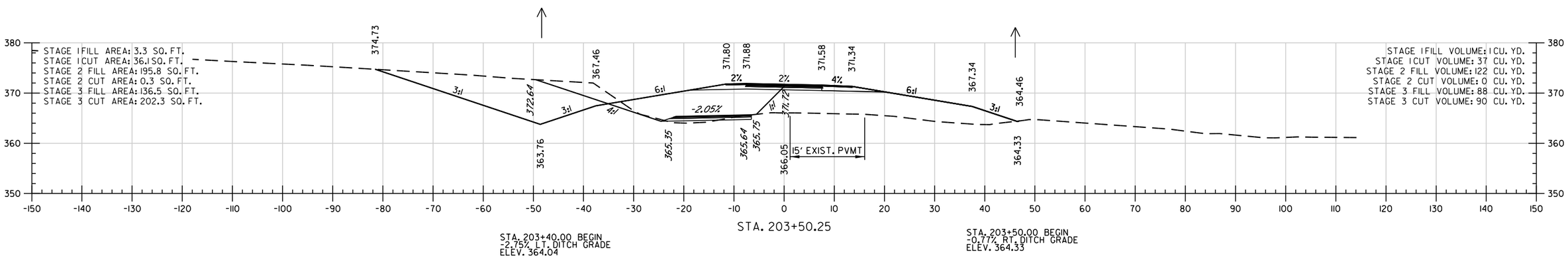

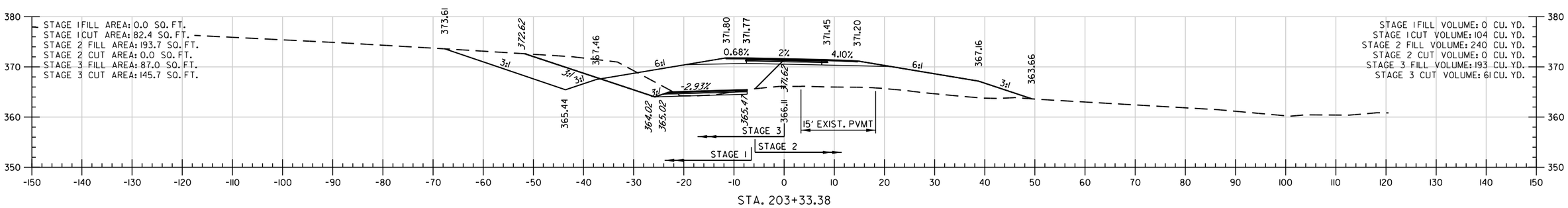

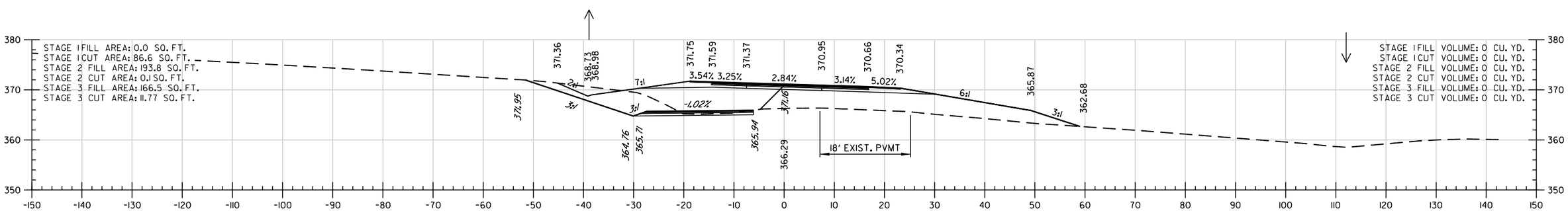

RAMP 2
STA. 203+00.00 TO STA. 203+50.25

5/2/2024
2:47:08 PM
...\Rood_Sheets\CX\r061741_CX.dgn

DATE REVISED	DATE REVISED	FED.RD. DIST.NO.	STATE	JOB NO.	SHEET NO.	TOTAL SHEETS
		6	ARK.	061741	126	136
		CROSS SECTIONS				

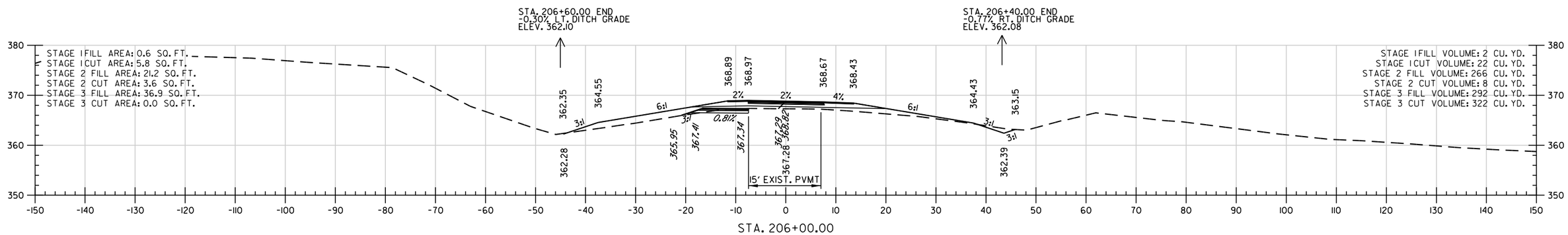

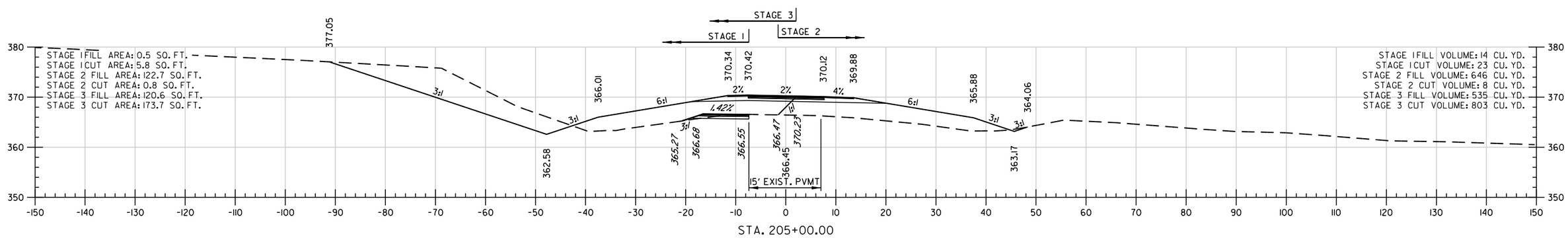

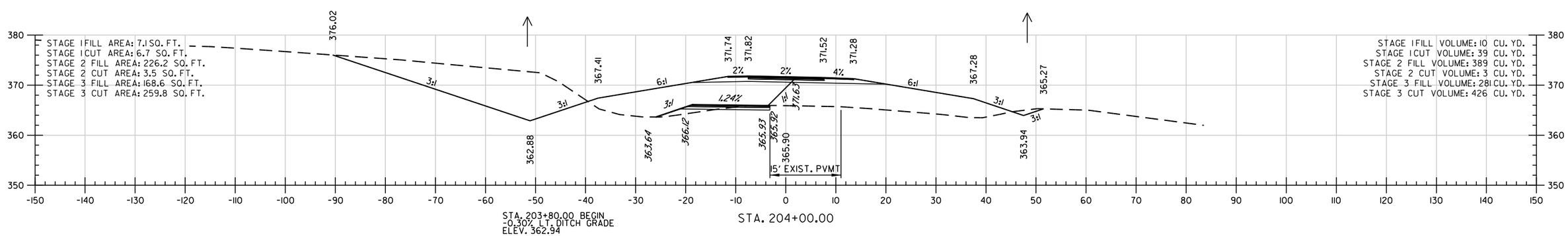

STA. 203+80.00 BEGIN
-0.30% LT. DITCH GRADE
ELEV. 362.94

STA. 203+80.00 END
-2.75% LT. DITCH GRADE
ELEV. 362.94

RAMP 2
STA. 204+00.00 TO STA. 206+00.00

5/2/2024
2:47:24 PM
...\Road.Sheets\CX\r061741_CX.dgn

DATE REVISED	DATE REVISED	FED.RD. DIST.NO.	STATE	JOB NO.	SHEET NO.	TOTAL SHEETS
		6	ARK.	061741	127	136
		CROSS SECTIONS				

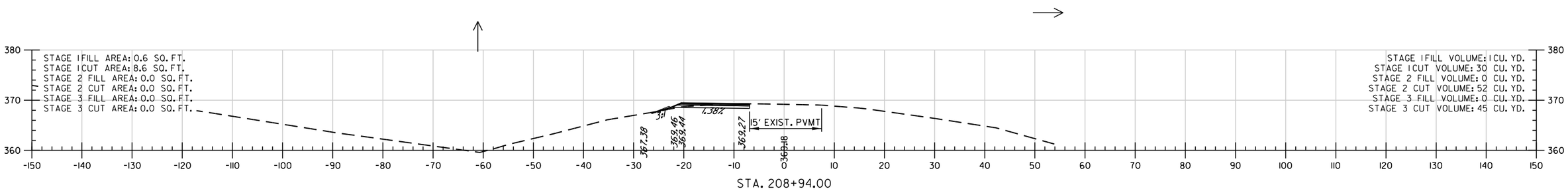

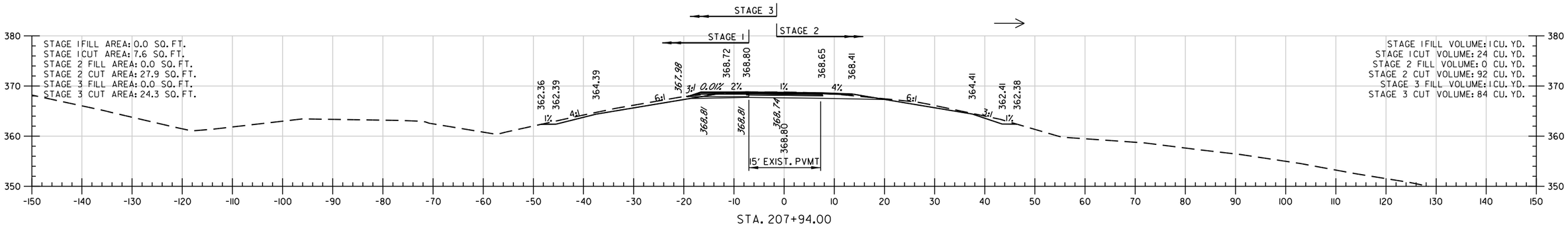

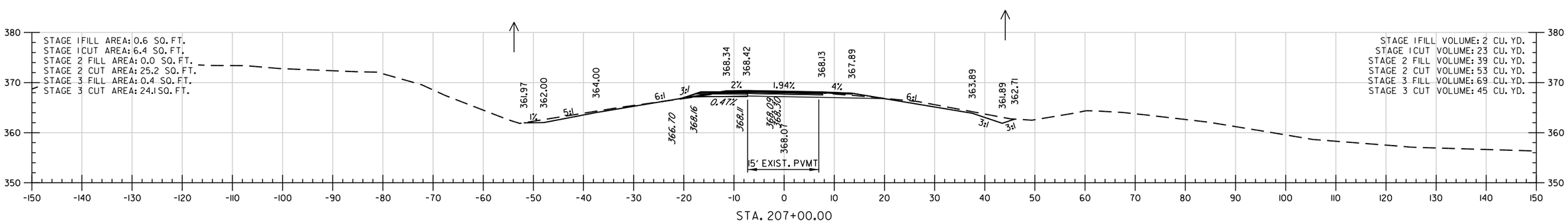

RAMP 2
STA. 207+00.00 TO STA. 208+94.00

5/7/2024
2:47:25 PM
...\Road_Sheets\CX\r061741_CX.dgn

DATE REVISED	DATE REVISED	FED.RD. DIST.NO.	STATE	JOB NO.	SHEET NO.	TOTAL SHEETS
		6	ARK.	061741	128	136
		CROSS SECTIONS				

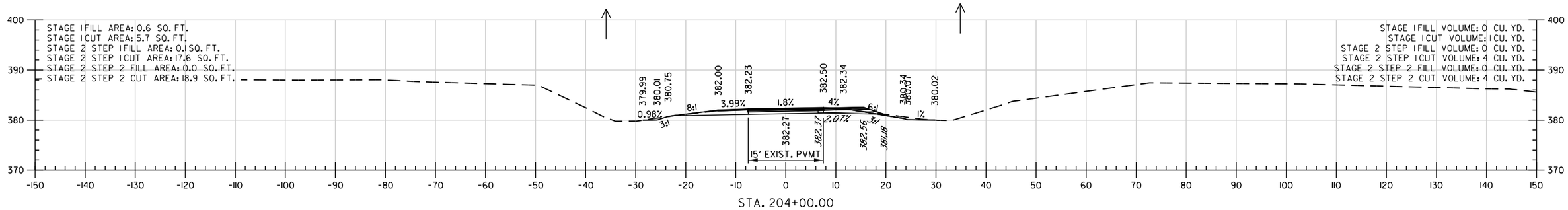

STA. 204+00.00

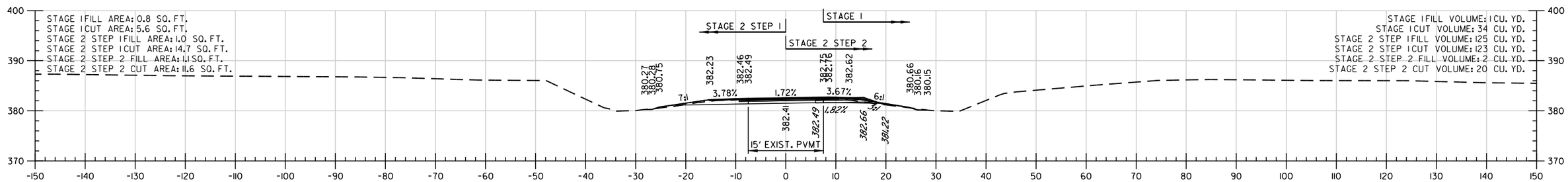

STA. 203+93.33

STA. 203+75.00 BEGIN
-1.11% LT. DITCH GRADE
ELEV. 380.29

STA. 203+40.00 BEGIN
-0.37% RT. DITCH GRADE
ELEV. 380.29

STA. 203+75.00 END
1.30% LT. DITCH GRADE
ELEV. 380.29

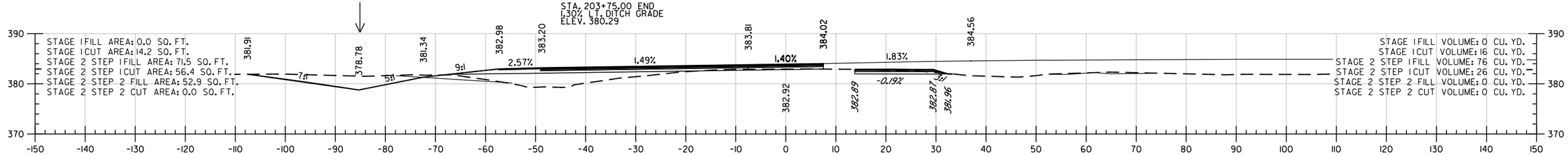

STA. 203+00.00

STA. 202+98.22 BEGIN
1.30% LT. DITCH GRADE
ELEV. 379.29

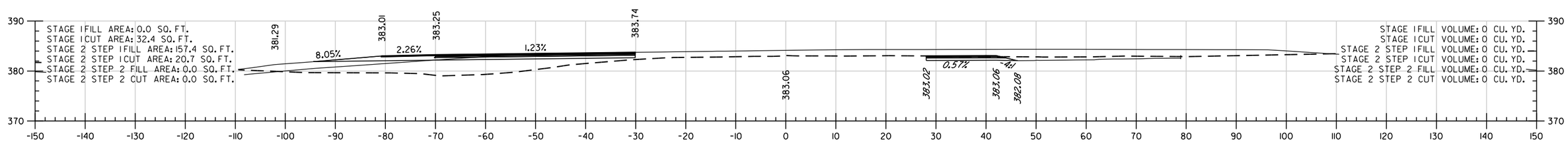

STA. 202+82.00
BEGIN CONSTRUCTION RAMP 3

RAMP 3
STA. 202+82.00 TO STA. 204+00.00

5/2/2024
2:47:25 PM
...\Road_Sheets\CX\r061741_CX.dgn

DATE REVISED	DATE REVISED	FED.RD. DIST.NO.	STATE	JOB NO.	SHEET NO.	TOTAL SHEETS
		6	ARK.	061741	129	136
		CROSS SECTIONS				

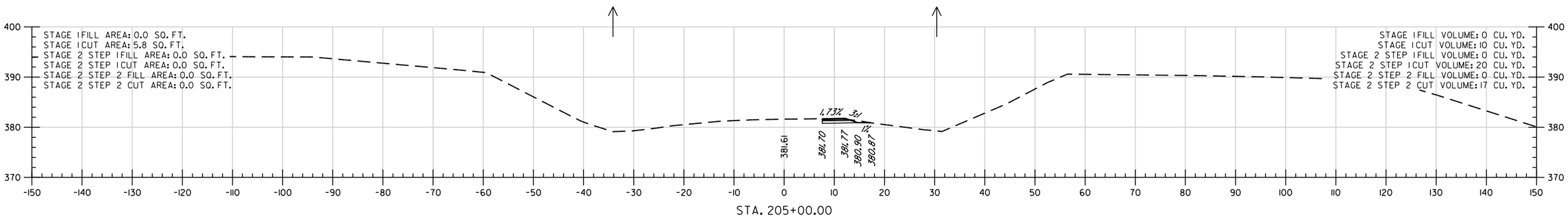

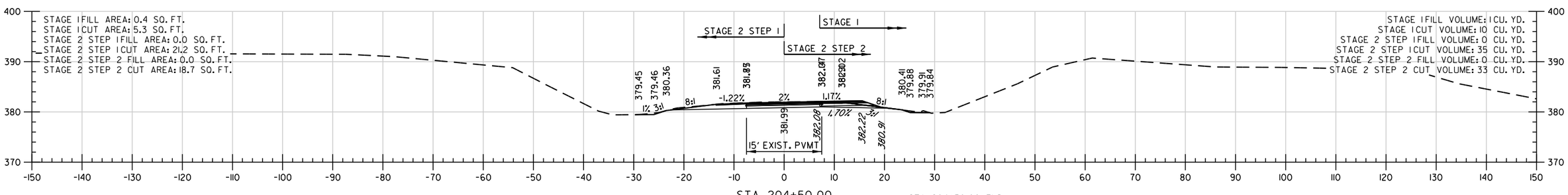

STA. 204+50.00 END
-1.11% LT. DITCH GRADE
ELEV. 379.46

STA. 204+50.00 END
-0.37% RT. DITCH GRADE
ELEV. 379.88

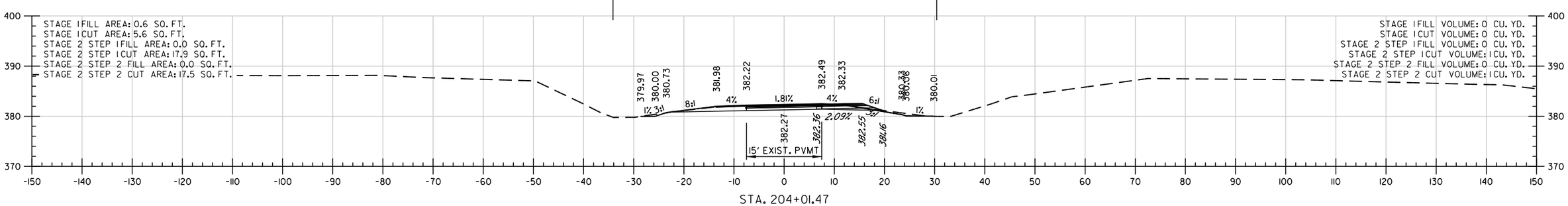

RAMP 3
STA. 204+01.47 TO STA. 205+00.00

5/2/2024
2:47:25 PM
...\Road_Sheets\CX\r061741_CX.dgn

DATE REVISED	DATE REVISED	FED.RD. DIST.NO.	STATE	JOB NO.	SHEET NO.	TOTAL SHEETS
		6	ARK.	061741	130	136
		CROSS SECTIONS				

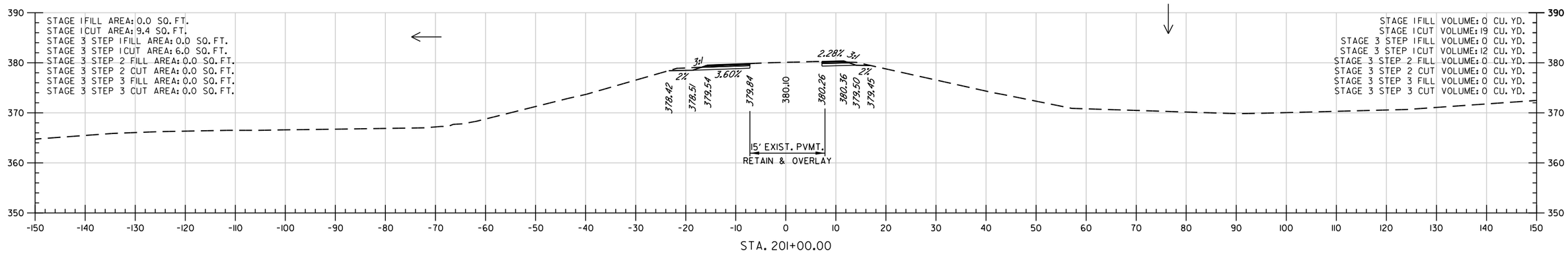

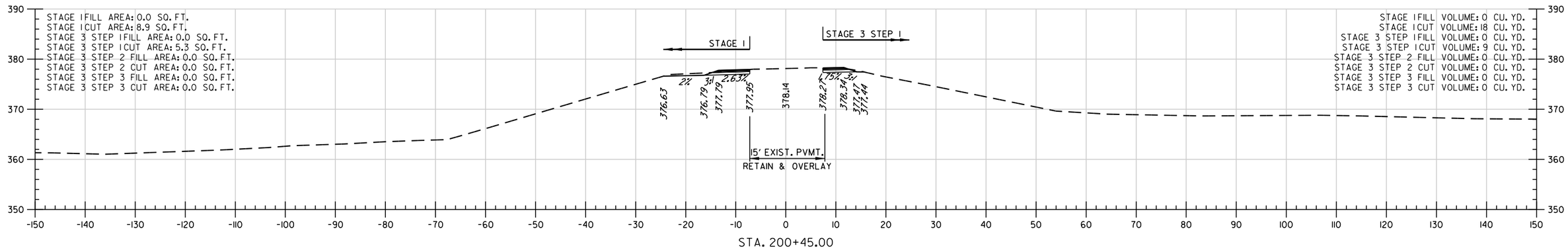

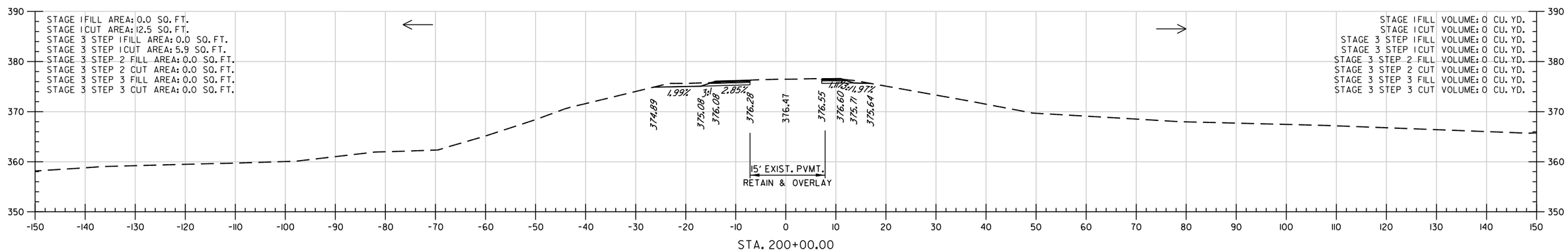

RAMP 4
STA. 200+00.00 TO STA. 201+00.00

5/2/2024
2:41:25 PM
...\Road\Sheets\CX\r061741_CX.dgn

DATE REVISED	DATE REVISED	FED.RD. DIST.NO.	STATE	JOB NO.	SHEET NO.	TOTAL SHEETS
		6	ARK.	061741	131	136
		CROSS SECTIONS				

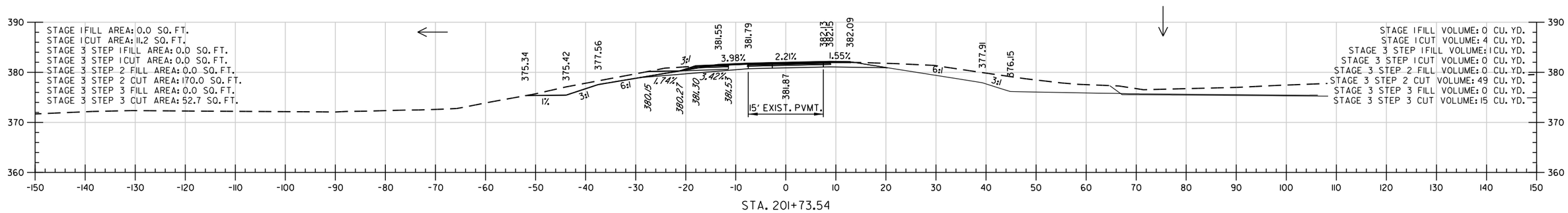

STA. 201+73.54

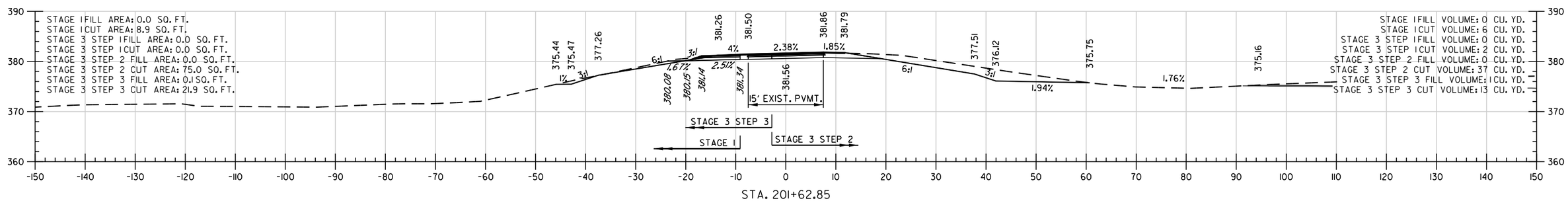

STA. 201+62.85

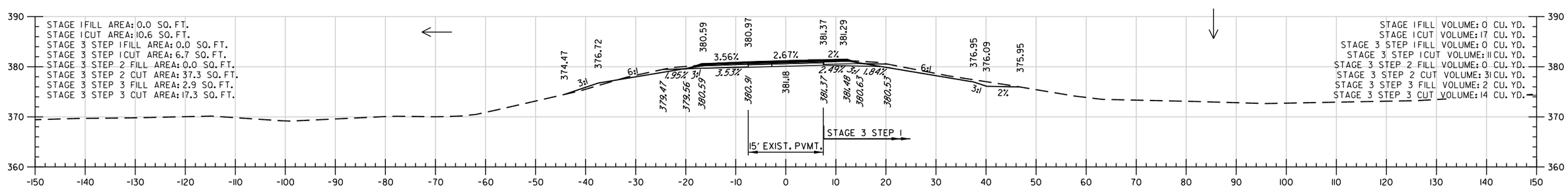

STA. 201+45.00
BEGIN CONSTRUCTION RAMP 4

RAMP 4
STA. 201+45.00 TO STA. 201+73.54

5/2/2024
2:47:26 PM
...\Road_Sheets\CX\r061741_CX.dgn

DATE REVISED	DATE REVISED	FED.RD. DIST.NO.	STATE	JOB NO.	SHEET NO.	TOTAL SHEETS
		6	ARK.	061741	132	136
		CROSS SECTIONS				

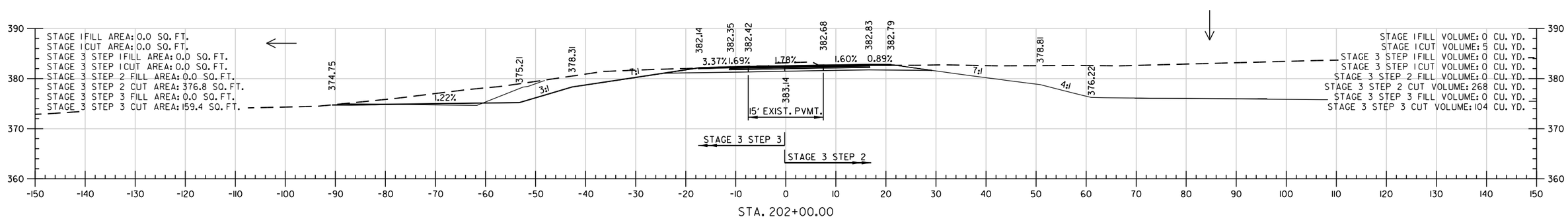

RAMP 4
STA. 202+00.00 TO STA. 202+00.00

5/2/2024
2:47:26 PM
...\Road_Sheets\CX\r061741_CX.dgn

DATE REVISED	DATE REVISED	FED.RD. DIST.NO.	STATE	JOB NO.	SHEET NO.	TOTAL SHEETS
		6	ARK.	061741	133	136
		CROSS SECTIONS				

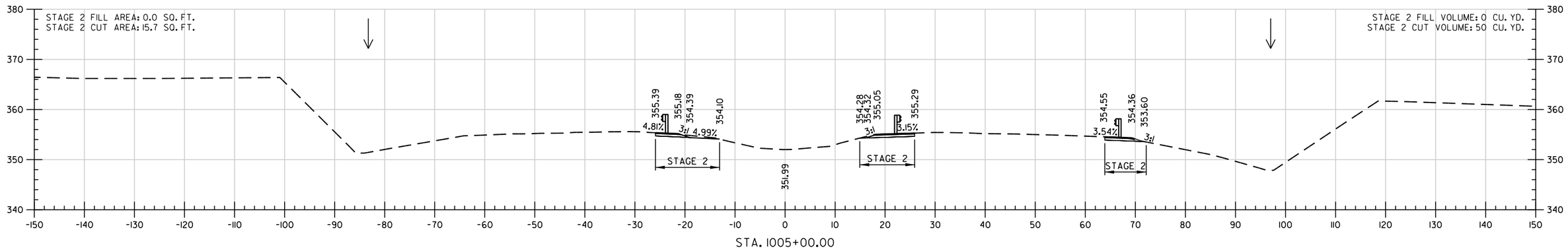

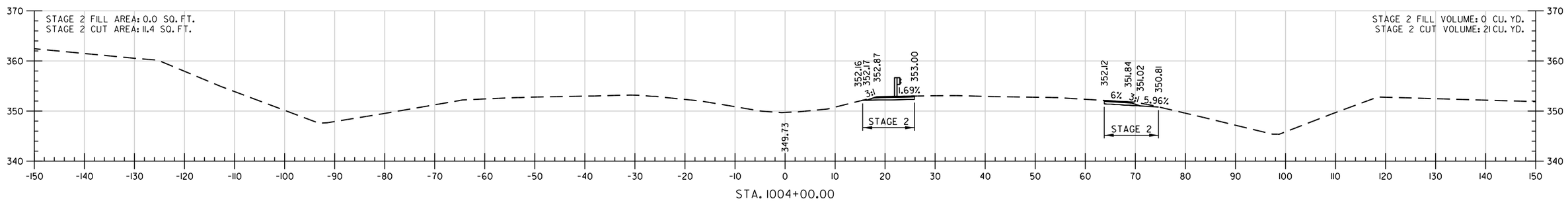

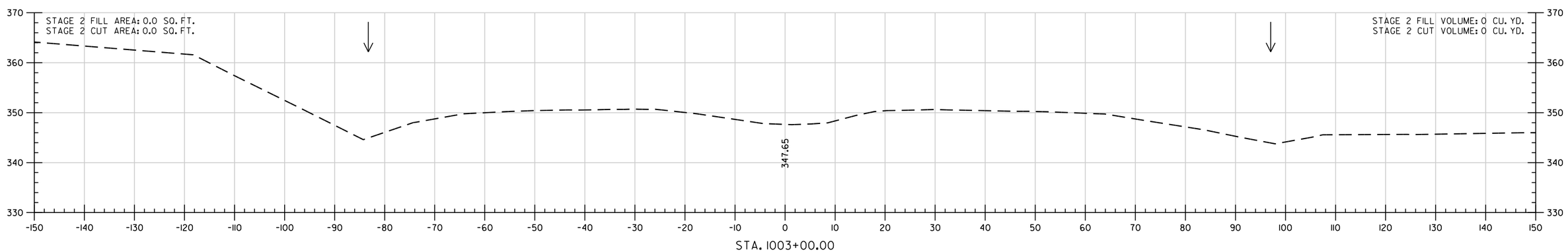

5/2/2024
3:16:52 PM
...\Road\Sheets\CX\r061741_CX.dgn

STA. 1003+00.00 TO STA. 1005+00.00

DATE REVISED	DATE REVISED	FED.RD. DIST.NO.	STATE	JOB NO.	SHEET NO.	TOTAL SHEETS
		6	ARK.	061741	134	136
		CROSS SECTIONS				

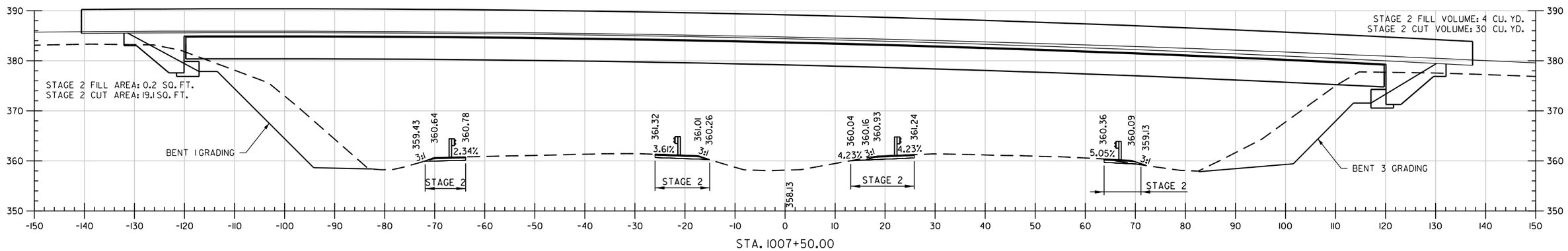

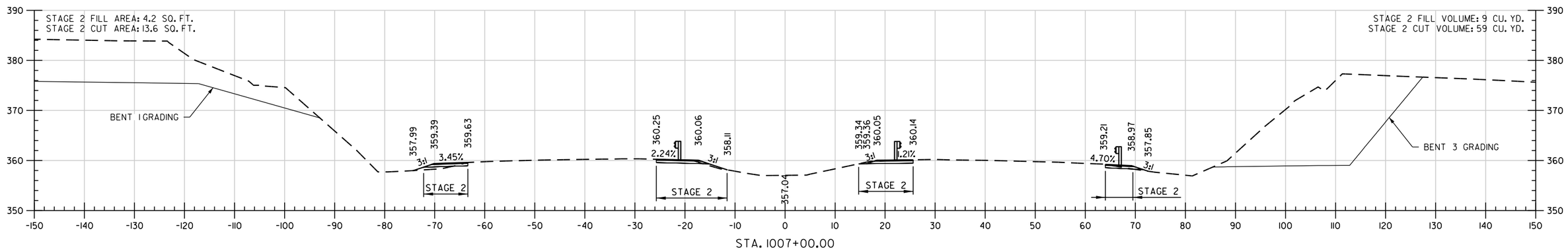

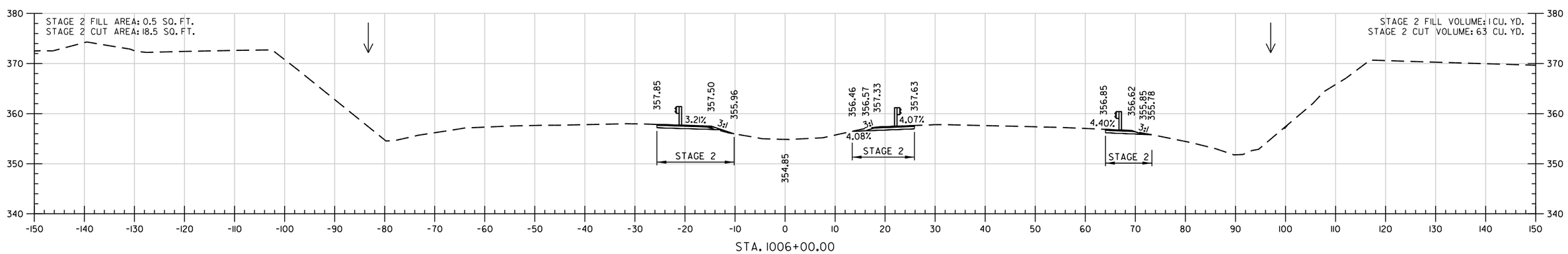

STA. 1006+00.00 TO STA. 1007+50.00

5/21/2024
2:47:26 PM
...\Road_Sheets\CX\r061741_CX.dgn

DATE REVISED	DATE REVISED	FED.RD. DIST.NO.	STATE	JOB NO.	SHEET NO.	TOTAL SHEETS
		6	ARK.	061741	135	136
		CROSS SECTIONS				

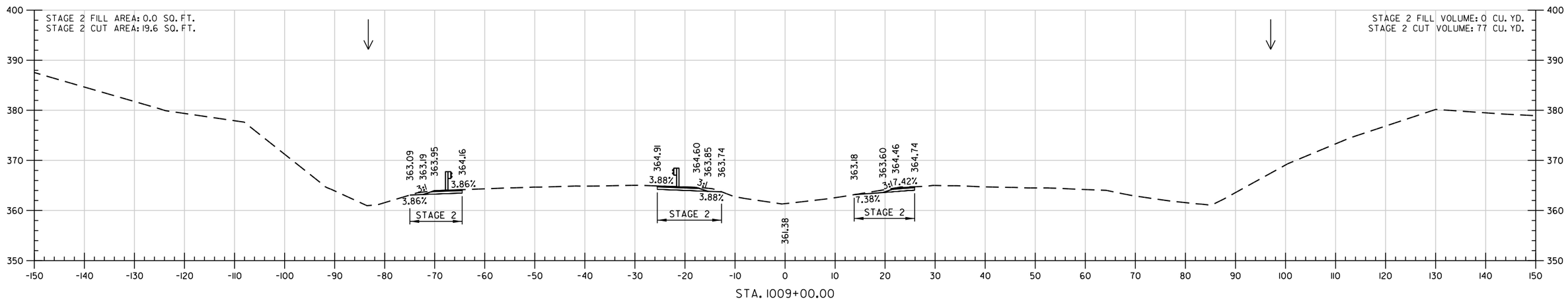

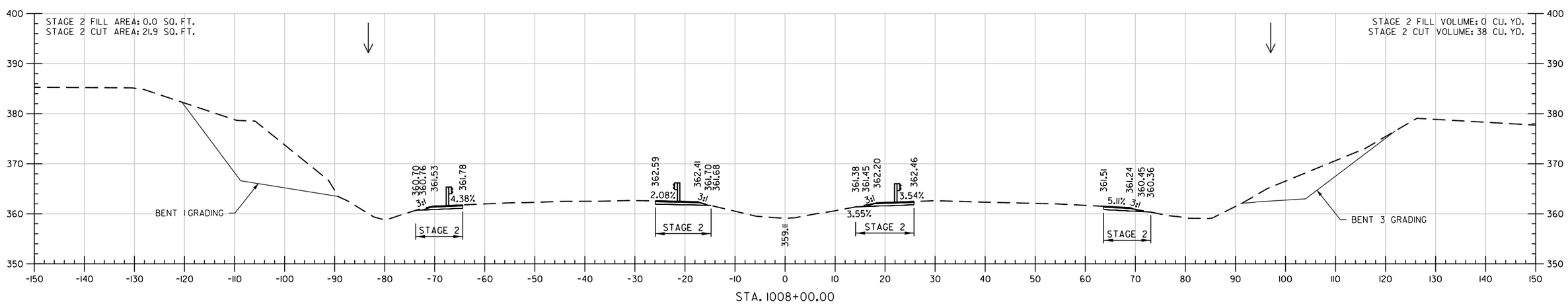

5/2/2024
2:47:27 PM
...\Road_Sheets\CX\r061741_CX.dgn

STA. 1008+00.00 TO STA. 1009+00.00

DATE REVISED	DATE REVISED	FED.RD. DIST.NO.	STATE	JOB NO.	SHEET NO.	TOTAL SHEETS
		6	ARK.	061741	136	136
		CROSS SECTIONS				

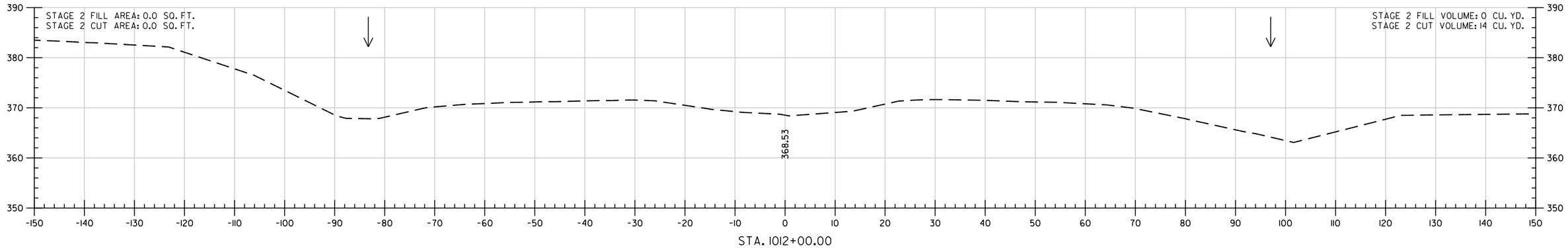

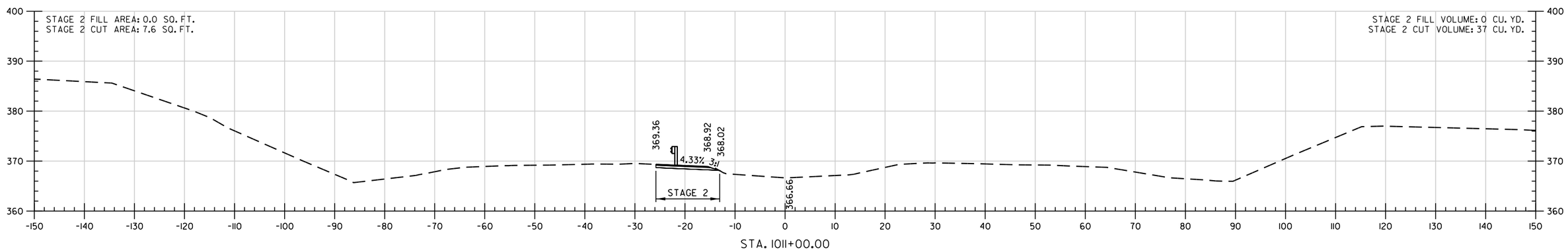

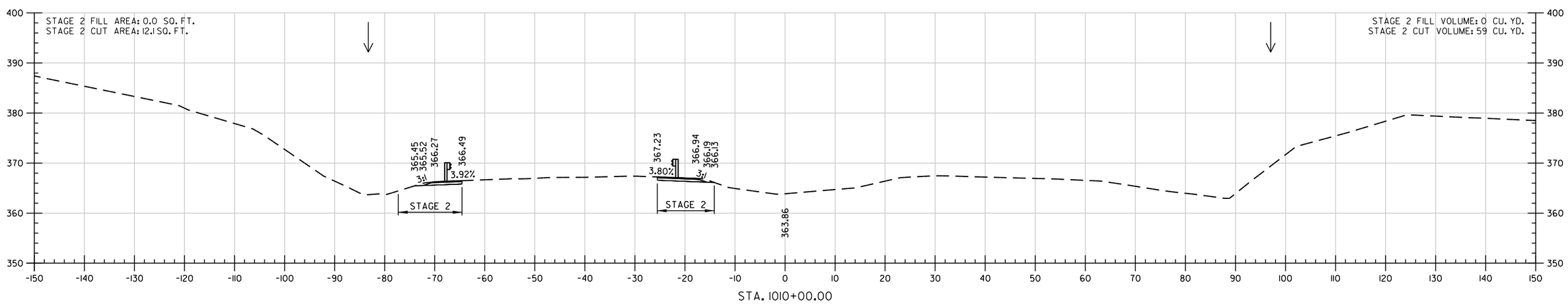

5/2/2024
2:42:27 PM
...\Road_Sheets\CX\r061741_CX.dgn

STA. 1010+00.00 TO STA. 1012+00.00

DATE REVISED	DATE FILMED	DATE REVISED	DATE FILMED	FED. ROAD DIST. NO.	STATE	FED. AID PROJ. NO.	SHEET NO.	TOTAL SHEETS
				6	ARK.			
				JOB NO.				
				1	EMBANKMENT & BACKFILL		55000	

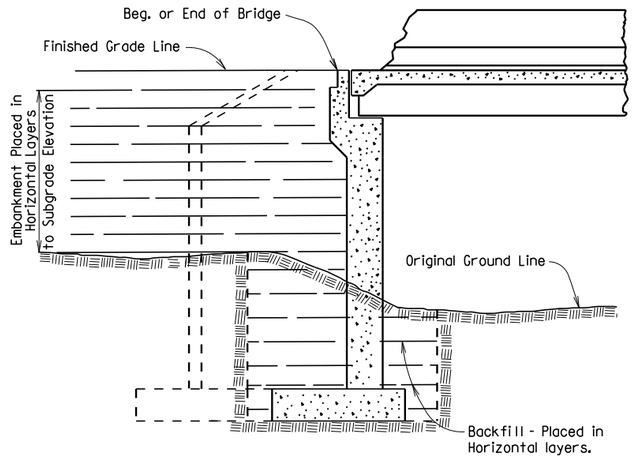

EMBANKMENT CONSTRUCTION AND FOOTING BACKFILL AT VERTICAL WALL ABUTMENTS

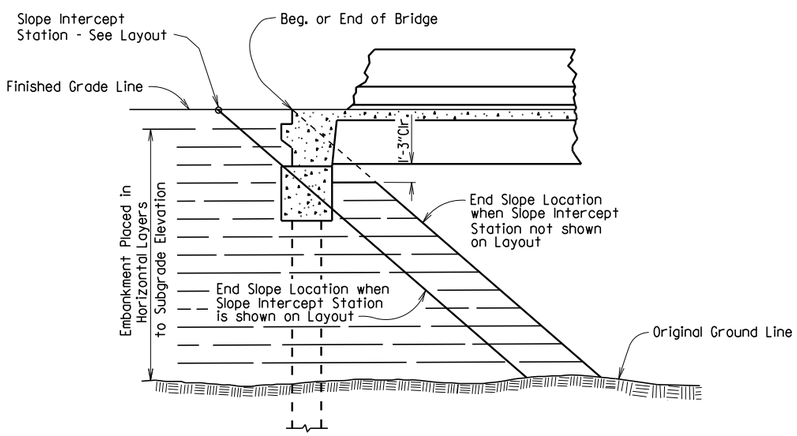

EMBANKMENT CONSTRUCTION AT SPILL-THROUGH PILE END BENTS

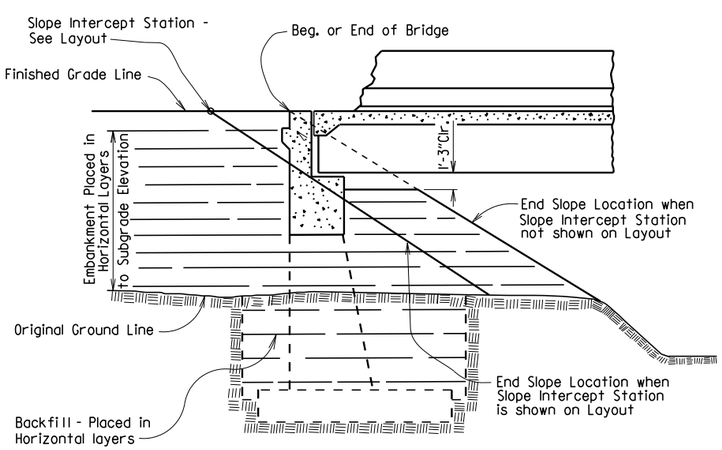

EMBANKMENT CONSTRUCTION AND FOOTING BACKFILL AT SPILL-THROUGH END BENTS

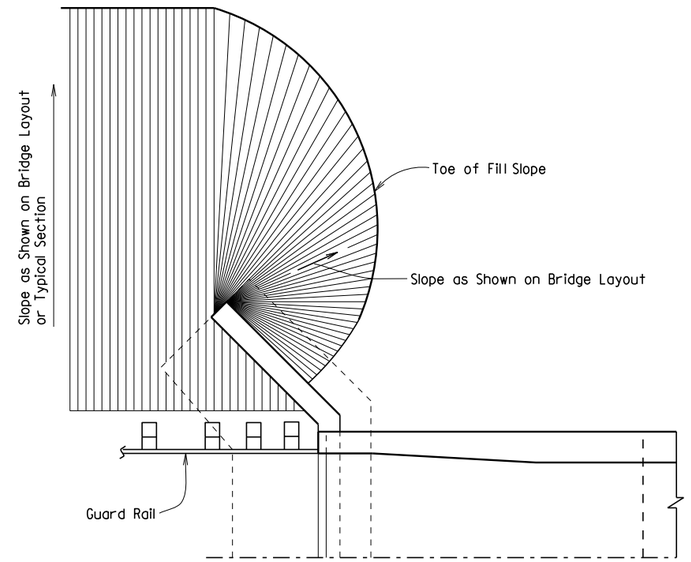

VERTICAL WALL ABUTMENTS

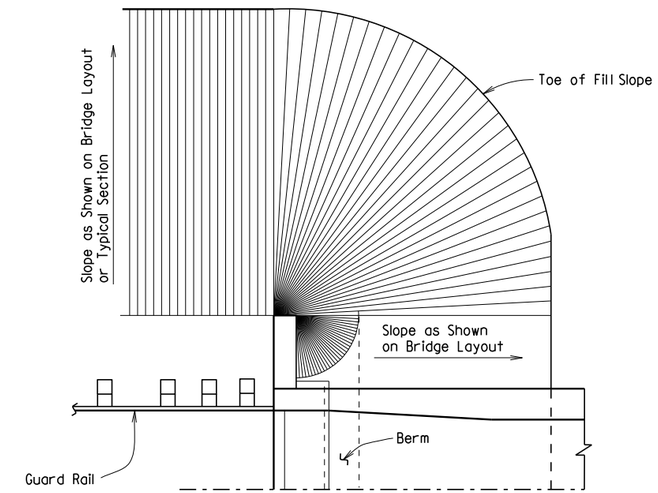

SPILL-THROUGH END BENTS WITH STUB WING

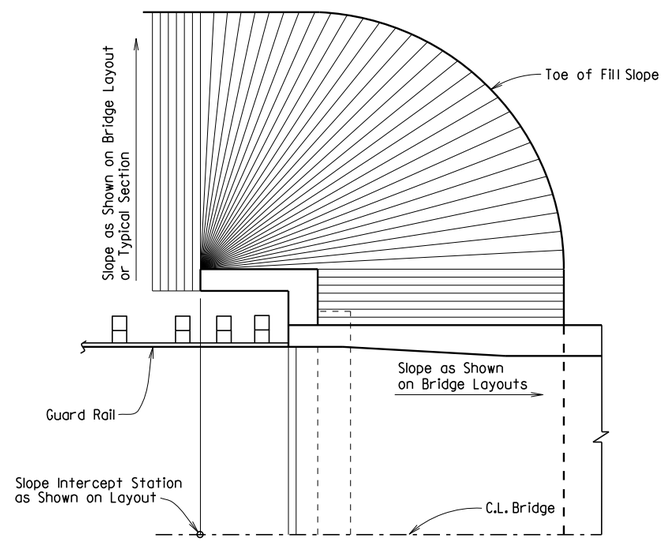

SPILL-THROUGH END BENTS WITH TURNBACK WING

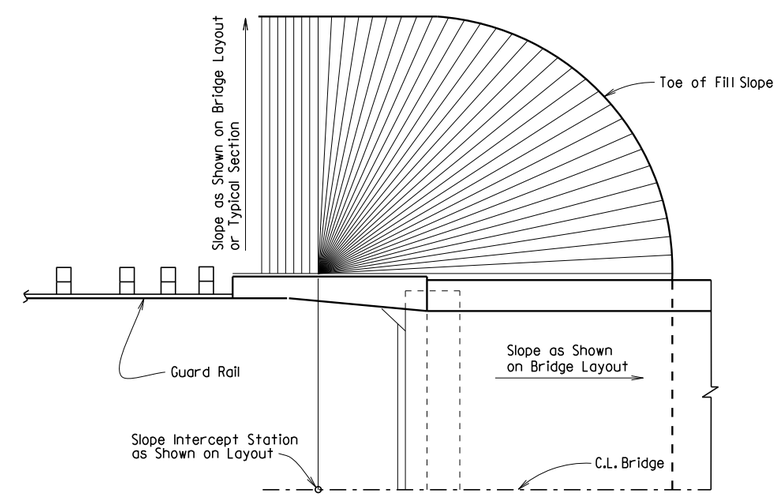

SPILL-THROUGH END BENTS WITH TRANSITION WING

METHOD OF DETERMINING FILL SLOPE LOCATION AT BRIDGE ENDS

GENERAL NOTES

The Bridge End Embankment shall be defined as a section of embankment, not less than 20 feet long adjacent to the bridge end, together with the side slopes and slopes under the bridge end including around the end of wingwalls. Embankment adjacent to structures shall be constructed in 6 inch horizontal layers (loose measure) and compacted by the use of mechanical equipment to the satisfaction of the Engineer. Refer to Subsections 210.09, 210.10 and 801.08 for construction requirements.

STANDARD DETAILS FOR EMBANKMENT CONSTRUCTION AND BACKFILL AT BRIDGE ENDS

ARKANSAS STATE HIGHWAY COMMISSION

LITTLE ROCK, ARK.

DRAWN BY:	KDH	DATE:	2-27-2014	FILENAME:	b55000.dgn
CHECKED BY:	BEF	DATE:	2-27-2014	SCALE:	NO SCALE
DESIGNED BY:	STD.	DATE:	-		

DRAWING NO. 55000

DATE REVISED	DATE FILMED	DATE REVISED	DATE FILMED	FED. ROAD DIST. NO.	STATE	FED. AID PROJ. NO.	SHEET NO.	TOTAL SHEETS
				6	ARK.			
				JOB NO.				
				1	RIPRAP & EXCAV. 55001			

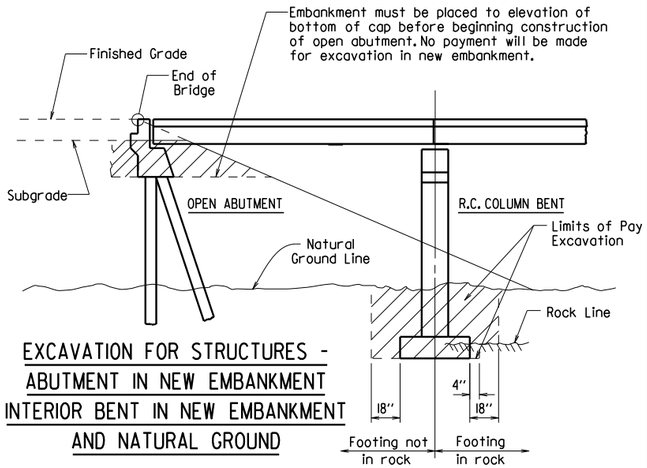

EXCAVATION FOR STRUCTURES - ABUTMENT IN NEW EMBANKMENT INTERIOR BENT IN NEW EMBANKMENT AND NATURAL GROUND

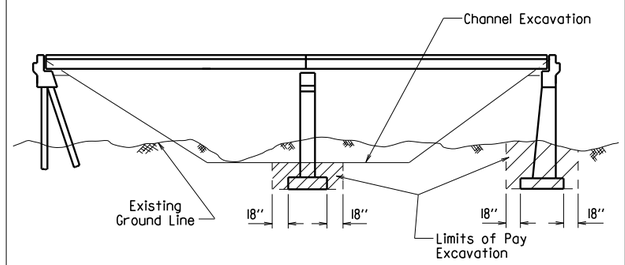

EXCAVATION FOR STRUCTURES - BRIDGE LOCATION WITH DESIGNATED CHANNEL CHANGE

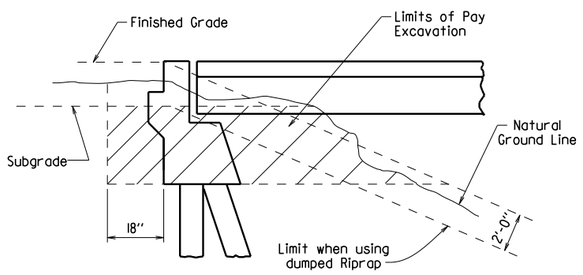

EXCAVATION FOR STRUCTURES - ABUTMENT IN NATURAL GROUND

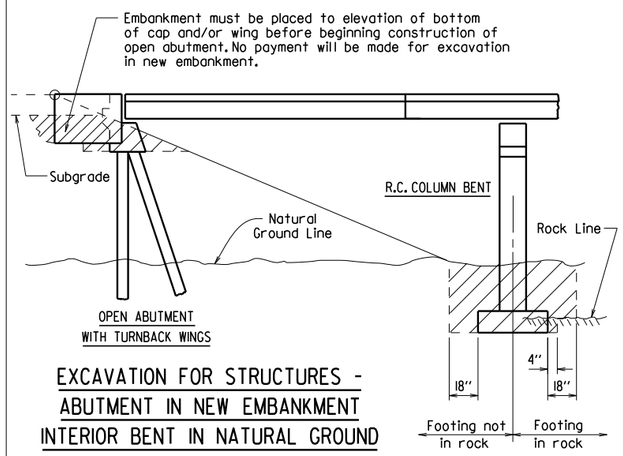

EXCAVATION FOR STRUCTURES - ABUTMENT IN NEW EMBANKMENT INTERIOR BENT IN NATURAL GROUND

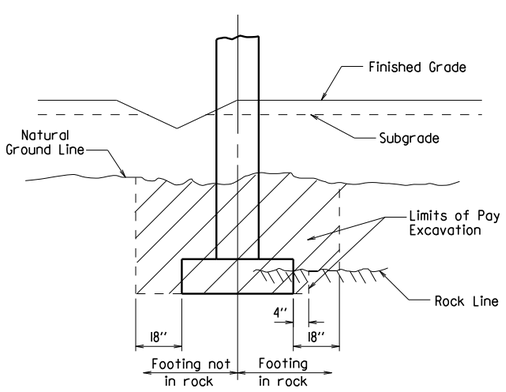

EXCAVATION FOR STRUCTURES - BENT IN ROADWAY FILL SECTION AND NATURAL GROUND

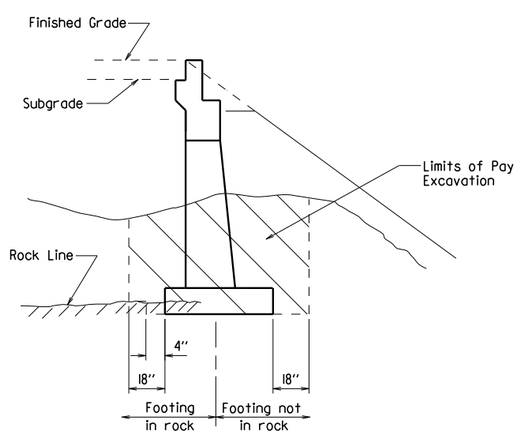

EXCAVATION FOR STRUCTURES - ABUTMENT IN NATURAL GROUND AND NEW EMBANKMENT

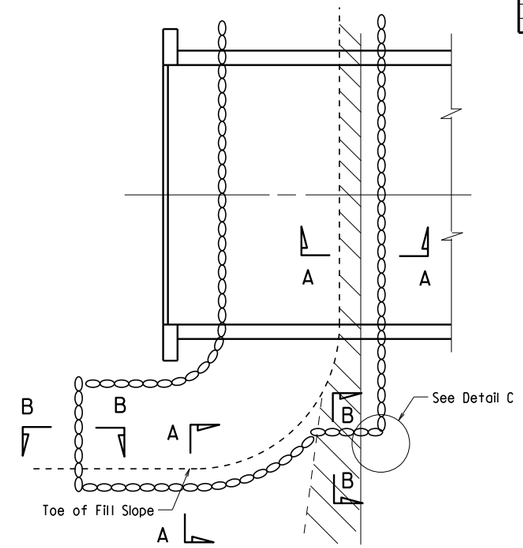

PLAN OF DUMPED RIPRAP

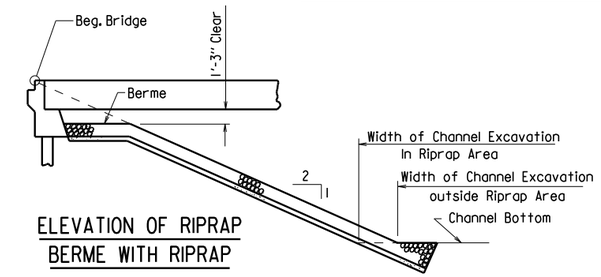

ELEVATION OF RIPRAP BERME WITH RIPRAP

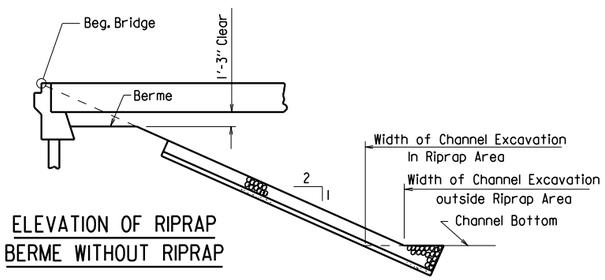

ELEVATION OF RIPRAP BERME WITHOUT RIPRAP

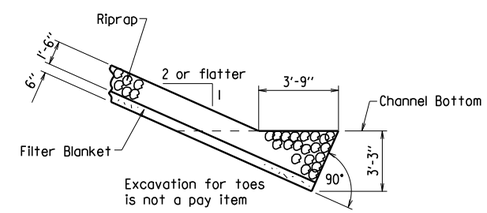

SECTION A-A

(Toe Excavation in Soil)

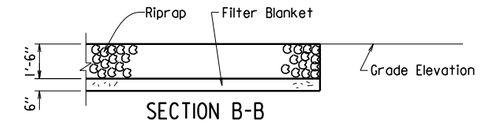

SECTION B-B

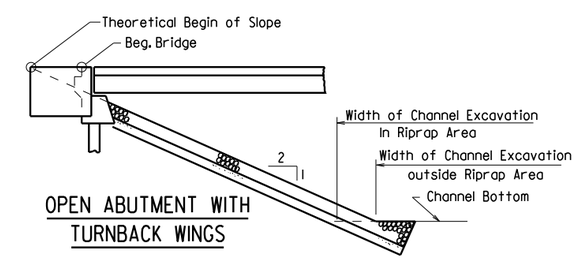

OPEN ABUTMENT WITH TURNBACK WINGS

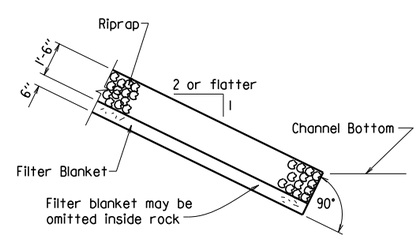

SECTION A-A

(Toe Excavation in Rock)

Note : Use this type of toe when rock is encountered which is in a stable condition.

Note : In lieu of an aggregate filter blanket, a synthetic fiber geotextile fabric complying with the requirements of Subsection 816.02(e) may be used.

Note : Details for computing excavation for structures are included for information as to how plan quantities were calculated and for use when adjusting quantities when changing footing elevation.

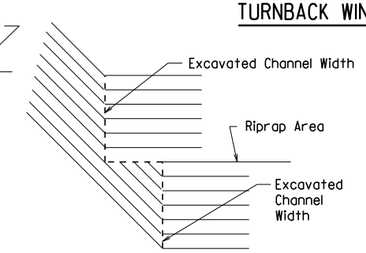

DETAIL C

STANDARD DETAILS FOR DUMPED RIPRAP AND FILTER BLANKET AND COMPUTING EXCAVATION FOR STRUCTURES

ARKANSAS STATE HIGHWAY COMMISSION

LITTLE ROCK, ARK.

DRAWN BY:	KDH	DATE:	2-27-2014	FILENAME:	b55001.dgn
CHECKED BY:	BEF	DATE:	2-27-2014	SCALE:	NO SCALE
DESIGNED BY:	STD.	DATE:			

DRAWING NO. 55001

DATE REVISED	DATE FILMED	DATE REVISED	DATE FILMED	FED. ROAD DIST. NO.	STATE	FED. AID PROJ. NO.	SHEET NO.	TOTAL SHEETS
				6	ARK.			
				JOB NO.				
				1	CONCRETE RIPRAP 55002			

Note:
Sloped surfaces of concrete riprap to be marked off into blocks (construction joints optional) with an approved grooving tool, spacing the grooved lines about 5' apart.

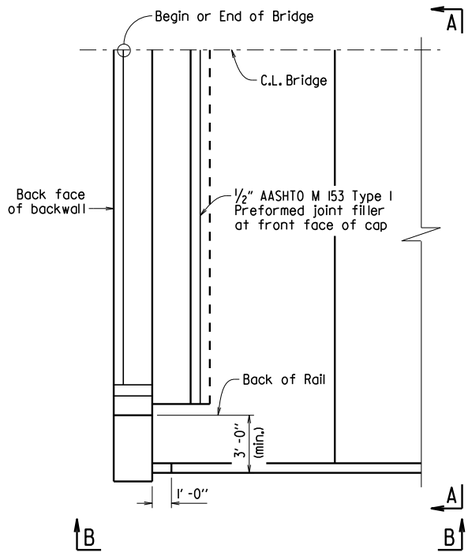

PLAN OF CONCRETE RIPRAP PERPENDICULAR TO WING
1/4" = 1'-0"

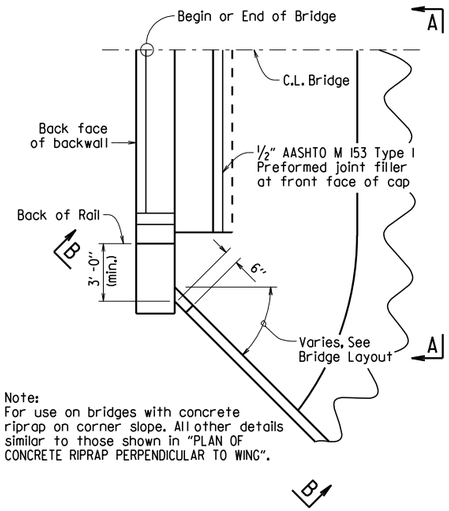

Note:
For use on bridges with concrete riprap on corner slope. All other details similar to those shown in "PLAN OF CONCRETE RIPRAP PERPENDICULAR TO WING".

PLAN OF CONCRETE RIPRAP AT ANGLE TO WING
1/4" = 1'-0"

Note:
For use on bridges with turned back wings. All other details similar to those shown in "PLAN OF CONCRETE RIPRAP PERPENDICULAR TO WING".

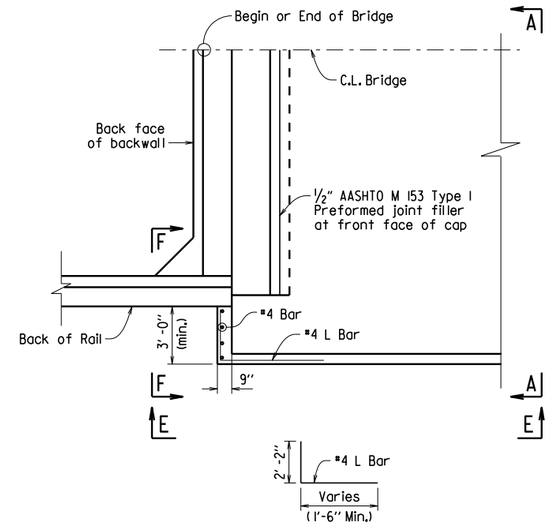

PLAN OF CONCRETE RIPRAP PERPENDICULAR TO TURNED BACK WING
1/4" = 1'-0"

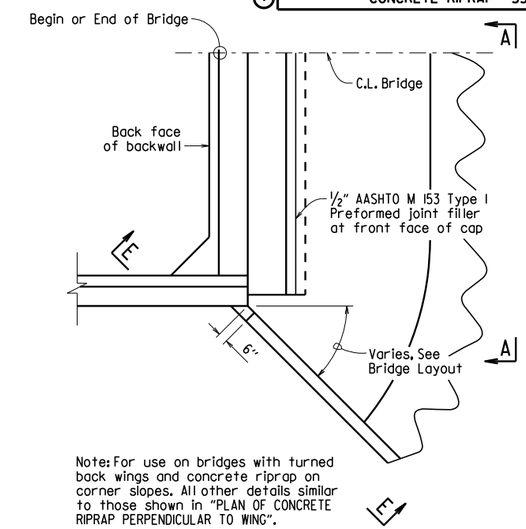

Note: For use on bridges with turned back wings and concrete riprap on corner slopes. All other details similar to those shown in "PLAN OF CONCRETE RIPRAP PERPENDICULAR TO WING".

PLAN OF CONCRETE RIPRAP AT ANGLE FROM TURNED BACK WING
1/4" = 1'-0"

Note:
Wing is shown perpendicular to concrete riprap. Details are similar when wing is at an angle to riprap.

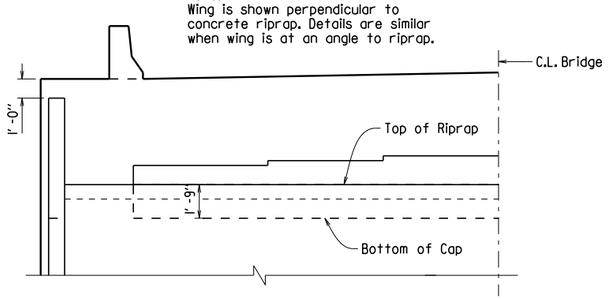

VIEW A-A
1/4" = 1'-0"

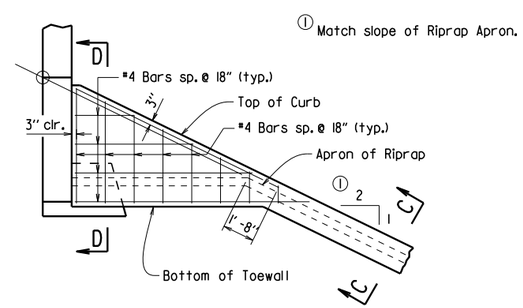

VIEW B-B
1/4" = 1'-0"

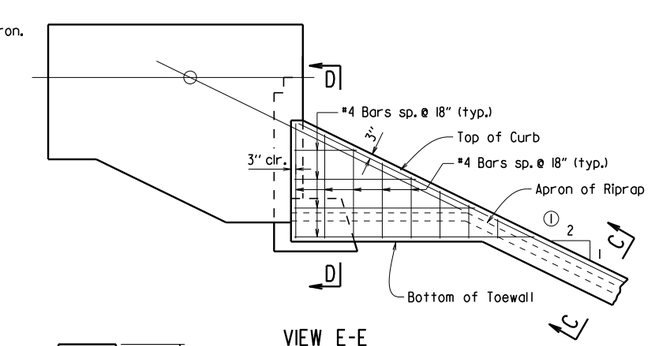

VIEW E-E
1/4" = 1'-0"

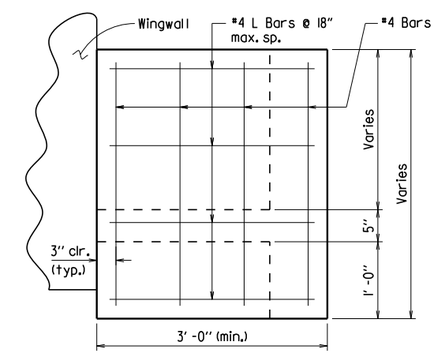

VIEW F-F
1" = 1'-0"

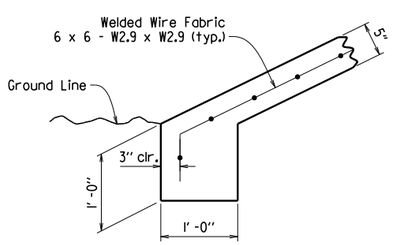

TOE OF CONCRETE RIPRAP
1" = 1'-0"

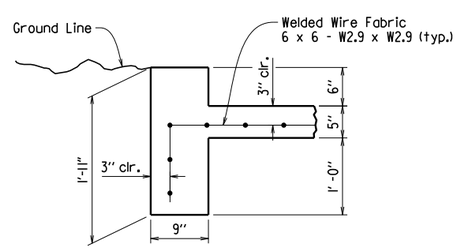

SECTION C-C
1" = 1'-0"

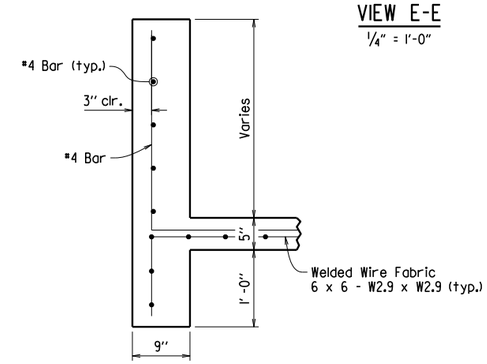

SECTION D-D
1" = 1'-0"

GENERAL NOTES

All concrete shall be Class A with a minimum compressive strength, f'c = 2,100 psi.

Welded wire fabric shall conform to AASHTO M55 or M221.

STANDARD DETAILS FOR CONCRETE RIPRAP

ARKANSAS STATE HIGHWAY COMMISSION

LITTLE ROCK, ARK.

DRAWN BY:	ACP	DATE:	2/27/2014	FILENAME:	b55002.dgn
CHECKED BY:	BEF	DATE:	2/27/2014	SCALE:	AS SHOWN
DESIGNED BY:	Std.	DATE:	---		

DRAWING NO. 55002

DATE REVISED	DATE FILMED	DATE REVISED	DATE FILMED	FED. ROAD DIST. NO.	STATE	FED. AID PROJ. NO.	SHEET NO.	TOTAL SHEETS
3/24/16				6	ARK.			
				JOB NO.				
				① BRIDGE DECK FORMS			55005	

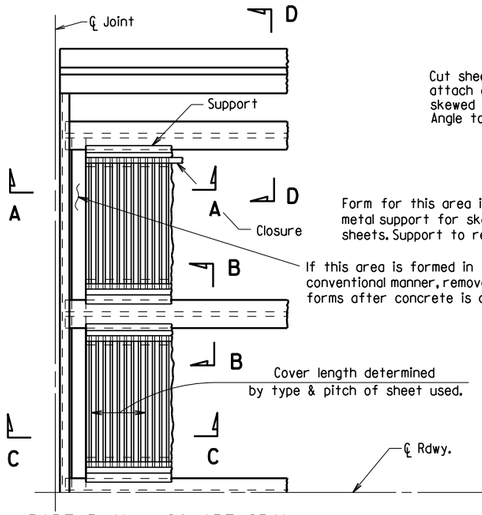

PART PLAN - SQUARE SPAN

3/8" = 1'-0"

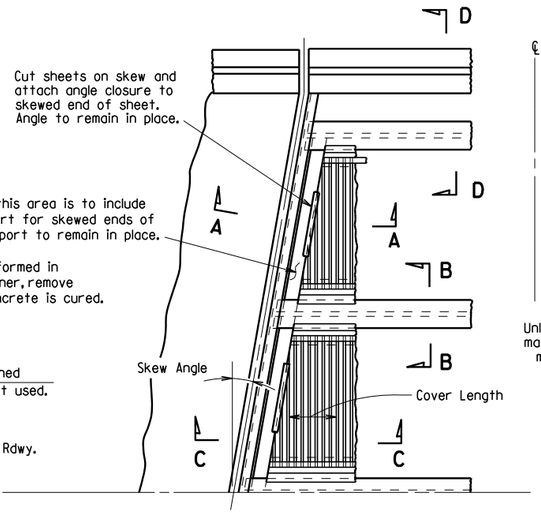

PART PLAN - SKEWED SPAN

3/8" = 1'-0"

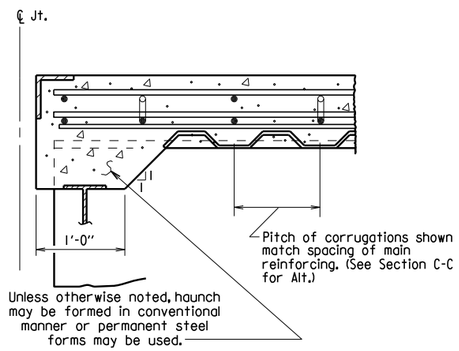

SECTION A-A

N.T.S.
(Angle at end of span)

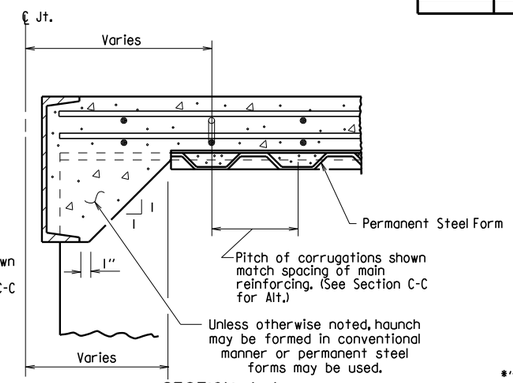

SECTION A-A

N.T.S.
(Channel at end of span)

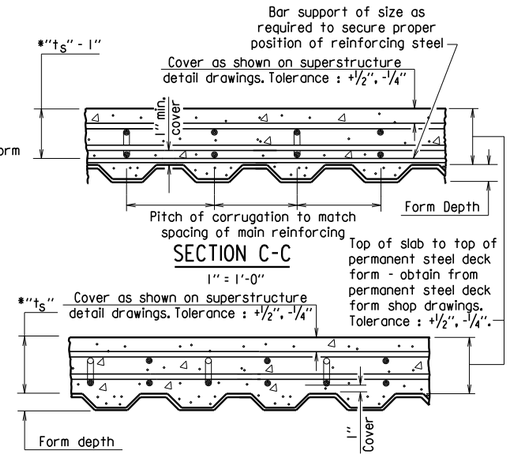

SECTION C-C

1" = 1'-0"

SECTION C-C - ALTERNATE

1" = 1'-0"
(Applicable when corrugations do not match spacing of main reinforcement)

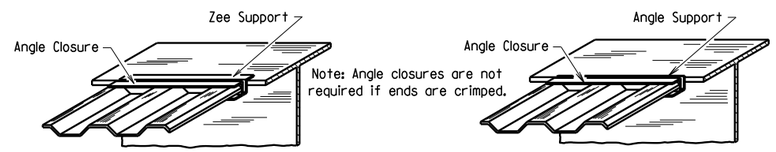

SKETCH OF PERMISSIBLE SUPPORTS

N.T.S.

$*t_s$ = slab thickness as shown on superstructure detail drawings.

GENERAL NOTES

Permanent steel deck forms may be used at the Contractor's option and shall be at no additional cost to the Department. Such use may result in changes to the dead load deflection of the girder. Any cost for adjustments due to a change in the dead load deflection will be borne by the Contractor. Payment for deck concrete and structural steel will not be increased due to use of permanent steel deck forms.

Permanent steel deck forms shall conform to Subsection 802.14(b). Detailed plans, including detailed calculations and manufacturer's technical brochure, shall be submitted to and approved by the Engineer before work of forming the bridge deck is started.

Welding of form supports to the tension flange of steel girders will be permitted only in areas where shear connectors are used. When welding is not allowed, the method of fastening Z or ∠ supports to the flange must be approved by the Engineer.

Form sheets shall be fastened to supporting members and to each other with galvanized metal screws sufficient in size and number to provide a secure attachment. Alternate methods of attachment must be approved by the Engineer.

When the pitch of form corrugations match the reinforcing spacing, transversely align form sheets across the bridge to maintain the correct orientation of continuous reinforcing bars in the corrugations.

Bar support rods, when used, shall be sized and spaced to adequately support the bottom reinforcing mat at the required position.

High chairs shall be sized to support the top mat of reinforcing at the proper position. High chairs shall be placed at locations shown on the detail drawings.

Specifications: Arkansas State Highway and Transportation Department Standard Specifications for Highway Construction (2014 Edition), with applicable Supplemental Specifications and Special Provisions.

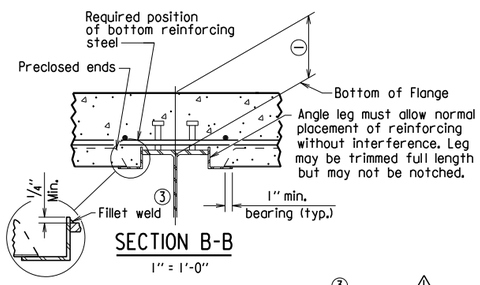

SECTION B-B

1" = 1'-0"
(Showing permissible support for tension flange where shear connectors are used, and for all compression flanges)

③ ⚠ Minimum weld: 1/8" x 1" @ 18". More weld may be required; maximum length per weld = 1 1/2" (typ.)

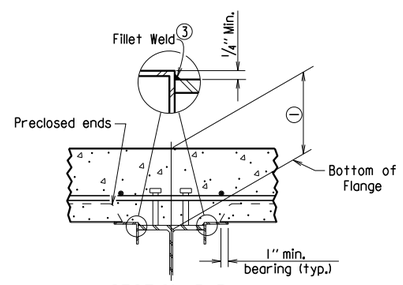

SECTION B-B

1" = 1'-0"
(Showing permissible support for tension flange where shear connectors are used and for all compression flanges)

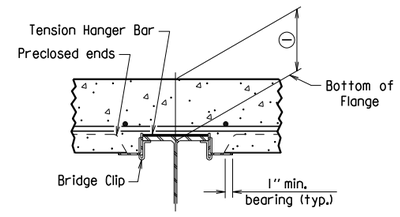

SECTION B-B

1" = 1'-0"
(Showing permissible support for tension flange where shear connectors are not used)

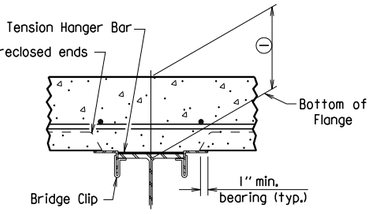

SECTION B-B

1" = 1'-0"
(Showing permissible support for tension flange where shear connectors are not used)

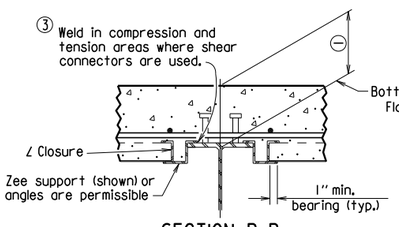

SECTION B-B

1" = 1'-0"
(Showing ∠ Closure)

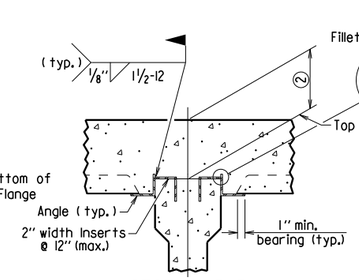

SECTION B-B
(FOR CONCRETE GIRDERS)

1" = 1'-0"
(Showing support by Insert cast in girder)

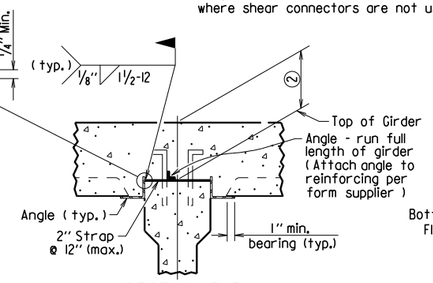

SECTION B-B
(FOR CONCRETE GIRDERS)

1" = 1'-0"
(Showing support by Strap)

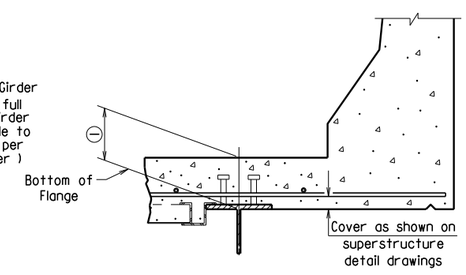

SECTION D-D

1" = 1'-0"
Note: Only Bottom Reinforcing is shown.

① Distance from top of slab to bottom of top flange as measured at centerline girder and as shown on superstructure detail drawings. This dimension may vary within the following limits to maintain the grade and slab thickness tolerances : Minimum - occurs when either the top flange or the support angle leg contacts the bottom reinforcing steel; Maximum = t_s + 1 3/4" + flange thickness. See Section C-C for slab thickness tolerance between adjacent girder flanges.

② Distance from top of slab to top of girder as measured at centerline girder and as shown on superstructure detail drawings. This dimension may vary within the following limits to maintain the grade and slab thickness tolerances : Minimum - occurs when either the top of girder or the support angle leg contacts the bottom reinforcing steel; Maximum - value shown on the superstructure detail drawings when removable forms are used. See Section C-C for slab thickness tolerance between adjacent girder flanges.

⚠ Revised weld dimension by KWY, Ck'd. by BEF, 3/24/16.

STANDARD DETAILS FOR PERMANENT STEEL BRIDGE DECK FORMS FOR STEEL & CONCRETE GIRDER SPANS

ARKANSAS STATE HIGHWAY COMMISSION

LITTLE ROCK, ARK.

DRAWN BY:	KDH	DATE:	2-27-2014	FILENAME:	b55005.dgn
CHECKED BY:	BEF	DATE:	2-27-2014	SCALE:	NONE
DESIGNED BY:	STD.	DATE:	—		

DRAWING NO. 55005

DATE REVISED	DATE FILMED	DATE REVISED	DATE FILMED	FED. ROAD DIST. NO.	STATE	FED. AID PROJ. NO.	SHEET NO.	TOTAL SHEETS
				6	ARK.			
				JOB NO.				
				1		GENERAL NOTES	55006	

GENERAL NOTES

These GENERAL NOTES are applicable unless otherwise shown in the Plan Details, Special Provisions, or Supplemental Specifications.

CONSTRUCTION SPECIFICATIONS: Arkansas State Highway and Transportation Department Standard Specifications for Highway Construction (2014 Edition) with applicable Supplemental Specifications and Special Provisions. Section and Subsection refer to the Standard Specifications.

DESIGN SPECIFICATIONS: See Bridge Layout(s).

SUPERSTRUCTURE NOTES:

MATERIALS AND STRENGTHS:

Class S(AE) Concrete	f'c =	4,000 psi
Reinforcing Steel (Gr. 60, AASHTO M 31 or M 322, Type A)	fy =	60,000 psi
Structural Steel (AASHTO M 270, Gr. 36)	Fy =	36,000 psi
Structural Steel (AASHTO M 270, Gr. 50)	Fy =	50,000 psi
Structural Steel (AASHTO M 270, Gr. 50W)	Fy =	50,000 psi
Structural Steel (AASHTO M 270, Gr. HPS70W)	Fy =	70,000 psi

See Plan Details for Grade(s) of Structural Steel required.

CONCRETE:

All concrete shall be Class S(AE) with a minimum 28 day compressive strength f'c = 4,000 psi. Concrete shall be poured in the dry and all exposed corners shall be chamfered 3/4" unless otherwise noted.

The superstructure details shown are for use when removable deck forming is used and are the basis for measurement of Class S(AE) Concrete. See Standard Drawing No. 55005 for allowable modifications and for tolerances when Permanent Steel Bridge Deck Forms are used.

Use of a longitudinal screed is not permitted on any span of a bridge deck with horizontal curvature.

The concrete deck (roadway surface) shall be given a tine finish in accordance with Subsection 802.19 for Class 5 Tined Bridge Roadway Surface Finish. Sidewalks shall receive a broomed finish as specified for final finishing in Subsection 802.19 for Class 6 Broomed Finish. Movement of the finishing machine across new concrete shall be on planks placed on the surface and shall be prohibited for 72 hours after finishing the pour. Sufficient concrete must be placed ahead of the strike-off to fully load the beam or girder. When permitted, the use of a longitudinal strike-off will require that a vertical camber adjustment be made in the strike-off to account for the future dead load deflection due to any railings, median barrier, and sidewalks.

REINFORCING STEEL:

All reinforcing steel shall be Grade 60 conforming to AASHTO M 31 or M 322, Type A, with mill test reports and shall be epoxy coated. The reinforcing steel is to be accurately located in the forms and firmly held in place by steel wire supports, sufficient in number and size to prevent displacement during the course of construction. The wire supports will not be paid for directly, but will be considered subsidiary to the item "Epoxy Coated Reinforcing Steel (Grade 60)".

STRUCTURAL STEEL (COMMON TO W-BEAMS AND PLATE GIRDERS):

Structural steel shall be AASHTO M 270 with grade and payment as specified in the plans. Grade 50W steel shall not be painted and all exposed surfaces shall be cleaned in accordance with Subsection 807.84(e). Grade 36 and Grade 50 steel shall be painted unless otherwise noted and all exposed surfaces shall be cleaned in accordance with Subsection 807.84. Structural steel completely embedded in concrete may be AASHTO M 270, Gr. 36, Gr. 50 or Gr. 50W unless otherwise noted.

Drawings show general features of design only. Shop drawings shall be made in accordance with the specifications, submitted and approval secured before fabrication is begun.

Requests for substitution of structural steel shapes shown with shapes of greater size must be submitted by the Contractor to the Engineer for approval. Steels of equal or greater strengths will be accepted only when shown on the approved shop drawings. Payment will be based on the basis of shapes and materials shown in the plans, and no additional compensation will be made for any adjustments due to substitutions.

All welding that is to be done during fabrication of structural steel, including temporary welds, shall be detailed on the shop drawings and submitted for approval. If additional welds are required, whether permanent or temporary, a formal request with detailed drawings shall be submitted to the Engineer for approval; however, additional welds used for attaching falsework support devices or screed rail supports to the structural steel that do not exceed the limitations of Subsection 802.13 will not require approval prior to construction. All welding shall conform to Subsection 807.26.

Unless otherwise noted, field connections shall be bolted with 3/4" ø high-strength bolts using 13/16" ø open holes. Holes for 3/4" ø high-strength bolts may be 15/16" ø if a washer is supplied for use under both the nut and head of the bolt. The use of oversized holes will not be allowed on main members unless otherwise noted. Bolts shall be placed with heads on the outside face of the exterior beam or girder webs and on the bottom of the beam or girder flanges.

All stud shear connectors shall be granular flux filled, solid fluxed, or equal and shall be automatically end welded in accordance with recommendations of the Manufacturer.

When painting is required, all structural steel except galvanized steel and steel completely encased in concrete shall be painted in accordance with Subsection 807.75. The color of paint shall be as specified in the plans.

STRUCTURAL STEEL (W-BEAMS):

All beams and field splice plates, and all diaphragms and connection plates attached to horizontally curved beams are considered main load carrying members and shall meet the Longitudinal Charpy V-Notch Test specified in Subsection 807.05. This work and material will not be paid for directly, but shall be considered subsidiary to the item "Structural Steel in Beam Spans (M 270, Gr. ___)".

All beams in continuous units and simple spans with field splices shall be blocked in their true position in the shop in groups as specified in Subsection 807.54(b)(2) with the webs horizontal. The camber, length of sections, distance between bearings, and openings of joints shall be measured and this information shall become part of the permanent records. The component parts shall be match marked in this assembly and these marks shall be shown on the erection diagram.

All beams in simple spans without field splices shall be blocked in their true position with webs horizontal. The camber, distance between bearings, and openings of joints shall be measured and this information shall become part of the permanent records.

Flange field splice plates shall be cut and fabricated so that the primary direction of rolling is parallel to the direction of the main tensile and/or compressive stresses.

All beam dimensions are based on a temperature of 60 degrees F. A tolerance of 1/4" +/- is allowed for camber.

Bent plate diaphragms for horizontally curved beams shall be cut and fabricated so that the primary direction of rolling is parallel to the direction of the main tensile and/or compressive stresses. Bent plate diaphragms for straight beams may be cut and fabricated in accordance with Subsection 807.35 or as required for horizontally curved beams.

Unless otherwise noted, diaphragms shall be installed as beams are erected. All bolts in diaphragms and field splices shall be installed and tightened in accordance with Subsection 807.71 prior to pouring the concrete deck.

STRUCTURAL STEEL (PLATE GIRDERS):

All references to cross-frames shall include "X" or "K" types.

All girder web and flange plates, all field splice plates, and all diaphragms, cross-frames and connection plates attached to horizontally curved girders are considered main load carrying members and shall meet the Longitudinal Charpy V-Notch Test specified in Subsection 807.05. This work and material will not be paid for directly, but shall be considered subsidiary to the item "Structural Steel in Plate Girder Spans (M 270, Gr. ___)".

All girders in continuous units and simple spans with field splices shall be assembled in the shop as specified in Subsection 807.54(b)(2) and blocked in their true position with webs horizontal. The camber, length of sections, distance between bearings, and openings of joints shall be measured and this information shall become part of the permanent records. The component parts shall be match marked in this assembly and these marks shall be shown on the erection diagram.

All girders in simple spans without field splices shall be blocked in their true position with webs horizontal. The camber, distance between bearings, and openings of joints shall be measured and this information shall become part of the permanent records.

Web and flange plates for main members and flange splice plates for main members shall be cut and fabricated so that the primary direction of rolling is parallel to the direction of the main tensile and/or compressive stresses.

Girder webs may be made by shop splicing with minimum lengths of 25 feet for sections. Flange plates longer than 50 feet may be made by shop splicing with minimum lengths of 25 feet for sections. No additional payment will be made for shop welded splices.

All girder dimensions are based on a temperature of 60 degrees F. A tolerance of 1/4" +/- is allowed for camber.

Groove welds in web and flange plates shall be Quality Control (Q.C.) tested by nondestructive testing, as required in Subsection 807.23(b). Fillet welds at flange to web plate connections shall be Q.C. tested by the magnetic particle method. All Q.C. testing shall be considered subsidiary to the item "Structural Steel in Plate Girder Spans (M 270, Gr. ___)".

Bent plate diaphragms for horizontally curved girders shall be cut and fabricated so that the primary direction of rolling is parallel to the direction of the main tensile and/or compressive stresses. Bent plate diaphragms for straight girders may be cut and fabricated in accordance with Subsection 807.35 or as required for horizontally curved girders.

Unless otherwise noted, cross-frames and diaphragms shall be installed as girders are erected. All bolts in cross-frames, diaphragms, and field splices shall be installed and tightened in accordance with Subsection 807.71 prior to pouring the concrete deck.

SUBSTRUCTURE NOTES:

CONCRETE:

Unless otherwise noted, concrete in caps, columns and footings (except seal footings) shall be Class "S" with a minimum 28 day compressive strength f'c = 3,500 psi and shall be poured in the dry. Seal Concrete for footings shall have a minimum 28 day compressive strength f'c = 2,100 psi.

Concrete in drilled shafts shall be Class "S" as modified by Job SP "Drilled Shaft Foundations".

All exposed corners shall be chamfered 3/4" unless otherwise noted.

REINFORCING STEEL:

All reinforcing steel shall be Grade 60 (yield strength = 60,000 psi) conforming to AASHTO M 31 or M 322, Type A, with mill test reports.

Top reinforcing bars in cap shall be properly placed to avoid interference with anchor bolts or sheet metal sleeves.

STRUCTURAL STEEL:

Structural steel in end bents shall be AASHTO M 270 with grade and payment as specified in the plans.

FOR ADDITIONAL INFORMATION AND NOTES, SEE LAYOUT(S) AND PLAN DETAILS.

STANDARD GENERAL NOTES
FOR STEEL BRIDGE STRUCTURES

ARKANSAS STATE HIGHWAY COMMISSION
LITTLE ROCK, ARK.

DRAWN BY:	A.M.S.	DATE:	9-2-2015	FILENAME:	b55006.dgn
CHECKED BY:	B.E.F.	DATE:	9-2-2015	SCALE:	NO SCALE
DESIGNED BY:	STD.	DATE:			

DRAWING NO. 55006

PRINT DATE: 11/7/2019

DATE REVISED	DATE FILMED	DATE REVISED	DATE FILMED	FED. ROAD DIST. NO.	STATE	FED. AID PROJ. NO.	SHEET NO.	TOTAL SHEETS
				6	ARK.			
				JOB NO.				
				1	STEEL BRIDGE STRUCTURES 55007			

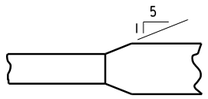

Plan-Unequal Width (Flg.)

FLANGE SPLICE

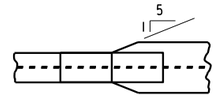

FLANGE SPLICE AT UNEQUAL BOTTOM FLANGE WIDTHS

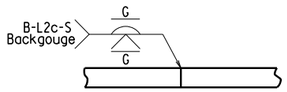

Equal Thickness

WEB & FLANGE SPLICE

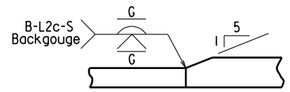

Unequal Thickness

FLANGE SPLICE

(Use when Base Metal Thickness is Equal to or Less than 2")

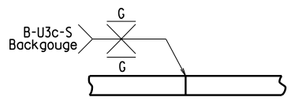

Equal Thickness

WEB & FLANGE SPLICE

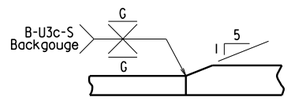

Unequal Thickness

FLANGE SPLICE

(Use when Base Metal Thickness is Greater than 2")

DETAILS OF WELDED SPLICES FOR PLATE GIRDERS

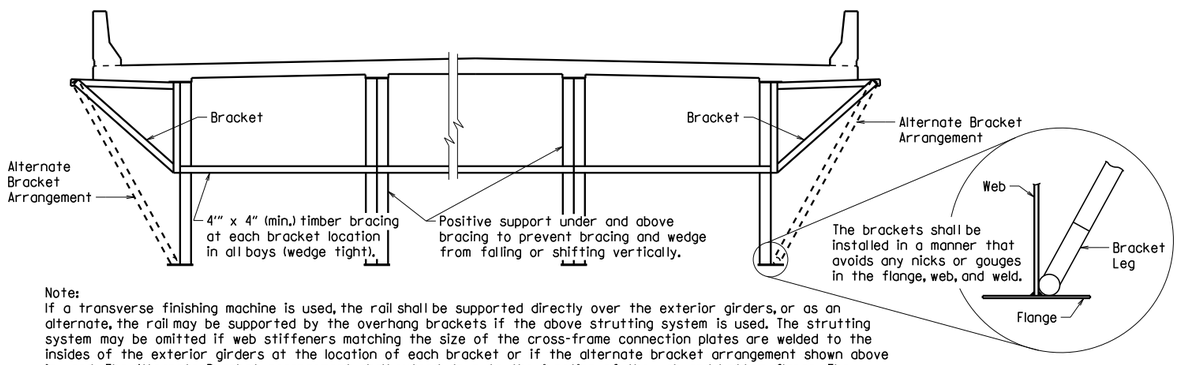

Note:
If a transverse finishing machine is used, the rail shall be supported directly over the exterior girders, or as an alternate, the rail may be supported by the overhang brackets if the above strutting system is used. The strutting system may be omitted if web stiffeners matching the size of the cross-frame connection plates are welded to the insides of the exterior girders at the location of each bracket or if the alternate bracket arrangement shown above is used. The Alternate Bracket arrangement shall extend down to the junction of the web and bottom flange. The stiffener shall conform to the details for cross frame connection plates shown on the plans. No direct payment will be made for brackets, timber bracing, supports, or welded stiffeners. Payment shall be subsidiary to "Structural Steel in Plate Girder Spans (____)".

SCREED RAIL SUPPORT FOR PLATE GIRDERS

(USE WHEN WEB DEPTHS ARE 48" OR GREATER)

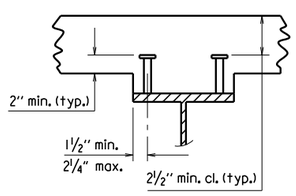

2 STUDS PER ROW

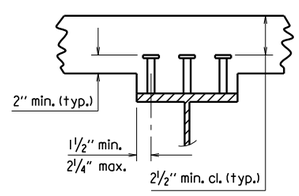

3 STUDS PER ROW

Stud Shear Connectors shall be automatically end welded to the beam or girder flange in accordance with the recommendations of the Manufacturer. See plan details for number and size.

SHEAR CONNECTOR DETAIL

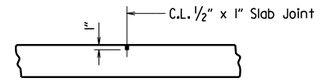

Use Type 3 or 4 Joint Sealer. See Subsections 501.02(h) and 501.05(j). Backer Rod filler will not be required. Joint Sealer shall be measured and paid for as Class S(AE) Concrete-Bridge. Slab Joints shall extend to the outside edge of the deck slab and shall align with open joints at the front face of the parapet. Slab joints shall be installed before the parapet railing is poured. If slab joints are to be sawed, they shall be sawed as soon as the concrete has sufficiently set to allow sawing of the joint without damage to the slab. Slab joints shall be placed at all pouring sequence construction joints and required slab joint locations. The joint sealer shall extend across the deck from gutterline to gutterline.

ADDITIONAL NOTES IF SIDEWALKS OR RAISED MEDIANS ARE REQUIRED:
Slab Joints shall be installed before the sidewalk or raised median is poured. After installation of the joint in the sidewalk or raised median and prior to pouring the parapet rail, the joint sealer shall be placed extending across the deck slab from gutterline to gutterline and acrosss the top of the sidwalk or raised median to the edge of the slab. No joint sealer shall be placed on the deck slab under the sidewalk or raised median.

TRANSVERSE SLAB JOINT DETAIL

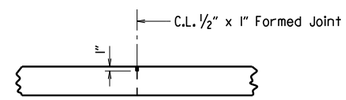

Use ½" x 1" Type 3 or 4 Joint Sealer. See Subsections 501.02(h) and 501.05(j). Backer Rod filler will not be required. Joint sealer shall be measured and paid for as Class S(AE) Concrete-Bridge. This joint shall be formed. Seal color shall be gray or other color similar to concrete.

LONGITUDINAL CONSTRUCTION JOINT

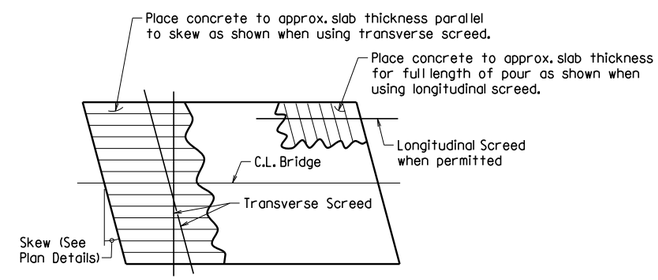

Note: At the Contractor's option, the transverse screed may be placed parallel to the skew or perpendicular to C.L. Bridge.

CONCRETE PLACEMENT PROCEDURE FOR BRIDGES WITH SKEW

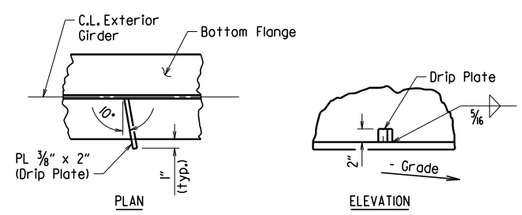

Drip Plate to be welded to the outer side of the bottom flange of the exterior girders.

Locate drip plate 5'-0" from C.L. Bearing on high side of each Bent, unless otherwise noted in the plans.

BOTTOM FLANGE DRIP PLATE

(USE WHEN WEB DEPTHS ARE 54" OR GREATER AND UNIT OR SPAN IS NOT IN LEVEL GRADE)

t_s = slab thickness. See "Typical Roadway Section" in the plans.

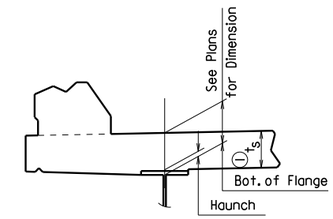

EXTERIOR BEAM OR GIRDER

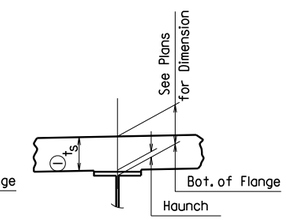

INTERIOR BEAM OR GIRDER

(1) Tolerance when removable deck forming is used is + ½", - ¼". Haunch forming is required and shall be adjusted to maintain slab thickness tolerance.

NOTES:
Haunch dimension may vary within the following limits to maintain the grade and slab thickness tolerance: Minimum occurs when top flange contacts bottom reinforcing steel; Maximum = top flange thickness plus 1¾" unless otherwise noted in the plans. No increase in concrete and structural steel quantities will be made to maintain tolerances.

Tolerances shown are applicable only when removable deck forming is used. See Std. Dwg. No. 55005 for tolerances when permanent steel deck forms are used. Payment for concrete shall be based on removable deck forming.

ADJUSTMENT FOR SLAB THICKNESS TOLERANCE

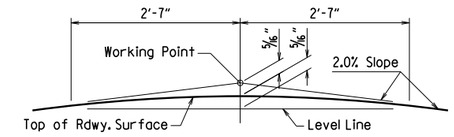

NOTE: Working Point matches Theoretical Roadway Grade.

ROUNDING DETAIL

BRIDGES IN NORMAL CROWN

WELD TABLE

Material Thickness of Thicker Part Joined (Inches)	Minimum Size of Fillet Weld (Inches)	Single Pass Weld Must Be Used
To ¾" Inclusive	¼"	
Over ¾"	5/16"	

NOTE: When a fillet weld size, as shown on the plans, is larger than the minimum, the first pass shall be that specified for minimum size of fillet weld.

SECTION AND SUBSECTION REFER TO THE ARKANSAS STATE HIGHWAY AND TRANSPORTATION DEPARTMENT STANDARD SPECIFICATIONS FOR HIGHWAY CONSTRUCTION (2014 EDITION).

THESE DETAILS ARE APPLICABLE UNLESS OTHERWISE SHOWN IN THE PLAN DETAILS, SPECIAL PROVISIONS, OR SUPPLEMENTAL SPECIFICATIONS.

STANDARD DETAILS FOR STEEL BRIDGE STRUCTURES

ARKANSAS STATE HIGHWAY COMMISSION

LITTLE ROCK, ARK.

DRAWN BY:	JYP	DATE:	2/11/2016	FILENAME:	b55007.dgn
CHECKED BY:	AMS	DATE:	2/11/2016	SCALE:	No Scale
DESIGNED BY:	STD.	DATE:	—		

DRAWING NO. 55007

DATE REVISED	DATE FILMED	DATE REVISED	DATE FILMED	FED. ROAD DIST. NO.	STATE	FED. AID PROJ. NO.	SHEET NO.	TOTAL SHEETS
				6	ARK.			
				JOB NO.				
				1	POURED SILICONE JOINT			55008

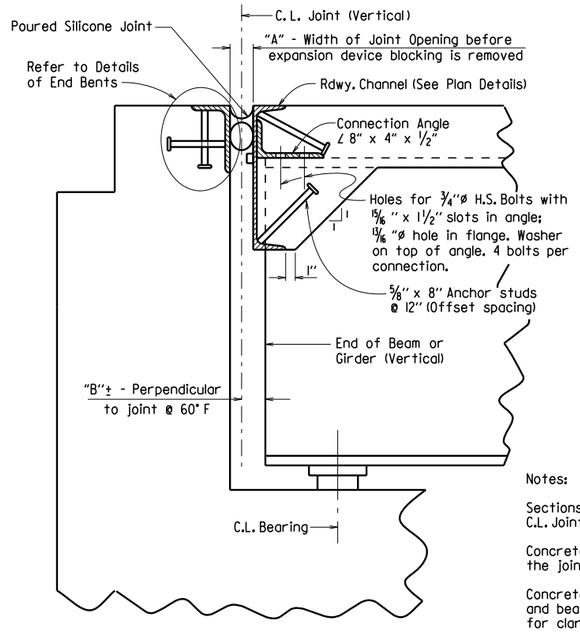

SECTION THRU JOINT AT END BENT

Notes:

Sections are taken perpendicular to C.L. Joint.

Concrete shall be hand packed under the joint armor.

Concrete diaphragms, steel diaphragms and bearing stiffeners are not shown for clarity. See plans for details.

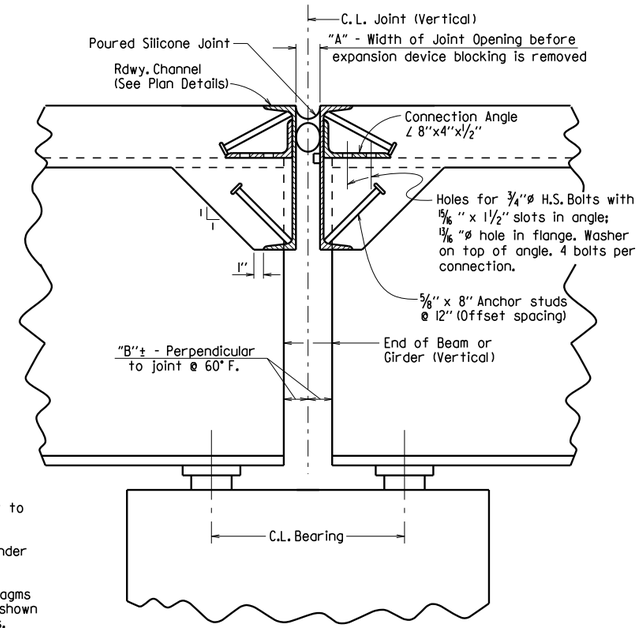

SECTION THRU JOINT AT INTERMEDIATE BENT

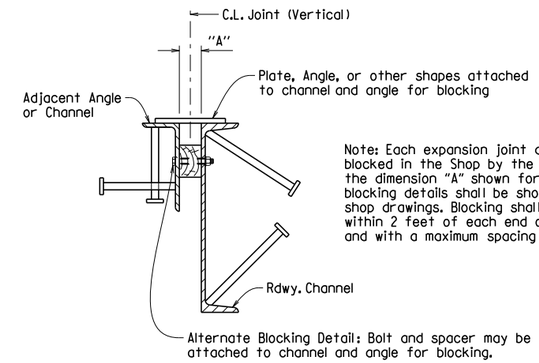

Note: Each expansion joint device shall be blocked in the Shop by the Fabricator to the dimension "A" shown for 60° F and the blocking details shall be shown on the shop drawings. Blocking shall be placed within 2 feet of each end of the device and with a maximum spacing of 8 feet.

DETAILS FOR BLOCKING EXPANSION JOINT DEVICE

EXPANSION DEVICE INSTALLATION AT END BENTS:

The Contractor may elect to install the expansion device using one of the following two alternatives:

1) The concrete span pour adjacent to joint shall be placed before the end bent backwall is placed. After the end bent backwall forms are in place and the beams or girders erected, the blocked expansion device shall be installed and adjusted for grade. All connection bolts shall be fully tightened prior to placing the deck concrete adjacent to the bent. Immediately prior to pouring the backwall concrete, the blocking shall be removed, and the opening adjusted for temperature and grade.

2) The backwall shall be poured to the optional construction joint after beams or girders are erected. The blocked expansion device shall be installed and adjusted for grade. All connection bolts shall be fully tightened prior to placing the deck concrete adjacent to the bent. Immediately prior to pouring the remainder of the backwall concrete, the blocking shall be removed and the opening adjusted for temperature and grade.

EXPANSION DEVICE INSTALLATION AT INTERMEDIATE BENTS:

After all beams or girders on each side of the joint are erected the blocked expansion device shall be installed and adjusted for grade. Deck concrete shall be placed for the entire unit or span on one side of the joint before deck concrete on the other side is placed. Connection bolts for the first side to have deck concrete placed shall be completely bolted. Bolts on the other side shall be loosely installed so that thermal and rotational movements will not be restricted during concrete placement on the first side.

Connection bolts on the second side shall remain loose until the concrete pour adjacent to the joint is to be placed. Immediately prior to pouring the span concrete on the second side, the blocking shall be removed, the joint adjusted for temperature and grade, and the connection bolts tightened.

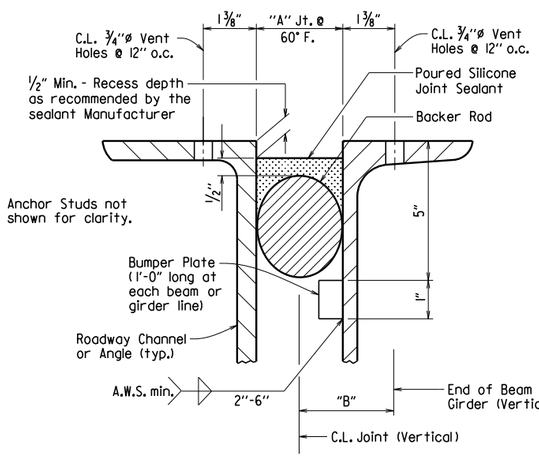

DETAIL OF POURED SILICONE JOINT

Silicone joint material and installation shall conform to Section 809. The temperature limitations recommended by the sealant Manufacturer shall be observed. The sealant shall be installed only when the average 24 hour air temperature is between 40° and 80° F.

Use an appropriately sized backer rod at the depth shown in the Manufacturer's literature based on the joint width at the time of sealing. Unless otherwise noted, do not install more backer rod than can be sealed in the same day.

The Contractor shall verify separation of the backer rod from the joint material after the joint material has set.

When bridge deck is constructed in stages, backer rods shall be extended beyond length of poured joint in initial construction stage so that the two pieces can be properly spliced together prior to installing sealant in subsequent stages. Manufacturer's recommendations shall be followed to prevent sealant from "running out of joint" during stage construction.

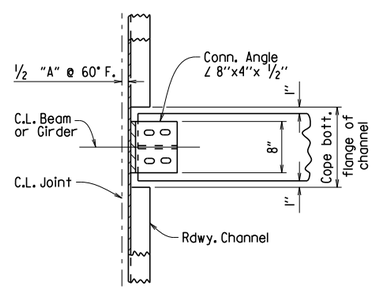

CHANNEL CONNECTION DETAIL

BENTS WITHOUT SKEW

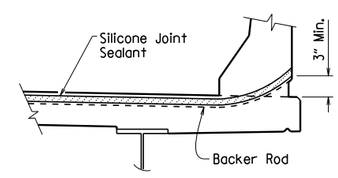

JOINT SEAL PLACEMENT AT RAIL

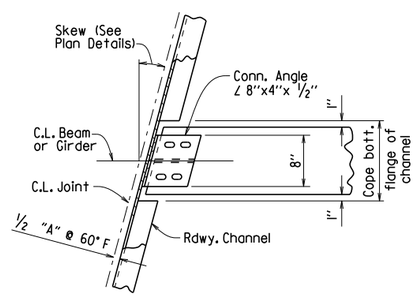

CHANNEL CONNECTION DETAIL

BENTS WITH SKEW

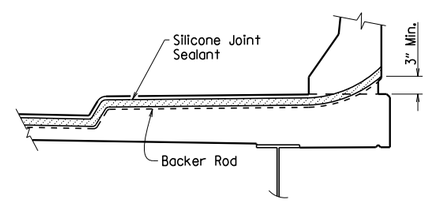

JOINT SEAL PLACEMENT AT SIDEWALK

SECTION AND SUBSECTION REFER TO THE ARKANSAS STATE HIGHWAY AND TRANSPORTATION DEPARTMENT STANDARD SPECIFICATIONS FOR HIGHWAY CONSTRUCTION (2014 EDITION).

THESE DETAILS ARE APPLICABLE UNLESS OTHERWISE SHOWN IN THE PLAN DETAILS, SPECIAL PROVISIONS, OR SUPPLEMENTAL SPECIFICATIONS. SEE "TABLE OF SILICONE JOINT DATA" IN PLAN DETAILS FOR VARIABLES "A" AND "B", AND BUMPER PLATE SIZE.

STANDARD DETAILS FOR POURED SILICONE JOINTS

ARKANSAS STATE HIGHWAY COMMISSION

LITTLE ROCK, ARK.

DRAWN BY:	A.C.P.	DATE:	2/11/2016	FILENAME:	b55008.dgn
CHECKED BY:	A.M.S.	DATE:	2/11/2016	SCALE:	No Scale
DESIGNED BY:	STD.	DATE:	—		

DRAWING NO. 55008

DATE REVISED	DATE REVISED	FED. RD. DIST. NO.	STATE	JOB NO.	SHEET NO.	TOTAL SHEETS
4-14-23		6	ARK.			
		TYPE D NAME PLATE - 55010				

The name of the bridge as shown on the plans shall be placed on Lines 1 & 2 using ⅛" raised letters and numerals ⅜" high.

	Example 1	Example 2	Example 3	Example 4
Line 1	RED RIVER	SOUTHERN RAILROAD	SALINE RIVER	HIGHWAY 5
Line 2	RELIEF	OVERPASS	RELIEF	

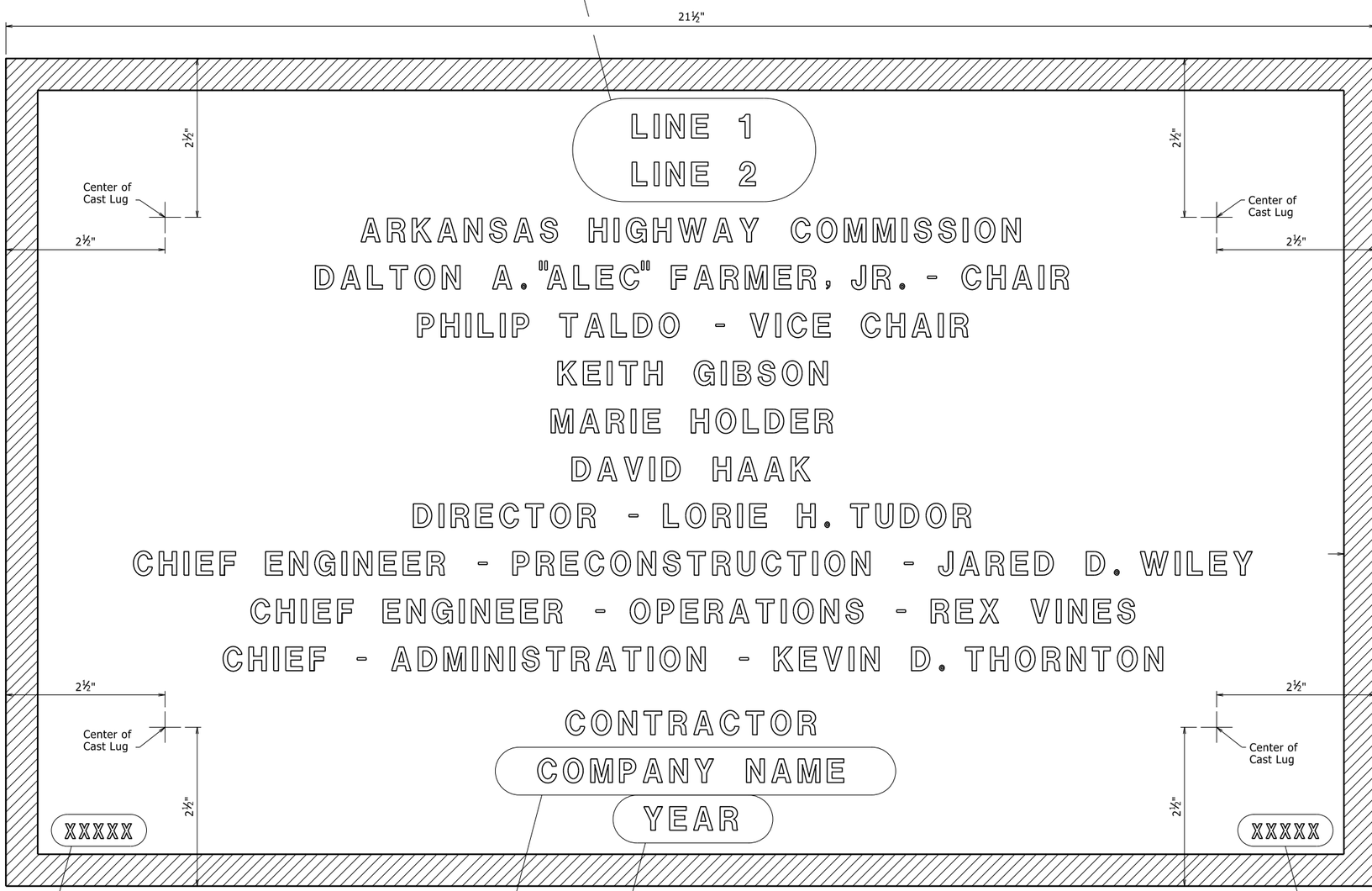

TYPICAL BRIDGE NAME PLATE

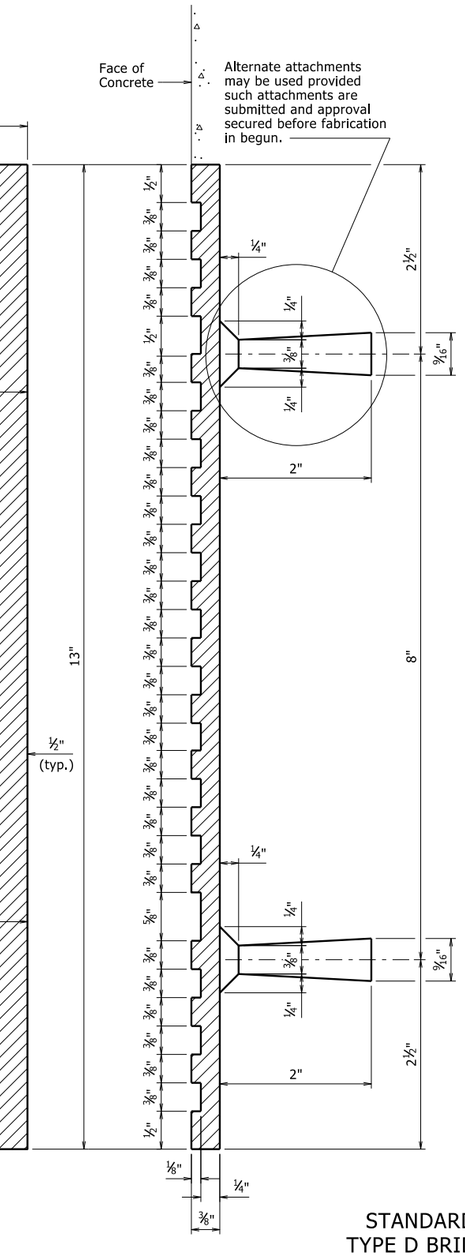

GENERAL NOTES

Specifications: Arkansas State Highway and Transportation Department Standard Specifications for Highway Construction, (2014 Edition) with applicable Supplemental Specifications and Special Provisions.

Name plates shall be cast bronze and shall meet the material requirements as specified in Section 812.

Body of plate shall be ¼" thick and shall include four tapering cone lugs ⅜" to 9/16" x 2" long. The border and all lettering shall be raised ⅛" above the face of plate and shall be polished.

All lettering shall be plain gothic, square cut and not tapered.

The number of plates required and the location and name on the plate for each bridge shall be as designated on the plans.

1 Revised and Redrawn
4-14-23 CGP Checked By: CRE

STANDARD DETAILS FOR
TYPE D BRIDGE NAME PLATE

ROUTE SEC.

ARKANSAS STATE HIGHWAY COMMISSION
LITTLE ROCK, ARK.

DRAWN BY: KDH DATE: 2-27-2014 FILENAME: b55010.dgn
CHECKED BY: BEF DATE: 2-27-2014 SCALE: NO SCALE
DESIGNED BY: STD. DATE:

DRAWING NO. 55010

PRINT DATE: 4/20/2023

DATE REVISED	DATE FILMED	DATE REVISED	DATE FILMED	FED. ROAD DIST. NO.	STATE	FED. AID PROJ. NO.	SHEET NO.	TOTAL SHEETS
				6	ARK.			
				JOB NO.				

(1) Type F Approach Gutters - 55030F

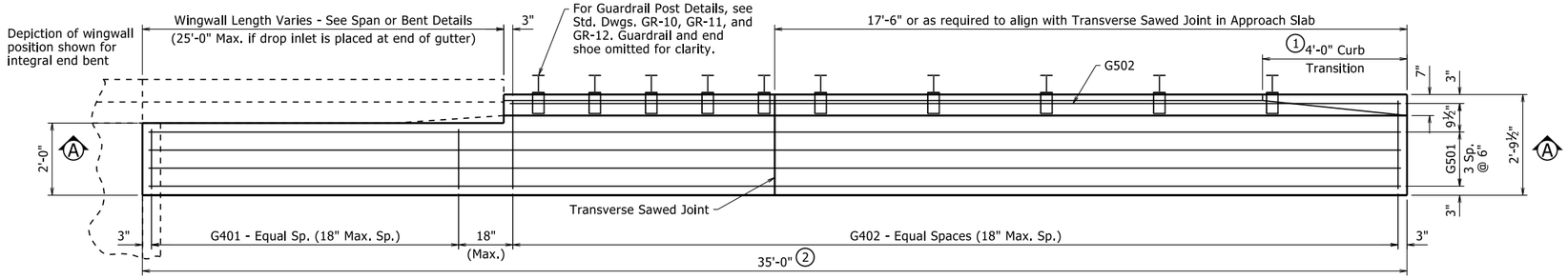

HALF PLAN OF APPROACH GUTTERS FOR SQUARE END BENT

½" = 1'-0"

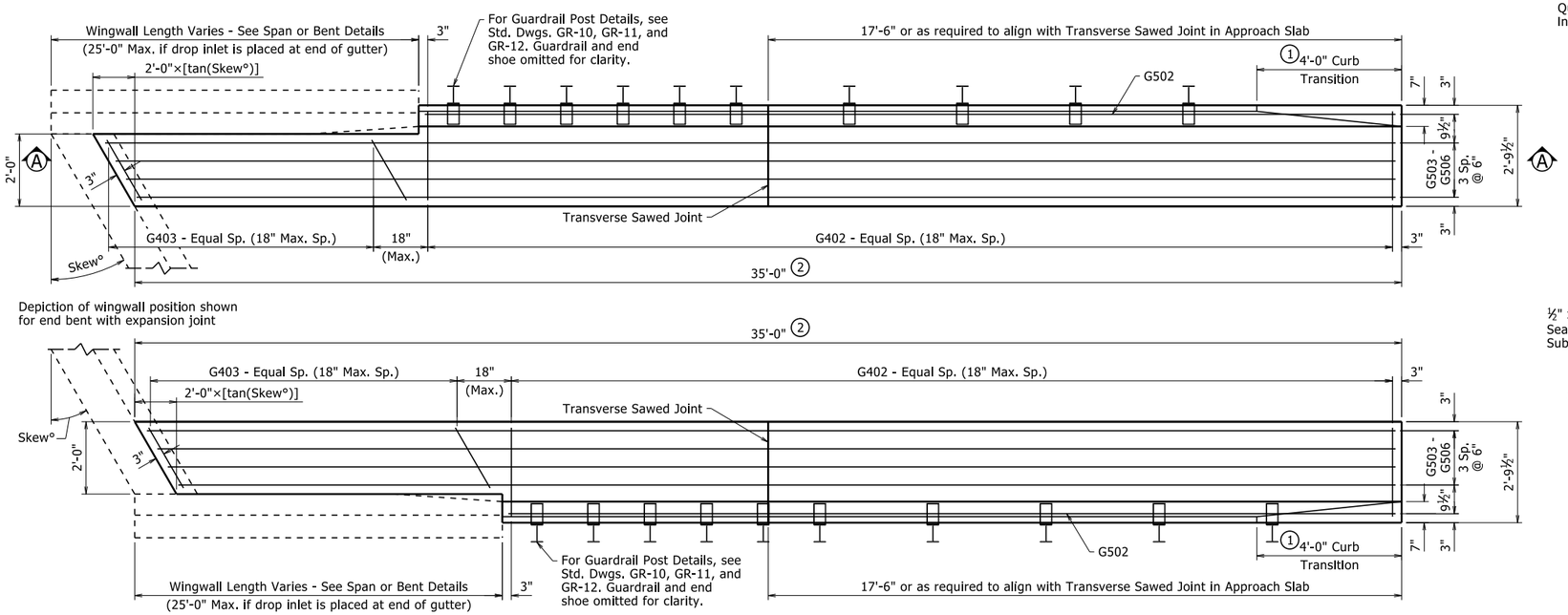

PLAN OF SKEWED APPROACH GUTTERS FOR SKEWED END BENT

½" = 1'-0"

QUANTITIES FOR ONE APPROACH GUTTER

(For Information Only)

Reinforcing Steel (Lbs.)	Concrete (Cu. Yds.)
210	4.20

Quantities are based on one gutter for a square, integral end bent and a wingwall length of 10'-0"

BAR LIST FOR ONE APPROACH GUTTER

	Mark	No. Req'd.	Length
Square End Bent	G401	(4)	1'-8"
	G402	(4)	2'-5½"
	G501	4	34'-8"
	G502	1	(4)
Skewed End Bent	G402	(4)	2'-5½"
	G403	(4)	(4)
	G502	1	(4)
	G503 - G506	1 ea.	(4)

(4) Varies with Skew and/or Wingwall Length

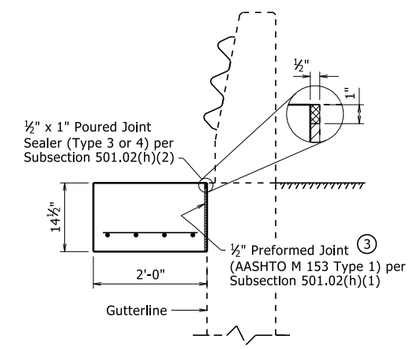

SECTION B-B

¾" = 1'-0"

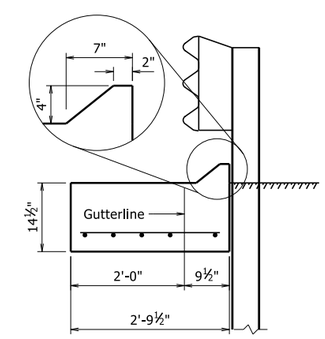

SECTION C-C

¾" = 1'-0"

(1) Construct gutter curb with height transition as shown if drop inlet is not placed at end of gutter.

Construct gutter curb full height (no height transition) if drop inlet is placed at end of gutter. Curb height transition placed on drop inlet.

(2) Adjust gutter length as necessary to avoid outlet pipe interference with guardrail post if drop inlet is placed at end of gutter.

(3) Eliminate Type 1 Preformed Joint when bridge details show reinforcing dowels across these joints. Poured joint sealer is required, however, backer rod shall be eliminated.

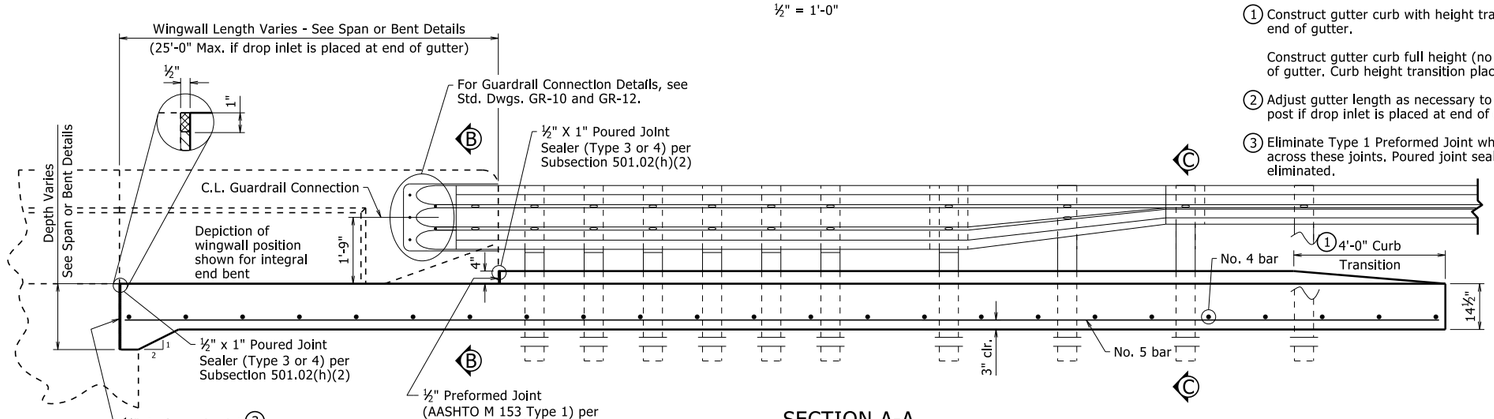

SECTION A-A

½" = 1'-0"

(Approach Gutter for Square End Bent Shown)

GENERAL NOTES

All concrete shall be Class S(AE) with a minimum 28 day compressive strength f'c = 4,000 psi and shall be poured in the dry.

All reinforcing steel shall be Grade 60 (yield strength = 60,000 psi) conforming to AASHTO M 31 or M 322, Type A, with mill test reports.

Approach Gutters will be measured and paid for in accordance with Section 504.

All longitudinal lines within the limits of horizontal curves shall be on curves concentric to C.L. Bridge. Adjustment to longitudinal bar lengths may be required. Transverse reinforcing shall be placed on radial lines to C.L. Bridge.

Scales shown are for 22"x34" drawings. When using 11"x17" drawings, reduce scale by one half.

STANDARD DETAILS FOR TYPE F APPROACH GUTTERS

ARKANSAS STATE HIGHWAY COMMISSION

LITTLE ROCK, ARK.

DRAWN BY:	NAC	DATE:	4-8-2021	FILENAME:	b55030f.dgn
CHECKED BY:	LJB	DATE:	4-8-2021	SCALE:	AS NOTED
DESIGNED BY:	STD	DATE:	-		

DRAWING NO. 55030F

PRINT DATE: 9/8/2023

DATE REVISED	DATE REVISED	FED. RD. DIST. NO.	STATE	JOB NO.	SHEET NO.	TOTAL SHEETS
		6	ARK.			

Type F Approach Slab - 55040F1

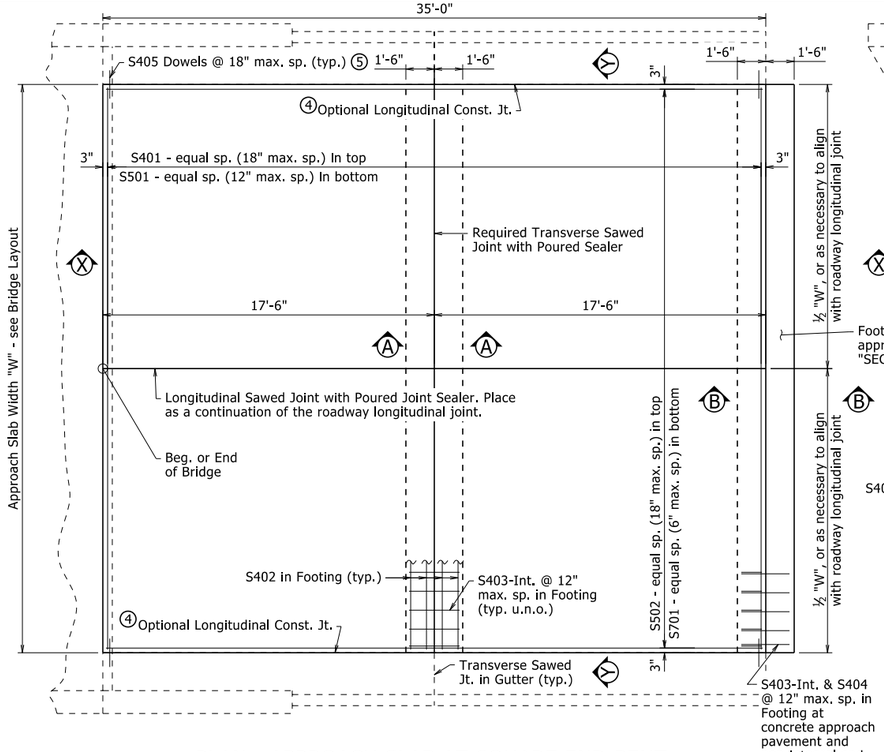

PLAN - APPROACH SLAB AT SQUARE END BENT

Integral End Bent Shown
¼" = 1'-0"

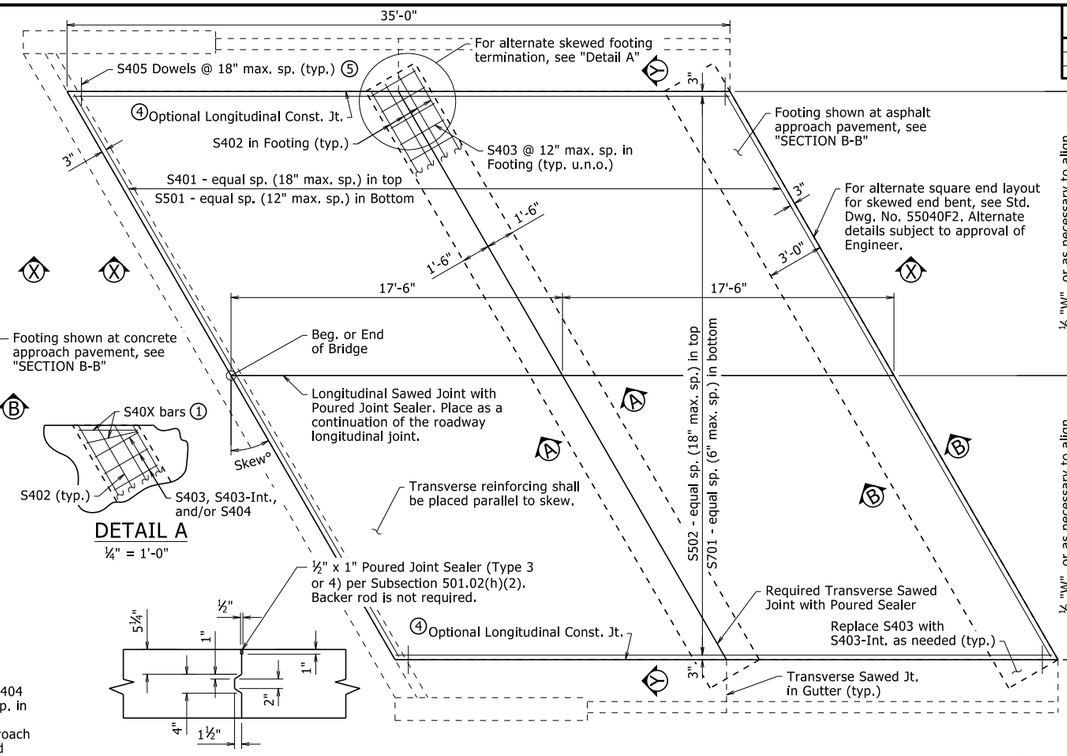

DETAIL A

¼" = 1'-0"

LONGITUDINAL CONSTRUCTION JOINT

½" = 1'-0"

PLAN - APPROACH SLAB AT SKEWED END BENT

Non-Integral End Bent Shown
¼" = 1'-0"

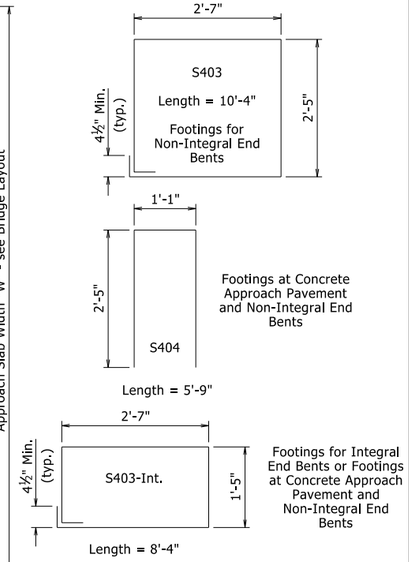

BENDING DIAGRAMS

No Scale
Dimensions are out to out of bar
2" PIn Diameter (typ.)

BAR LIST - PER APPROACH SLAB

	Square End Bent		Skewed End Bent	
Mark	No. Req'd.	Length	No. Req'd.	Length
S401	24	"W" - 0.33'	24	("W" - 0.33') / cos (Skew°)
S402	8	"W" - 0.33'	8	"W"/cos(Skew°) + 3.0'×tan(Skew°) - 0.33'
S403	①	②	①	②
S403-Int.	①	②	①	②
S404	①	②	①	②
S405	48	1'-6"	48	1'-6"
S501	36	"W" - 0.33'	36	("W" - 0.33') / cos (Skew°)
S502	①	34'-8"	①	34'-8"
S701	①	34'-8"	①	34'-8"

All bar lengths are in feet.

① Varies with Approach Slab Type, Width and/or Skew.
② See "BENDING DIAGRAMS"

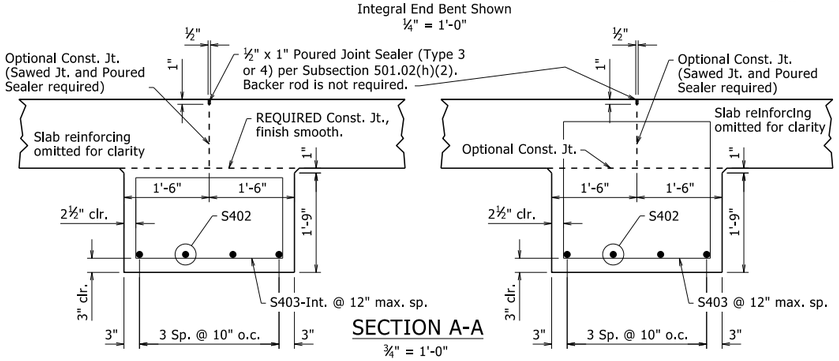

SECTION A-A

¾" = 1'-0"

INTERIOR FOOTING FOR INTEGRAL END BENT

INTERIOR FOOTING FOR NON-INTEGRAL END BENT

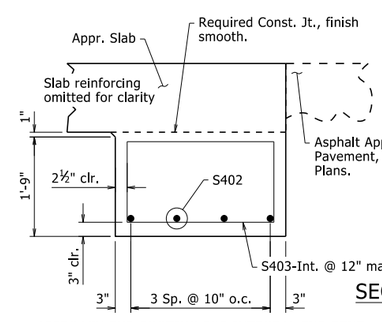

SECTION B-B

¾" = 1'-0"

APPROACH END FOOTING FOR INTEGRAL END BENT

Asphalt Approach Shown. For Concrete Approach, adjust footing location by 1'-6" to add paving notch and include expansion joint.

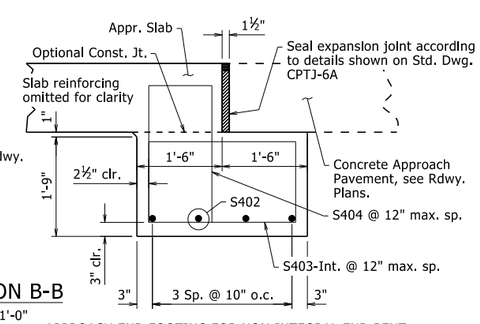

APPROACH END FOOTING FOR NON-INTEGRAL END BENT

Concrete Approach Shown. For Asphalt Approach, adjust footing location by 1'-6", omit expansion joint, and replace bars S403-Int. & S404 with S403.

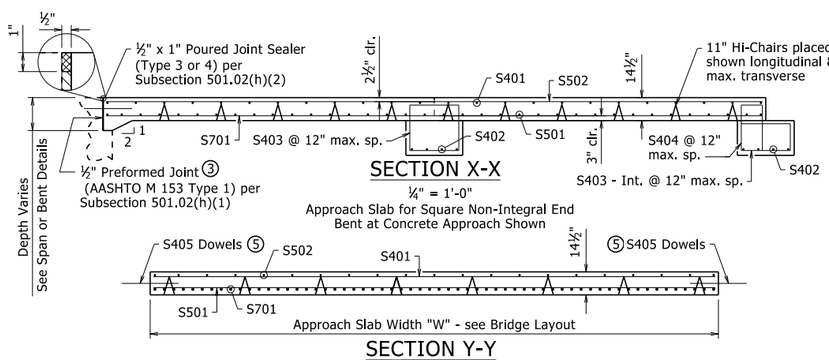

SECTION X-X

¼" = 1'-0"

Approach Slab for Square Non-Integral End Bent at Concrete Approach Shown

SECTION Y-Y

¼" = 1'-0"

GENERAL NOTES

All concrete shall be Class S(AE) with a minimum 28 day compressive strength f'c = 4,000 psi and shall be poured in the dry.

All reinforcing steel shall be Grade 60 (yield strength = 60,000 psi) conforming to AASHTO M 31 or M 322, Type A, with mill test reports.

The surface finish for Approach Slabs shall match that used on the bridge deck.

All longitudinal lines within the limits of horizontal curves shall be on curves concentric to C.L. Bridge. Adjustment to longitudinal bar lengths may be required. Transverse reinforcing shall be placed on radial lines to C.L. Bridge.

See Plans for actual Approach Slab Width, "W", end bent or span details, and approach pavement. Units of "W" are in Feet.

Approach Slabs will be measured and paid for in accordance with Section 504.

Scales shown are for full size 22"x34" drawings. When using 11"x17" drawings, reduce scale by one half.

For Table of Quantities, see "SCHEDULE OF BRIDGE QUANTITIES".

③ Eliminate Type 1 Preformed Joint when bridge details show reinforcing dowels across these joints. Poured joint sealer is required, however, backer rod shall be eliminated.

④ When construction joint is eliminated, place 1" Sawed Joint with ½" x 1" Poured Joint Sealer (Type 3 or 4) per Subsection 501.02(h)(2). Backer rod is not required.

⑤ Eliminate dowels when approach slab is adjacent to curb and gutter, or as directed by the Engineer.

MINIMUM BAR LAP LENGTH

#4	1'-8"
#5	2'-0"
#7	2'-10"

The document was originally issued and sealed by Charles R. Ellis, PE No. 9235, on September 7, 2023. This copy is not a signed and sealed document.

STATE OF ARKANSAS
LICENSED PROFESSIONAL ENGINEER
No. 9235
CHARLES R. ELLIS

BRIDGE ENGINEER

STANDARD DETAILS FOR
TYPE F APPROACH SLAB

ARKANSAS STATE HIGHWAY COMMISSION

LITTLE ROCK, ARK.

DRAWN BY:	CGP	DATE:	05/12/2023	FILENAME:	b55040f.dgn
CHECKED BY:	JYP	DATE:	05/15/2023	SCALE:	AS NOTED
DESIGNED BY:	STD.	DATE:	-		

DRAWING NO. 55040F1

DATE REVISED	DATE FILMED	DATE REVISED	DATE FILMED	FED. ROAD DIST. NO.	STATE	FED. AID PROJ. NO.	SHEET NO.	TOTAL SHEETS
09/27/2022				6	ARK.			
				JOB NO.				

1 TYPE SSTR36 - 55070

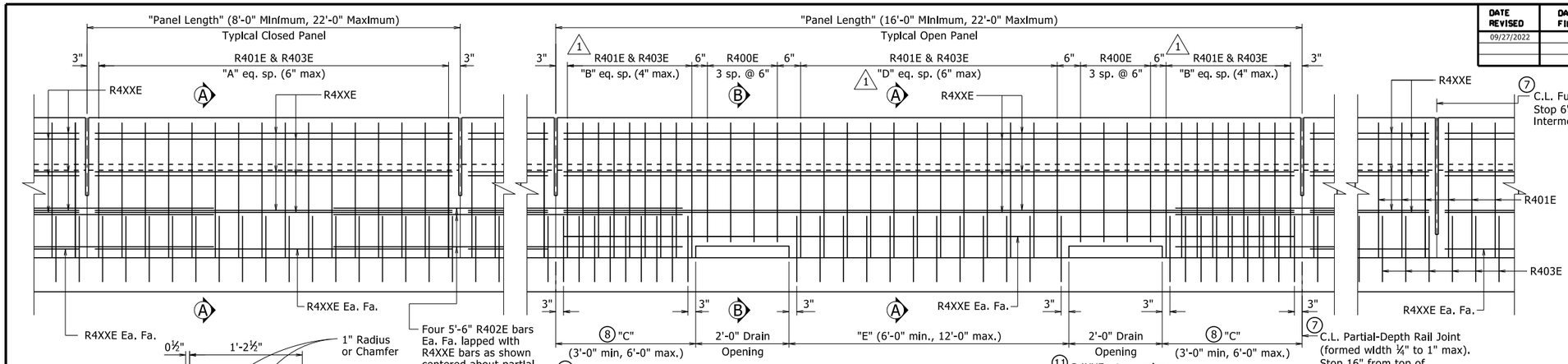

1 ELEVATION - SINGLE SLOPE TRAFFIC RAIL

¾" = 1'-0"

1. All measurements shown are along gutterline at base of rail.
2. Minimum embedment into deck/slab.
3. Eliminate recess when formliner with architectural finish is used. See Plans for additional information.
4. C.L. 1" ø formed holes for ⅞" ø bolts. See Standard Drawings GR-10 and GR-12 for additional information.
5. Only applicable for bridges with rail cast directly on bridge deck/slab surface. Increase height as necessary for sidewalks, see Plans for additional information.
6. Field bend front leg of R401E bar as required to maintain minimum 1½" front face clearance within limits of taper.
7. When optional slip forming is used: to control cracking, all rail joints must be V-grooved around the perimeter of the rail prior to concrete set and sawing. Depth of V-groove shall be ½". Sawing of the joints shall be done as soon as practical to a width of ¼", and must be controlled so it will follow the V-Groove.
8. End posts shall be the same length within a panel.

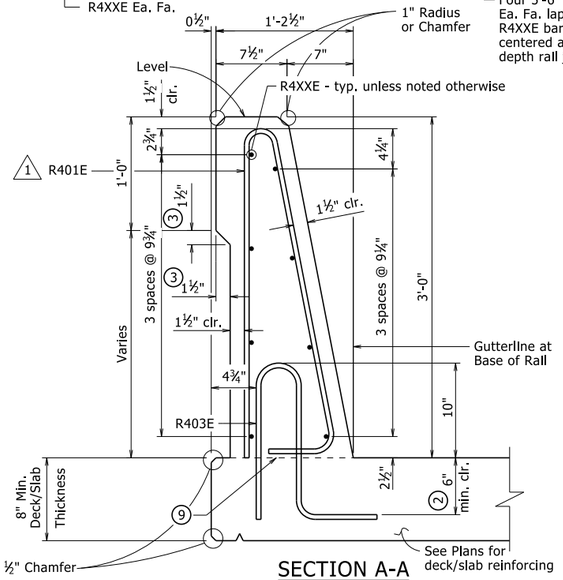

SECTION A-A

1½" = 1'-0"

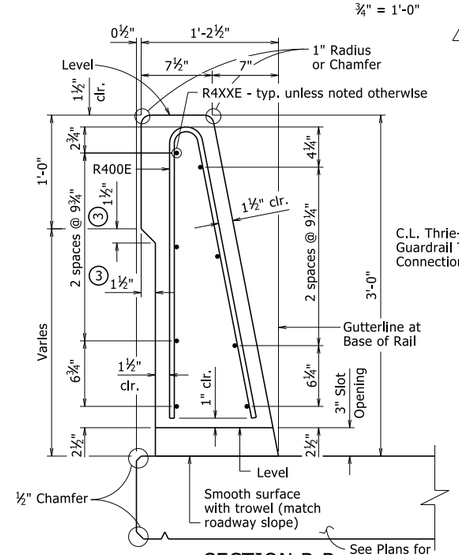

SECTION B-B

1½" = 1'-0"

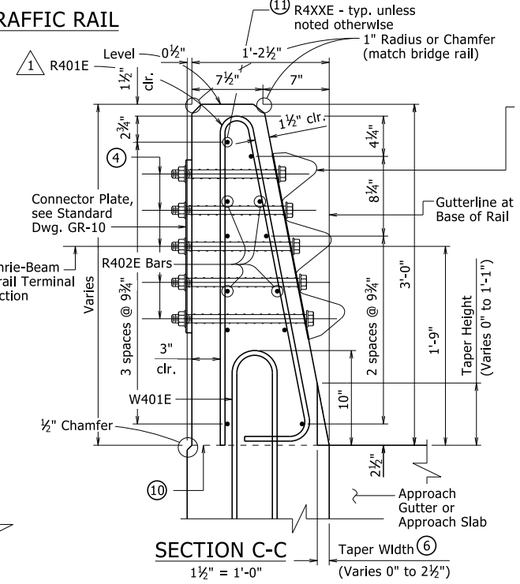

Bolt Special End Shoe to face of rail as shown. Tapered washers are not required between the head of the bolts and the sloped face of the rail. Tighten the five terminal connection bolts in a well distributed pattern to prevent damage or distortion of the thrie-beam connection. Cut bolts off after installation so as to extend no more than ¾" beyond nut. Paint ends of cut-off bolts with zinc-rich paint. This work and material will not be paid for directly but shall be considered subsidiary to associated contract items.

SECTION C-C

1½" = 1'-0"

BENDING DIAGRAM

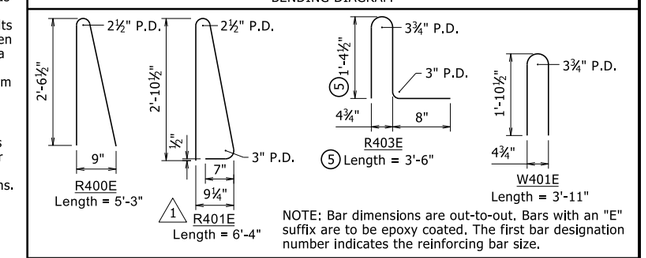

NOTE: Bar dimensions are out-to-out. Bars with an "E" suffix are to be epoxy coated. The first bar designation number indicates the reinforcing bar size.

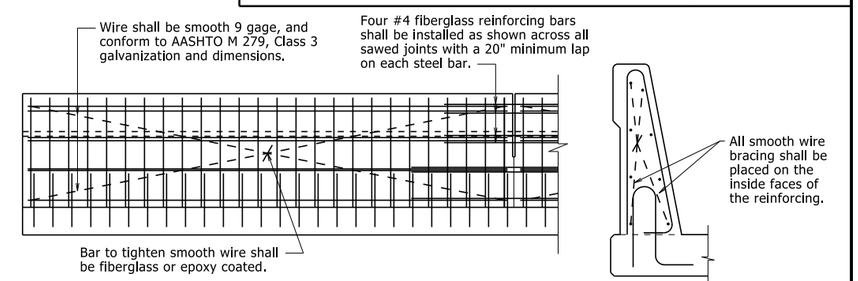

The extruded rail shall conform to the horizontal and vertical lines shown on the plans or as directed by the Engineer and shall present a smooth, uniform appearance and texture. Unless otherwise noted, exposed surfaces may be given a light brush finish or a Class 3, Textured Coating Finish in place of Class 2, Rubbed Finish.

All panels shall be braced as required to prevent racking.

Slip forming will not be allowed on bridges where formliner with architectural treatment is used unless approval from the Engineer is obtained.

DETAILS OF OPTIONAL SLIP FORMING OF BRIDGE TRAFFIC RAIL

No Scale

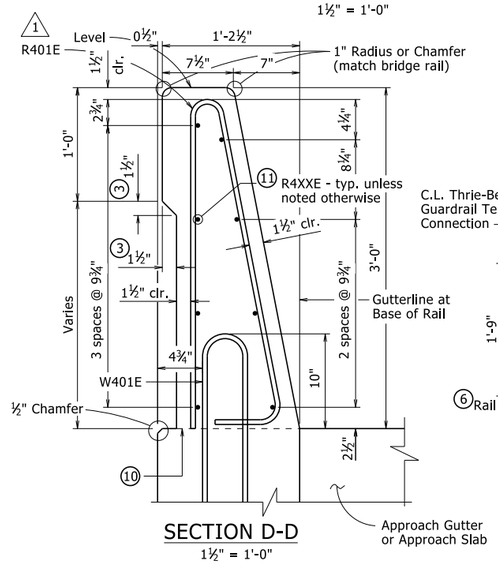

SECTION D-D

1½" = 1'-0"

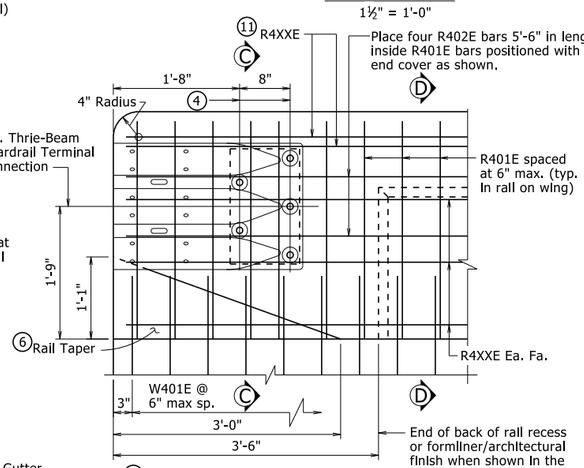

1 RAIL TERMINUS DETAILS

1" = 1'-0"

9 Required Construction Joint. Level where water flows away from rail, match roadway slope where water flows toward rail.

10 Top of Abutment Wing & Required Construction Joint (match bridge deck/slab construction joint slope). See Plans for Wing reinforcing.

11 These bars will not be included in the "Table of Variables". See Plans for details.

TABLE OF VARIABLES

Closed Rail Panels			Open Rail Panels					
Panel Length	A	R4XXE	Panel Length	B	C	D	E	R4XXE

See Plans for table with values.

GENERAL NOTES

This rail has been successfully evaluated by full-scale crash test to meet MASH TL-4 criteria.

Details shown are general for bridges without sidewalks. See Plans for additional details and requirements specific to bridges with sidewalks.

For Table of Variables, Rail Bar List, locations of Full and Partial Depth Rail Joints, and Wing & Rail Bar Lists, see Plans.

For location of drain openings, see Plans. Drain openings shown are not applicable for bridges with sidewalks. Drain openings will not be allowed over Railroad Right of Way, travelled roadways, and protected waterways.

Rail Terminus details, including Rail Taper, are not applicable for bridges with sidewalks or when bridge railing is continuous with roadway railing.

Scales shown are for 22"x34" drawings. When using 11"x17" drawings, reduce scale by one half.

1 Modified bending diagram and spacing for R401E bar.

By: CGP, Checked by: CMW 09/27/2022

This document was originally issued and sealed by Charles R. Ellis, PE No. 9235, on November 5, 2020. This copy is not a signed and sealed document.

STATE OF ARKANSAS
LICENSED PROFESSIONAL ENGINEER
No. 9235
CHARLES R. ELLIS

BRIDGE ENGINEER

THESE DETAILS ARE APPLICABLE UNLESS OTHERWISE SHOWN IN THE PLAN DETAILS, SPECIAL PROVISIONS, OR SUPPLEMENTAL SPECIFICATIONS.

STANDARD DETAILS FOR BRIDGE TRAFFIC RAIL TYPE SSTR36

ARKANSAS STATE HIGHWAY COMMISSION

LITTLE ROCK, ARK.

DRAWN BY:	KWY	DATE:	11/5/2020	FILENAME:	b55070.dgn
CHECKED BY:	LJB	DATE:	11/5/2020	SCALE:	As Noted
DESIGNED BY:	STD.	DATE:	-----		

DRAWING NO. 55070

PRINT DATE: 10/6/2022

REFER TO TABULATION OF QUANTITIES FOR "W" & "B" DIMENSIONS

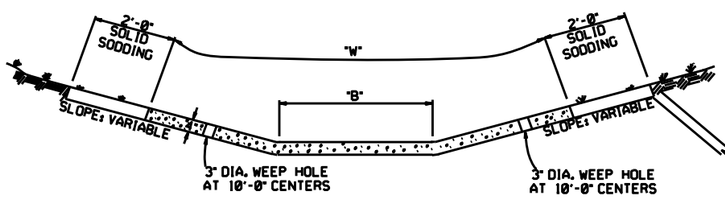

TYPE A

EXCAVATE TO NEAT LINES TO CONSTRUCT DITCH PAVING AND SOLID SODDING.

REFER TO TABULATION OF QUANTITIES FOR "W" DIMENSIONS

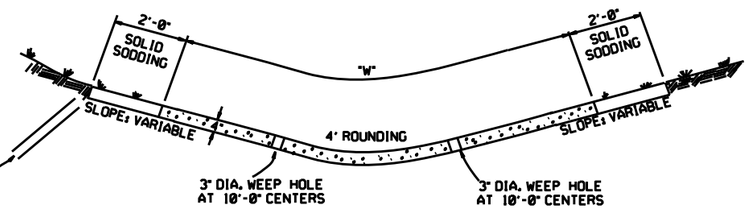

TYPE B

THE STEEL AND ADDITIONAL CONCRETE FOR THE WALLS SHALL NOT BE PAID FOR DIRECTLY, BUT SHALL BE CONSIDERED TO BE INCLUDED IN THE PRICE BID FOR "CONCRETE DITCH PAVING."

TOE WALL DEPTH MAY BE ALTERED TO 1'-0" WHEN DIRECTED BY THE ENGINEER IN ROCK EXCAVATION

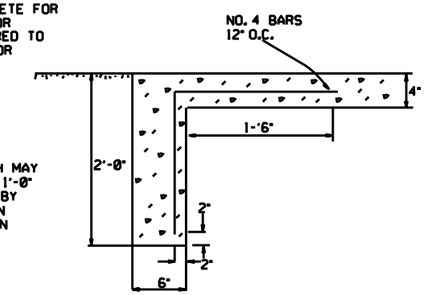

TOE WALL DETAIL FOR CONCRETE DITCH PAVING

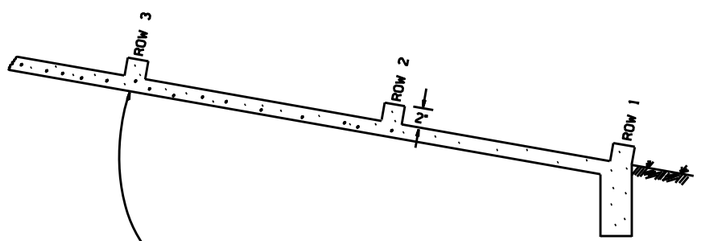

NUMBER OF ELEMENTS PER ROW VARIES WITH WIDTH OF PAVING SPECIFIED

ENERGY DISSIPATORS TO BE USED FOR THE ENTIRE LENGTH OF DITCH WHEN SLOPE OF DITCH PAVING EXCEEDS 7%. THE DISSIPATORS WILL NOT BE PAID FOR DIRECTLY, BUT SHALL BE CONSIDERED TO BE INCLUDED IN THE PRICE BID FOR CONCRETE DITCH PAVING.

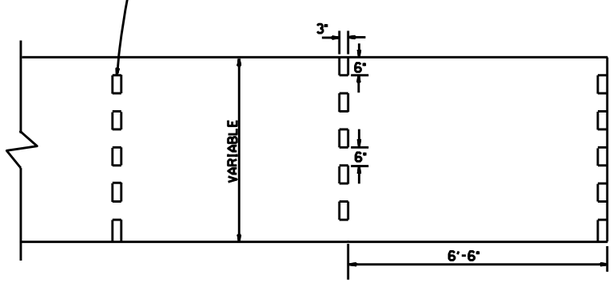

ENERGY DISSIPATORS
(NO SCALE)

GENERAL NOTES:

THE FULL WIDTH OF EACH SECTION SHALL BE POURED MONOLITHICALLY.

TOE WALLS TO BE CONSTRUCTED FULL WIDTH AT EACH END OF DITCH PAVING, AND POURED MONOLITHICALLY.

SOLID SOD ALONG DITCH PAVING TO BE PLACED WITHIN 14 DAYS OF DITCH PAVING CONSTRUCTION.

1" WIDE TRANSVERSE EXPANSION JOINTS SHALL BE PLACED IN CONCRETE DITCH PAVING AT 45' INTERVALS. THE SPACE SHALL BE FILLED WITH APPROVED JOINT FILLER COMPLYING WITH AASHTO M213.

DATE	REVISION	DATE FILMED
12-8-16	CORRECTED ENERGY DISSIPATOR DRAWING AND NOTE	
11-17-10	ADDED GENERAL NOTE	
6-2-94	ADDED GENERAL NOTE ABOUT SOLID SODDING	
11-30-8	ELIMINATED MIN. ROWS OF ELEMENTS	111-30-89
7-15-88	REVISED DISSIPATOR NOTE	653-7-15-88
4-3-87	REVISED ENERGY DISSIPATOR	671-4-3-87
1-9-87	MODIFIED NOTE ON ENERGY DISS.	532-1-9-87
11-3-86	ADDED NOTE TO ENERGY DISS.	599-12-1-86
11-1-84	ENERGY DISSIPATOR DETAILS ADDED	508-11-1-84
11-1-84	EXCAVATION DETAILS ADDED TYPED A & B	
10-2-72	REVISED AND REDRAWN	508-10-2-72

ARKANSAS STATE HIGHWAY COMMISSION

CONCRETE DITCH PAVING

STANDARD DRAWING CDP-1

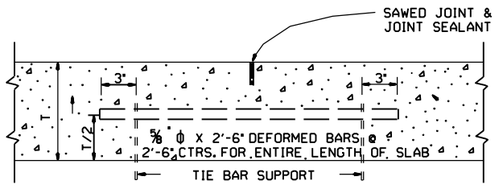

LONGITUDINAL JOINT

NOTE: THE TIE BAR SUPPORT SHOWN ABOVE MAY BE ELIMINATED IF OTHER APPROVED METHODS FOR PLACING AND SUPPORTING THE TIE BARS ARE PROVIDED.
TIE BARS SHALL BE 15" FROM TRANSVERSE JOINTS.

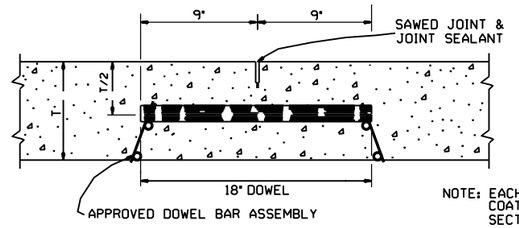

NOTE: EACH DOWEL TO BE COATED ACCORDING TO SECTION 502 OF THE STANDARD SPECIFICATIONS.

ROUND STEEL BAR DOWEL
1¼" DIA. WHEN T<10"
1½" DIA. WHEN T≥10"

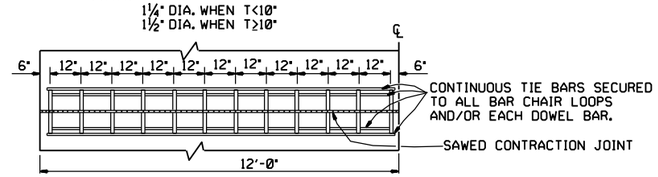

ONE-HALF 24' PAVEMENT
12 DOWELS
PLAN

NOTE: FOR 20' PAVEMENT USE 20 DOWELS @ 12" CTRS. WITH 6" SPACING FROM C.L. AND EDGE OF SLAB TO FIRST BAR.
FOR 15' PAVEMENT USE 15 DOWELS @ 12" CTRS. WITH 6" SPACING FROM C.L. AND EDGE OF SLAB TO FIRST BAR.
FOR 26' PAVEMENT USE 26 DOWELS @ 12" CTRS. WITH 6" SPACING FROM C.L. AND EDGE OF SLAB TO FIRST BAR.
FOR PAVEMENT WIDTHS OTHER THAN THOSE SHOWN ABOVE, USE DOWELS AT 12" CTRS. WITH 6" MAX. SPACING FROM C.L. TO FIRST BAR. DISTANCE FROM EDGE OF SLAB TO FIRST BAR SHALL BE ADJUSTED TO MAINTAIN 12" DOWEL BAR SPACING

CONTRACTION JOINT DETAILS

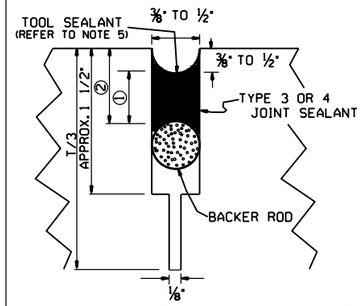

DETAIL OF SAWED CONTRACTION JOINT

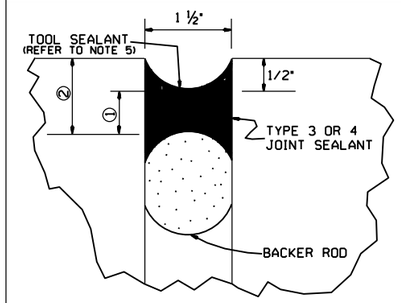

DETAIL OF EXPANSION JOINT

JOINT CONFIGURATION FOR TYPE 3 OR 4 JOINT SEALANT

JOINT WIDTH	SEALANT THICKNESS ①	BACKER ROD DIAMETER	BACKER ROD PLACEMENT DEPTH ②
INCHES			
¼	¼	⅜	½
⅜	¼	½	½
½	¼	⅝	½
⅝	5/16	¾	7/16
¾	⅜	⅞	⅞
1 ½	¾	2	1 ¼

JOINT CONFIGURATION FOR TYPE 5 JOINT SEALANT

JOINT WIDTH	SEALANT THICKNESS ①	BACKER ROD DIAMETER	BACKER ROD PLACEMENT DEPTH ②
INCHES			
¼	½	⅜	¾
⅜	¾	½	1

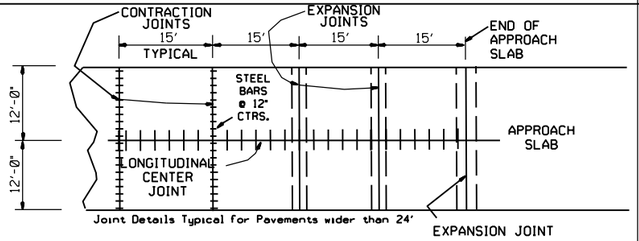

PLAN SHOWING EXPANSION JOINTS AT BRIDGE APPROACH SLABS

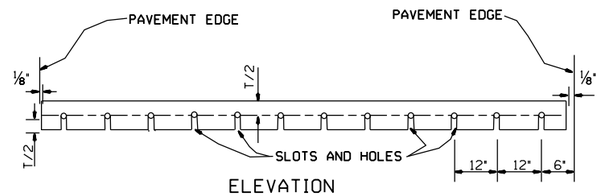

ELEVATION

NOTE: ALL DOWEL BARS SHALL CONFORM TO THE DETAILS FOR CONTRACTION JOINTS.

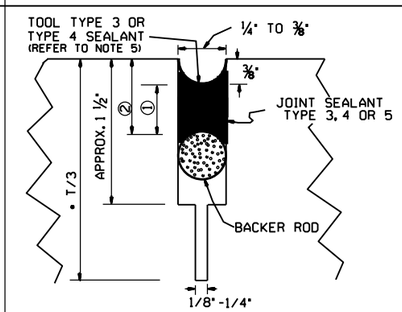

*NOTE: T/3 SAW CUT NOT REQUIRED FOR LONGITUDINAL CONSTRUCTION JOINT.

DETAIL OF SAWED
LONGITUDINAL JOINT
AND LONGITUDINAL CONSTRUCTION JOINT

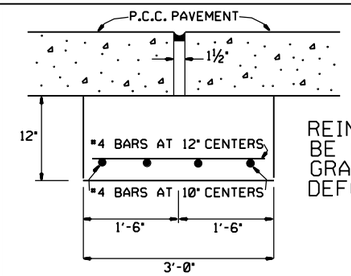

REINFORCING SHALL BE GRADE 40 OR GRADE 60 DEFORMED BARS.

DETAIL OF JOINT SUPPORT
FOR EXPANSION JOINTS

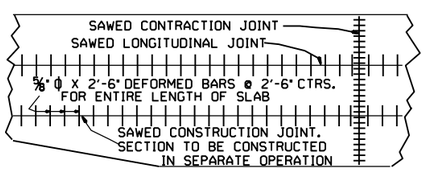

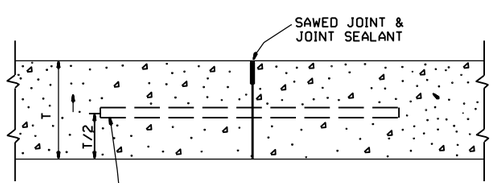

NOTE: TIE BARS SHALL BE 15" FROM TRANSVERSE JOINTS.

LONGITUDINAL CONSTRUCTION JOINT

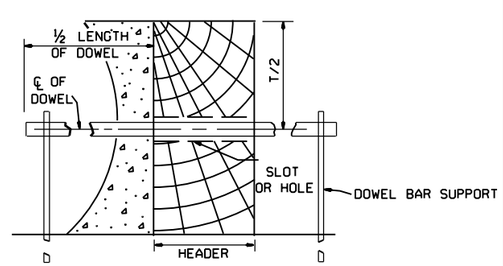

SECTION

TRANSVERSE
CONSTRUCTION JOINT

DATE	REVISION	DATE FILMED
11-07-19	REV. EXP. JOINT REF ON APP. SLAB	
5-25-06	ADDED GENERAL NOTE 7	
10-9-03	REMOVED TIE BAR COATING & REVISED GENERAL NOTES	
11-16-01	ADDED TOOL SEALANT AND NOTE 5; REVISED NOTE 3	
4-26-96	REVISED CONTRACTION JOINT NOTE	
11- 3-94	ADDED NOTE RE: REINF. BARS	
4- 1-93	REVISED DOWEL BARS & GEN. NOTES	4- 1-93
10- 1-92	REVISED DOWEL SPACING	10- 1-92
8- 15-91	ADDED SPAC FOR CONTR JTS & DEL KEYWAY	
05-24-90	REVISED TIE BAR, DOWEL & JOINT SIZE	
01-25-90	ADDED EXPANSION JOINT	01-25-90
11-30-89	CHANGED T/4+1 TO T/3+1	11-30-89
03-23-89	ALTERED SAWED JOINT & ADDED NOTE	512-03-23-89
07-15-88	REVISED AND REDRAWN	632-07-15-88

GENERAL NOTES

1. "T" DENOTES THICKNESS OF SLAB.
2. DOWEL BARS SHALL BE PLACED IN ACCORDANCE WITH THE DIMENSIONS SHOWN. A TOLERANCE OF PLUS OR MINUS ONE INCH WILL BE ALLOWED FOR THE VERTICAL AND LATERAL PLACEMENT AND A TOLERANCE OF PLUS OR MINUS ¼" WILL BE ALLOWED FOR THE TILT AND SKEW. DOWEL BARS SHALL BE FIELD COATED FOR A MINIMUM DISTANCE OF 2" GREATER THAN HALF THE LENGTH OF THE BAR WITH AN APPROVED GREASE AS A BOND BREAKER JUST PRIOR TO PLACEMENT OF CONCRETE.
3. THE EXPANSION JOINT SUPPORT MAY BE CONSTRUCTED WITH CLASS "A", "S" OR PAVING CONCRETE. PAYMENT FOR THE JOINT SUPPORT SHALL BE FOR THE CONTRACT UNIT PRICE BID FOR THE CLASS OF CONCRETE SPECIFIED IN THE PLANS. PAYMENT FOR ALL OTHER WORK AND MATERIALS REQUIRED FOR THE CONSTRUCTION OF THE JOINT SUPPORT SHALL BE INCLUDED IN THE PRICE BID FOR THE ABOVE ITEMS.
4. CONTRACTION JOINTS SHALL BE CONSTRUCTED ON 15' CENTERS.
5. TOOLING NOT REQUIRED FOR SELF-LEVELING SILICONE.
6. UNLESS OTHERWISE SPECIFIED IN THE PLANS, CONCRETE SHOULDERS SHALL BE CONSTRUCTED ACCORDING TO THE DETAILS SHOWN HEREON. CONTRACTION JOINTS SHALL MATCH CONTRACTION JOINTS IN THE LANES.
7. TIE WIRES IN DOWEL BAR ASSEMBLIES SHALL NOT BE CUT PRIOR TO PLACEMENT OF PAVING CONCRETE.

ARKANSAS STATE HIGHWAY COMMISSION

TRANSVERSE & LONGITUDINAL JOINTS
FOR CONCRETE PAVEMENT (NON-REINFORCED)

STANDARD DRAWING CPTJ - 6A

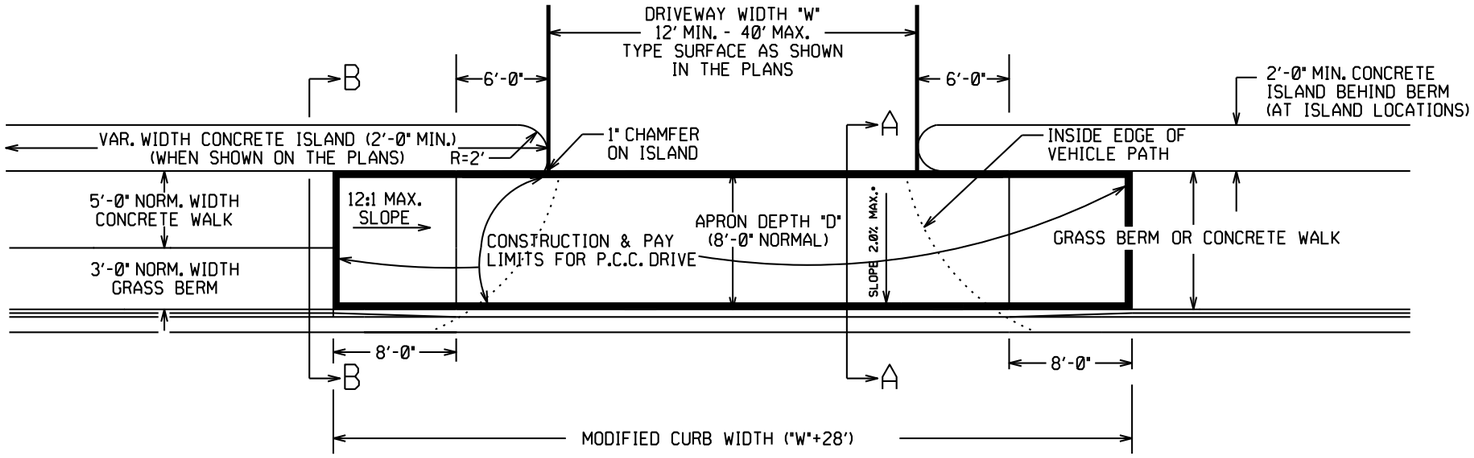

PLAN VIEW

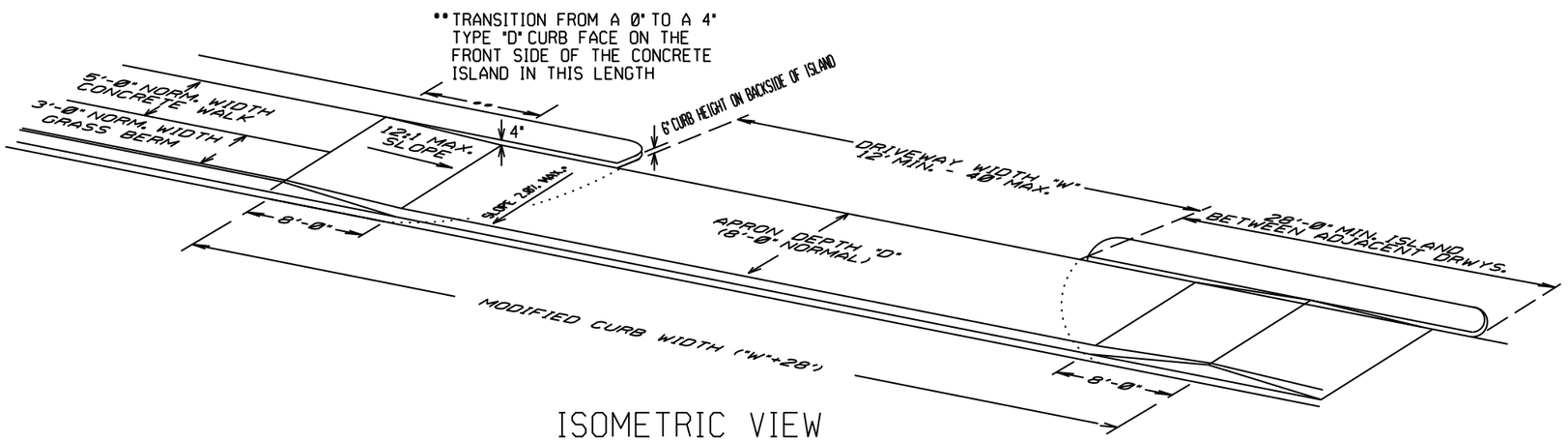

ISOMETRIC VIEW

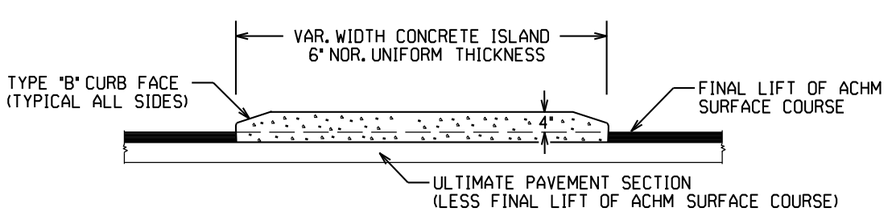

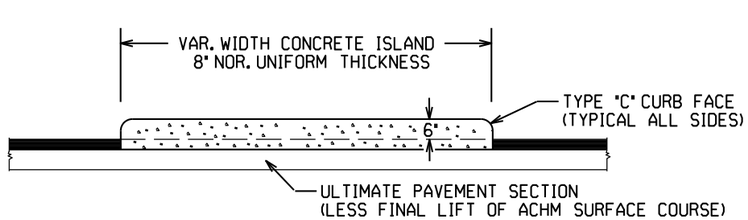

CURBED ISLANDS FOR CHANNELIZATION

CONCRETE ISLAND NOTES:

1. REFER TO PLANS FOR TYPE OF CURB FACE TO BE USED. NO DIRECT PAYMENT WILL BE MADE FOR THE CURB FACES SHOWN ON THE ISLAND DETAILS. PAYMENT FOR THE CURB FACE WILL BE INCLUDED IN THE UNIT PRICE BID FOR THE ITEM "CONCRETE ISLAND".

2. TRANSVERSE EXPANSION JOINTS, NOT LESS THAN 1/2" WIDE, SHALL BE PLACED AT MINIMUM INTERVAL OF 45'. TRANSVERSE JOINT SHALL BE CONSTRUCTED USING A JOINT FILLER COMPLYING WITH AASHTO M213.

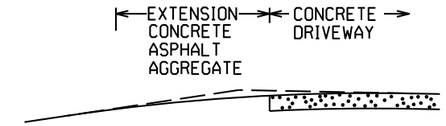

EXTENSION TYPICAL SECTIONS

1: CONCRETE - 6" P.C. CONCRETE DRIVEWAY

2: ASPHALT - 2" ACHM SURFACE COURSE (1/2")
4" ACHM BINDER COURSE (1") OR
4" ACHM BASE COURSE (1-1/2")

3: ASPHALT - 2" ACHM SURFACE COURSE (1/2")
7" AGGREGATE BASE COURSE

4: AGGREGATE - 6" AGGREGATE BASE COURSE

THE TYPE OF EXTENSION SHALL BE AS SHOWN IN THE PLANS. THE CONTRACTOR MAY, WITH THE APPROVAL OF THE ENGINEER, SUBSTITUTE A LOWER NUMBERED TYPE OF EXTENSION IN LIEU OF THE TYPE SPECIFIED IN THE PLANS, BUT AT NO ADDITIONAL COST TO THE DEPARTMENT.

DRIVEWAY EXTENSION DETAILS

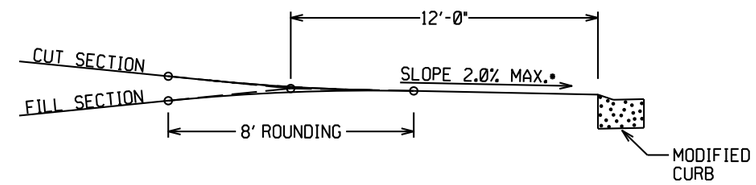

DRIVEWAY VERTICAL ALIGNMENT DETAILS

• NOTE: DRIVEWAYS MAY NOT BE SLOPED AWAY FROM THE ROADWAY UNLESS APPROVED BY THE ENGINEER.

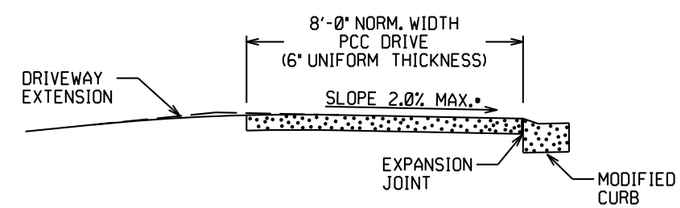

SECTION A-A

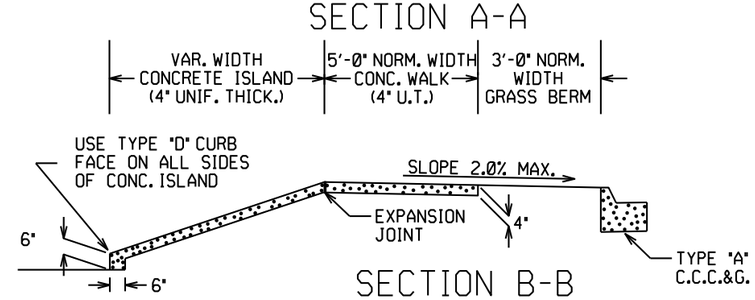

SECTION B-B

CURBED ISLAND BEHIND WALK

DATE REV	DATE FILMED	DESCRIPTION
5-19-22		REVISED ISLAND NOTES
11-07-19		REVISED WALK DETAILS
2-27-14		REVISED PLAN & ISOMETRIC VIEW
11-29-07		ADDED CHANNELIZATION ISLAND WITH TYPE C CURB FACE & REVISED DRIVEWAY SLOPE NOTE & VERTICAL ALIGNMENT DETAIL
11-10-05		REV. APRON SLOPE & DEPTH OF AGG. BASE.
8-22-02		ADDED ISLAND DETAILS & NOTES
3-30-00		REV. MOD. CURB WIDTH & TRANS. NOTE
11-19-98		REVISED NOTES
11-18-98		REDRAWN AND REISSUED

ARKANSAS STATE HIGHWAY COMMISSION

DETAILS OF DRIVEWAYS & ISLANDS

STANDARD DRAWING DR-1

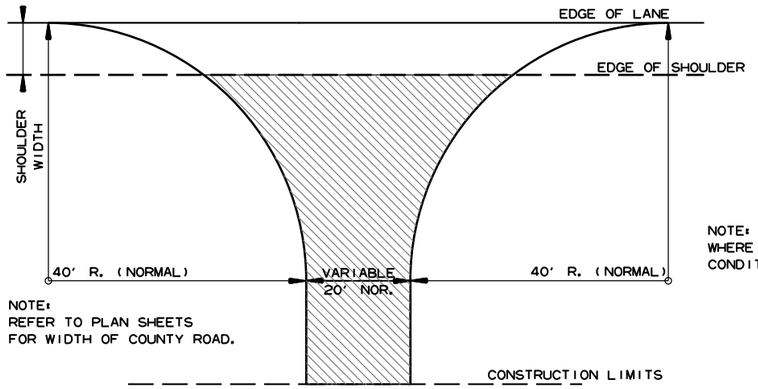

NOTE:
REFER TO PLAN SHEETS
FOR WIDTH OF COUNTY ROAD.

NOTE: TURNOUTS SHALL BE MODIFIED WHERE NECESSARY TO MEET LOCAL CONDITIONS AS DIRECTED BY THE ENGINEER.

ACHM SURFACE COURSE (1/2") (220 LBS. PER SQ. YD.) AND AGGREGATE BASE COURSE (CLASS 7) 7" COMP. DEPTH, UNLESS OTHERWISE SPECIFIED IN PLANS.

DETAIL FOR COUNTY ROAD TURNOUTS OPEN SHOULDER SECTION

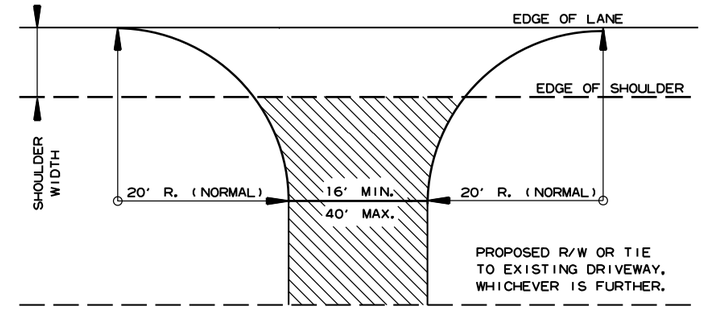

NOTE: TURNOUTS AND PRIVATE DRIVES SHALL BE MODIFIED WHERE NECESSARY TO MEET LOCAL CONDITIONS AS DIRECTED BY THE ENGINEER.

ACHM SURFACE COURSE (1/2") (220 LBS. PER SQ. YD.) AND AGGREGATE BASE COURSE (CLASS 7) 7" COMP. DEPTH IF ASPHALT OR GRAVEL DRIVE EXISTING; OR 6" CONCRETE IF CONCRETE DRIVE EXISTING.

DETAIL FOR DRIVEWAY TURNOUTS OPEN SHOULDER SECTION (ARTERIALS)

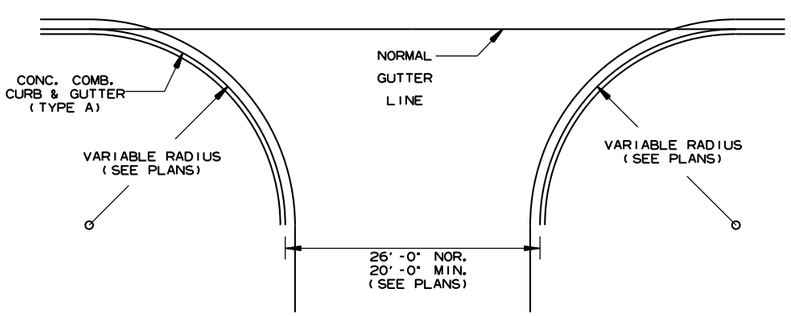

NOTE:
PAVEMENT STRUCTURE FOR STATE HIGHWAYS, CITY STREETS, & COUNTY ROADS TO BE SAME AS MAIN LANES.

DETAIL OF TURNOUTS, ASPHALT STREETS, COUNTY ROADS & STATE HIGHWAYS CURB & GUTTER SECTION

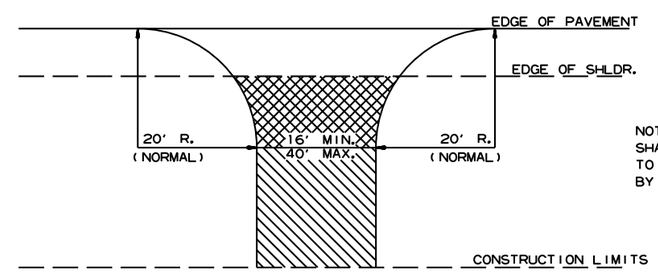

NOTE: TURNOUTS AND PRIVATE DRIVES SHALL BE MODIFIED WHERE NECESSARY TO MEET LOCAL CONDITIONS AS DIRECTED BY THE ENGINEER.

ASPHALT CONCRETE HOT MIX SURFACE COURSE (220 LBS. PER SQ. YD.) AGGREGATE BASE COURSE (CLASS 7) 7" COMP. DEPTH IF ASPHALT DRIVE EXIST OR 6" CONCRETE IF CONCRETE DRIVE EXIST.

AGGREGATE BASE COURSE (CLASS 7) 9" COMP. DEPTH OR CONFORM TO EXISTING DRIVEWAY

DETAIL FOR DRIVEWAY TURNOUTS (COLLECTORS)

DATE REV	DATE FILMED	DESCRIPTION
5-19-22		ISSUED

ARKANSAS STATE HIGHWAY COMMISSION

DETAILS OF DRIVEWAYS & STREET TURNOUTS

STANDARD DRAWING DR-2

PLAN

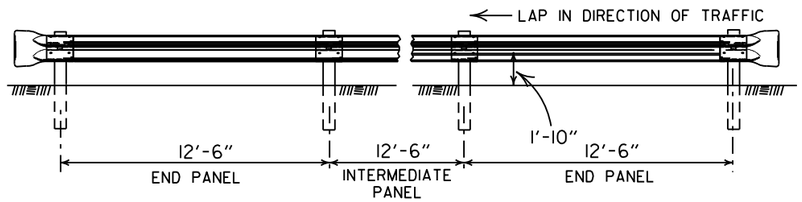

ELEVATION

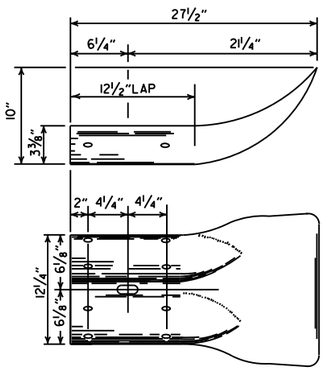

TERMINAL SECTION

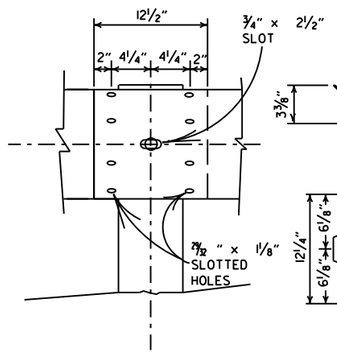

RAIL SPLICE

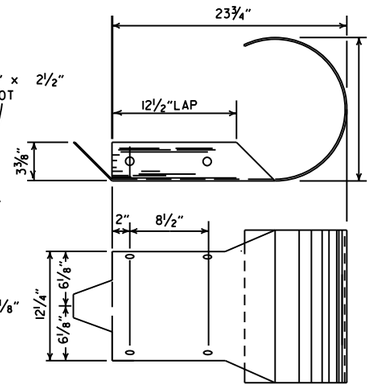

TERMINAL SECTION

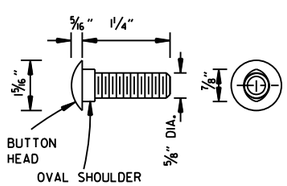

SPLICE BOLT

NOTE: POST BOLT SAME EXCEPT LENGTH.

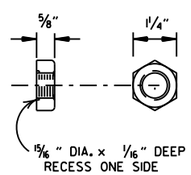

NUT

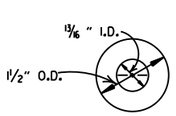

CUT STEEL WASHER

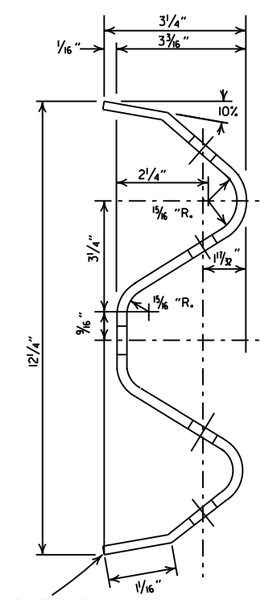

SECTION THRU RAIL

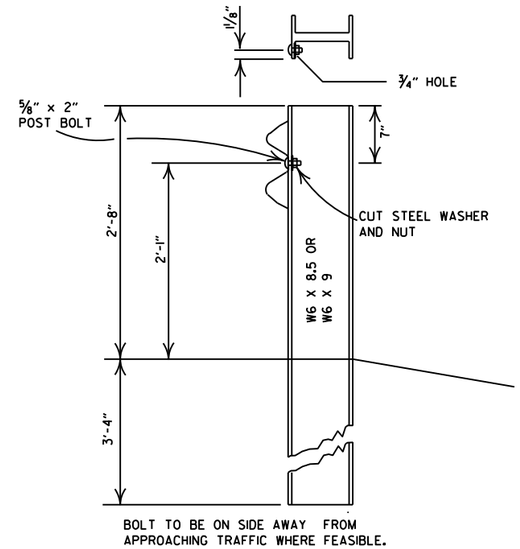

STEEL POST

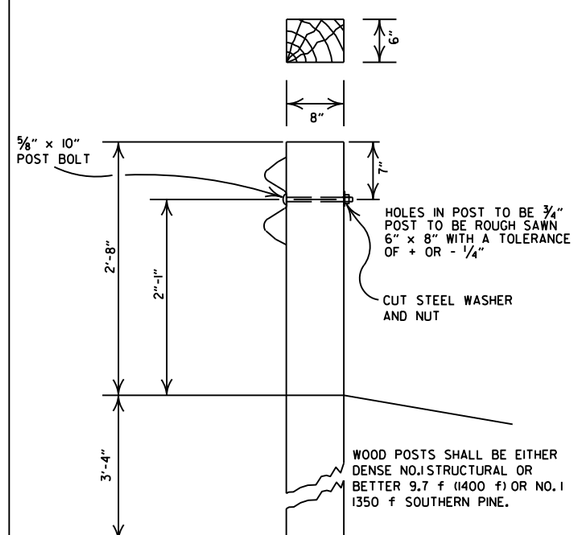

WOOD POST

DETAILS OF POST CONNECTIONS

DATE	REVISION	FILMED
11-07-19	RENUMBERED AND RENAMED	
11-16-17	REVISED GUARDRAIL HEIGHT	
07-14-10	RAISED HEIGHT OF GUARDRAIL 1"	
08-22-02	REVISED DIMENSION ON STEEL POST	
11-16-01	REVISED STEEL AND WOOD POST	
08-12-98	REMOVED CONCRETE POST	
10-18-96	CHANGED WOOD POST NOTE	10-18-96
06-02-94	ADDED ALTERNATE STEEL POST SIZE	
08-05-93	REVISED STEEL POSTS SIZE	8-5-93
08-15-91	DELETE STEEL PLATE WASHER & ADDED TYPE C TO TITLE	8-15-91
10-30-87	REMOVED DET. PLCMNT. ON HWY.	555-11-20-87
01-04-83	GRADE FOR WOOD POSTS	679-1-4-83
10-01-77	HARDENED WASHER	922-10-1-72
10-02-72	REVISED & REDRAWN	521-10-2-72

ARKANSAS STATE HIGHWAY COMMISSION

GUARDRAIL DETAILS (TYPE C)
STREET / ROAD BARRICADE OR
TEMPORARY INSTALLATION

STANDARD DRAWING GR-5

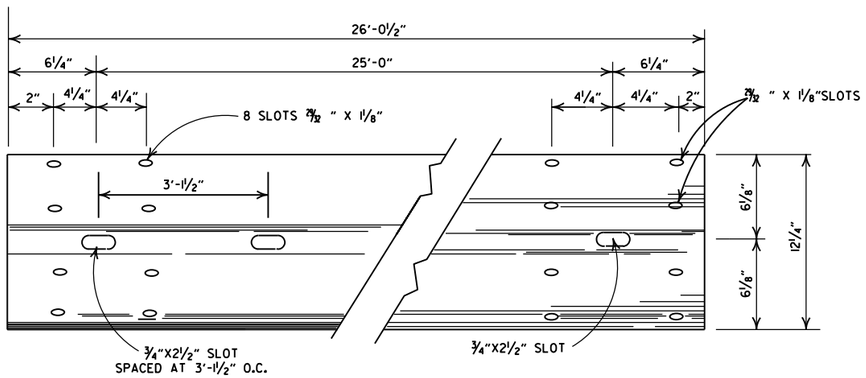

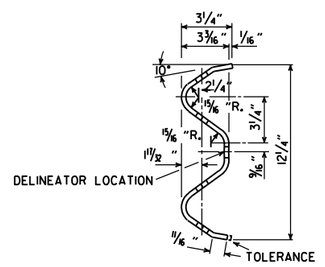

DETAILS OF W-BEAM GUARDRAIL

RAIL SECTION OF CLOSELY SIMILAR DIMENSIONS AND COMPARABLE STRENGTH MAY BE SUBSTITUTED IF APPROVED BY THE ENGINEER.

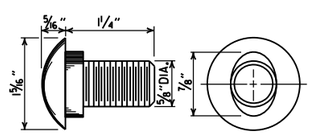

SPLICE BOLT
POST BOLT - SAME EXCEPT LENGTH

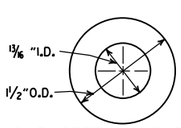

CUT STEEL WASHER

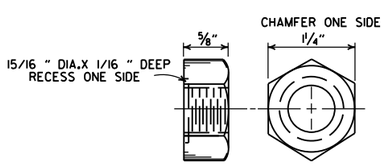

NUT

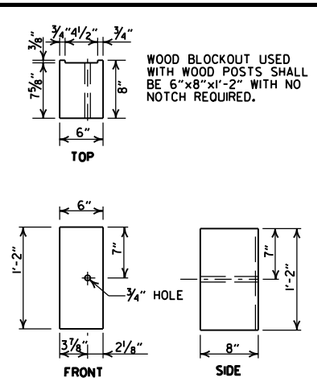

WOOD BLOCKOUT USED WITH WOOD POSTS SHALL BE 6"x8"x1'-2" WITH NO NOTCH REQUIRED.

WOOD BLOCKOUT (W-BEAM)

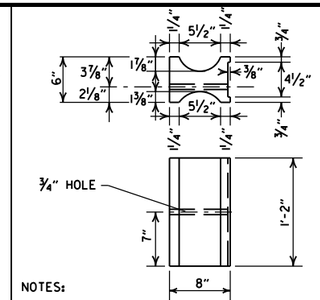

NOTES:

1. SIMILAR SHAPED PLASTIC BLOCKOUTS MAY BE USED AS LONG AS THEY MEET REQUIREMENTS FOR MANUAL FOR ASSESSING SAFETY HARDWARE (MASH).
2. DIMENSIONS ARE SUBJECT TO MANUFACTURERS TOLERANCES.

PLASTIC BLOCKOUT (W-BEAM)

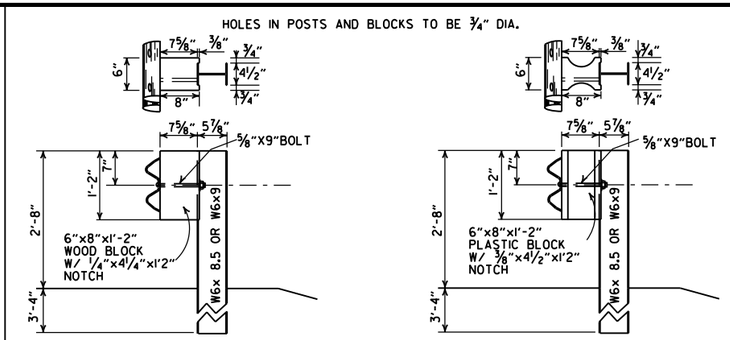

WOOD BLOCKOUT CONNECTIONS

PLASTIC BLOCKOUT CONNECTIONS

DETAILS OF STEEL LINE POST CONNECTIONS (W-BEAM)

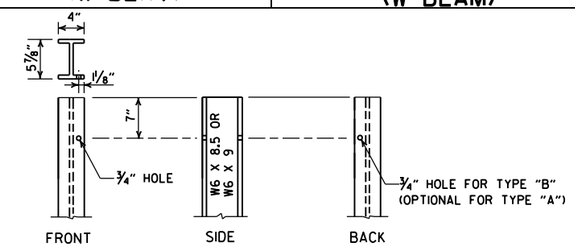

STEEL POST

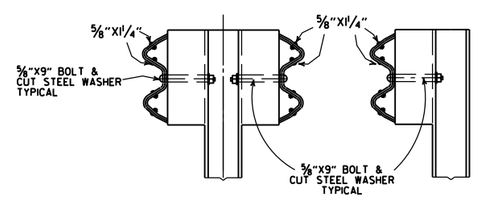

DETAILS OF STEEL LINE POST CONNECTIONS (W-BEAM)

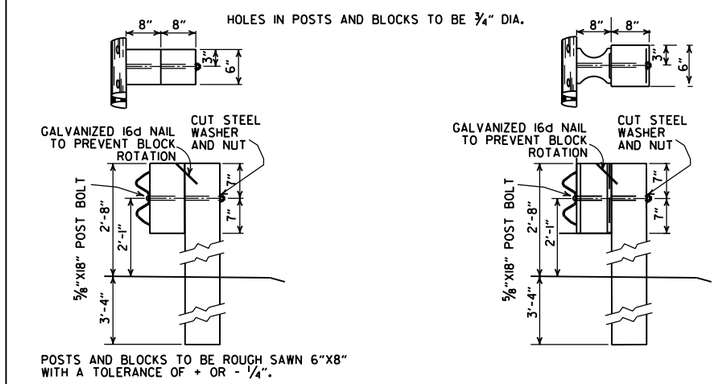

WOOD BLOCKOUT CONNECTIONS

PLASTIC BLOCKOUT CONNECTIONS

DETAILS OF WOOD LINE POST CONNECTIONS (W-BEAM)

-GENERAL NOTES-

ALL BOLTS SHALL BE SUFFICIENT LENGTH TO EXTEND THROUGH THE FULL THICKNESS OF THE NUT AND NO MORE THAN ¾" BEYOND IT.

WHERE W-BEAM GUARDRAIL CONTINUES, THE INTERMEDIATE SECTIONS SHALL HAVE A POST SPACING OF 6'-3" UNLESS OTHERWISE NOTED.

W-BEAM GUARDRAIL REPRESENTING INTERMEDIATE SECTIONS WILL BE MEASURED ALONG THE ROADWAY FACE FROM CENTERLINE OF POST TO CENTERLINE OF POST.

USE W-BEAM GUARDRAIL COMPONENTS OF SAME MATERIAL FOR ENTIRE JOB. FOR EXTENSIONS OR MODIFICATION OF EXISTING GUARDRAIL, W-BEAM GUARDRAIL COMPONENTS OF THE SAME TYPE AS THOSE EXISTING SHALL BE USED.

ANY BACKFILLING UNDER OR AROUND POST SHALL BE DAMP SAND THOROUGHLY TAMPED IN PLACE.

WOOD POSTS & WOOD BLOCKS SHALL BE EITHER DENSE NO. 1 STRUCTURAL OR BETTER 9.7f (1400 f) OR NO. 1 1350 f SOUTHERN PINE.

CONTRACTOR SHALL HAVE THE OPTION OF USING WOOD BLOCKOUTS FOR W-BEAM GUARDRAIL OR PLASTIC BLOCKOUTS, AS LONG AS BLOCKOUT USED MEETS REQUIREMENTS FOR MANUAL FOR ASSESSING SAFETY HARDWARE (MASH) FOR W-BEAM GUARDRAIL.

DELINEATORS SHALL BE MOUNTED AT 37.5' SPACING ON THE FRONT FACE OF THE GUARDRAIL. SPACING MAY BE REDUCED IN CURVES, AS DIRECTED BY THE ENGINEER. COLOR SHALL BE IN ACCORDANCE WITH THE MANUAL ON UNIFORM TRAFFIC CONTROL DEVICES. PAYMENT FOR DELINEATORS SHALL BE CONSIDERED INCLUDED IN THE PRICE BID PER LIN. FT. FOR GUARDRAIL.

DATE	REVISION	FILMED
05-19-22	REVISED GENERAL NOTES. ADDED DELINEATOR LOCATION.	
11-07-19	RENUMBERED AND RENAMED	
11-16-17	REVISED GENERAL NOTES AND RAISED GUARDRAIL HEIGHT 3"	
07-14-10	RAISED HEIGHT OF GUARDRAIL 1"	
10-15-09	ADDED REFERENCE TO MASH	
04-10-03	REVISED GENERAL NOTES	
08-22-02	REVISED DIMENSION ON WOOD & PLASTIC BLOCKOUT CONNECTIONS & STEEL POST	
11-16-01	REVISED WOOD BLOCKOUT & DETAILS OF WOOD LINE POST CONNECTIONS	
03-30-00	REMOVED GUARDRAIL AT BRIDGE ENDS	
01-12-00	ADDED PLASTIC BLOCKOUT	
08-12-98	REV. BLOCKOUTS TO WOOD. DELETED CONC. POST & REV. GENERAL NOTE. DELETED DET. OF GUARDRAIL REPLACE. BEHIND CURB & DET. OF POST PLACE. IN SOLID ROCK. & ADDED DETAILS OF STEEL LINE POST CONN. REMOVED BACK-UP PLATE. REVISED HOLES IN STEEL POLES	
04-03-97	REMOVED "LAP IN DIRECTION OF TRAFFIC" NOTE & PLACED ARROWS ON WASHERS	
10-18-96	REVISED WOOD POST NOTE	
06-02-94	ADDED ALT. STEEL POST SIZE	
08-05-93	REVISED STEEL POST SIZE	8-5-93
10-01-92	REDRAWN & REVISED	10-1-92
08-15-91	REVISED WASHER NOTE	8-15-91
08-02-90	REV. GEN. NOTE & DEPTH OF ANC. POST IN ROCK	8-2-90
07-15-88	REVISED SECTION 3 & GENERAL NOTES	
03-04-88	REV. ANCHOR POST, ELEV. NOTES & POST IN ROCK	780-3-4-88
10-30-87	REVISED WOOD LINE POST DETAIL	546-10-30-87
10-09-87	REDRAWN & REVISED	802-10-9-87

ARKANSAS STATE HIGHWAY COMMISSION

GUARDRAIL DETAILS

STANDARD DRAWING GR-6

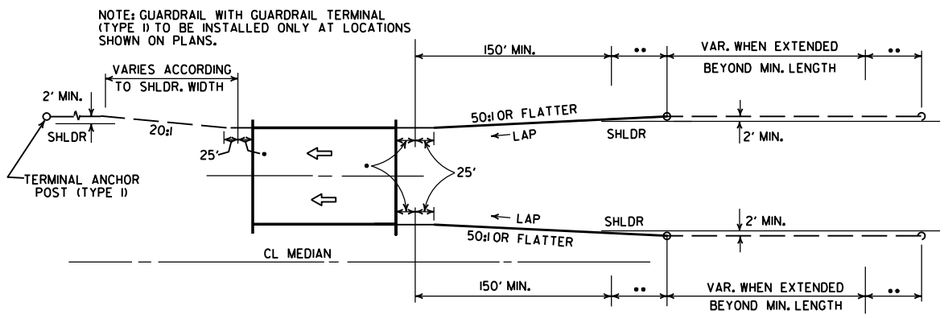

ONE-WAY TRAFFIC

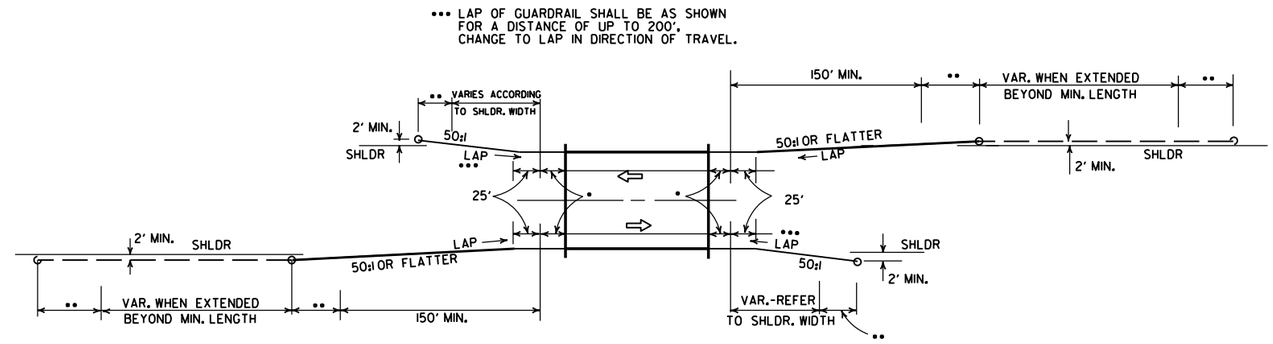

TWO-WAY TRAFFIC

METHODS OF INSTALLATION OF GUARDRAIL AT LESS THAN FULL SHOULDER WIDTH BRIDGES USING GUARDRAIL TERMINAL (TYPE 2)

••• LAP OF GUARDRAIL SHALL BE AS SHOWN FOR A DISTANCE OF UP TO 200'. CHANGE TO LAP IN DIRECTION OF TRAVEL.

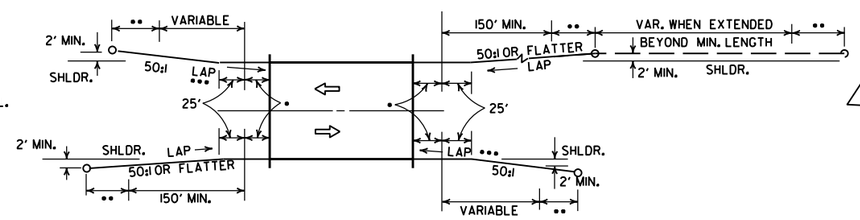

TWO-WAY TRAFFIC

NOTE: GUARDRAIL WITH GUARDRAIL TERMINAL (TYPE I) TO BE INSTALLED ONLY AT LOCATIONS SHOWN ON PLANS.

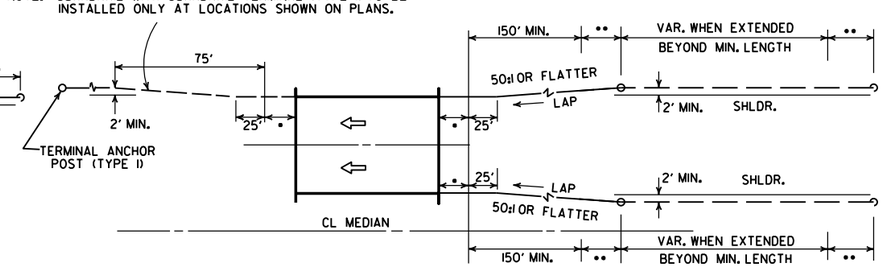

ONE-WAY TRAFFIC

METHOD OF INSTALLATION OF GUARDRAIL AT FULL SHOULDER WIDTH BRIDGES USING GUARDRAIL TERMINAL (TYPE 2)

••• LAP OF GUARDRAIL SHALL BE AS SHOWN FOR A DISTANCE OF UP TO 200'. CHANGE TO LAP IN DIRECTION OF TRAVEL.

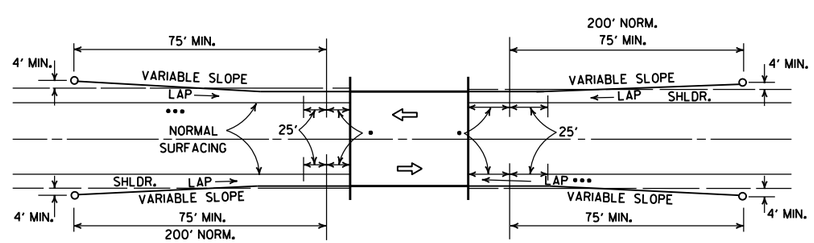

METHOD OF INSTALLATION OF GUARDRAIL USING GUARDRAIL TERMINAL (TYPE I) (FULL SHOULDER WIDTH OR LESS BRIDGES)

LEGEND

- • THRIE BEAM GUARDRAIL TERMINAL
- •• GUARDRAIL TERMINAL (TYPE 2)

DATE	REVISION	DATE FILM
11-07-19	RENUMBERED AND RENAMED	
4-17-08	REVISED LAYOUTS	
11-10-05	REMOVED GUARDRAIL NOTES AND DETAILS	
11-16-01	DELETED NOTE-METHOD OF INSTALLATION OF GUARDRAIL USING GUARDRAIL TERM. (TY. I)	
1-12-00	ADDED CONSTRUCTION NOTE	1-12-00
6-26-97	REVISED LAYOUT	
10-1-92	REDRAWN & REVISED	10-1-92
	ADDED NOTE	
10-9-87	REDRAWN & REVISED	

ARKANSAS STATE HIGHWAY COMMISSION

GUARDRAIL DETAILS

STANDARD DRAWING GR-8

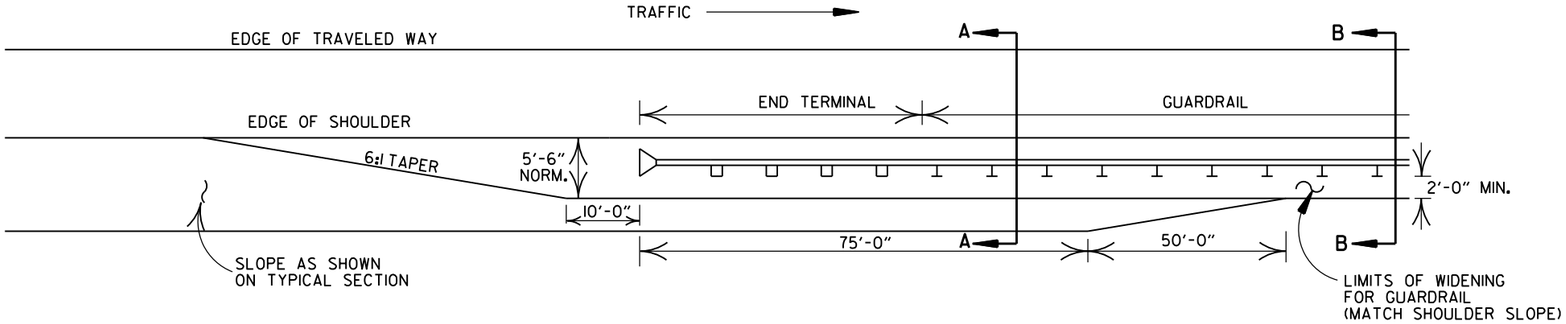

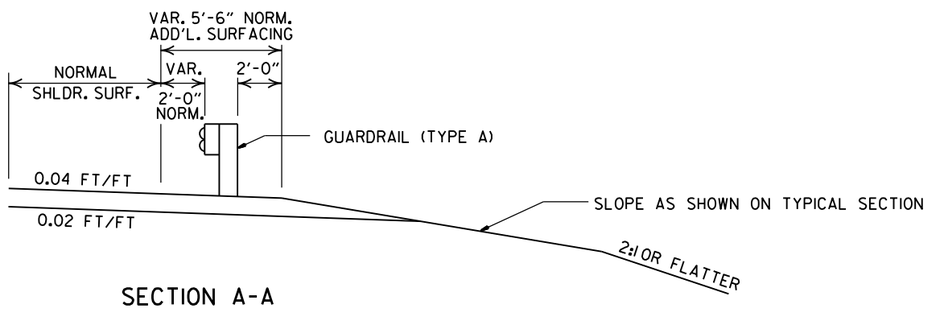

SECTION A-A

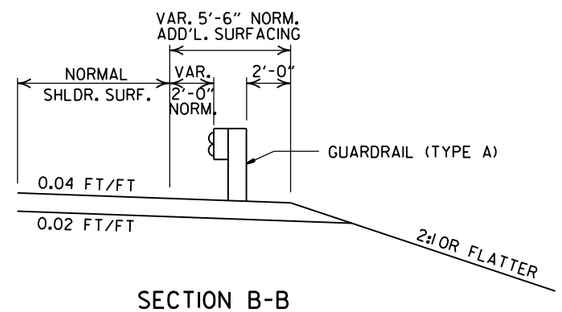

SECTION B-B

DETAILS OF WIDENING FOR GUARDRAIL

NOTE: NORMAL SECTION TO BE WIDENED APPROX. 5'-6" EACH SIDE TO SUPPORT GUARDRAIL.

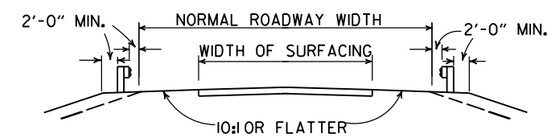

SECTION ON TANGENT

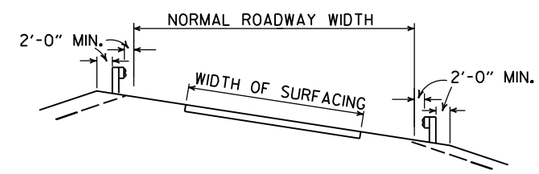

SECTION ON CURVE

DETAILS SHOWING POSITION OF GUARDRAIL ON HIGHWAY

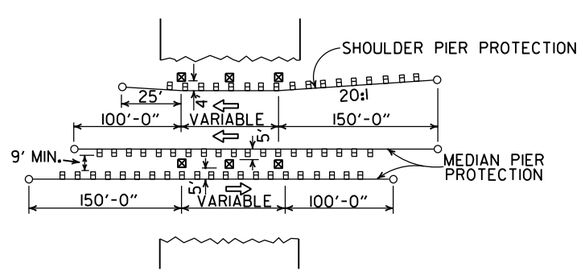

METHOD OF INSTALLATION OF GUARDRAIL AT FIXED OBSTACLE

DATE	REVISION	DATE FILM
11-07-19	RENUMBERED AND RENAMED	
4-17-08	MINOR REVISION	
11-10-05	DRAWN	

ARKANSAS STATE HIGHWAY COMMISSION

GUARDRAIL DETAILS

STANDARD DRAWING GR-9

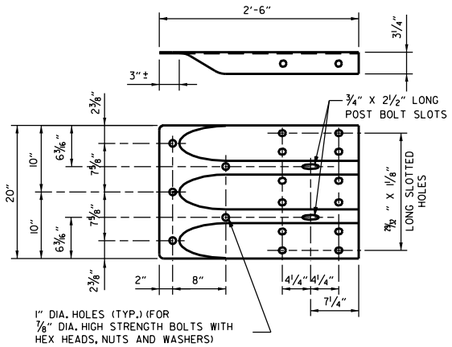

SPECIAL END SHOE

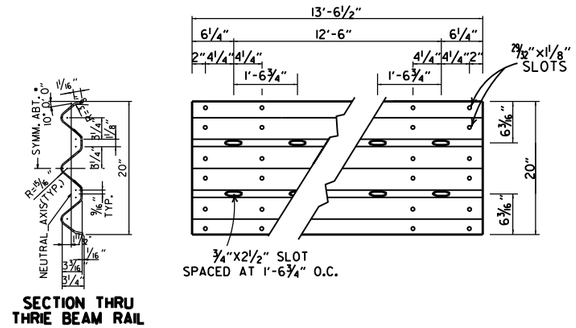

THRIE BEAM RAIL

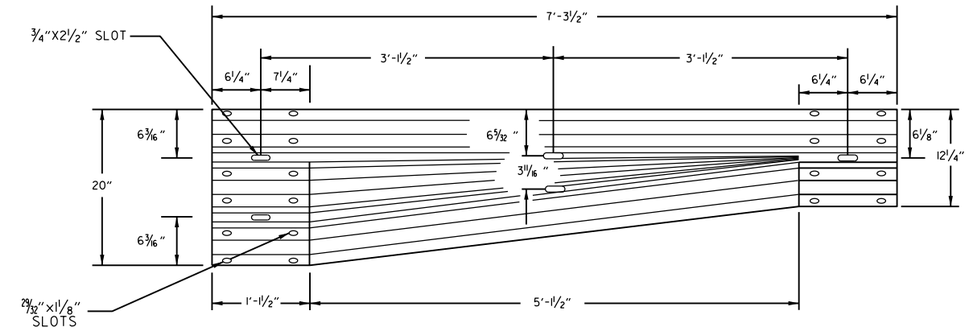

TRANSITION SECTION

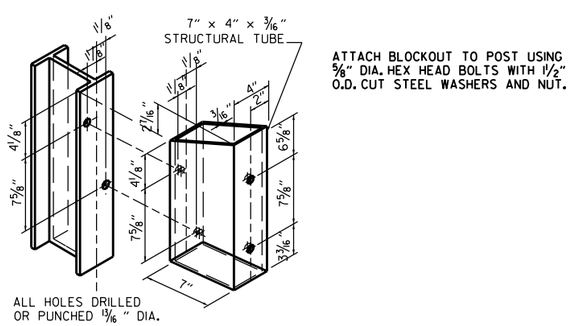

STRUCTURAL STEEL TUBING BLOCKOUT DETAIL

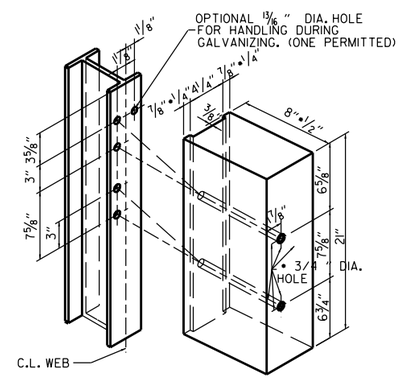

ALL HOLES 13/16" DIAMETER EXCEPT AS NOTED

HOLE PUNCHING DETAIL FOR STEEL POST & WOOD OR PLASTIC BLOCKOUTS

NOTE: BLOCKS SHALL BE THE SAME TYPE THROUGHOUT THE PROJECT LIMITS.

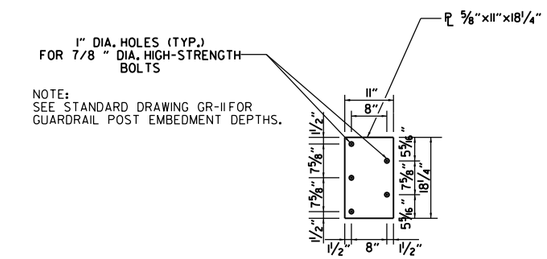

NOTE:
SEE STANDARD DRAWING GR-11 FOR GUARDRAIL POST EMBEDMENT DEPTHS.

CONNECTOR PLATE

CONNECTOR PLATE SHALL BE AASHTO M270, GR. 36 AND SHALL BE GALVANIZED AFTER FABRICATION. GALVANIZING SHALL CONFORM TO SUBSECTION 807.19 OF THE STANDARD SPECIFICATIONS. CONNECTOR PLATE TO BE BOLTED TO SPECIAL END SHOE USING 7/8" DIA. HIGH STRENGTH BOLTS, WITH THE HEADS PLACED ON THE TRAFFIC FACE. WASHERS SHALL BE USED UNDER THE HEAD AND NUT. BOLTS, NUTS AND WASHERS SHALL BE GALVANIZED AND SHALL CONFORM TO SUBSECTION 807.06.

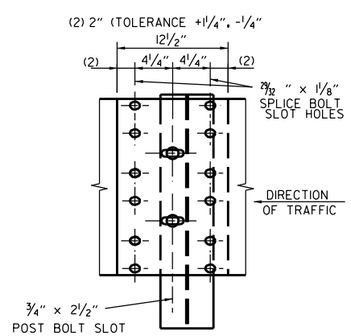

THRIE BEAM RAIL SPLICE AT POST

GENERAL NOTES:

THE THRIE BEAM RAIL, SPECIAL END SHOE, AND THE TRANSITION SECTION SHALL BE MADE OF STEEL AND SHALL BE 12 GAGE. ZINC COATING SHALL BE TYPE I.

RAIL POSTS SHALL BE SET PERPENDICULAR TO THE ROADWAY PROFILE GRADE AND VERTICALLY IN CROSS SECTION.

ALL BOLTS SHALL BE SUFFICIENT LENGTH TO EXTEND THROUGH THE FULL THICKNESS OF THE NUT AND NO MORE THAN 3*4" BEYOND IT.

ALL LAP SPLICES, INCLUDING SPECIAL END SHOES, SHALL BE MADE IN THE DIRECTION SHOWN ON STANDARD DRAWINGS GR-8 & GR-13.

REFER TO STD. DRWG. GR-11 FOR POST DETAILS.

USE THRIE BEAM GUARDRAIL COMPONENTS OF SAME MATERIAL FOR ENTIRE JOB.

THRIE BEAM POSTS SHALL BE SAME MATERIAL AS W-BEAM POSTS FOR ENTIRE JOB.

WOOD POSTS & WOOD BLOCKS SHALL BE EITHER DENSE NO. 1 STRUCTURAL OR BETTER 9.7f (1400 f) OR NO. 1 1350 f SOUTHERN PINE.

DATE	REVISION	FILMED
11-07-19	RENAMED AND REVISED REFERENCES	
11-16-17	REVISED TRANSITION SECTION, GUARD RAIL HEIGHT, AND GENERAL NOTES; MOVED THRIE BEAM GUARD RAIL CONNECTIONS AT BRIDGES ENDS TO STD. DRWG. GR-12	
07-14-10	RAISED HEIGHT OF W-BEAM 1"	
11-29-07	ADDED PLASTIC BLOCKOUTS	
11-10-05	ADDED NOTE FOR ATTACHING STEEL BLOCKOUT	
11-18-04	REVISED GENERAL NOTES	
10-9-03	REVISED GENERAL NOTES	
04-10-03	REVISED GENERAL NOTES	
08-22-02	REVISED NOTE (2)	
06-29-00	MOVED DIMENSION LINES	
05-18-00	ADDED NOTE	
03-30-00	DRAWN & ISSUED	

ARKANSAS STATE HIGHWAY COMMISSION

GUARDRAIL DETAILS

STANDARD DRAWING GR-10

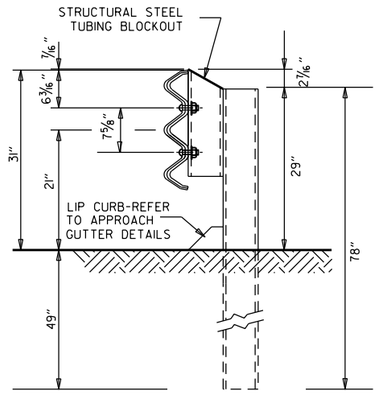

THRIE BEAM RAIL WITH STEEL TUBING BLOCKOUT
AND STEEL POST
POSTS 1-7

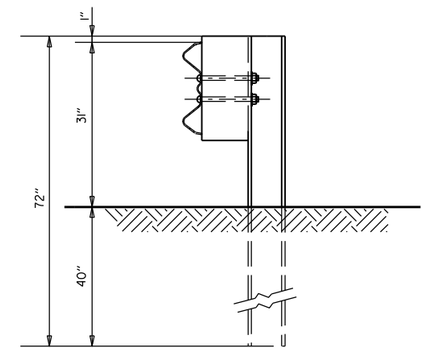

W-BEAM TO THRIE BEAM TRANSITION RAIL
WITH WOOD OR PLASTIC BLOCKOUT AND STEEL POST
POST 8

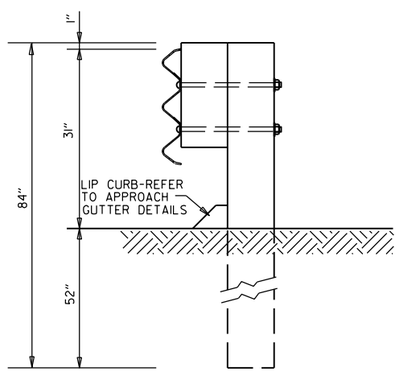

THRIE BEAM RAIL
WITH WOOD OR PLASTIC
BLOCKOUTS & WOOD POSTS
POSTS 1-6

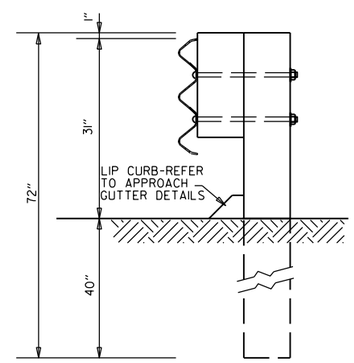

THRIE BEAM RAIL
WITH WOOD OR PLASTIC
BLOCKOUT & WOOD POST
POST 7

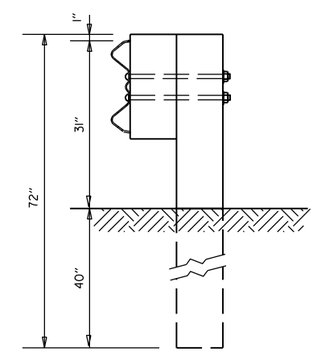

W-BEAM TO THRIE BEAM
TRANSITION RAIL WITH WOOD OR
PLASTIC BLOCKOUT & WOOD POST
POST 8

GENERAL NOTES:

RAIL POSTS SHALL BE SET PERPENDICULAR TO THE ROADWAY PROFILE GRADE AND VERTICALLY IN CROSS SECTION.

WOOD POSTS & WOOD BLOCKS SHALL BE EITHER DENSE NO. 1 STRUCTURAL OR BETTER 9.7f (1400 f) OR NO. 1 1350 f SOUTHERN PINE.

DATE	REVISION	FILMED
11-07-19	RENAMED	
11-16-17	REVISED GUARDRAIL HEIGHT, CHANGED STD. DWG. NUMBER FROM GR-10A TO GR-11	
07-14-10	REVISED POST 8 DIMENSIONS	
11-29-07	ADDED PLASTIC BLOCKOUTS	
08-22-02	REVISED LIP CURB NOTE	
03-30-00	DRAWN & ISSUED	

ARKANSAS STATE HIGHWAY COMMISSION

GUARDRAIL DETAILS

STANDARD DRAWING GR-11

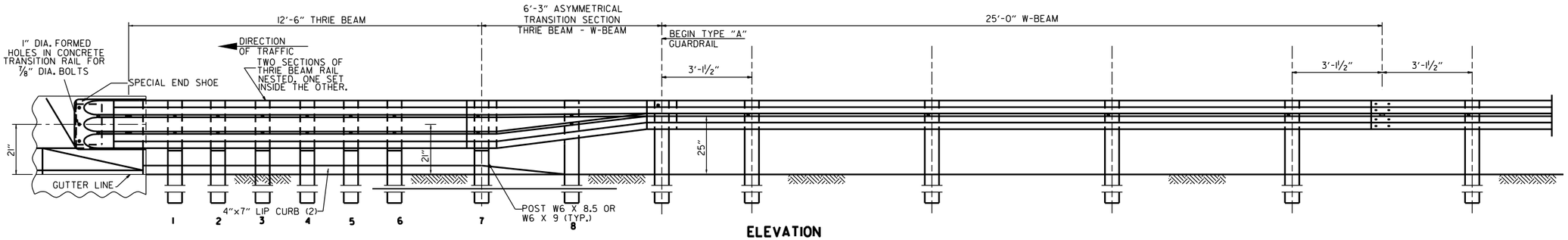

ELEVATION

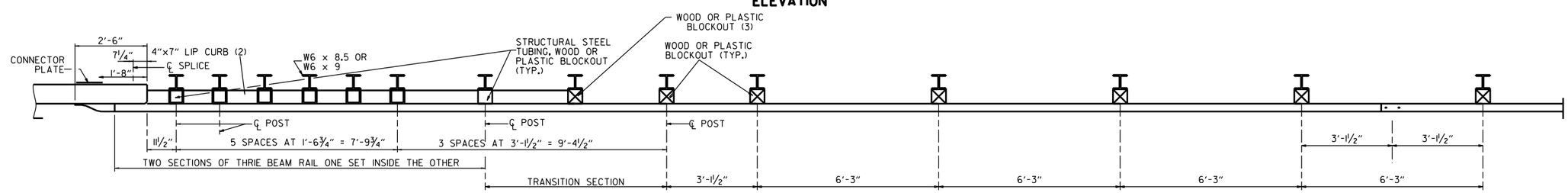

PLAN

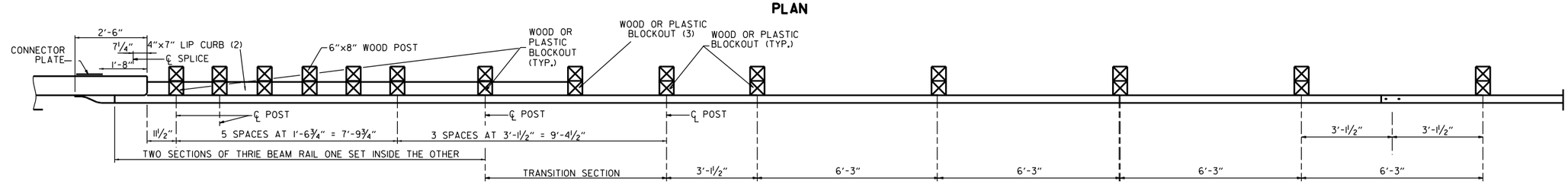

PLAN

(1) VERIFY BOLT SPACING FROM RAIL TRANSITION PRODUCER.
(2) REFER TO APPROACH GUTTER DETAILS.
(3) LENGTH OF BLOCKOUT ON POST 8 TO BE MODIFIED TO FIT RAIL WIDTH.

THRIE BEAM GUARDRAIL CONNECTION AT BRIDGE ENDS

GENERAL NOTES:

THE THRIE BEAM RAIL, SPECIAL END SHOE, AND THE TRANSITION SECTION SHALL BE MADE OF STEEL AND SHALL BE 12 GAGE. ZINC COATING SHALL BE TYPE I.

RAIL POSTS SHALL BE SET PERPENDICULAR TO THE ROADWAY PROFILE GRADE AND VERTICALLY IN CROSS SECTION.

ALL BOLTS SHALL BE SUFFICIENT LENGTH TO EXTEND THROUGH THE FULL THICKNESS OF THE NUT AND NO MORE THAN 3/4" BEYOND IT.

ALL LAP SPLICES, INCLUDING SPECIAL END SHOES, SHALL BE MADE IN THE DIRECTION SHOWN ON STANDARD DRAWINGS GR-8 & GR-13.

REFER TO STD. DRWG. GR-11 FOR POST DETAILS.

USE THRIE BEAM GUARDRAIL COMPONENTS OF SAME MATERIAL FOR ENTIRE JOB.

THRIE BEAM POSTS SHALL BE SAME MATERIAL AS W-BEAM POSTS FOR ENTIRE JOB.

POSTS SHALL NOT BE PLACED AT SPLICE LOCATIONS ALONG W-BEAM RAILS.

WOOD POSTS & WOOD BLOCKS SHALL BE EITHER DENSE NO. 1 STRUCTURAL OR BETTER 9.7f (1400 f) OR NO. 1 1350 f SOUTHERN PINE.

DATE	REVISION	FILMED
05-14-20	REVISED NOTES	
11-07-19	RENAMED & REVISED REFERENCES	
11-16-17	RE-DRAWN FROM STD. DWG. GR-10 & ISSUED	

ARKANSAS STATE HIGHWAY COMMISSION

GUARDRAIL DETAILS

STANDARD DRAWING GR-12

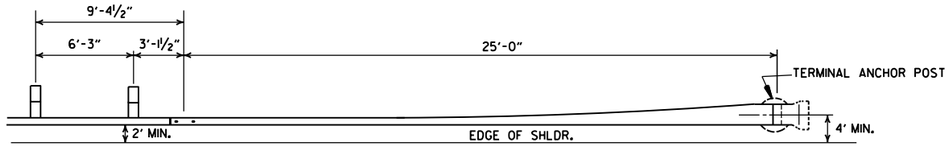

PLAN - GUARDRAIL TERMINAL (TYPE I)

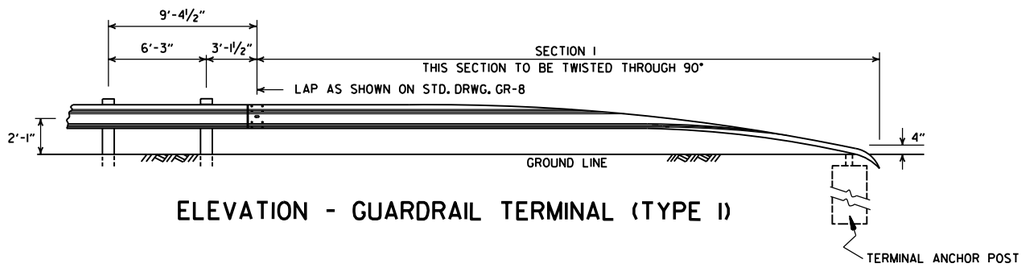

ELEVATION - GUARDRAIL TERMINAL (TYPE I)

NOTE:
SECTIONS 1 AND 2 OF GUARDRAIL TERMINAL
SHALL BE PAID FOR AT THE PRICE BID PER
LINEAR FOOT OF THE TYPE OF GUARDRAIL SPECIFIED.

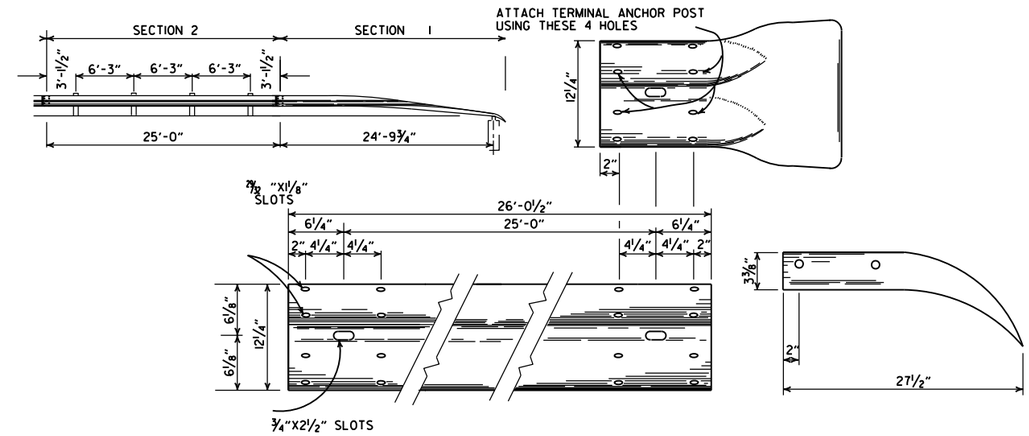

SECTION 1

TERMINAL SECTION

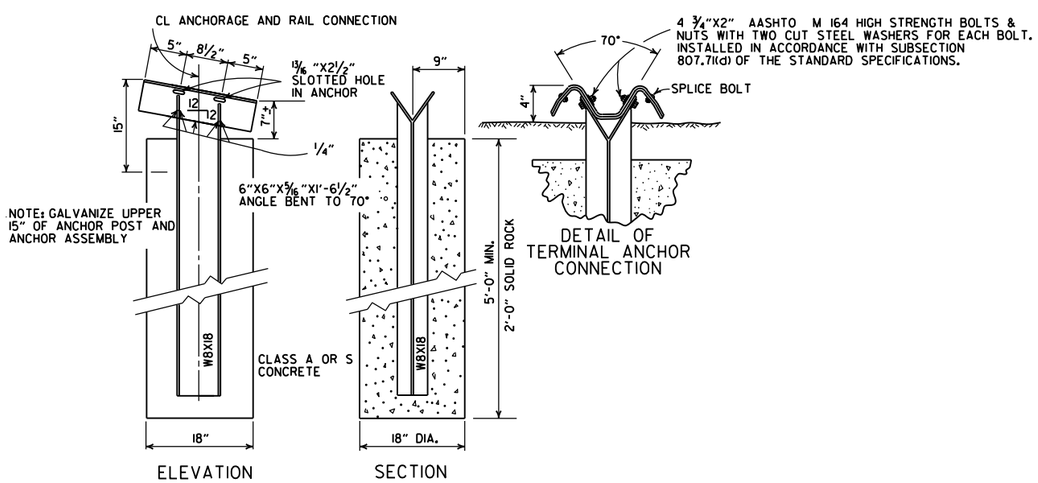

NOTE: RAIL MEMBERS MAY BE BOLTED TO ANGLE AT TERMINAL ANCHOR AND THE TWO ASSEMBLIES POSITIONED TO PROPER ALIGNMENT PRIOR TO PLACING CONCRETE AROUND 8 WF 17 POST IF CONTRACTOR SO DESIRES.

DETAIL OF TERMINAL ANCHOR POST (TYPE I)

DATE	REVISION	FILMED
11-07-19	RENAMED & REVISED REFERENCE.	
11-16-17	REVISED GUARDRAIL HEIGHT AND LOCATION OF POSTS	
07-14-10	RAISED HEIGHT OF GUARDRAIL 1"	
06-26-97	REVISED LAP NOTE	
10-18-96	REVISED ASTM REF. TO AASHTO	
11-03-94	DIMENSION TERMINAL DETAIL	
11-11-92	ADDED NOTE FOR PAYMENT	11-11-92
10-01-92	DRAWN & ISSUED	10-1-92

ARKANSAS STATE HIGHWAY COMMISSION

GUARDRAIL DETAILS

STANDARD DRAWING GRT-1

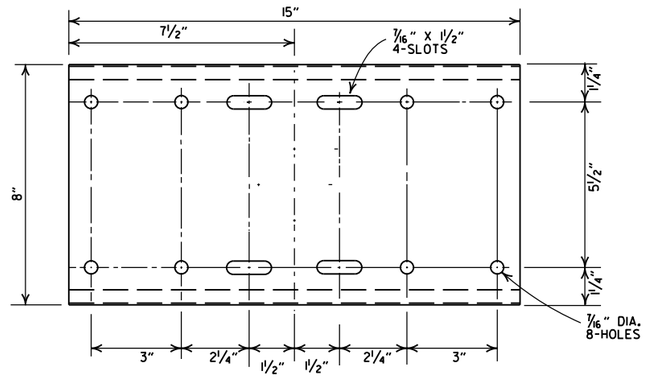

SHELF

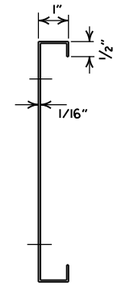

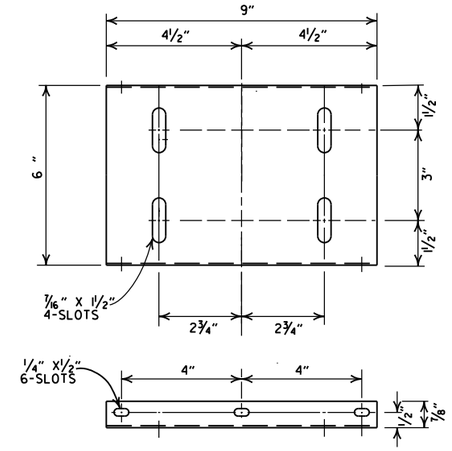

PLATFORM

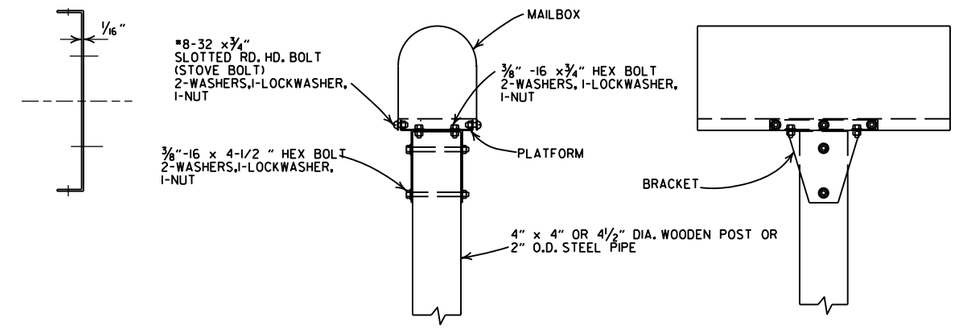

SINGLE INSTALLATION

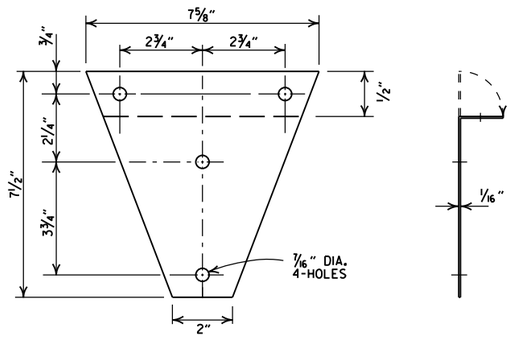

BRACKET

GENERAL NOTES

1. MAILBOX POSTS MAY BE WOOD OR METAL. WOOD POSTS SHALL BE PRESSURE TREATED FOR GROUND CONTACT IN ACCORDANCE WITH SECTION 637.02 OF THE STANDARD SPECIFICATIONS.
2. ANTI-TWIST PLATES SHALL BE USED ONLY ON METAL POSTS.
3. MAILBOX SHELF, BRACKET & PLATFORM SHALL BE GALVANIZED OR PAINTED STEEL, HOWEVER TREATED WOOD MAY BE USED WITH WOODEN POSTS. THE WOODEN SHELF, BRACKET & PLATFORM SHALL BE A MINIMUM OF ¾" THICK AND SHALL BE ASSEMBLED WITH BOLTS OF THE APPROPRIATE LENGTH WITH SIX 8 X ¾" FLATHEAD WOOD SCREWS USED TO ATTACH THE MAILBOX TO THE PLATFORM.
4. THE MAILBOX SHELF AND PLATFORM THAT IS SHOWN IS FOR STANDARD SIZE MAILBOXES. THE SHELF AND PLATFORM SIZE SHALL BE MODIFIED TO FIT MAILBOXES OF A DIFFERENT SIZE.
5. METAL PIPE FOR MAILBOX SUPPORT SHALL BE 2" OUTSIDE DIAMETER STEEL WITH A WALL THICKNESS OF 0.145" AND A WEIGHT OF 2.72 LBS PER FT. OUTSIDE DIAMETER AND WEIGHT SHALL HAVE A TOLERANCE OF +/- 5% ACCORDING TO AASHTO M 181.
6. MAILBOX SUPPORT SYSTEM DIFFERING FROM THOSE SHOWN MAY BE USED, PROVIDED THEY ARE ON THE ARDOT QUALIFIED PRODUCTS LIST FOR MAILBOX SUPPORTS.

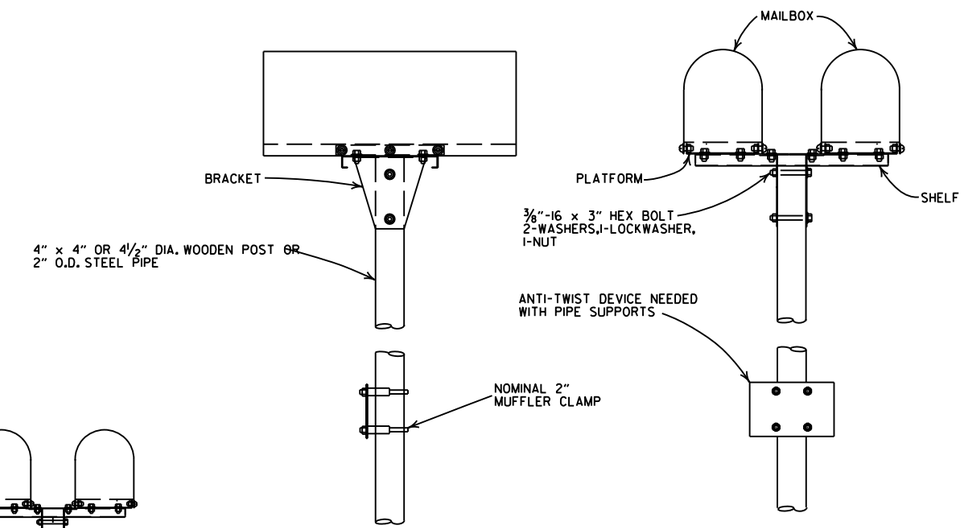

DOUBLE INSTALLATION

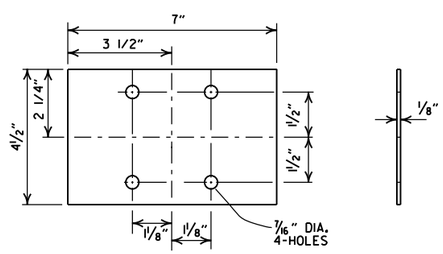

ANTI-TWIST PLATE

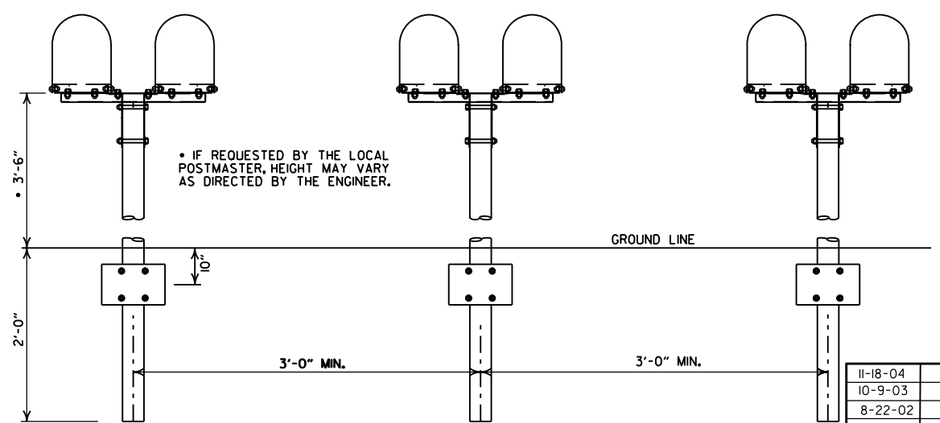

SPACING FOR MULTIPLE POST INSTALLATION

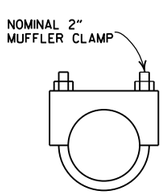

CLAMP

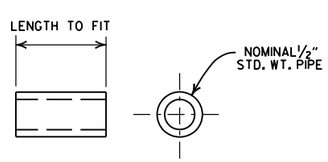

SPACER

DATE	FILMED	REVISION
11-18-04		REVISED NOTES
10-9-03		REVISED NOTE 6
8-22-02		REVISED NOTE 6
10-18-96		CORRECTED AASHTO
10-1-92		CORRECTED SPELLING
9-26-91		NEW PHONE NUMBER
8-15-91		ADDED NOTE
11-30-89		ADJUSTED HEIGHT & ADDED NOTE
2-16-89		DELETED SLOTS FROM SHELF & PLTF
11-17-88	10-1-92	ADJUSTED DIMENSIONS OF STEEL POSTS
7-15-88	20-7-15-88	ISSUED

ARKANSAS STATE HIGHWAY COMMISSION

MAILBOX DETAILS

STANDARD DRAWING MB-1

REINFORCED CONCRETE ARCH PIPE DIMENSIONS

EQUIV. DIA.	SPAN		RISE	
	AASHTO M 206	ARDOT NOMINAL	AASHTO M 206	ARDOT NOMINAL
INCHES	INCHES			
15	18	18	11	11
18	22	22	13½	14
21	26	26	15½	16
24	28½	29	18	18
30	36¼	36	22½	23
36	43⅜	44	26⅝	27
42	51⅛	51	31⅝	31
48	58½	59	36	36
54	65	65	40	40
60	73	73	45	45
72	88	88	54	54
84	102	102	62	62
90	115	115	72	72
96	122	122	77½	77
108	138	138	87⅛	87
120	154	154	96⅞	97
132	168¾	169	106½	107

THE MEASURED SPAN AND RISE SHALL NOT VARY MORE THAN ± 2 PERCENT FROM THE VALUES SPECIFIED BY AASHTO M206.

REINFORCED CONCRETE HORIZONTAL ELLIPTICAL PIPE DIMENSIONS

EQUIV. DIA.	AASHTO M 207	
	SPAN	RISE
INCHES	INCHES	
18	23	14
24	30	19
27	34	22
30	38	24
33	42	27
36	45	29
39	49	32
42	53	34
48	60	38
54	68	43
60	76	48
66	83	53
72	91	58
78	98	63
84	106	68

THE MEASURED SPAN AND RISE SHALL NOT VARY MORE THAN ± 2 PERCENT FROM THE VALUES SPECIFIED BY AASHTO M207.

CONSTRUCTION SEQUENCE

1. PLACE STRUCTURAL BEDDING MATERIAL TO GRADE. DO NOT COMPACT.
2. INSTALL PIPE TO GRADE.
3. COMPACT STRUCTURAL BEDDING OUTSIDE THE MIDDLE THIRD OF THE PIPE.
4. PLACE AND COMPACT THE HAUNCH AREA UP TO THE MIDDLE OF THE PIPE.
5. COMPLETE BACKFILL ACCORDING TO SUBSECTION 606.03.(f)(1).

NOTE: HAUNCH AND STRUCTURAL BEDDING MATERIAL WILL NOT BE PAID FOR SEPARATELY, BUT COMPENSATION WILL BE CONSIDERED TO BE INCLUDED IN THE PRICE BID PER LINEAR FOOT OF CONCRETE PIPE.

- LEGEND -

D_1 = NORMAL INSIDE DIAMETER OF PIPE
D_O = OUTSIDE DIAMETER OF PIPE
H = FILL COVER HEIGHT OVER PIPE (FEET)
MIN. = MINIMUM
= UNDISTURBED SOIL

INSTALLATION TYPE	MATERIAL REQUIREMENTS FOR HAUNCH AND STRUCTURAL BEDDING
TYPE 1	AGGREGATE BASE COURSE (CLASS 5 OR CLASS 7)
TYPE 2	SELECTED MATERIALS (CLASS SM-1, SM-2, OR SM-4) OR TYPE 1 INSTALLATION MATERIAL*
TYPE 3**	AASHTO CLASSIFICATION A-1 THRU A-6 SOIL OR TYPE 1 OR 2 INSTALLATION MATERIAL

* SM-3 WILL NOT BE ALLOWED.

** MATERIALS SHALL NOT INCLUDE ORGANIC MATERIALS OR STONES LARGER THAN 3 INCHES.

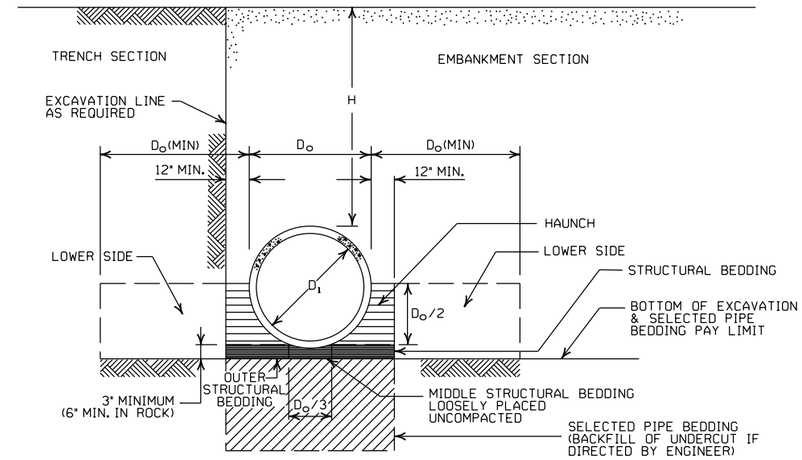

EMBANKMENT AND TRENCH INSTALLATIONS

1. MATERIAL IN THE HAUNCH AND OUTER STRUCTURAL BEDDING SHALL BE COMPACTED TO 95% OF THE MAXIMUM DENSITY ACCORDING TO THE TYPE OR CLASS OF MATERIAL USED.
2. FOR TRENCHES WITH WALLS OF NATURAL SOIL, THE DENSITY OF THE SOIL IN THE LOWER SIDE ZONE SHALL BE AS FIRM AS THE 95% DENSITY REQUIRED FOR THE HAUNCH. IF THE EXISTING SOIL DOES NOT MEET THIS CRITERIA, IT SHALL BE REMOVED AND RECOMPACTED TO 95% OF THE MAXIMUM DENSITY ACCORDING TO THE TYPE OF MATERIAL USED.
3. FOR EMBANKMENTS, THE MATERIAL IN THE LOWER SIDE ZONE SHALL BE COMPACTED TO 95% OF THE MAXIMUM DENSITY ACCORDING TO THE TYPE OR CLASS OF MATERIAL USED.

MINIMUM HEIGHT OF FILL "H" OVER CIRCULAR R.C. PIPE CULVERTS

	CLASS OF PIPE			
	CLASS III		CLASS IV	CLASS V
INSTALLATION TYPE	TYPE 1 OR 2	TYPE 3	ALL	ALL
PIPE ID (IN.)	FEET			
12-15	2	2.5	2	1
18-24	2.5	3	2	1
27-33	3	4	2	1
36-42	3.5	5	2	1
48	4.5	5.5	2	1
54-60	5	7	2	1
66-78	6	8	2	1
84-108	7.5	8	2	1

NOTE: FOR MINIMUM COVER VALUES, "H" SHALL INCLUDE A MINIMUM OF 12" OF PAVEMENT AND/OR BASE.

MAXIMUM HEIGHT OF FILL "H" OVER CIRCULAR R.C. PIPE CULVERTS

INSTALLATION TYPE	CLASS OF PIPE		
	CLASS III	CLASS IV	CLASS V
	FEET		
TYPE 1	21	32	50
TYPE 2	16	25	39
TYPE 3	12	20	30

NOTE: IF FILL HEIGHT EXCEEDS 50 FEET, A SPECIAL DESIGN CONCRETE PIPE WILL BE REQUIRED USING TYPE 1 INSTALLATION.

MINIMUM HEIGHT OF FILL "H" OVER R.C. ARCH & HORIZONTAL ELLIPTICAL PIPE CULVERTS

INSTALLATION TYPE	CLASS OF PIPE	
	CLASS III	CLASS IV
	FEET	
TYPE 2 OR TYPE 3	2.5	1.5

NOTE: TYPE 1 INSTALLATION WILL NOT BE ALLOWED FOR ARCH & HORIZONTAL ELLIPTICAL PIPE CULVERTS.

NOTE: FOR MINIMUM COVER VALUES, "H" SHALL INCLUDE A MINIMUM OF 12" OF PAVEMENT AND/OR BASE.

MAXIMUM HEIGHT OF FILL "H" OVER R.C. ARCH & HORIZONTAL ELLIPTICAL PIPE CULVERTS

INSTALLATION TYPE	CLASS OF PIPE	
	CLASS III	CLASS IV
	FEET	
TYPE 2	13	21
TYPE 3	10	16

NOTE: TYPE 1 INSTALLATION WILL NOT BE ALLOWED FOR ARCH & HORIZONTAL ELLIPTICAL PIPE CULVERTS.

GENERAL NOTES

1. CONCRETE PIPE CULVERT CONSTRUCTION SHALL CONFORM TO ARKANSAS DEPARTMENT OF TRANSPORTATION STANDARD SPECIFICATIONS FOR HIGHWAY CONSTRUCTION (CURRENT EDITION), WITH APPLICABLE SUPPLEMENTAL SPECIFICATIONS AND SPECIAL PROVISIONS. UNLESS OTHERWISE NOTED IN THE PLANS, SECTION AND SUBSECTION REFER TO THE STANDARD CONSTRUCTION SPECIFICATIONS.
2. CONCRETE PIPE CULVERT DESIGN SHALL CONFORM TO AASHTO LRFD BRIDGE DESIGN SPECIFICATIONS, FIFTH EDITION (2010) WITH 2010 INTERIMS.
3. ALL PIPE SHALL CONFORM TO SECTION 606. CIRCULAR R.C. PIPE CULVERTS SHALL CONFORM TO AASHTO M170. R.C. ARCH PIPE CULVERTS SHALL CONFORM TO AASHTO M206 AND HORIZONTAL ELLIPTICAL PIPE CULVERTS SHALL CONFORM TO AASHTO M207.
4. ALL PIPE SHALL BE PROTECTED DURING CONSTRUCTION BY A COVER SUFFICIENT TO PREVENT DAMAGE FROM PASSAGE OF EQUIPMENT.
5. THE MINIMUM TRENCH WIDTH SHALL BE THE OUTSIDE DIAMETER OF THE PIPE PLUS 24 INCHES. THE MAXIMUM ALLOWABLE TRENCH WIDTH SHALL BE THE MINIMUM WIDTH PRACTICABLE FOR WORKING CONDITIONS.
6. MULTIPLE PIPE CULVERTS SHALL BE INSTALLED WITH A MINIMUM CLEARANCE OF 24 INCHES BETWEEN STRINGS OF PIPE. REFER TO STD. DWG. FES-2 FOR MINIMUM CLEARANCE WHERE FLARED END SECTIONS ARE USED.
7. IMPERVIOUS MATERIAL SHOULD BE PLACED AS DIRECTED BY THE ENGINEER AT THE ENDS OF THE CULVERT TO PREVENT LOSS OF STRUCTURAL BEDDING WHEN PERVIOUS MATERIAL IS USED FOR STRUCTURAL BEDDING AND/OR BACKFILL.
8. NOT MORE THAN ONE LIFTING HOLE MAY BE PROVIDED IN CONCRETE PIPE TO FACILITATE HANDLING. HOLE MAY BE CAST IN PLACE, CUT INTO THE FRESH CONCRETE AFTER FORMS ARE REMOVED, OR DRILLED. THE HOLE SHALL NOT BE MORE THAN TWO INCHES IN DIAMETER OR TWO INCHES SQUARE. CUTTING OR DISPLACEMENT OF REINFORCEMENT WILL NOT BE PERMITTED. SPALLED AREAS AROUND THE HOLE SHALL BE REPAIRED IN A WORKMANLIKE MANNER. LIFTING HOLE SHALL BE FILLED WITH MORTAR, CONCRETE, OR OTHER METHOD AS APPROVED BY THE ENGINEER.
9. WHEN DIRECTED BY THE ENGINEER, UNSUITABLE MATERIAL THAT IS ENCOUNTERED AT THE BOTTOM OF THE EXCAVATED TRENCH (BELOW THE AREA IDENTIFIED AS "STRUCTURAL BEDDING" ABOVE) WILL BE EXCAVATED AND REPLACED WITH SELECTED PIPE BEDDING. THE QUANTITY OF MATERIAL REQUIRED TO BACKFILL THE UNDERCUT AREA UP TO THE SELECTED PIPE BEDDING PAY LIMIT DESIGNATED ABOVE WILL BE MEASURED AND PAID FOR AS "SELECTED PIPE BEDDING."
10. WHEN THE EXISTING MATERIAL EXCAVATED FOR THE PIPE TRENCH IS DETERMINED BY THE ENGINEER TO BE UNSUITABLE FOR BACKFILLING THE PIPE (ABOVE THE AREA IDENTIFIED ABOVE AS THE HAUNCH), BORROW MATERIAL OR MATERIAL FROM THE ROADWAY EXCAVATION WILL BE USED TO BACKFILL THE PIPE. IF SUITABLE MATERIAL IS NOT AVAILABLE, THE ENGINEER MAY AUTHORIZE THE USE OF "SELECTED PIPE BACKFILL."

DATE	REVISION	DATE FILMED
2-27-14	REVISED GENERAL NOTE 1.	
12-15-11	REVISED FOR LRFD DESIGN SPECIFICATIONS	
5-18-00	REVISED TYPE 3 BEDDING & ADDED NOTE	
3-30-00	REVISED INSTALLATIONS	
11-06-97	ISSUED	

ARKANSAS STATE HIGHWAY COMMISSION

CONCRETE PIPE CULVERT FILL HEIGHTS & BEDDING

STANDARD DRAWING PCC-1

CORRUGATED STEEL PIPE (ROUND)

PIPE DIAMETER (INCHES)	① MINUMUM COVER TOP OF PIPE TO TOP OF GROUND "H" (FEET)	MAX. FILL HEIGHT "H" ABOVE TOP OF PIPE (FEET)				
		METAL THICKNESS (INCHES)				
		0.064	0.079	0.109	0.138	0.168
2⅔ INCH BY ½ INCH CORRUGATION RIVETED, WELDED, OR HELICAL LOCK-SEAM						
12	1	84	91			
15	1	67	73			
18	1	56	61			
24	1	42	46	59		
30	2	34	36	47		
36	2		30	39	41	
42	2		43	67	70	73
48	2		37	58	61	64
② 3 INCH BY 1 INCH OR 5 INCH BY 1 INCH CORRUGATION RIVETED, WELDED, BOLTED, OR HELICAL LOCK-SEAM						
36	1	48	60	88	111	118
42	1	41	51	72	90	102
48	1	36	45	64	77	85
54	2	32	40	59	71	79
60	2	29	36	53	64	71
66	2	26	33	47	58	64
72	2	24	30	44	53	59
78	2		28	41	49	54
84	2		26	38	45	51
90	2		24	35	43	45
96	2		22	33	40	44
102	2			31	38	42
108	2			30	35	39
114	2			28	34	37
120	2			27	32	35

CORRUGATED ALUMINUM PIPE (ROUND)

PIPE DIAMETER (INCHES)	① MINUMUM COVER TOP OF PIPE TO TOP OF GROUND "H" (FEET)	MAX. FILL HEIGHT "H" ABOVE TOP OF PIPE (FEET)				
		METAL THICKNESS IN INCHES				
		0.060	0.075	0.105	0.135	0.164
		2 ⅔ INCH BY ½ INCH CORRUGATION RIVETED OR HELICAL LOCK-SEAM				
12	1	45	45			
18	2	30	30	52		
24	2	22	22	39	41	
30	2		18	31	32	34
36	2.5		15	26	27	28
42	2			43	43	44
48	2			40	41	43
54	2			35	37	38
60	2				33	34
66	2					31
72	2					29

CORRUGATED METAL PIPE ARCHES

EQUIV. DIA. (INCHES)	PIPE DIMENSION SPAN X RISE (INCHES)	MINUMUM CORNER RADIUS (INCHES)	STEEL				ALUMINUM		
			MIN. THICKNESS REQUIRED INCHES	① MIN. HEIGHT OF FILL, "H" (FT.)		MAX. HEIGHT OF FILL, "H" (FT.)	MIN. THICKNESS REQUIRED INCHES	① MIN. HEIGHT OF FILL, "H" (FT.)	MAX. HEIGHT OF FILL, "H" (FT.)
				INSTALLATION		INSTALLATION		INSTALLATION	INSTALLATION
				TYPE 1		TYPE 1		TYPE 1	TYPE 1
			2 ⅔ INCH BY ½ INCH CORRUGATION RIVETED, WELDED, OR HELICAL LOCK-SEAM				2 ⅔ INCH BY ½ INCH CORRUGATION RIVETED OR HELICAL LOCK-SEAM		
15	17x13	3	0.064	2		15	0.060	2	15
18	21x15	3	0.064	2		15	0.060	2	15
21	24x18	3	0.064	2.25		15	0.060	2.25	15
24	28x20	3	0.064	2.5		15	0.075	2.5	15
30	35x24	3	0.079	3		12	0.075	3	12
36	42x29	3½	0.079	3		12	0.105	3	12
42	49x33	4	0.079	3		12	0.105	3	12
48	57x38	5	0.109	3		13	0.135	3	13
54	64x43	6	0.109	3		14	0.135	3	14
60	71x47	7	0.138	3		15	0.164	3	15
66	77x52	8	0.168	3		15			
72	83x57	9	0.168	3		15			
			② 3 INCH BY 1 INCH OR 5 INCH BY 1 INCH CORRUGATION RIVETED, WELDED, OR HELICAL LOCK-SEAM						
				INSTALLATION		INSTALLATION			
				TYPE 2	TYPE 1	TYPE 2 TYPE 1			
36	40x31	5	0.079	3	2	12 15			
42	46x36	6	0.079	3	2	13 15			
48	53x41	7	0.079	3	2	13 15			
54	60x46	8	0.079	3	2	13 15			
60	66x51	9	0.079	3	2	13 15			
66	73x55	12	0.079	3	2	15 15			
72	81x59	14	0.079	3	2	15 15			
78	87x63	14	0.079	3	2	15 15			
84	95x67	16	0.109	3	2	15 15			
90	103x71	16	0.109	3	2	15 15			
96	112x75	18	0.109	3	2	15 15			
102	117x79	18	0.109	3	2	15 15			
108	128x83	18	0.138	3	2	15 15			

CONSTRUCTION SEQUENCE

1. PLACE STRUCTURAL BEDDING MATERIAL TO GRADE. DO NOT COMPACT.
2. INSTALL PIPE TO GRADE.
3. COMPACT STRUCTURAL BEDDING OUTSIDE THE MIDDLE THIRD OF THE PIPE.
4. COMPLETE STRUCTURAL BACKFILL OPERATION BY WORKING FROM SIDE TO SIDE OF THE PIPE. THE SIDE TO SIDE STRUCTURAL BACKFILL DIFFERENTIAL SHALL NOT EXCEED 24 INCHES OR 1/3 THE SIZE OF THE PIPE, WHICHEVER IS LESS.

NOTE: STRUCTURAL BACKFILL AND STRUCTURAL BEDDING MATERIAL WILL NOT BE PAID FOR SEPARATELY, BUT COMPENSATION WILL BE CONSIDERED TO BE INCLUDED IN THE PRICE BID PER LINEAR FOOT OF METAL PIPE.

INSTALLATION TYPE	MATERIAL REQUIREMENTS FOR STRUCTURAL BACKFILL AND STRUCTURAL BEDDING
TYPE 1	AGGREGATE BASE COURSE (CLASS 4, 5, 6, OR 7)
TYPE 2	SELECTED MATERIALS (CLASS SM-1, SM-2, OR SM-4) OR TYPE 1 INSTALLATION MATERIAL ③

③ SM-3 WILL NOT BE ALLOWED.

EQUIVALENT METAL THICKNESSES AND GAUGES

METAL THICKNESS IN INCHES			GAUGE NUMBER
STEEL			
ZINC COATED	UNCOATED	ALUMINUM	
0.064	0.0598	0.060	16
0.079	0.0747	0.075	14
0.109	0.1046	0.105	12
0.138	0.1345	0.135	10
0.168	0.1644	0.164	8

- LEGEND -

D_o = OUTSIDE DIAMETER OF PIPE
MAX. = MAXIMUM
MIN. = MINIMUM
= STRUCTURAL BACKFILL MATERIAL
= UNDISTURBED SOIL
EQUIV. DIA. = EQUIVALENT DIAMETER
H = FILL COVER HEIGHT OVER PIPE (FEET)

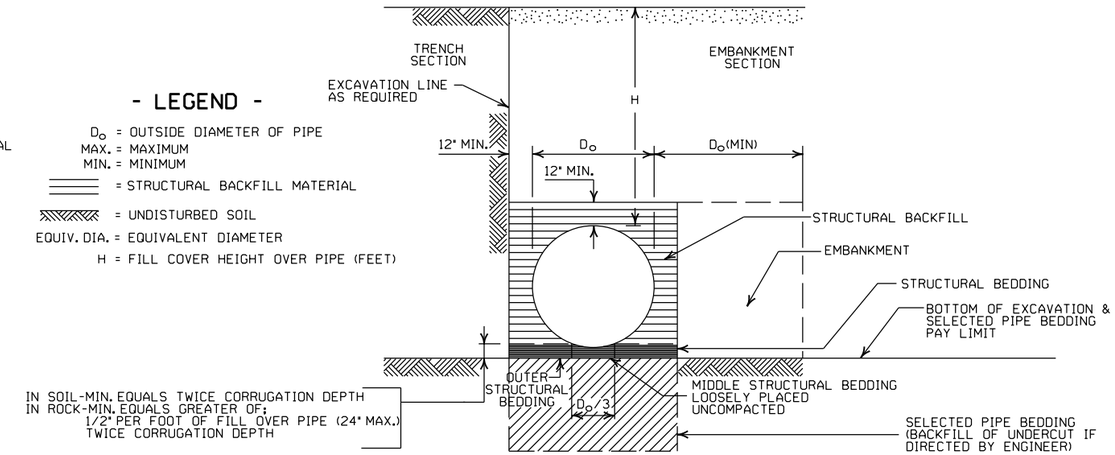

EMBANKMENT AND TRENCH INSTALLATIONS

1. STRUCTURAL BACKFILL, EMBANKMENT, AND OUTER STRUCTURAL BEDDING MATERIAL SHALL BE COMPACTED TO 95% OF THE MAXIMUM DENSITY ACCORDING TO THE TYPE OR CLASS OF MATERIAL USED.
2. INSTALLATION TYPE 1 OR 2 MAY BE USED FOR CORRUGATED STEEL OR ALUMINUM PIPE (ROUND).
3. INSTALALTION TYPE 1 SHALL BE USED FOR CORRUGATED STEEL OR ALUMINUM PIPE ARCHES WITH 2⅔" X ½" CORRUGATION.
4. INSTALLATION TYPE 1 OR 2 MAY BE USED FOR CORRUGATED STEEL OR ALUMINUM PIPE ARCHES WITH 3" X 1" OR 5" X 1" CORRUGATION.

GENERAL NOTES

1. METAL PIPE CULVERT CONSTRUCTION SHALL CONFORM TO ARKANSAS DEPARTMENT OF TRANSPORTATION STANDARD SPECIFICATIONS FOR HIGHWAY CONSTRUCTION (CURRENT EDITION), WITH APPLICABLE SUPPLEMENTAL SPECIFICATIONS AND SPECIAL PROVISIONS. UNLESS OTHERWISE NOTED IN THE PLANS, SECTION AND SUBSECTION REFER TO THE STANDARD CONSTRUCTION SPECIFICATIONS.
2. METAL PIPE CULVERT DESIGN SHALL CONFORM TO AASHTO LRFD BRIDGE DESIGN SPECIFICATIONS, FIFTH EDITION (2010) WITH 2010 INTERIMS.
3. METAL PIPE CULVERT MATERIALS AND INSTALLATIONS SHALL CONFORM TO SECTION 606 AND JOB SPECIAL PROVISION "METAL PIPE".
4. ALL PIPE SHALL BE PROTECTED DURING CONSTRUCTION BY A COVER SUFFICIENT TO PREVENT DAMAGE FROM PASSAGE OF EQUIPMENT.
5. THE MINIMUM TRENCH WIDTH SHALL BE THE OUTSIDE DIAMETER OF THE PIPE PLUS 24 INCHES. THE MAXIMUM ALLOWABLE TRENCH WIDTH SHALL BE THE MINIMUM WIDTH PRACTICABLE FOR WORKING CONDITIONS.
6. MULTIPLE PIPE CULVERTS SHALL BE INSTALLED WITH A MINIMUM CLEARANCE OF 24 INCHES BETWEEN STRINGS OF PIPE. REFER TO STD. DWG. FES-2 FOR MINIMUM CLEARANCE WHERE FLARED END SECTIONS ARE USED.
7. IMPERVIOUS MATERIAL SHOULD BE PLACED AS DIRECTED BY THE ENGINEER AT THE ENDS OF THE CULVERT TO PREVENT LOSS OF STRUCTURAL BEDDING WHEN PERVIOUS MATERIAL IS USED FOR STRUCTURAL BEDDING AND/OR BACKFILL.
8. WHEN DIRECTED BY THE ENGINEER, UNSUITABLE MATERIAL THAT IS ENCOUNTERED AT THE BOTTOM OF THE EXCAVATED TRENCH (BELOW THE AREA IDENTIFIED AS "STRUCTURAL BEDDING" ABOVE) WILL BE EXCAVATED AND REPLACED WITH SELECTED PIPE BEDDING. THE QUANTITY OF MATERIAL REQUIRED TO BACKFILL THE UNDERCUT AREA UP TO THE SELECTED PIPE BEDDING PAY LIMIT DESIGNATED ABOVE WILL BE MEASURED AND PAID FOR AS "SELECTED PIPE BEDDING."
9. WHEN THE EXISTING MATERIAL EXCAVATED FOR THE PIPE TRENCH IS DETERMINED BY THE ENGINEER TO BE UNSUITABLE FOR BACKFILLING THE PIPE (ABOVE THE AREA IDENTIFIED AS STRUCTURAL BACKFILL), BORROW MATERIAL OR MATERIAL FROM THE ROADWAY EXCAVATION WILL BE USED TO BACKFILL THE PIPE. IF SUITABLE MATERIAL IS NOT AVAILABLE, THE ENGINEER MAY AUTHORIZE THE USE OF "SELECTED PIPE BACKFILL."

① FOR MINIMUM COVER VALUES, "H" SHALL INCLUDE A MINIMUM 12" OF PAVEMENT AND/OR BASE.

② WHERE THE STANDARD 2 2/3"× ½" CORRUGATION AND GAUGE IS SPECIFIED FOR A GIVEN DIAMETER, A PIPE OF THE SAME DIAMETER WITH A 3" × 1" OR 5" × 1" CORRUGATION MAY BE SUBSTITUTED, PROVIDING IT IS GAUGED FOR A FILL HEIGHT CONDITION EQUAL TO OR GREATER THAN THE MAXIMUM FILL HEIGHT CONDITION FOR THE SPECIFIED GAUGE AND CORRUGATION.

DATE	REVISION	DATE FILMED
2-27-14	REVISED GENERAL NOTE 1.	
12-15-11	REVISED FOR LRFD DESIGN SPECS	
3-30-00	REVISED INSTALLATIONS	
11-06-97	ISSUED	

ARKANSAS STATE HIGHWAY COMMISSION

METAL PIPE CULVERT FILL HEIGHTS & BEDDING

STANDARD DRAWING PCM-1

NOTES:

1. REFER TO THE STRIPING DETAILS FOR PAVEMENT MARKING LINE WIDTHS.
2. THIS DRAWING SHALL BE USED IN CONJUNCTION WITH THE LATEST REVISED ADDITION OF THE "MANUAL ON UNIFORM TRAFFIC CONTROL DEVICES."
3. RAISED PAVEMENT MARKERS SHALL BE PLACED ON AN 80 FEET SPACING UNLESS OTHERWISE SHOWN IN THE PLANS.

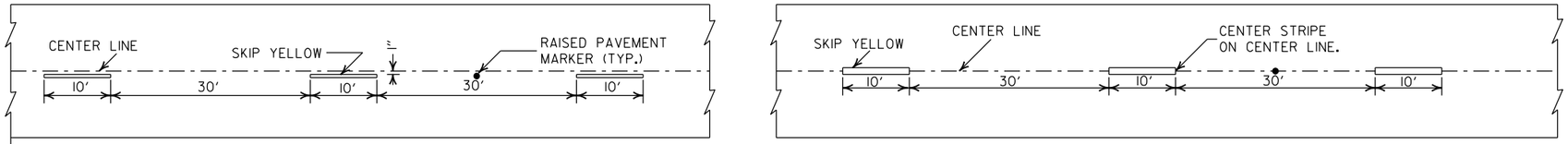

CONCRETE PAVEMENT

ASPHALT PAVEMENT

BROKEN LINE STRIPING

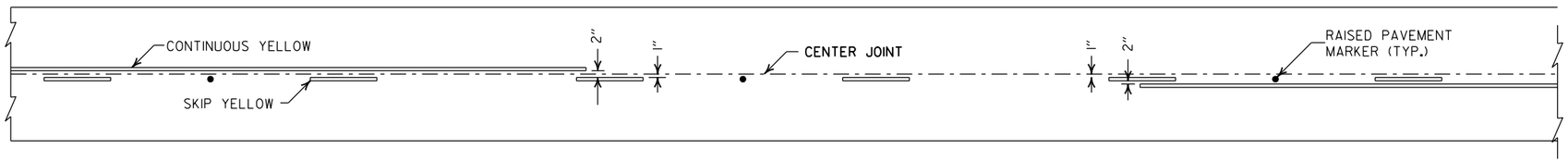

SOLID LINE STRIPING ON CONCRETE PAVEMENT

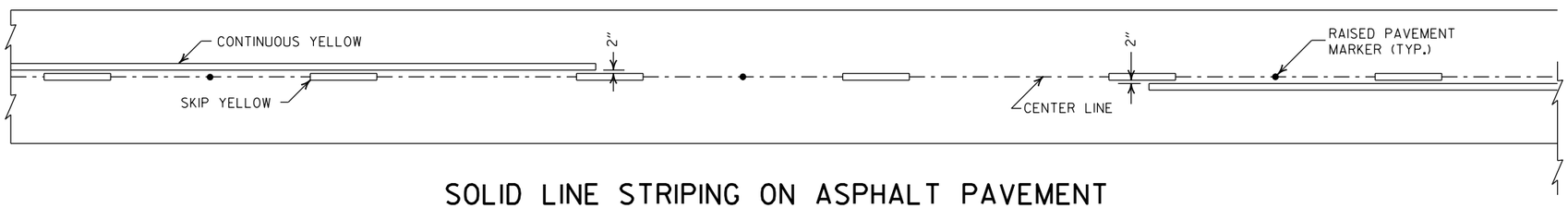

SOLID LINE STRIPING ON ASPHALT PAVEMENT

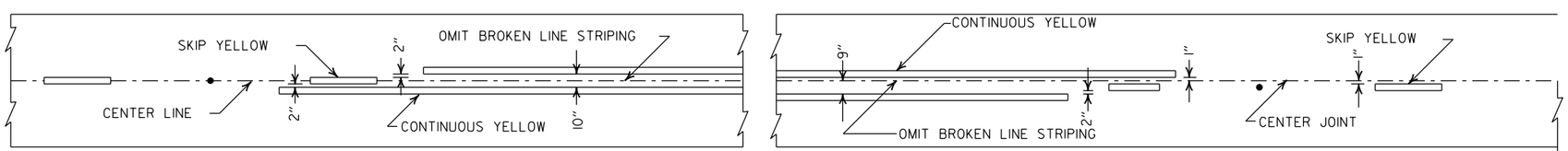

ASPHALT PAVEMENT

CONCRETE PAVEMENT

STRIPING AT ADJACENT NO PASSING LANES

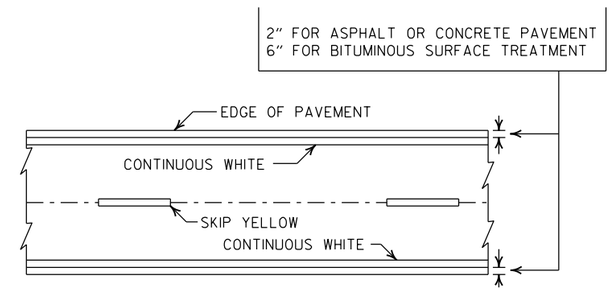

PAVEMENT EDGE LINE MARKING

NOTE:
THE RED LENS OF THE TYPE II R.P.M. SHALL FACE THE INCORRECT TRAFFIC MOVEMENT.

NOTE:
DIMENSIONS SHOWN FOR RAISED PAVEMENT MARKERS ARE TYPICAL. THE CONTRACTOR MAY SUBSTITUTE SIMILAR MARKERS WITH THE APPROVAL OF THE ENGINEER. REQUESTING APPROVAL FOR SIMILAR MARKERS MAY BE MADE BY REFERRING TO THE ARDOT QUALIFIED PRODUCTS LIST.

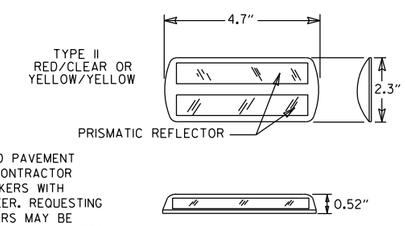

DETAIL OF STANDARD RAISED PAVEMENT MARKERS

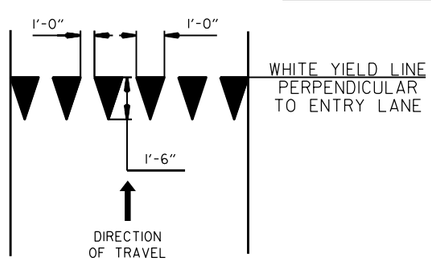

YIELD LINE DETAIL

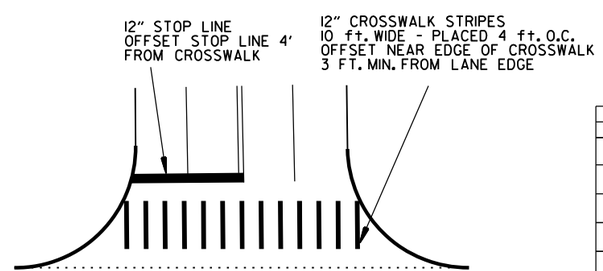

CROSSWALK AND STOP LINE DETAILS

DATE	REVISION	FILMED
2-27-20	REVISED STOP LINE DETAILS	
6-1-17	ADDED YIELD LINE DETAIL	
5-12-16	REVISED LINE WIDTHS, SPACING, & NOTES	
9-12-13	REVISED DETAIL OF STANDARD RAISED PAVEMENT MARKERS	
11-17-10	REVISED GENERAL NOTES & REMOVED PLOWABLE PVMT MRKRS	
11-18-04	REVISED NOTE 2 & GENERAL NOTES	
8-22-02	ADDED CROSSWALK & STOPBAR DTLS.	
7-02-98	ADDED DETAILS OF STD. RAISED PAV'T. MARKERS	
4-26-96	REV. NOTES 3&4; ADDED R.P.M.	
9-30-80	DRAWN	1-9-30-80

ARKANSAS STATE HIGHWAY COMMISSION

PAVEMENT MARKING DETAILS

STANDARD DRAWING PM-1

SUPERELEVATION TABLE FOR TWO - WAY TRAFFIC

DEGREE OF CURVE	30 MPH e	30 MPH Ls (FT) MINIMUM	30 MPH Ls (FT) DESIRABLE	35 MPH e	35 MPH Ls (FT) MINIMUM	35 MPH Ls (FT) DESIRABLE	40 MPH e	40 MPH Ls (FT) MINIMUM	40 MPH Ls (FT) DESIRABLE	45 MPH e	45 MPH Ls (FT) MINIMUM	45 MPH Ls (FT) DESIRABLE	50 MPH e	50 MPH Ls (FT) MINIMUM	50 MPH Ls (FT) DESIRABLE	55 MPH e	55 MPH Ls (FT) MINIMUM	55 MPH Ls (FT) DESIRABLE	60 MPH e	60 MPH Ls (FT) MINIMUM	60 MPH Ls (FT) DESIRABLE	65 MPH e	65 MPH Ls (FT) MINIMUM	65 MPH Ls (FT) DESIRABLE	70 MPH e	70 MPH Ls (FT) MINIMUM	70 MPH Ls (FT) DESIRABLE	75 MPH e	75 MPH Ls (FT) MINIMUM	75 MPH Ls (FT) DESIRABLE
0° 15'	NC			NC			NC			NC			NC			NC			NC			NC			NC			NC		
0° 30'	NC			NC			NC			NC			NC			NC			RC	96		RC	96		RC	96		0.022	101	
0° 45'	NC			NC			NC			NC			RC	96		RC	96		0.024	106		0.026	110		0.030	120		0.032	125	
1° 00'	NC			NC			NC			RC	90		0.022	101		0.026	110		0.030	120		0.034	130		0.038	139		0.042	149	300
1° 15'	NC			NC			RC	84		0.022	95		0.028	115		0.032	125		0.038	139		0.042	149		0.046	158	300	0.052	173	
1° 30'	NC			RC	78		0.022	88		0.028	108		0.032	125		0.038	139		0.044	154		0.050	168		0.056	182		0.062	197	
1° 45'	RC	72		RC	78		0.026	97		0.030	113		0.036	134		0.044	154		0.050	168	300	0.056	182	300	0.064	202		0.070	216	
2° 00'	RC	72		0.024	86		0.028	101		0.034	122		0.042	149		0.048	163		0.056	182		0.064	202		0.070	216		0.080	240	
2° 15'	RC	72		0.026	90		0.032	109		0.038	131		0.046	158		0.054	178	300	0.062	197		0.070	216		0.078	235		0.088	259	350
2° 30'	0.022	75		0.028	94		0.034	113		0.042	140		0.050	168		0.058	187		0.068	211		0.076	230		0.086	254	350	0.096	278	
2° 45'	0.024	79		0.030	98		0.038	122		0.046	149	200	0.054	178	250	0.064	202		0.072	221		0.082	245		0.092	269		0.100	288	400
3° 00'	0.026	83		0.034	105		0.040	126		0.050	158		0.058	187		0.068	211		0.078	235		0.088	259		0.098	283		D MAX = 2° 45'		
3° 15'	0.028	86		0.036	109		0.044	134	200	0.052	162		0.062	197		0.072	221		0.082	245		0.092	269		0.100	288	400			
3° 30'	0.030	90		0.038	113		0.046	139		0.056	171		0.066	206		0.076	230		0.086	254		0.096	278	350	D MAX = 3° 30'					
3° 45'	0.032	93		0.040	117		0.050	147		0.058	176		0.070	216		0.080	240		0.090	264		0.098	283							
4° 00'	0.034	97		0.042	121	200	0.052	151		0.062	185		0.072	221		0.084	250		0.094	274	350	0.100	288							
4° 15'	0.036	100		0.044	125		0.054	155		0.064	189		0.076	230		0.086	254		0.096	278		D MAX = 4° 15'								
4° 30'	0.036	100	200	0.046	129		0.056	160		0.068	198		0.078	235		0.090	264		0.098	283										
4° 45'	0.038	104		0.048	133		0.060	168		0.070	203		0.082	245		0.092	269	350	0.100	288										
5° 00'	0.040	108		0.050	137		0.062	172		0.072	207		0.084	250		0.094	274		D MAX = 5° 15'										
5° 30'	0.044	115		0.054	144		0.066	181		0.078	221	250	0.088	259		0.098	283													
6° 00'	0.046	119		0.058	152		0.070	189		0.082	230		0.092	269		0.100	288													
6° 30'	0.050	126		0.062	160		0.074	198		0.086	239		0.096	278	300	D MAX = 6° 30'														
7° 00'	0.052	130		0.064	164		0.078	206		0.090	248		0.098	283																
7° 30'	0.054	133		0.068	172		0.080	210		0.092	252	300	0.100	288																
8° 00'	0.058	140		0.070	176		0.084	219		0.094	257		D MAX = 8° 25'																	
8° 30'	0.060	144		0.072	179		0.086	223	250	0.096	261																			
9° 00'	0.062	148		0.076	187		0.088	227		0.098	266																			
9° 30'	0.064	151		0.078	191		0.092	235		0.100	270																			
10° 00'	0.066	155		0.080	195		0.094	240		D MAX = 10° 30'																				
11° 00'	0.070	162		0.084	203		0.096	244																						
12° 00'	0.074	169		0.088	211	250	0.098	248																						
13° 00'	0.076	173		0.090	215		0.100	252	300																					
14° 00'	0.080	180		0.094	222		D MAX = 13° 45'																							
15° 00'	0.082	184		0.096	226																									
16° 00'	0.086	191		0.098	230																									
17° 00'	0.088	194		0.100	234																									
18° 00'	0.090	198	250	D MAX = 19° 30'																										
19° 00'	0.092	202																												
20° 00'	0.094	205																												
21° 00'	0.096	209																												
22° 00'	0.096	209																												
23° 00'	0.098	212																												
24° 00'	0.098	212																												
25° 00'	0.100	216																												
D MAX = 28° 30'																														

ABBREVIATIONS

NC - NORMAL CROWN
RC - REVERSE CROWN, SUPERELEVATION AT NORMAL CROWN SLOPE
e - RATE OF SUPERELEVATION (FT. PER FT.)
Ls - LENGTH OF SUPERELEVATION TRANSITION (FT.)
L - DISTANCE FROM BEGINNING OF SUPERELEVATION TRANSITION TO ANY POINT (FT.)
d - WIDTH OF PAVEMENT (FT.) OR WIDTH OF SUBGRADE (FT.)
C - NORMAL CROWN (FT.)

GENERAL NOTES

1. ON PAVEMENT WITH TWO-WAY TRAFFIC, THE SUPERELEVATION SHALL BE REVOLVED ON THE INSIDE PAVEMENT EDGE UNLESS OTHERWISE NOTED ON THE PLANS
2. SUPERELEVATION VALUES SHOWN ON THE CROSS SECTIONS ARE VALUES (+) OR (-) TO BE ADDED TO OR SUBTRACTED FROM THE POINT OF CONTROL.
3. LENGTHS FOR L MAY BE ROUNDED IN MULTIPLES OF 25 FT. OR 50 FT. TO PERMIT SIMPLER CALCULATIONS.
4. PAVEMENTS WIDER THAN 2 LANES SHALL HAVE ADDITIONAL TRANSITION LENGTHS AS FOLLOWS:

3 LANE UNDIVIDED - - - - - +20%
4 LANE UNDIVIDED - - - - - +50%
5 LANE UNDIVIDED - - - - - +80%
6 LANE UNDIVIDED - - - - - +100%

NOTE: MAINTAIN NORMAL CROWN ON INSIDE UNTIL SUPERELEVATION EXCEEDS 2C.

RATE OF SUPERELEVATION SHALL BE COMPUTED ON STRAIGHT LINE METHOD USING APPLICABLE Ls.

SUPERELEVATION FORMULA $= \frac{Lde}{Ls}$

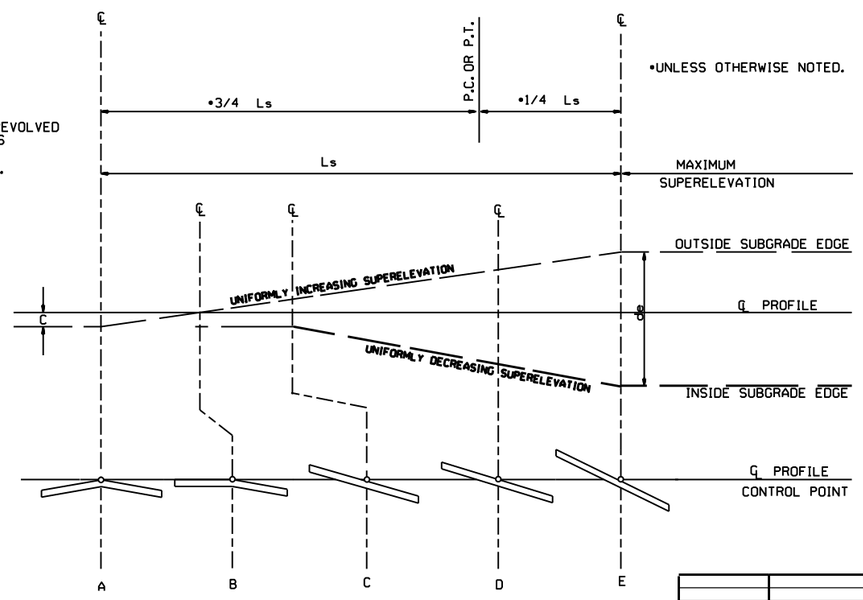

STANDARD METHOD WHEN SUPERELEVATION REVOLVES AROUND CENTER LINE

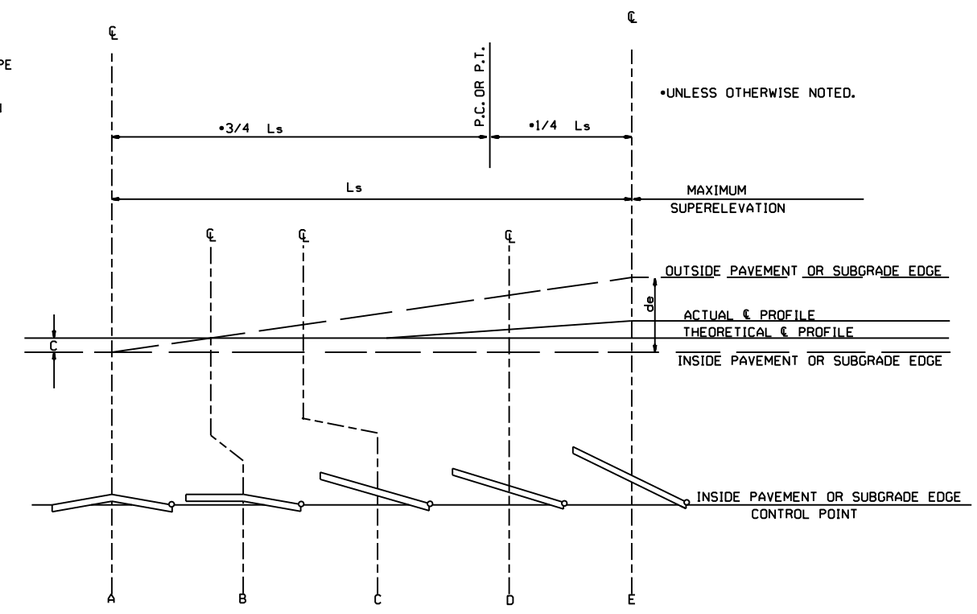

STANDARD METHOD WHEN SUPERELEVATION REVOLVES AROUND INNER SUBGRADE POINT OR INNER PAVEMENT EDGE

NOTE: MAINTAIN NORMAL CROWN ON INSIDE UNTIL SUPERELEVATION EXCEEDS 2C.

DATE	REVISION	DATE FILMED
11-07-19	REVISED SUPERELEVATION TABLE	
10-18-96	ADDED FORMULA	
01-09-87	ISSUED	534-1-9-87

ARKANSAS STATE HIGHWAY COMMISSION

TABLES AND METHOD OF SUPERELEVATION FOR TWO-WAY TRAFFIC

STANDARD DRAWING SE-2

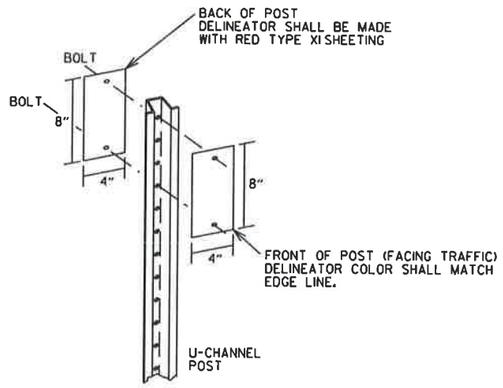

TYPE 2 DELINEATOR DETAILS

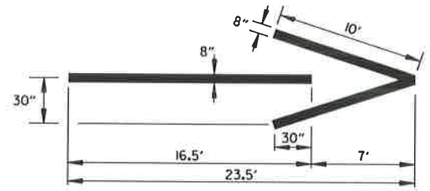

THERMOPLASTIC WRONG-WAY
PAVEMENT ARROWS

NOTE: THERMOPLASTIC WRONG-WAY PAVEMENT ARROWS TO BE PAID FOR AS THERMOPLASTIC PAVEMENT MARKING (ARROWS).

LEGEND

DELINEATOR

NOTE: WHEN UNIFORM SPACING IS INTERRUPTED BY ROADSIDE OBSTACLES, DELINEATORS ADJACENT TO THE ROADSIDE OBSTACLES MAY BE RELOCATED IN EITHER DIRECTION FOR A DISTANCE NOT EXCEEDING ONE QUARTER OF THE UNIFORM SPACING OR MAY BE ELIMINATED AS DIRECTED BY THE ENGINEER.

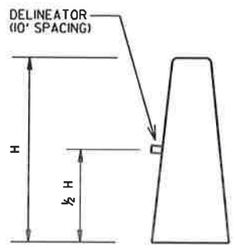

PERMANENT BARRIER WALL
DELINEATOR DETAIL

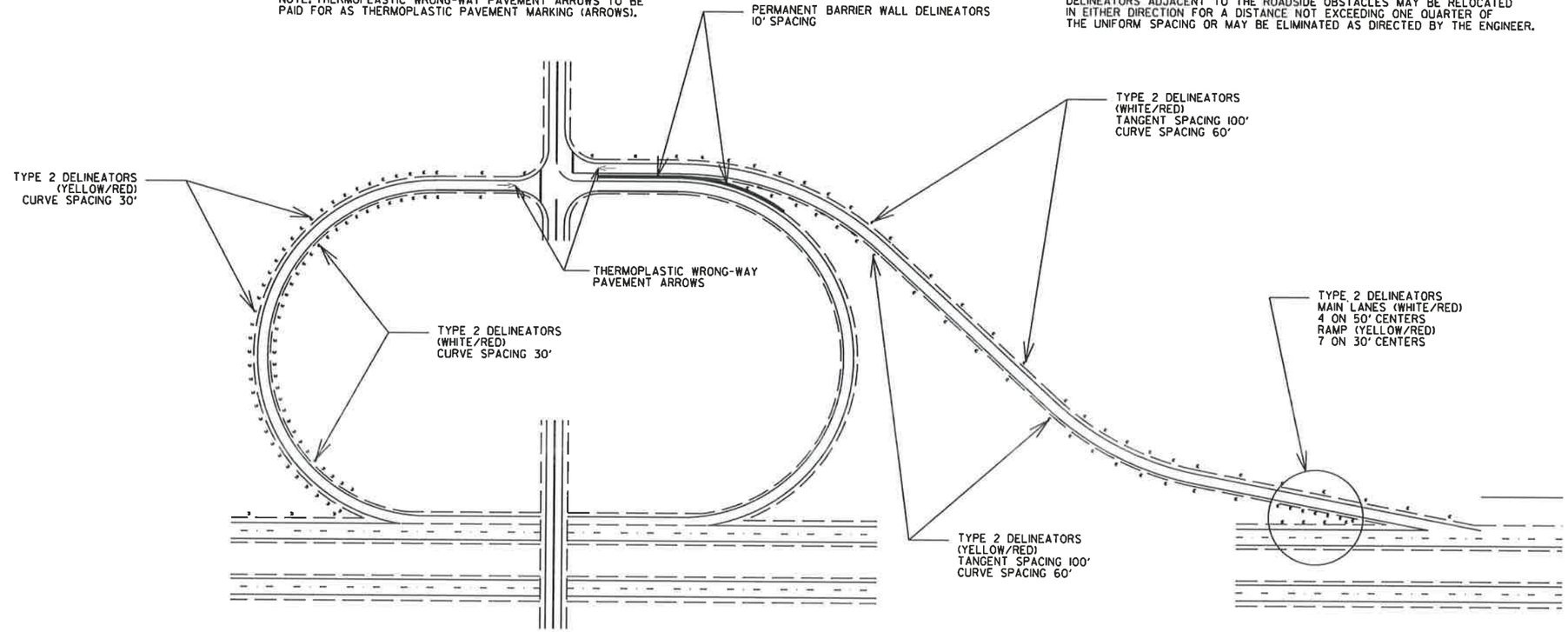

TYPICAL EXIT RAMP DELINEATOR PLACEMENT

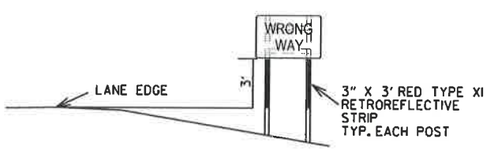

WRONG-WAY SIGN ASSEMBLY DETAILS

NOTES
1. WRONG-WAY SIGNS MAY BE MOUNTED ON THE BACK SIDE OF EXISTING SIGN SUPPORTS WHERE POSSIBLE.
2. WRONG-WAY SIGNS ARE NORMALLY GATED, BUT MAY BE OFFSET WHEN BARRIER WALLS ARE PRESENT ON THE INSIDE SHOULDER. IN SUCH CASES, THE SIGN ON THE INSIDE SHOULDER SIDE MAY BE LOCATED PAST THE END OF THE BARRIER WALL. IN RARE CASES WHERE THE BARRIER WALL EXTENDS TO OR NEAR THE MAIN LANES, BOTH SIGNS MAY BE LOCATED ON THE OUTSIDE SHOULDER SIDE OF THE RAMP, WITH APPROXIMATELY 300' SPACING BETWEEN THE SIGNS.

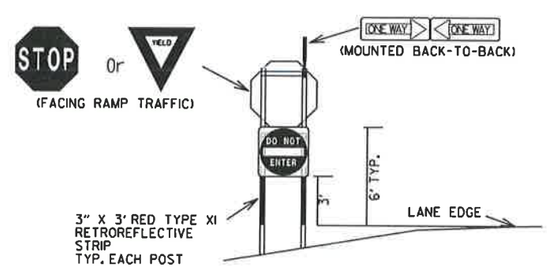

RAMP INTERSECTION SIGN ASSEMBLY DETAILS

THE DELINEATORS SHALL BE PLACED AT A 4' HEIGHT MEASURED FROM THE PAVEMENT EDGE TO THE BOTTOM OF THE DELINEATOR. DELINEATOR POSTS SHALL BE PLACED 2 TO 8 FT. OUTSIDE THE OUTER EDGE OF THE SHOULDER, OR IF APPROPRIATE, IN LINE WITH THE ROADSIDE BARRIER THAT IS 8 FT. OR LESS OUTSIDE THE OUTER EDGE OF THE SHOULDER.

DELINEATOR SPACING IN CURVES SHALL BE REDUCED TO 30' WHEN THE RAMP ADVISORY SPEED IS 30 MPH OR LESS.

IF MULTIPLE LANES EXIST AT THE RAMP TERMINAL, THE THERMOPLASTIC WRONG-WAY ARROW SHALL BE PLACED AS CLOSE TO THE RAMP TERMINAL TURNOUT AS POSSIBLE.

DATE	REVISION	FILMED
11-16-17	ADDED NOTES	
06-01-17	RE-DRAWN	
09-12-13	ISSUED AS STANDARD DRAWING	

ARKANSAS STATE HIGHWAY COMMISSION

TYPICAL EXIT RAMP SIGN AND DELINEATOR DETAILS

STANDARD DRAWING SHS-8

R1-1

STANDARD 30"X30"
EXPRESSWAY 36"X36"
SPECIAL 48"X48"

R1-2

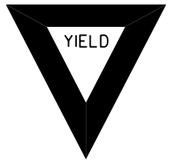

STD. 36"X36"X36"
EXPWY. 48"X48"X48"
FWY. 60"X60"X60"

R2-1

STD. 24"X30"
EXPWY. 36"X48"
FWY. 48"X60"

W3-5

STD. 36"X36"
EXPWY. 48"X48"
FWY. 48"X48"

W3-5a

STD. 36"X36"
EXPWY. 48"X48"
FWY. 48"X48"

R4-1

STD. 24"X30"
EXPWY. 36"X48"
FWY. 48"X60"

R4-2

STD. 24"X30"
EXPWY. 36"X48"
FWY. 48"X60"

R5-1

STD. 30"X30"
EXPWY. 36"X36"
SPECIAL 48"X48"

R11-2

48"X30"

R11-3A

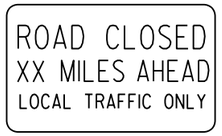

60"X30"

R11-4

60"X30"

W21-5a

STD. 36"X36"
FWY. 48"X48"

W1-1

STD. 36"X36"
FWY. 48"X48"

W1-2

STD. 36"X36"
FWY. 48"X48"

W1-3

STD. 48"X48"

W1-4

STD. 48"X48"

W1-6

STD. 48"X24"
SPECIAL 60"X30"

W1-8

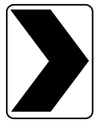

STD. 18"X24"
SPECIAL 24"X30"
EXPWY. 30"X36"
FWY. 36"X48"

W3-1

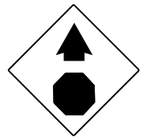

STD. 36"X36"
SPECIAL 48"X48"

W3-2

STD. 36"X36"
SPECIAL 48"X48"

W4-2

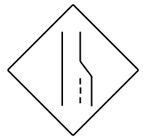

STD. 36"X36"
FWY. 48"X48"

W5-1

STD. 36"X36"
SPECIAL 48"X48"

W6-3

EXPWY. 36"X36"
SPECIAL 48"X48"

W8-7

EXPWY. 36"X36"
FWY. 48"X48"

W9-2

STD. 36"X36"
FWY. 48"X48"

W13-1

STD. 24"X24"

W20-1

STD. 48"X48"

W20-2

STD. 48"X48"

W20-3

STD. 48"X48"

W20-4

STD. 48"X48"

W20-5

STD. 48"X48"

W20-7a

STD. 36"X36"
FWY. 48"X48"

W21-2

STD. 30"X30"
SPECIAL 36"X36"

W21-5

STD. 30"X30"
SPECIAL 36"X36"

W24-1

STD. 36"X36"

W1-4b

STD. 48"X48"

R56-1

STD. 18"X18"

W8-11

STD. 36"X36"
FWY. 48"X48"

W8-9

STD. 36"X36"
FWY. 48"X48"

G20-1

60"X24"

G20-2

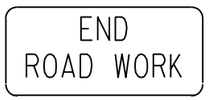

48"X24"

OM-3L OM-3R

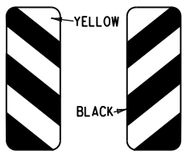

12"X36"

M4-9

STD. 30"X24"
SPECIAL 48"X36"
SPECIAL 60"X48"

M4-10

48"X18"

R55-1

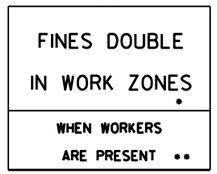

36"X60"

• USE 6" C LETTERS
•• USE 4" D LETTERS

ADVANCE DISTANCES
(XXXX)

500 FT	½ MILE
1000 FT	¾ MILE
1500 FT	1 MILE AHEAD

GENERAL NOTES:

1. ALL TRAFFIC CONTROL DEVICES USED ON ROAD CONSTRUCTION SHALL CONFORM TO THE MANUAL ON UNIFORM TRAFFIC CONTROL DEVICES, LATEST EDITION, AND TO THE STANDARD HIGHWAY SIGNS, LATEST EDITION, OR AS APPROVED BY THE FEDERAL HIGHWAY ADMINISTRATION.

2. TRAFFIC CONTROL DEVICES SHALL BE SET UP JUST BEFORE THE START OF CONSTRUCTION OPERATIONS AND SHALL BE PROPERLY MAINTAINED DURING THE TIME SUCH CONDITIONS EXIST. THEY SHALL REMAIN IN PLACE ONLY AS LONG AS NEEDED AND REMOVED THEREAFTER.

3. EXISTING SIGNS AND CONSTRUCTION SIGNS SHALL BE KEPT IN PROPER POSITION, AND BE CLEAN AND LEGIBLE AT ALL TIMES. SIGNS THAT DO NOT APPLY TO EXISTING CONDITIONS SHALL BE REMOVED. SIGNS THAT ARE DAMAGED, DEFACED, OR THAT ACCUMULATE DIRT DURING CONSTRUCTION SHALL BE CLEANED, REPAIRED, OR REPLACED.

• 4. SIGNS ARE USUALLY MOUNTED ON A SINGLE POST, ALTHOUGH THOSE WIDER THAN 36" OR LARGER THAN 10 SQ. FT. SHALL BE MOUNTED ON TWO POSTS OR ABOVE A TYPE III BARRICADE.

• 5. SIGN POSTS DIRECT BURIED IN SOIL SHALL BE 2 LB. MINIMUM CHANNEL POST OR 4"x4" WOOD POSTS. CHANNEL POSTS SHALL BE PAINTED GREEN. WOOD POSTS SHALL BE PAINTED WHITE. ALL POSTS SHALL BE NEATLY CONSTRUCTED, AND SHALL BE REPLUMBED, CLEANED, OR REPAIRED AS NEEDED FOR THE DURATION OF THE JOB. THERE SHALL NOT BE MORE THAN 2 POSTS IN A 7' PATH FOR WOOD OR CHANNEL POSTS. ANY CHANNEL POST SPLICE SHALL BE IN ACCORDANCE WITH STANDARD DRAWING TC-3.

6. POST MOUNTED SIGNS IN RURAL AREAS SHALL BE CONSTRUCTED WITH THE NEAR EDGE OF THE SIGN FROM 6 TO 12 FEET FROM THE PAVEMENT EDGE. SIGNS IN URBAN AREAS AND BARRICADE MOUNTED SIGNS SHALL BE MOUNTED A MINIMUM OF 2 FEET FROM THE PAVEMENT EDGE.

7. ALL POST AND BARRICADE MOUNTED SIGNS MOUNTED IN URBAN AREAS SHALL BE MOUNTED A MINIMUM DISTANCE OF 7' FROM THE BOTTOM OF THE SIGN TO THE ROADWAY SURFACE. ALL POST AND BARRICADE MOUNTED SIGNS MOUNTED IN RURAL AREAS SHALL BE MOUNTED A MINIMUM DISTANCE OF 7' FROM THE BOTTOM OF THE SIGN TO THE ROADWAY SURFACE, EXCEPT A MINIMUM OF 6' SHALL BE USED WHEN MOUNTING AN ADVISORY SIGN BELOW A WARNING SIGN. TEMPORARY SIGNS MAY BE MOUNTED ON PORTABLE SUPPORTS FOR INTERMEDIATE TERM STATIONARY WORK CONDITIONS. THE SIGNS MINIMUM MOUNTING HEIGHT SHALL BE 5'. RETROREFLECTIVE DEVICES SHALL BE USED. TEMPORARY SIGNS MAY BE MOUNTED ON PORTABLE SUPPORTS FOR SHORT-TERM, SHORT DURATION, AND MOBILE CONDITIONS. THEY SHALL BE NO LESS THAN ONE (1) FOOT ABOVE THE TRAVELED WAY. LONG-TERM STATIONARY SIGNS SHALL BE DIRECT BURIED IN SOIL, UNLESS CONDITIONS NECESSITATE THE USE OF PORTABLE SIGNS, OR AS APPROVED BY THE ENGINEER. CONCRETE PADS, CONCRETE OR ROCK BALLAST, OR OTHER SOLID MATERIALS SHALL NOT BE UTILIZED WITH PORTABLE SIGN SUPPORTS.

8. FLAGGERS SHALL USE REFLECTORIZED STOP-SLOW PADDLES. FLAGS MAY BE USED ONLY FOR EMERGENCY SITUATIONS.

9. MOST OF THE SIGNS SHOWN ARE ORIENTED TO THE RIGHT. HOWEVER, THIS DOES NOT PRECLUDE THE USE OF MIRROR IMAGES OF THESE SIGNS WHERE THE REVERSE ORIENTATION MIGHT BETTER CONVEY TO MOTORISTS THE PROPER DIRECTION OF MOVEMENT.

10. R55-1 SIGNS SHALL BE PLACED AT LEAST 1500' BUT NOT MORE THAN 1 MILE IN ADVANCE OF THE WORK ZONE. IF A SPEED LIMIT REDUCTION IS IN EFFECT, THE SIGN SHALL BE PLACED A MINIMUM OF 500' IN ADVANCE OF THE "REDUCED SPEED AHEAD" SIGN.

• NOTE: SUPPORTS FOR SIGNS, BARRICADES, AND VERTICAL PANELS THAT ARE DIFFERENT FROM THE REQUIREMENTS SHOWN IN NOTES 4 & 5, BUT MEET THE REQUIREMENTS OF MANUAL FOR ASSESSING SAFETY HARDWARE (MASH), WILL BE ACCEPTED. COMPLIANCE WITH THE REQUIREMENTS OF MANUAL FOR ASSESSING SAFETY HARDWARE (MASH) IS REQUIRED FOR ALL PROJECTS.

DATE	REVISION	FILMED
11-07-19	REVISED FOR MASH	
4-13-17	DELETED RSP-1 & ADDED W21-5a	
9-2-15	REVISED REDUCED SPEED LIMIT AHEAD SIGNS REVISED ROAD WORK NEXT XX MILES	
12-15-11	REVISED W24-1	
11-17-10	DELETED W8-9a & ADDED W8-9	
10-15-09	ADDED REFERENCE TO MASH & ADDED SIGN W24-1	
4-17-08	REVISED SIGN DESIGNATIONS	
11-18-04	REVISED NOTES	
10-9-03	REVISED NOTE 1	
11-16-01	REVISED NOTE 7	
9-28-00	REVISED NOTE	
11-18-98	ADDED NOTE	
6-26-97	REVISED NOTE 5	
4-03-97	REVISED NOTE 5	
10-18-96	ADDED CONTROLLED ACCESS HWY. SIGN & TO NOTE 7	
10-12-95	ADDED R55-1	
6-8-95	REVISED TO CORRECT SIGN ILLUSTRATIONS	6-8-95
2-2-95	REVISED PER PART VI, MUTCD SEPT. 3, 1993	
8-15-91	DRAWN AND PLACED IN USE	

ARKANSAS STATE HIGHWAY COMMISSION

STANDARD TRAFFIC CONTROLS FOR HIGHWAY CONSTRUCTION

STANDARD DRAWING TC-1

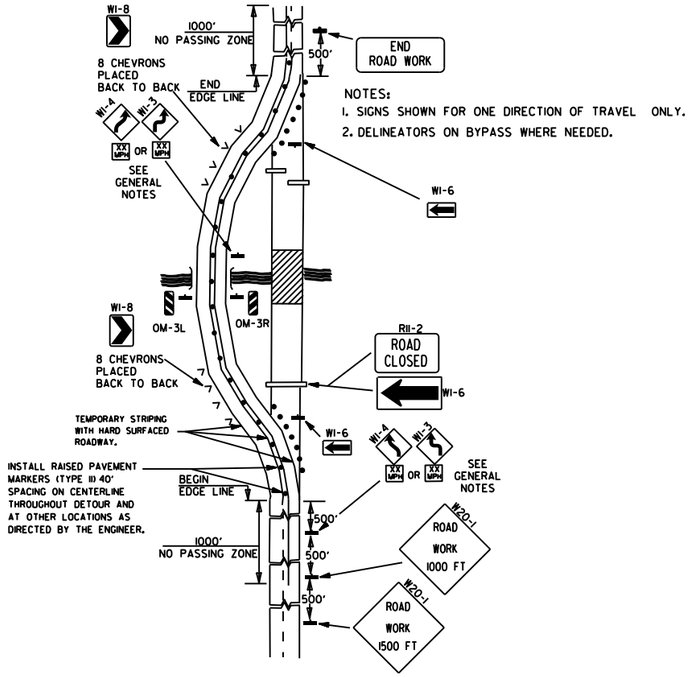

NOTES:
1. SIGNS SHOWN FOR ONE DIRECTION OF TRAVEL ONLY.
2. DELINEATORS ON BYPASS WHERE NEEDED.

(A) TYPICAL APPLICATION OF TRAFFIC CONTROL DEVICES ON A 2-LANE HIGHWAY WHERE THE ENTIRE ROADWAY IS CLOSED AND A BYPASS DETOUR IS PROVIDED.

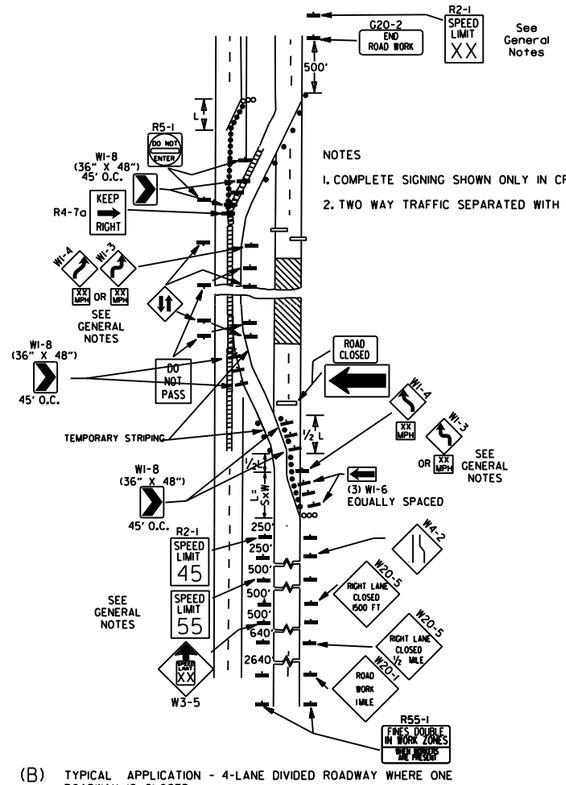

NOTES
1. COMPLETE SIGNING SHOWN ONLY IN CROSSOVER DIRECTION.
2. TWO WAY TRAFFIC SEPARATED WITH POSITIVE BARRIER.

(B) TYPICAL APPLICATION - 4-LANE DIVIDED ROADWAY WHERE ONE ROADWAY IS CLOSED.

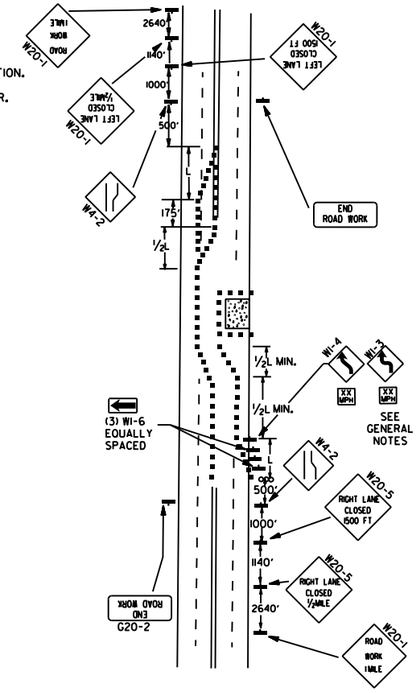

(C) TYPICAL APPLICATION - 4-LANE UNDIVIDED ROADWAY WHERE HALF OF THE ROADWAY IS CLOSED.

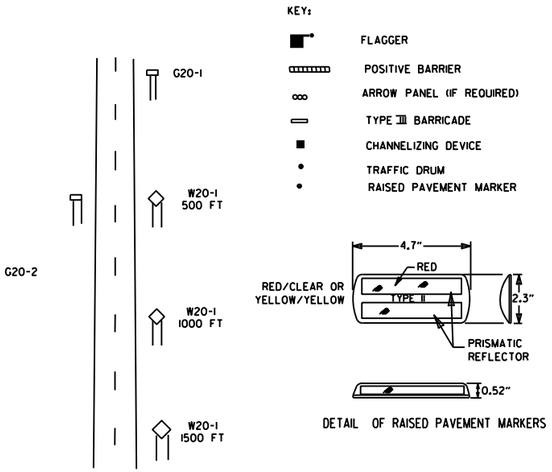

TYPICAL ADVANCE WARNING SIGN PLACEMENT

TAPER FORMULAE:

$L = SXW$ FOR SPEEDS OF 45MPH OR MORE.

$L = \frac{WS^2}{60}$ FOR SPEEDS OF 40MPH OR LESS.

WHERE:

L= MINIMUM LENGTH OF TAPER.

S= NUMERICAL VALUE OF POSTED SPEED LIMIT PRIOR TO WORK OR 85TH PERCENTILE SPEED.

W= WIDTH OF OFFSET.

GENERAL NOTES:

1. THE MAINTENANCE DIVISION SHALL CONDUCT A BALL BANK STUDY TO DETERMINE THE ADVISORY SPEED LIMIT PRIOR TO OPENING TO TRAFFIC. THE ADVISORY SPEED WILL BE POSTED ON W1-3 OR W1-4 CURVE WARNING SIGNS. USE W1-4 WHEN SPEED IS GREATER THAN 30MPH AND W1-3 WHEN 30MPH OR LESS
2. WHEN THE EXISTING SPEED LIMIT IS 55MPH AND THE PLANS REQUIRE A SPEED LIMIT OF 45MPH, THE R2-1(55) SHALL BE OMITTED AND THE W3-5 SHALL BE INSTALLED AT THAT LOCATION. ADDITIONAL R2-1 45MPH SPEED LIMIT SIGNS SHALL BE INSTALLED AT A MAXIMUM OF 1MILE INTERVALS. AT THE END OF THE WORK AREA A R2-1(XX) SHALL BE INSTALLED TO MATCH ORIGINAL SPEED LIMIT.
3. WHEN THE EXISTING SPEED LIMIT IS 65MPH AND THE PLANS REQUIRE A SPEED LIMIT OF 55MPH, THE R2-1(45) SHALL BE OMITTED. ADDITIONAL R2-1 55MPH SPEED LIMIT SIGNS SHALL BE INSTALLED AT A MAXIMUM OF 1MILE INTERVALS. AT THE END OF THE WORK AREA A R2-1(XX) SHALL BE INSTALLED TO MATCH ORIGINAL SPEED LIMIT.
4. THE MAXIMUM SPACING BETWEEN CHANNELIZING DEVICES IN A TAPER SHOULD BE APPROXIMATELY EQUAL IN FEET TO THE SPEED LIMIT. BEYOND THE TAPER, MAXIMUM SPACING SHALL BE TWO TIMES THE SPEED LIMIT, OR AS DIRECTED BY THE ENGINEER.
5. WARNING LIGHTS AND/OR FLAGS MAY BE MOUNTED TO SIGNS OR CHANNELIZING DEVICES AT NIGHT AS NEEDED.
6. PAVEMENT MARKINGS NO LONGER APPLICABLE WHICH MIGHT CREATE CONFUSION IN THE MINDS OF VEHICLE OPERATORS SHALL BE REMOVED OR OBLITERATED AS SOON AS PRACTICABLE.
7. TRAILER MOUNTED DEVICES SUCH AS ARROW PANELS AND PORTABLE CHANGEABLE MESSAGE SIGNS SHALL BE DELINEATED BY AFFIXING CONSPICUITY MATERIAL IN A CONTINUOUS LINE ON THE FACE OF THE TRAILER. WHEN PLACED ON OR ADJACENT TO THE SHOULDER AND NOT BEHIND A POSITIVE BARRIER, THESE DEVICES SHALL BE DELINEATED BY PLACING FIVE (5) TRAFFIC DRUMS, EQUALLY SPACED ALONG THE TRAFFIC SIDE OF THE DEVICE. PAYMENT FOR TRAFFIC DRUMS SHALL BE CONSIDERED INCLUDED IN THE PRICE BID FOR VARIOUS TRAILER MOUNTED DEVICES.
8. DIMENSIONS SHOWN FOR RAISED PAVEMENT MARKERS ARE TYPICAL. THE CONTRACTOR MAY SUBSTITUTE SIMILAR MARKERS WITH THE APPROVAL OF THE ENGINEER. REQUESTING APPROVAL FOR SIMILAR MARKERS MAY BE MADE BY REFERRING TO THE ARDOT QUALIFIED PRODUCTS LIST.
9. ALL TRAILER MOUNTED DEVICES SUCH AS ARROW PANELS AND PORTABLE CHANGEABLE MESSAGE SIGNS SHALL MEET THE REQUIREMENTS OF THE MANUAL FOR ASSESSING SAFETY HARDWARE (MASH).

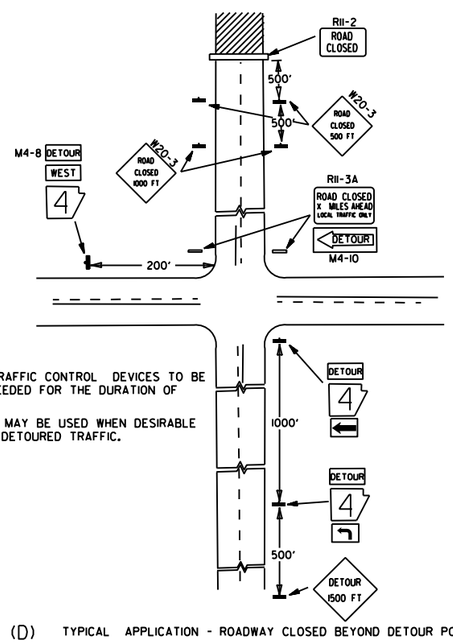

NOTES:
1. REGULATORY TRAFFIC CONTROL DEVICES TO BE MODIFIED AS NEEDED FOR THE DURATION OF THE DETOUR.
2. STREET NAMES MAY BE USED WHEN DESIRABLE FOR DIRECTING DETOURED TRAFFIC.

(D) TYPICAL APPLICATION - ROADWAY CLOSED BEYOND DETOUR POINT.

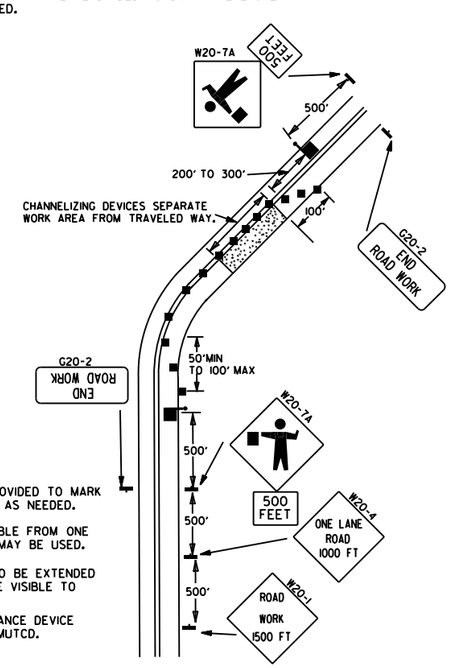

NOTES:
1. FLOOD LIGHTS SHOULD BE PROVIDED TO MARK FLAGGER STATIONS AT NIGHT AS NEEDED.
2. IF ENTIRE WORK AREA IS VISIBLE FROM ONE STATION, A SINGLE FLAGGER MAY BE USED.
3. CHANNELIZING DEVICES ARE TO BE EXTENDED TO A POINT WHERE THEY ARE VISIBLE TO APPROACHING TRAFFIC.
4. AUTOMATED FLAGGER ASSISTANCE DEVICE (AFAD) OPTIONAL. REFER TO MUTCD.

(E) TYPICAL APPLICATION OF TRAFFIC CONTROL DEVICES ON 2-LANE HIGHWAY WHERE ONE LANE IS CLOSED AND FLAGGING IS PROVIDED.

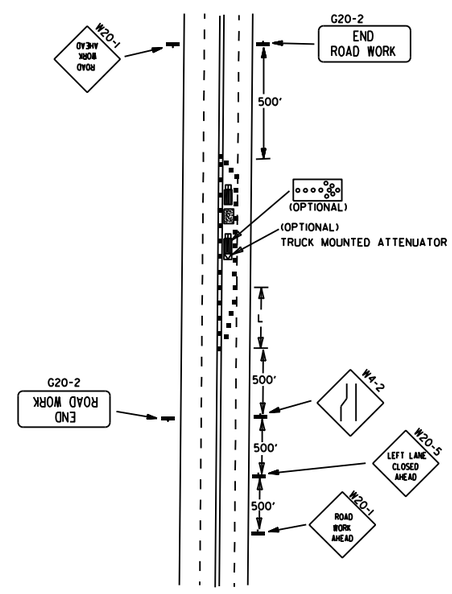

(F) TYPICAL APPLICATION - 4-LANE UNDIVIDED ROADWAY WITH INSIDE LANE CLOSED.

DATE	REVISION	FILMED
05-20-21	REVISED NOTE 7	
11-07-19	REVISED NOTE 1, ADDED NOTE 9	
9-2-15	REVISED NOTE 2, ADDED NOTE 8, REVISED DRAWING (A) & REPLACED R2-5A WITH W3-5	
9-12-13	REVISED DETAIL OF RAISED PAVEMENT MARKERS	
3-11-10	ADDED (AFAD)	
11-20-08	REVISED SIGN DESIGNATIONS	
11-18-04	ADDED GENERAL NOTE	
10-18-96	ADDED R55-1	
4-26-96	CORRECTED (c) BEHIND G20-2	
6-8-95	CORRECTED SIGN IDENT. ON W1-4A	6-8-95
2-2-95	REVISED PER PART VI, MUTCD, SEPT. 3, 1993	
8-15-91	DRAWN AND PLACED IN USE	

ARKANSAS STATE HIGHWAY COMMISSION

STANDARD TRAFFIC CONTROLS FOR HIGHWAY CONSTRUCTION

STANDARD DRAWING TC-2

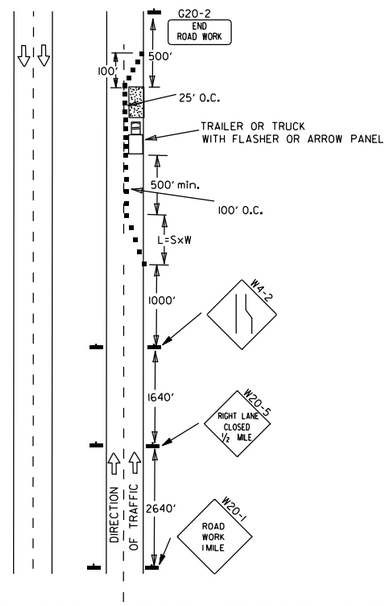

(A) TYPICAL APPLICATION - DAYTIME MAINTENANCE OPERATIONS OF SHORT DURATION ON A 4-LANE DIVIDED ROADWAY WHERE HALF OF THE ROADWAY IS CLOSED.

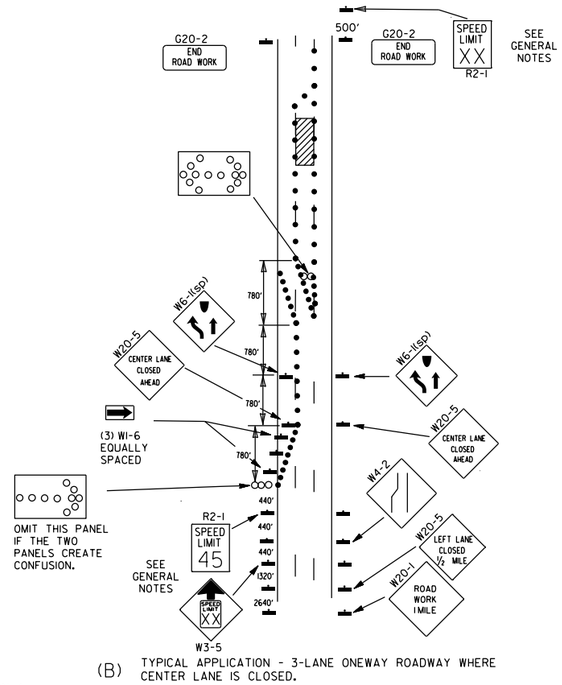

(B) TYPICAL APPLICATION - 3-LANE ONEWAY ROADWAY WHERE CENTER LANE IS CLOSED.

KEY:

- ARROW PANEL (IF REQUIRED)
- ■ CHANNELIZING DEVICE
- ● TRAFFIC DRUM

GENERAL NOTES:

1. A SPEED LIMIT REDUCTION MAY BE IMPLEMENTED ONLY WHEN DESIGNATED IN THE PLAN OR WHEN RECOMMENDED BY THE ROADWAY DESIGN DIVISION.
2. WHEN THE EXISTING SPEED LIMIT IS 55MPH AND THE PLANS REQUIRE A SPEED LIMIT OF 45MPH, THE R2-1(55) SHALL BE OMITTED AND THE W3-5 SHALL BE INSTALLED AT THAT LOCATION. ADDITIONAL R2-1 45MPH SPEED LIMIT SIGNS SHALL BE INSTALLED AT A MAXIMUM OF 1 MILE INTERVALS. AT THE END OF THE WORK AREA A R2-1(XX) SHALL BE INSTALLED TO MATCH ORIGINAL SPEED LIMIT.
3. WHEN THE EXISTING SPEED LIMIT IS 65MPH AND THE PLANS REQUIRE A SPEED LIMIT OF 55MPH, THE R2-1(45) SHALL BE OMITTED. ADDITIONAL R2-1 55MPH SPEED LIMIT SIGNS SHALL BE INSTALLED AT A MAXIMUM OF 1 MILE INTERVALS. AT THE END OF THE WORK AREA A R2-1(XX) SHALL BE INSTALLED TO MATCH ORIGINAL SPEED LIMIT.
4. THE MAXIMUM SPACING BETWEEN CHANNELIZING DEVICES IN A TAPER SHOULD BE APPROXIMATELY EQUAL IN FEET TO THE SPEED LIMIT. BEYOND THE TAPER, MAXIMUM SPACING SHALL BE TWO TIMES THE SPEED LIMIT OR AS DIRECTED BY THE ENGINEER.
5. WARNING LIGHTS AND/OR FLAGS MAY BE MOUNTED TO SIGNS OR CHANNELIZING DEVICES AT NIGHT AS NEEDED.
6. PAVEMENT MARKINGS NO LONGER APPLICABLE WHICH MIGHT CREATE CONFUSION IN THE MINDS OF VEHICLE OPERATORS SHALL BE REMOVED OR OBLITERATED AS SOON AS PRACTICABLE.
7. THE G20-1 SIGN WILL BE REQUIRED ON JOBS OF OVER TWO MILES IN LENGTH. WHEN THE LANE CLOSURE IS NOT AT THE BEGINNING OF THE PROJECT, THE G20-1 SIGN SHALL BE ERECTED 125' IN ADVANCE OF THE JOB LIMIT. ADDITIONAL W20-1 (1 MILE) SIGNS ARE NOT REQUIRED IN ADVANCE OF LANE CLOSURES THAT BEGIN INSIDE THE PROJECT LIMITS.
8. FLAGGERS SHALL USE STOP/SLOW PADDLES FOR CONTROLLING TRAFFIC THROUGH WORK ZONES. FLAGS MAY BE USED ONLY FOR EMERGENCY SITUATIONS.
9. ALL PLASTIC DRUMS AND CONES SHALL MEET THE REQUIREMENTS OF MANUAL FOR ASSESSING SAFETY HARDWARE (MASH).
10. TRAILER MOUNTED DEVICES SUCH AS ARROW PANELS AND PORTABLE CHANGEABLE MESSAGE SIGNS SHALL BE DELINEATED BY AFFIXING CONSPICUITY MATERIAL IN A CONTINUOUS LINE ON THE FACE OF THE TRAILER. WHEN PLACED ON OR ADJACENT TO THE SHOULDER AND NOT BEHIND A POSITIVE BARRIER, THESE DEVICES SHALL BE DELINEATED BY PLACING FIVE (5) TRAFFIC DRUMS, EQUALLY SPACED ALONG THE TRAFFIC SIDE OF THE DEVICE. PAYMENT FOR TRAFFIC DRUMS SHALL BE CONSIDERED INCLUDED IN THE PRICE BID FOR VARIOUS TRAILER MOUNTED DEVICES.
11. ALL TRAILER MOUNTED DEVICES SUCH AS ARROW PANELS AND PORTABLE CHANGEABLE MESSAGE SIGNS SHALL MEET THE REQUIREMENTS OF THE MANUAL FOR ASSESSING SAFETY HARDWARE (MASH).

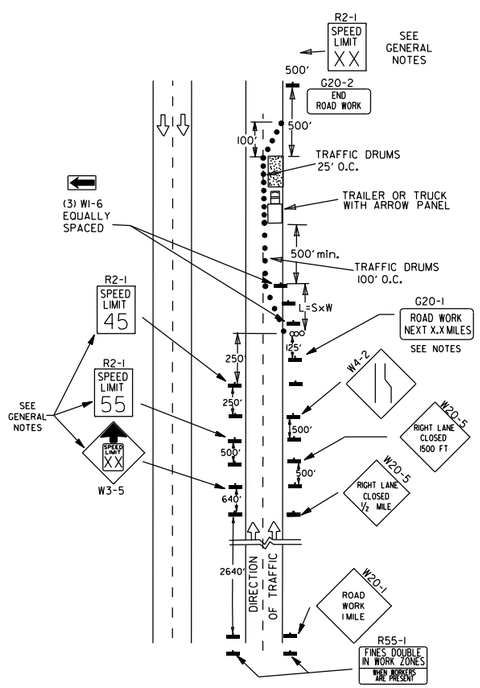

(C) TYPICAL APPLICATION - CONSTRUCTION OPERATIONS OF INTERMEDIATE TO LONG TERM DURATION ON A 4-LANE DIVIDED ROADWAY WHERE HALF OF THE ROADWAY IS CLOSED.

CHANNELIZING DEVICES

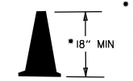

- WHEN CONES ARE USED ON FREEWAYS AND MULTI-LANE HIGHWAYS, THEY SHALL BE 28" MIN. DURING HOURS OF DARKNESS, 28" CONES SHALL BE USED ON ALL ROADWAYS, AND SHALL BE REFLECTORIZED IN ACCORDANCE WITH THE M.U.T.C.D.

CONES

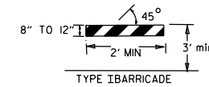

TYPE I BARRICADE

PLASTIC DRUM

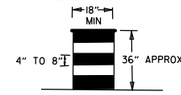

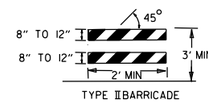

TYPE II BARRICADE

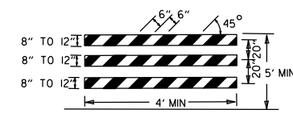

TYPE III BARRICADE

NOTE:
FOR ALL ROAD CLOSURES, THE TYPE III BARRICADES SHALL BE OF SUFFICIENT LENGTH TO EXTEND ACROSS ENTIRE ROADWAY.

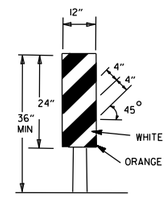

VERTICAL PANEL
VP-1R

VERTICAL PANEL PLACEMENT

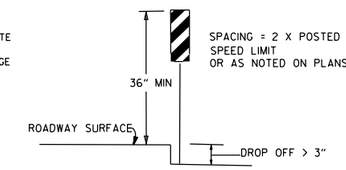

SPACING = 2 X POSTED SPEED LIMIT OR AS NOTED ON PLANS

FLAG

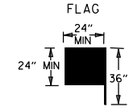

FLAG SHALL BE OF GOOD GRADE RED MATERIAL

TRAFFIC CONTROL DEVICES

NON-INTERSTATE			
VERTICAL DIFFERENTIAL	LOCATION	TRAFFIC CONTROL	
		≤ 45 MPH	> 45 MPH
≤ 1"	CENTERLINE	W8-11	W8-11
> 1" ≤ 3"	CENTERLINE	W8-11 AND CENTERLINE LANE STRIPING	W8-11 AND CENTERLINE LANE STRIPING
> 3"	CENTERLINE	STANDARD LANE CLOSURE(6)	STANDARD LANE CLOSURE(6)
≤ 3"	EDGE OF TRAVELED LANE OR EDGE OF SHOULDER	W8-9 AND TRAFFIC DRUMS(1)	W8-9 AND TRAFFIC DRUMS(1)
> 3" ≤ 6"	EDGE OF TRAVELED LANE OR EDGE OF SHOULDER	W8-17, EDGE LINE STRIPING, AND TRAFFIC DRUMS(1)	W8-17, EDGE LINE STRIPING, AND TRAFFIC DRUMS(1)
> 6" ≤ 18"	EDGE OF TRAVELED LANE OR EDGE OF SHOULDER	W8-17, EDGE LINE STRIPING, AND TRAFFIC DRUMS(1)	W8-17, EDGE LINE STRIPING, AND TRAFFIC DRUMS(2)
> 18" ≤ 24"	EDGE OF TRAVELED LANE OR EDGE OF SHOULDER	W8-17, EDGE LINE STRIPING, AND TRAFFIC DRUMS(1)	A STABILIZED WEDGE, W8-17, EDGE LINE STRIPING AND TRAFFIC DRUMS(3)
> 24"	EDGE OF TRAVELED LANE OR EDGE OF SHOULDER	PRECAST CONCRETE BARRIER(4) & EDGE LINES	PRECAST CONCRETE BARRIER(4) & EDGE LINES

INTERSTATE		
VERTICAL DIFFERENTIAL	LOCATION	TRAFFIC CONTROL
≤ 3"	CENTERLINE	W8-11 AND LANE STRIPING
≤ 3"	EDGE OF TRAVELED LANE OR EDGE OF SHOULDER	W8-9, EDGE LINE STRIPING, AND TRAFFIC DRUMS(2)
> 3" ≤ 6"	EDGE OF TRAVELED LANE OR EDGE OF SHOULDER	W8-17, EDGE LINE STRIPING, AND TRAFFIC DRUMS(2)
> 6"	EDGE OF TRAVELED LANE OR EDGE OF SHOULDER	PRECAST CONCRETE BARRIER & EDGE LINES

INTERSTATE AND NON-INTERSTATE		
FORESLOPE	HEIGHT	TRAFFIC CONTROL
1:1	> 2 FT	PRECAST CONCRETE BARRIER
2:1	≤ 5 FT	TRAFFIC DRUMS
2:1	> 5 FT	PRECAST CONCRETE BARRIER
Flatter than 2:1	N/A	TRAFFIC DRUMS

GENERAL NOTES:

1. WHEN THE SHOULDER AREA IS USED AS PART OF THE TRAVELED LANE AND THERE IS INSUFFICIENT WIDTH TO PLACE TRAFFIC DRUMS ON THE REMAINING SHOULDER WIDTH, THEN VERTICAL PANELS SHALL BE USED.
2. WHEN THERE IS INSUFFICIENT WIDTH TO PLACE TRAFFIC DRUMS ON THE REMAINING SHOULDER WIDTH, A STABILIZED WEDGE SHALL BE USED.
3. PRECAST CONCRETE BARRIER WALL CAN BE USED IN LIEU OF A STABILIZED WEDGE, W8-17 SIGN, EDGE LINE STRIPING, AND TRAFFIC DRUMS, IF AND WHERE DIRECTED BY THE ENGINEER.
4. A STABILIZED WEDGE, W8-17 SIGN, EDGE LINE STRIPING, AND TRAFFIC DRUMS CAN BE USED IN LIEU OF PRECAST CONCRETE BARRIER WALL, IF AND WHERE DIRECTED BY THE ENGINEER.
5. W21-5, W21-5a, AND/OR W21-5b SIGNS SHALL BE USED WHERE THE ROADWAY IS UNOBSTRUCTED IF AND WHERE DIRECTED BY THE ENGINEER.
6. TIME LIMITATIONS MUST CONFORM TO SECTION 603 OF THE STANDARD SPECIFICATIONS FOR HIGHWAY CONSTRUCTION (CURRENT EDITION).

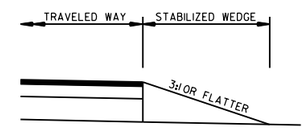

STABILIZED WEDGE

NOTE:
MATERIALS FOR THE STABILIZED WEDGE SHALL MEET THE REQUIREMENTS PROVIDED IN SECTION 603.02 OF THE STANDARD SPECIFICATIONS.

STOP SLOW PADDLE

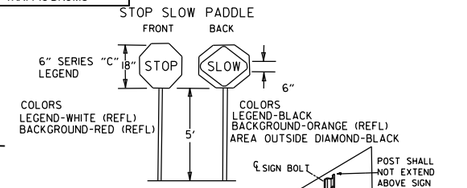

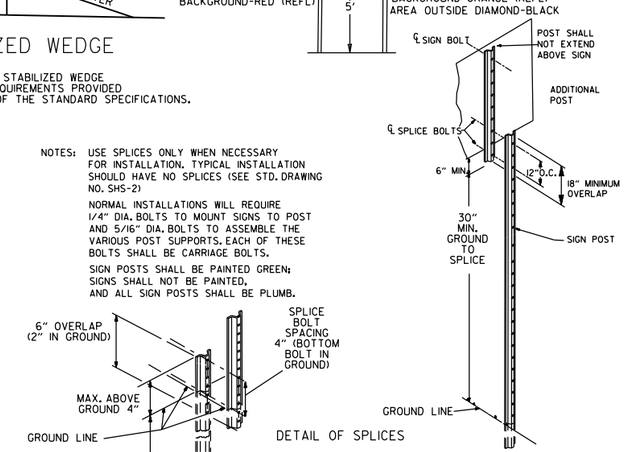

NOTES: USE SPLICES ONLY WHEN NECESSARY FOR INSTALLATION. TYPICAL INSTALLATION SHOULD HAVE NO SPLICES (SEE STD. DRAWING NO. SHS-21)

NORMAL INSTALLATIONS WILL REQUIRE 1/4" DIA. BOLTS TO MOUNT SIGNS TO POST AND 5/16" DIA. BOLTS TO ASSEMBLE THE VARIOUS POST SUPPORTS. EACH OF THESE BOLTS SHALL BE CARRIAGE BOLTS.

SIGN POSTS SHALL BE PAINTED GREEN; SIGNS SHALL NOT BE PAINTED, AND ALL SIGN POSTS SHALL BE PLUMB.

DETAIL OF SPLICES

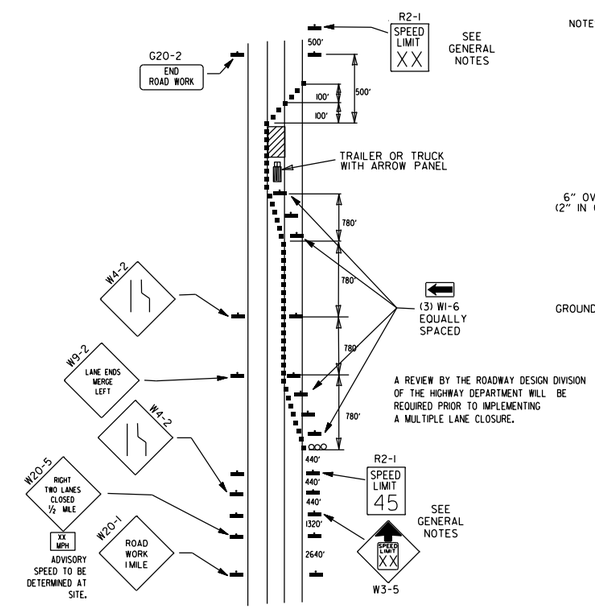

A REVIEW BY THE ROADWAY DESIGN DIVISION OF THE HIGHWAY DEPARTMENT WILL BE REQUIRED PRIOR TO IMPLEMENTING A MULTIPLE LANE CLOSURE.

(D) TYPICAL APPLICATION - CLOSING MULTIPLE LANES OF A MULTILANE HIGHWAY.

DATE	REVISION	FILMED
08-12-21	REVISED TRAFFIC CONTROL DEVICES AND NOTES	
05-20-21	REVISED NOTE 10	
2-27-20	REVISED TRAFFIC CONTROL DEVICES DETAILS	
11-07-19	REVISED NOTE 9, ADDED NOTE 11	
7-25-19	REVISED TRAFFIC CONTROL DEVICES DETAILS	
9-2-15	REVISED NOTE 2 & REPLACED R2-5A WITH W3-5	
10-15-09	ADDED REFERENCE TO MASH	
11-20-08	REVISED SIGN DESIGNATIONS	
11-18-04	ADDED NOTE	
10-1-98	ADDED NOTE	
4-03-97	ADDED (SP) TO W6-1& REVISED TRAFFIC CONTROL DEVICES NOTE	
10-18-96	ADDED R55-1	
10-12-95	MOVED UPPER SPLICE	
6-8-95	REVISED SPLICE DETAIL, TEXT	6-8-95
2-2-95	REVISED PER PART VI, MUTCD, SEPT. 3, 1993	
8-15-91	DRAWN AND PLACED IN USE	

ARKANSAS STATE HIGHWAY COMMISSION

STANDARD TRAFFIC CONTROLS FOR HIGHWAY CONSTRUCTION

STANDARD DRAWING TC-3

REINFORCING BAR TABLE PER BARRIER UNIT

MARK	LOCATION	BAR SIZE	(NO. BARS)	SKETCH
H-1	HORIZONTAL IN BARRIER TIED INSIDE V-1 BARS	#5	(6)	19'-3"
H-2	CENTERED ABOVE DRAIN SLOTS LONG. & TRANSVERSELY	#5	(6)	6'-6"
H-3	TIED ABOVE H-1 BARS TO SUPPORT H-2, TIED TO V-1	#4	(2)	1'-6"
S-1	OVER LIFT HOLES	#4	(2)	2'-5", 90°, 3 3/8" R, LIFTING HOLE
S-2	HORIZ. AROUND SLOTS BETWEEN V-1'S @ DRAIN SLOTS	#4	(2)	1 1/2" R, SLOTS, 7", 1'-6", 1" MIN. CLEAR TO BAR; 5'-1" BAR W/(4) 1 1/2" R BENDS & MIN. 1'-0" OVERLAP
V-1	VERTICAL IN BARRIER(3) EACH END & (2) AT EACH DRAIN SLOTS	#5	(16)	TOTAL LENGTH 4'-9"; 2 3/16" R, 12°, 1 1/2", 9", 2'-1 3/8", 4 3/8"

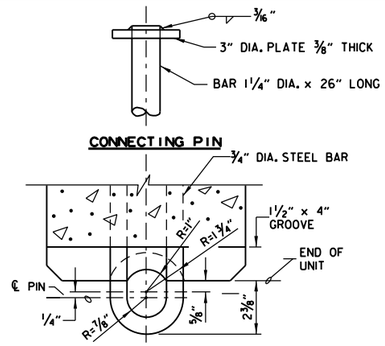

CONNECTION DETAILS

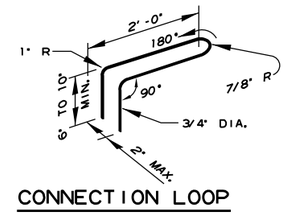

CONNECTION LOOP

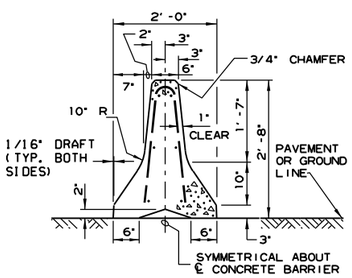

SECTION A-A

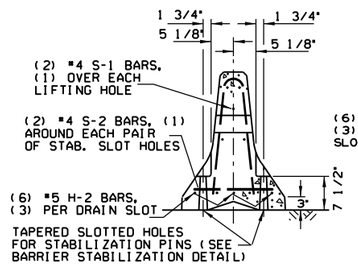

SECTION B-B

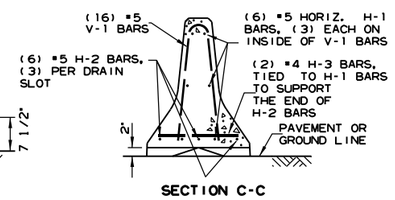

SECTION C-C

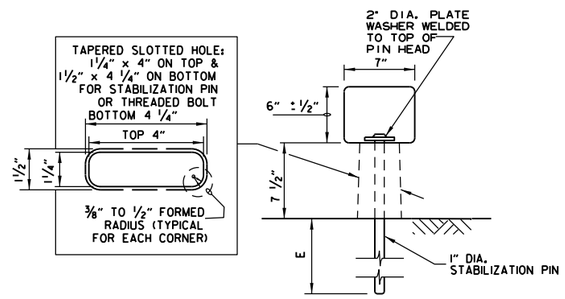

BARRIER STABILIZATION DETAIL

ROADWAY SECTION

(E) 4" - CONCRETE PAVEMENT
8" - ASPHALT PAVEMENT
12" - SHOULDER AREAS

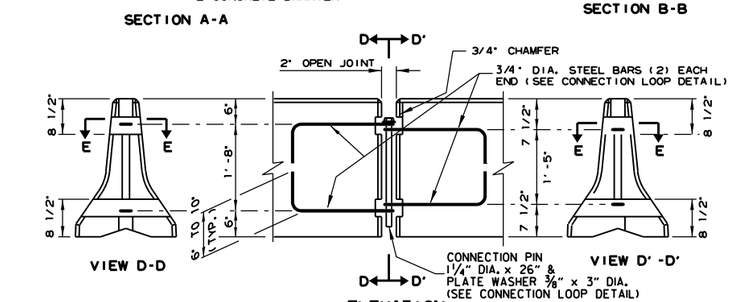

ELEVATION

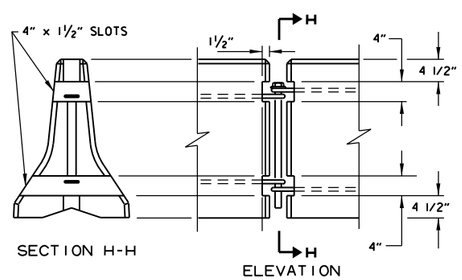

BARRIER REMOVAL SLOT DETAILS

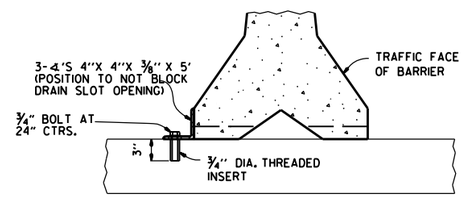

NOTE: " THREADED INSERTS SHALL BE CAST IN PLACE FOR ALL NEW BRIDGE DECKS AND DRILLED AND GROUTED FOR EXISTING BRIDGE DECKS. INSERTS SHALL HAVE A MINIMUM ULTIMATE LOAD CAPACITY OF 8000 LBS. IN TENSION. AFTER REMOVAL OF BARRIER, BOLTS, AND ANGLES, THE INSERTS SHALL BE FILLED WITH APPROVED NON-SHRINK EPOXY.

BARRIER STABILIZATION DETAIL

BRIDGE DECKS

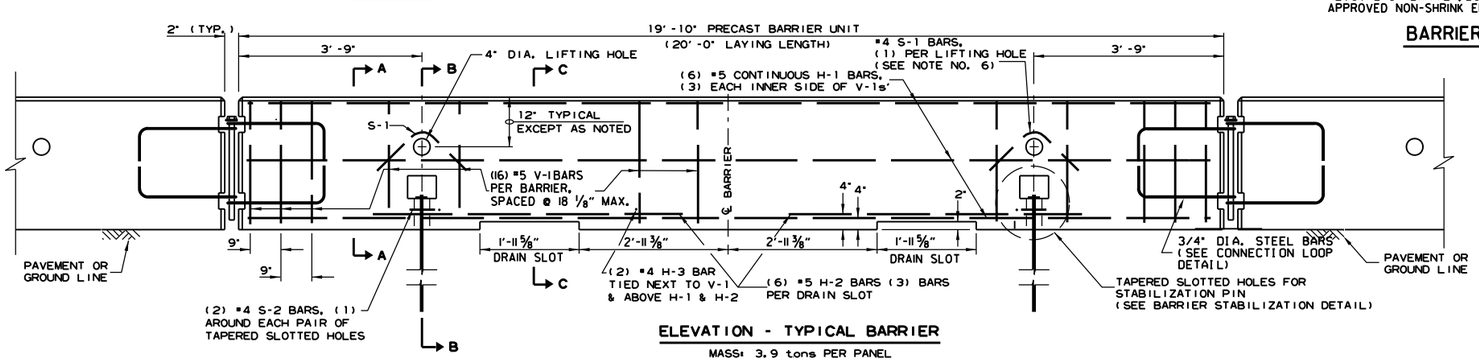

ELEVATION - TYPICAL BARRIER

MASS: 3.9 tons PER PANEL

GENERAL NOTES

1. THE CONTRACTOR SHALL FURNISH THE PRECAST CONCRETE BARRIER UNITS AND SHALL BE RESPONSIBLE FOR THE MANUFACTURE, SHIPMENT, STORAGE, PLACEMENT AND REMOVAL. AT THE COMPLETION OF THE PROJECT, THE PRECAST UNITS WILL REMAIN THE PROPERTY OF THE CONTRACTOR.

2. MATERIALS SHALL MEET THE FOLLOWING MINIMUM REQUIREMENTS:
   CONCRETE: 2500 PSI COMPRESSIVE STRENGTH AT 28 DAYS.
   REINFORCING STEEL: AASHTO M 31 OR M 53, GRADE 60
   STRUCTURAL STEEL: AASHTO-M270 GRADE 36 SHALL BE USED FOR THE CONNECTION PIN, CONNECTION LOOPS, AND STABILIZATION PINS. A ONE PIECE PIN WITH A 3" ROUNDED TOP MAY BE USED IN PLACE OF THE DETAILED CONNECTION PIN.
   DELINEATORS: DELINEATORS SHALL BE MOUNTED AT 10' SPACING ON TOP OF PRECAST BARRIER.

   IN APPLICATIONS WHERE BARRIER WALL IS WITHIN 6 FEET OF A TRAFFIC LANE, ADDITIONAL DELINEATORS SHALL BE PLACED ON THE BARRIER AT 10' SPACING APPROXIMATELY ONE (1) FOOT FROM THE TOP OF THE BARRIER. DELINEATORS SHALL BE ON THE ARDOT QUALIFIED PRODUCTS LIST FOR CONSTRUCTION CONCRETE BARRIER MARKERS.
   DELINEATOR COLOR SHALL BE IN ACCORDANCE WITH THE MANUAL ON UNIFORM TRAFFIC CONTROL DEVICES.
   PAYMENT FOR DELINEATORS SHALL BE CONSIDERED INCLUDED IN THE PRICE BID PER LIN. FT. FOR "FURNISHING AND INSTALLING PRECAST CONCRETE BARRIER". THE CONTRACTOR SHALL CERTIFY TO THE ENGINEER THAT THE MATERIAL AND THE DESIGN USED IN THE PRECAST BARRIER UNITS MEETS THE REQUIREMENTS AS SHOWN ON THIS STANDARD DRAWING.

3. OTHER PRECAST CONCRETE BARRIERS THAT HAVE BEEN CRASH TESTED AND APPROVED BY THE FEDERAL HIGHWAY ADMINISTRATION TO MEET THE REQUIREMENTS OF MANUAL FOR ASSESSING SAFETY HARDWARE (MASH) WILL BE ACCEPTED IN LIEU OF THE BARRIER SHOWN. DRAIN SLOTS SHALL BE PROVIDED AS NEEDED OR AS DIRECTED BY THE ENGINEER. THE CONTRACTOR SHALL FURNISH A CERTIFICATION OF MANUAL FOR ASSESSING SAFETY HARDWARE (MASH) COMPLIANCE FOR ANY OTHER TYPES OF PRECAST BARRIER TO BE USED. THE CERTIFICATION SHALL STATE THAT THE PRECAST CONCRETE BARRIER MEETS THE REQUIREMENTS OF MANUAL FOR ASSESSING SAFETY HARDWARE (MASH). MIXING OF SHAPES WILL NOT BE ALLOWED IN A CONTINUOUS LINE OF UNITS.

4. DOWEL HOLES IN PAVEMENT OR BRIDGE SLABS THAT ARE TO REMAIN IN PLACE SHALL BE FILLED. HOLES IN CONCRETE PAVEMENT AND BRIDGE SLABS SHALL BE FILLED WITH AN APPROVED NON-SHRINK EPOXY GROUT. HOLES IN ASPHALT PAVEMENT SHALL BE FILLED WITH AN APPROVED ASPHALT JOINT FILLER. PAYMENT FOR DRILLING AND FILLING HOLES TO BE INCLUDED IN THE PRICE FOR VARIOUS BARRIER ITEMS.

5. ATTACH UNITS TO ROADWAY SURFACE WITH STABILIZATION PINS AND TO DECK SLABS USING BOLTS WHEN REQUIRED.

6. A 4" WHITE PVC SLEEVE MAY BE USED TO FORM THE LIFTING HOLE AND IF USED THE SLEEVE IS TO BE LEFT IN PLACE.

DATE	REVISION	FILMED
11-07-19	REVISED NOTE 3	
2-27-14	REVISED BARRIER STABILIZATION DETAIL	
10-15-09	ADDED REFERENCE TO MASH	
8-5-09	REV. NOTE 3 CONCERNING DRAIN SLOTS	
11-29-07	REVISED NOTE 3	
5-25-06	DELETED GENERAL NOTE 7	
11-18-04	REVISED BARRIER STABILIZATION DETAIL BRIDGE DECKS	
4-10-03	REVISED GENERAL NOTE 2	
8-22-02	ISSUED NEW DRAWING	

ARKANSAS STATE HIGHWAY COMMISSION

STANDARD TRAFFIC CONTROLS FOR HIGHWAY CONSTRUCTION - TEMPORARY PRECAST BARRIER

STANDARD DRAWING TC-4

Ⓐ 4 feet or greater preferred. If less than 4 feet, Precast Units shall be connected to slab (SEE BARRIER STABILIZATION DETAIL-BRIDGE DECKS STD. DRWG. TC-4)

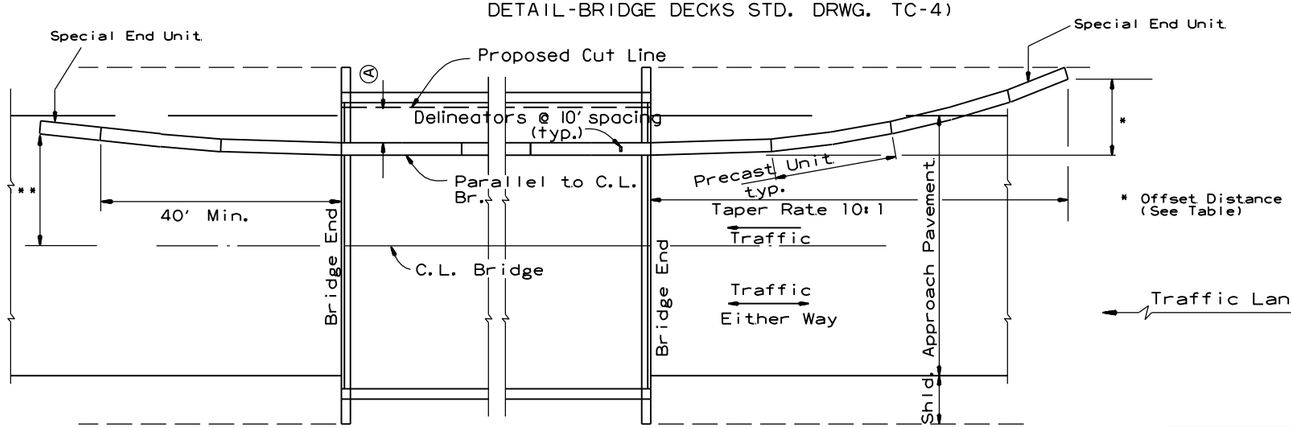

BARRIER PLACEMENT ALONG BRIDGE WITH OFFSET

No Scale

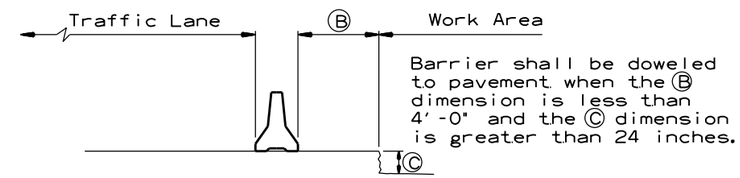

Barrier shall be doweled to pavement when the Ⓑ dimension is less than 4'-0" and the Ⓒ dimension is greater than 24 inches.

SECTION J-J

No Scale

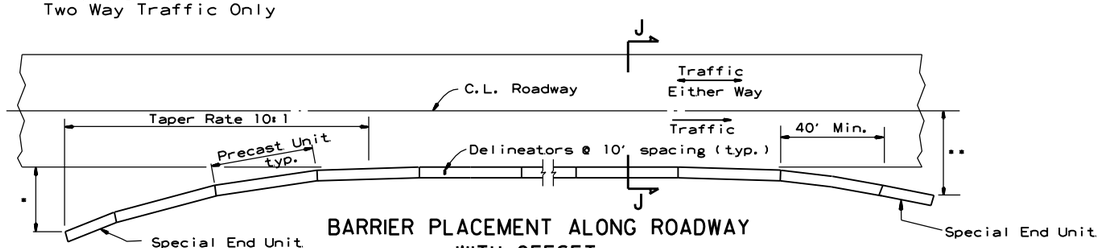

BARRIER PLACEMENT ALONG ROADWAY WITH OFFSET

No Scale

* Offset Distance (See Table)

** Offset Distance For Two Way Traffic Only

Offset Distance Table

Speed (MPH)	Offset Distance (FT.)
≤ 45	12
> 45	18

If offset distance is not attainable, then see "Barrier Placement With Attenuator" Detail shown below.

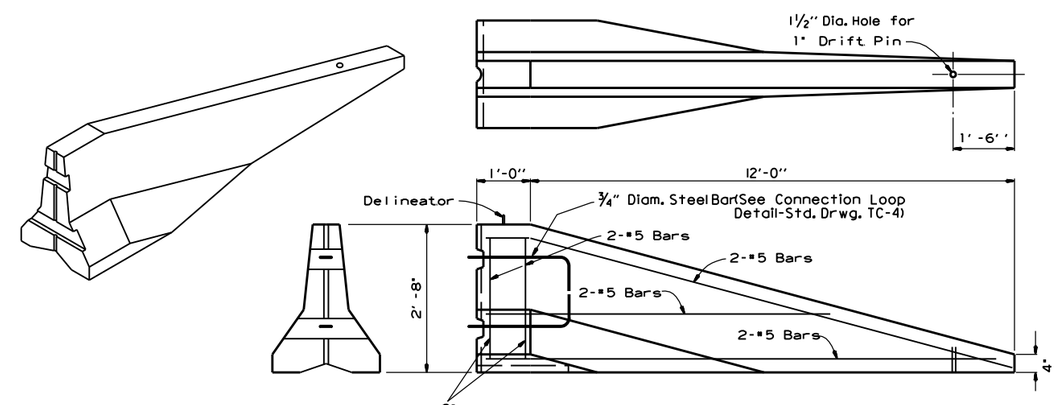

SPECIAL END UNIT

No Scale

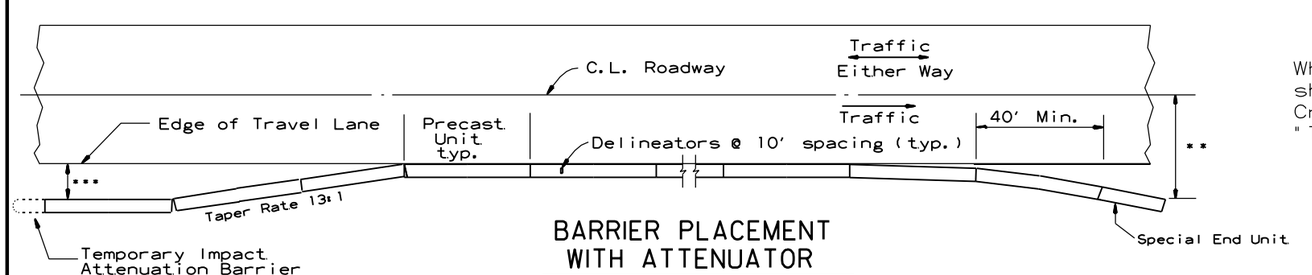

BARRIER PLACEMENT WITH ATTENUATOR

No Scale

*** Min. 3'-0" From Edge of Travel Lane to Nearest Edge of Attenuator

** Offset Distance For Two Way Traffic Only

General Notes

When shown on the Plans, the ends of the Temporary Precast Concrete Barrier shall be protected with a Manual For Assessing Safety Hardware (MASH) approved Crash Cushion. Payment for Crash Cushions shall be made under the item of "Temporary Impact Attenuation Barrier."

DATE	REVISION	FILMED
11-07-19	REVISED NOTE	
10-15-09	ADDED REFERENCE TO MASH	
5-25-06	REVISED BARRIER PLACEMENT	
8-22-02	ISSUED NEW DRAWING	

ARKANSAS STATE HIGHWAY COMMISSION

STANDARD TRAFFIC CONTROLS FOR HIGHWAY CONSTRUCTION - TEMPORARY PRECAST BARRIER

STANDARD DRAWING TC-5

GENERAL NOTES

INSTALL A MINIMUM OF 2 UPSLOPE STAKES AND 4 DOWNSLOPE STAKES AT AN ANGLE TO WEDGE WATTLE TO BOTTOM OF DITCH.

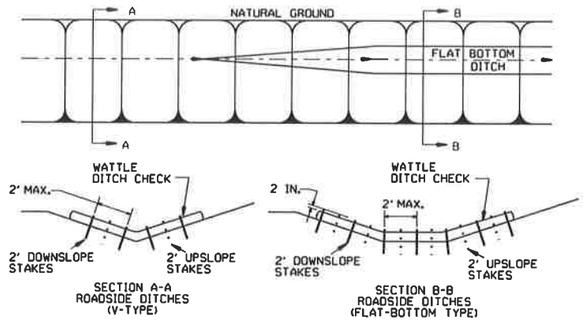

WATTLE DITCH CHECK (E-1)

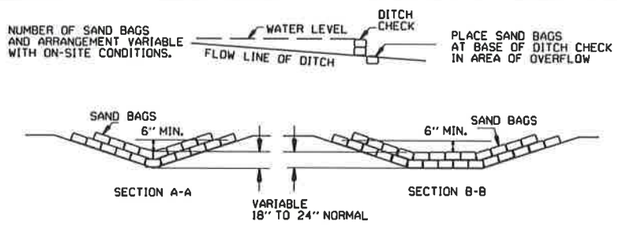

SAND BAG DITCH CHECK (E-5)

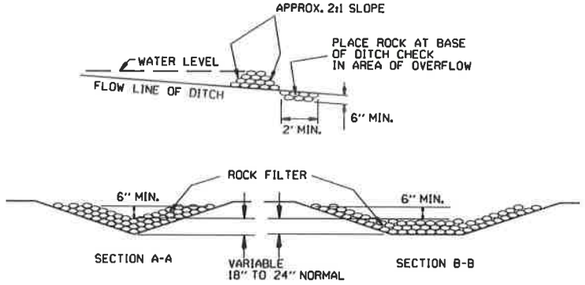

ROCK DITCH CHECK (E-6)

GENERAL NOTES

GEOTEXTILE FABRIC (TYPE 4) IN ACCORDANCE WITH SECTION 625

GEOTEXTILE FABRIC SHALL BE SPLICED TOGETHER WITH A SEWN SEAM ONLY AT A SUPPORT POST OR TWO SECTIONS OF FENCE MAY BE OVERLAPPED INSTEAD. PAYMENT OF ADDITIONAL MATERIAL FOR OVERLAP WILL NOT BE MADE.

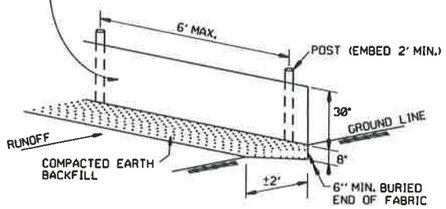

SILT FENCE (E-11)

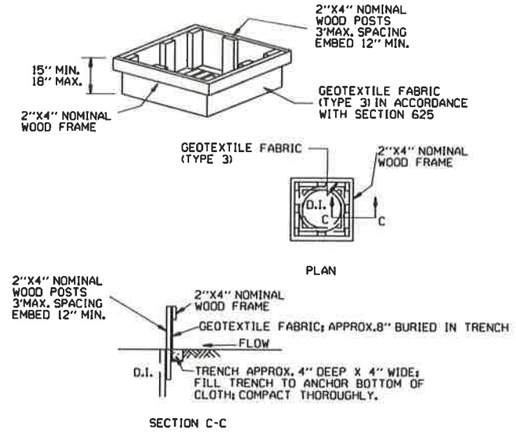

DROP INLET SILT FENCE (E-7)

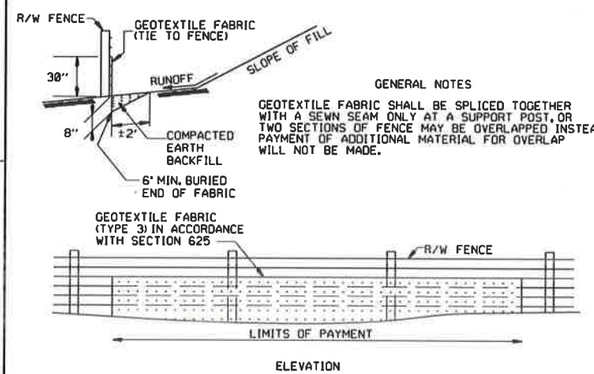

GENERAL NOTES

GEOTEXTILE FABRIC SHALL BE SPLICED TOGETHER WITH A SEWN SEAM ONLY AT A SUPPORT POST, OR TWO SECTIONS OF FENCE MAY BE OVERLAPPED INSTEAD. PAYMENT OF ADDITIONAL MATERIAL FOR OVERLAP WILL NOT BE MADE.

SILT FENCE ON R/W FENCE (E-4)

GENERAL NOTES

1. STRAW BALES SHALL BE INSTALLED SO THAT THE BINDINGS ARE ORIENTED AROUND THE SIDES RATHER THAN ALONG THE TOPS AND BOTTOMS OF THE BALES. THE BALES SHALL BE A MINIMUM OF 30 INCHES IN LENGTH.

2. NO GAPS SHALL BE LEFT BETWEEN BALES.

3. BALED STRAW FILTER BARRIERS COMPLETED AND ACCEPTED WILL BE MEASURED BY THE BALE IN PLACE AS AUTHORIZED BY THE ENGINEER AND WILL BE PAID FOR AT THE CONTRACT UNIT PRICE BID PER BALE FOR BALED STRAW DITCH CHECKS.

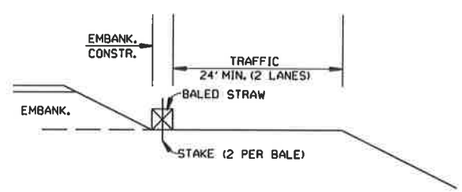

BALED STRAW FILTER BARRIER (E-2)

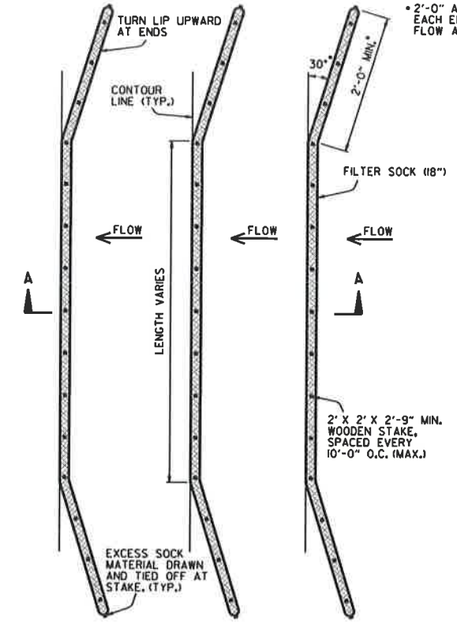

PLAN VIEW
N.T.S.

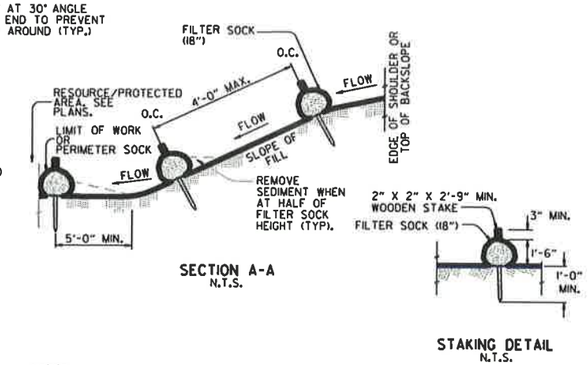

STAKING DETAIL
N.T.S.

NOTES:

1. FILTER SOCKS CAN BE PLACED AT THE TOP, ON THE FACE, AND AT THE TOE OF SLOPES AS SEDIMENT-TRAPPING DEVICES FOR SHEET FLOW RUNOFF.

2. FILTER SOCKS ARE TYPICALLY SUPPLIED AND INSTALLED WITH 18 INCH DIAMETERS. DIAMETER TOLERANCE IS 2 INCHES, AS FILTER SOCKS TEND TO FLATTEN OUT WHEN PLACED.

3. STEEL POSTS MAY BE USED AND SHALL BE ROLLED FROM HIGH CARBON STEEL AND HAVE A MINIMUM OF 1.25 LB./FT. POSTS SHALL BE HOT-DIPPED GALVANIZED OR PAINTED WITH HIGH-GRADE WEATHER RESISTANT BROWN OR BLACK STEEL PAINT. STEEL POSTS SHALL BE EQUIPPED WITH ANCHOR PLATE HAVING A MINIMUM AREA OF 14 SQUARE INCHES. POSTS SHALL BE STUDDED, EMBOSSED, OR PUNCHED. POSTS AND ANCHOR PLATES SHALL CONFORM TO THE REQUIREMENTS OF ASTM A702. NO ADDITIONAL PAYMENT WILL BE PROVIDED FOR STEEL POSTS, BUT PRICE WILL BE CONSIDERED SUBIDIARY TO "FILTER SOCK (18")."

4. FILTER SOCKS MAY BE UP TO 250 FEET LONG. WHEN USED ON LONG SLOPES, FILTER SOCKS MAY BE JOINTED OR STAGGERED AS SHOWN IN DETAILS.

5. INSPECT FILTER SOCKS AFTER EACH RUNOFF EVENT. REMOVE AND REPLACE IF SIGNS OF UNDERCUTTING OR DOWNSTREAM RILLS ARE OBSERVED.

FILTER SOCK ALONG SLOPE (E-3)

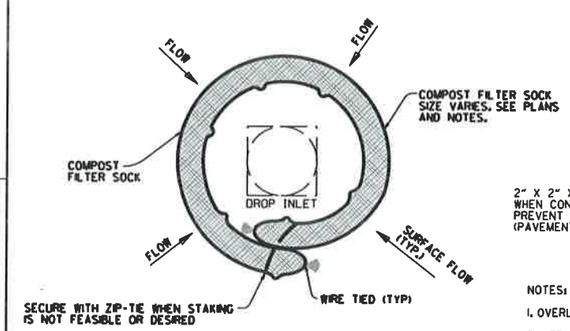

DROP INLET PLAN VIEW
N.T.S.

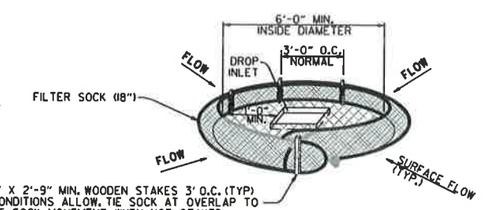

DROP INLET PERSPECTIVE VIEW
N.T.S.

NOTES:

1. OVERLAP ENDS OF SOCK (1' MIN. 3' MAX.).

2. USE 18" DIA. SOCK IN NON-TRAFFIC AREAS OR AREAS WHERE SAFETY IS NOT A CONCERN.

COMPOST FILTER SOCK DROP INLET PROTECTION (E-13)

DATE	REVISION	FILMED
11-16-17	ADDED FILTER SOCK E-3 AND E-13	
12-15-11	DELETED BALED STRAW DITCH CHECK & ADDED WATTLE DITCH CHECK	
11-18-98	ADDED NOTES	
07-02-98	ADDED BALED STRAW FILTER BARRIER (E-2)	
07-20-95	REVISED SILT FENCE E-4 AND E-11	7-20-95
07-15-94	REV. E-4 & E-11 MIN. 13" BURIED END OF FABRIC	
06-02-94	REVISED E-1,4,7 & 11; DELETED E-2 & 3	6-2-94
04-01-93	REDRAWN	
10-01-92	REDRAWN	
08-02-76	ISSUED R.D.M.	298-7-28-76

ARKANSAS STATE HIGHWAY COMMISSION

TEMPORARY EROSION CONTROL DEVICES

STANDARD DRAWING TEC-1

CLEARING AND GRUBBING

CONSTRUCTION SEQUENCE

1. PLACE PERIMETER CONTROLS (I.E. SILT FENCES , DIVERSION DITCHES, SEDIMENT BASINS, ETC.)
2. PERFORM CLEARING AND GRUBBING OPERATION.

EXCAVATION

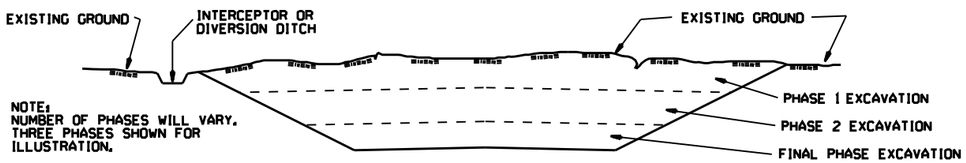

GENERAL NOTE

ALL CUT SLOPES SHALL BE DRESSED, PREPARED, SEEDED, AND MULCHED AS THE WORK PROGRESSES. SLOPES SHALL BE EXCAVATED AND STABILIZED IN EQUAL INCREMENTS NOT TO EXCEED 25 FEET, MEASURED VERTICALLY.

CONSTRUCTION SEQUENCE

1. EXCAVATE AND STABILIZE INTERCEPTOR AND/OR DIVERSION DITCHES.
2. PERFORM PHASE 1 EXCAVATION. PLACE PERMANENT OR TEMPORARY SEEDING.
3. PERFORM PHASE 2 EXCAVATION. PLACE PERMANENT OR TEMPORARY SEEDING.
4. PERFORM FINAL PHASE OF EXCAVATION. PLACE PERMANENT OR TEMPORARY SEEDING. STABILIZE DITCHES. CONSTRUCT DITCH CHECKS, DIVERSION DITCHES, SEDIMENT BASINS, OR OTHER EROSION CONTROL DEVICES AS REQUIRED.

EMBANKMENT

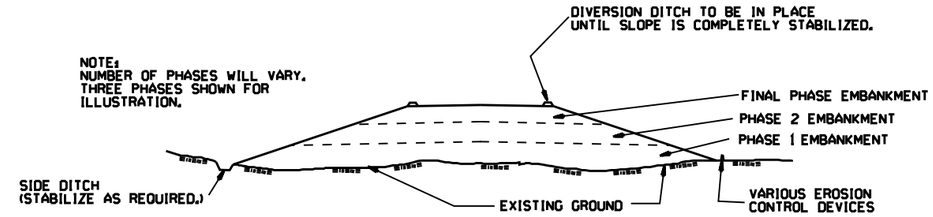

GENERAL NOTE

ALL EMBANKMENT SLOPES SHALL BE DRESSED, PREPARED, SEEDED, AND MULCHED AS THE WORK PROGRESSES. SLOPES SHALL BE CONSTRUCTED AND STABILIZED IN EQUAL INCREMENTS NOT TO EXCEED 25 FEET, MEASURED VERTICALLY.

CONSTRUCTION SEQUENCE

1. CONSTRUCT DIVERSION DITCHES, DITCH CHECKS, SEDIMENT BASINS, SILT FENCES, OR OTHER EROSION CONTROL DEVICES AS SPECIFIED.
2. PLACE PHASE 1 EMBANKMENT WITH PERMANENT OR TEMPORARY SEEDING. PROVIDE DIVERSION DITCHES AND SLOPE DRAINS IF EMBANKMENT CONSTRUCTION IS TO BE TEMPORARILY ABANDONED FOR A PERIOD OF GREATER THAN 21 DAYS.
3. PLACE PHASE 2 EMBANKMENT WITH PERMANENT OR TEMPORARY SEEDING. PROVIDE DIVERSION DITCHES AND SLOPE DRAINS IF EMBANKMENT CONSTRUCTION IS TO BE TEMPORARILY ABANDONED FOR A PERIOD OF GREATER THAN 21 DAYS.
4. PLACE FINAL PHASE OF EMBANKMENT WITH PERMANENT OR TEMPORARY SEEDING. PLACE DIVERSION DITCHES AND SLOPE DRAINS AND MAINTAIN UNTIL ENTIRE SLOPE IS STABILIZED.

DATE	REVISION	FILMED
11-03-94	CORRECTED SPELLING	
6-2-94	Drawn & Issued	6-2-94

ARKANSAS STATE HIGHWAY COMMISSION

TEMPORARY EROSION CONTROL DEVICES

STANDARD DRAWING TEC-3

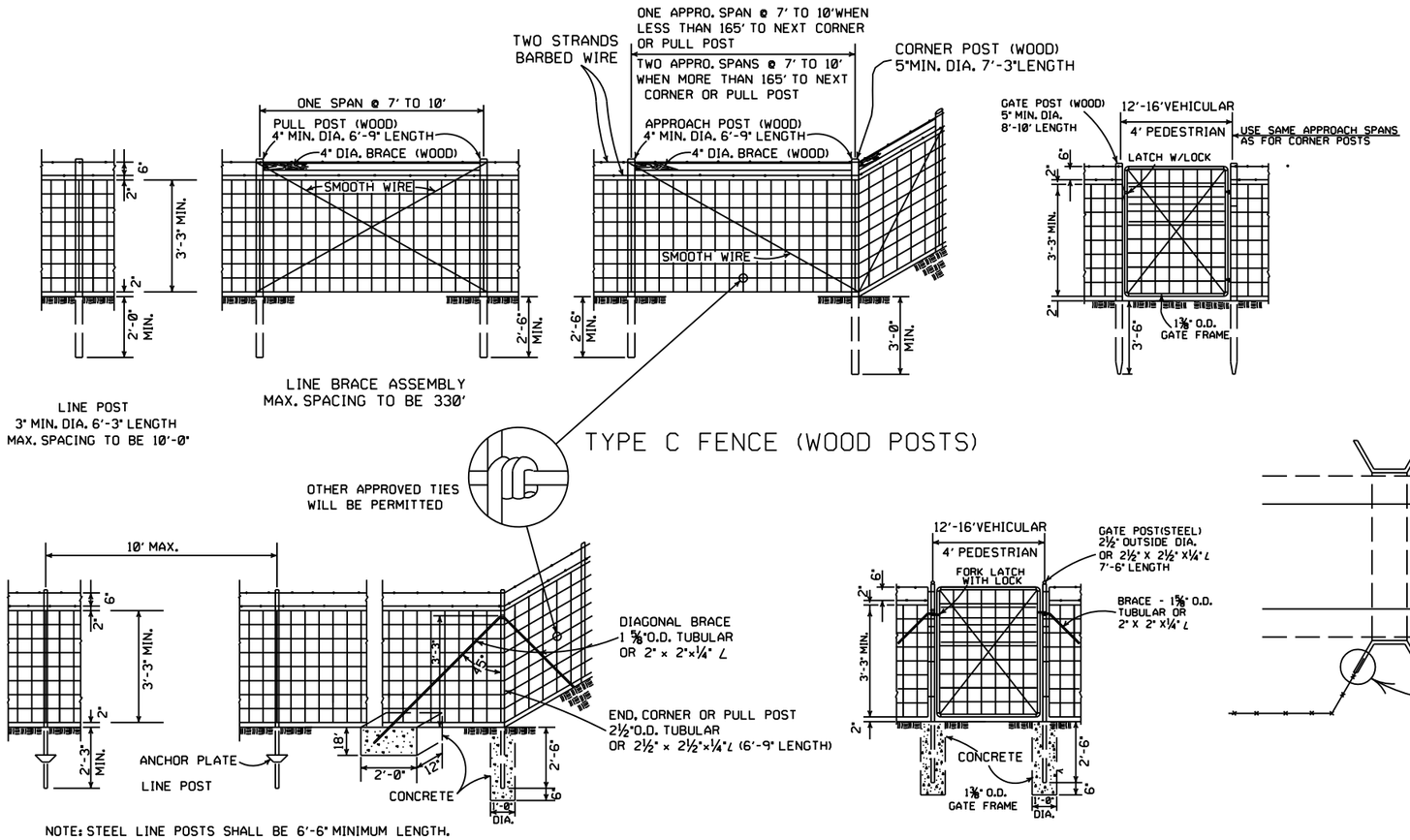

TYPE C FENCE (WOOD POSTS)

TYPE C FENCE (STEEL POSTS)

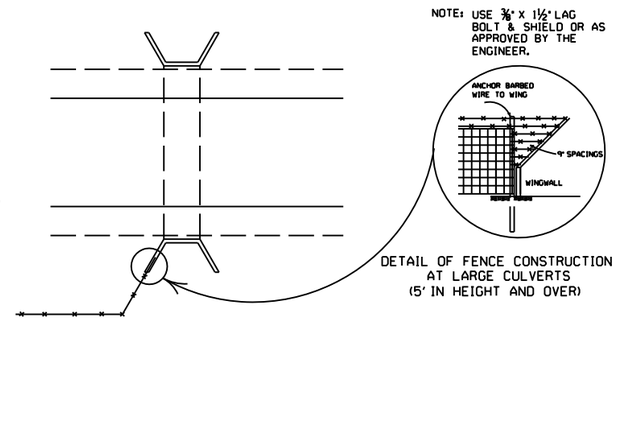

GENERAL NOTES:

STEEL LINE POSTS SHALL BE PAINTED OR GALVANIZED.
TUBULAR END, CORNER, PULL, OR DIAGONAL BRACES MUST CONFORM TO THE DIMENSIONS AND WEIGHTS SPECIFIED ON STANDARD DRAWING WF-3 (CHAIN LINK). APPROVED ALTERNATES ARE ACCEPTABLE.
AN ACCEPTABLE TOLERANCE IN LENGTH OF TUBULAR OR WOODEN POSTS SHALL BE - 1" TO +2".
TUBULAR POSTS MUST BE PAINTED OR GALVANIZED.

THE CONTRACTOR SHALL FURNISH AT LEAST 25% OF TIMBER LINE POSTS OF 7 FOOT LENGTHS IN ORDER TO PROVIDE SUFFICIENT SET IN SOFT GROUND OR SMALL DEPRESSIONS.

DRIVEWAY GATES, EITHER SINGLE 12' TO 16' OR DOUBLE 6' TO 8' OPENING OF THE SAME TYPE AS THE PEDESTRIAN GATE, SHALL BE INSTALLED ON THE RIGHT SIDE OF EACH THROUGH LANE ROAD AT LARGE CULVERTS OR BRIDGE CROSS FENCE, FOR USE OF MAINTENANCE EQUIPMENT. LOCATION OF GATES TO BE SHOWN ON PLANS OR AS DESIGNATED BY THE ENGINEER.

AT STREAM CROSSINGS, THE FENCE SHALL NOT BE CONSTRUCTED ACROSS LARGE STREAMS. WHERE CLEARANCE IS SUFFICIENT FROM THE TOP OF THE BANK TO THE BRIDGE STRUCTURE A CROSS CONNECTION SHALL BE CONSTRUCTED BETWEEN THE FENCE ON EACH SIDE OF THE ROAD. WHERE THE CLEARANCE IS NOT SUFFICIENT, THE FENCE SHALL BE TERMINATED WITH CROSS CONNECTIONS AND END POSTS ADJACENT TO BRIDGE ABUTMENTS OR CULVERT WINGWALLS.

SPLICE FOR BARBED WIRE BETWEEN PULL POST ASSEMBLY SHALL BE BY THE "EYE METHOD" AS DESCRIBED AS FOLLOWS:
THE ENDS OF THE BARBED WIRE SHALL BE BENT TO FORM A LOOP. THE LOOPS SHALL BE CONNECTED. AFTER THE LOOPS ARE CONNECTED THE ENDS OF THE WIRE SHALL BE WRAPPED AROUND THE PROJECTING WIRES A MINIMUM OF 4 TIMES FOR EACH WIRE LOOP.

SPLICE FOR WOVEN WIRE BETWEEN PULL POST SHALL BE BY THE "WESTERN UNION METHOD" AS DESCRIBED AS FOLLOWS: THE VERTICAL WIRES FOR EACH END OF THE FENCE FABRIC SHALL BE PLACED SIDE BY SIDE AND THE PROJECTING HORIZONTAL WIRES SHALL BE WRAPPED A MINIMUM OF 4 TIMES AROUND THE HORIZONTAL WIRES OF THE FIRST WEB.

STAPLE AT LEAST TOP, BOTTOM AND ALTERNATE WIRES OF WOVEN FABRIC FOR WOOD LINE POSTS.

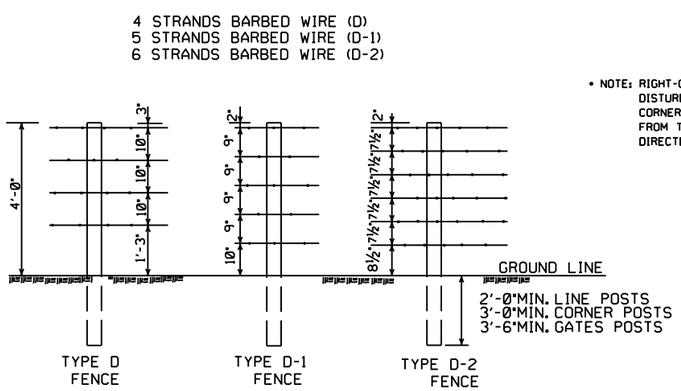

NOTE: SPACING AND SIZE (EXCEPT LENGTH) OF POSTS, APPROACH SPANS, PULL POST ASSEMBLIES, AND CORNER BRACING FOR TYPE D FENCE SHALL CONFORM TO TYPE C FENCE. USE GALVANIZED STAPLES ON WOOD POSTS AND APPROVED FASTENERS ON STEEL POSTS.

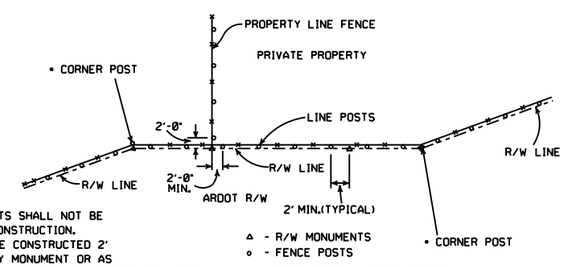

• NOTE: RIGHT-OF-WAY MONUMENTS SHALL NOT BE DISTURBED BY FENCE CONSTRUCTION. CORNER POSTS SHALL BE CONSTRUCTED 2' FROM THE RIGHT-OF-WAY MONUMENT OR AS DIRECTED BY THE ENGINEER.

RIGHT-OF-WAY FENCE LOCATION

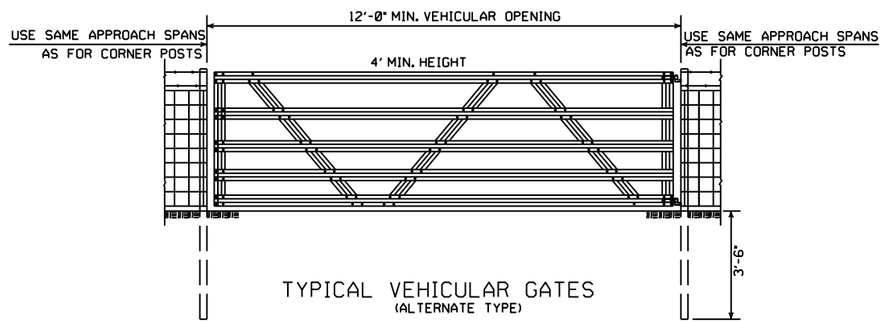

TYPICAL VEHICULAR GATES
(ALTERNATE TYPE)

OTHER STYLE VEHICULAR GATES MAY BE USED WITH THE APPROVAL OF THE ENGINEER.
THE METHOD OF SECURING GATE (LATCH AND/OR LOCK) SHALL MEET THE APPROVAL OF THE ENGINEER.

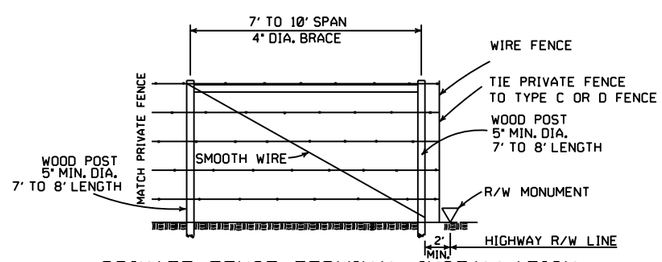

PRIVATE FENCE TERMINAL INSTALLATION
WHERE EXISTING FENCE CONSISTS OF STEEL POSTS, USE END POST ASSEMBLY AS SHOWN IN TYPE C FENCE OR OTHER END POST ASSEMBLY AS APPROVED BY THE ENGINEER.

DATE	REVISION	FILMED
8-22-02	REVISED GENERAL NOTES	
10-18-96	REVISED AASHTO	
11-22-95	REVISED R-O-W LOCATION DETAIL	
6-2-94	REVISED BARB WIRE AND ADDED CORNER POST NOTES	6-2-94
8-5-93	REVISED R/W INSTALLATION FENCE	8-5-93
10-1-92	ADDED STAPLE NOTE	10-1-92
8-15-91	ADDED TYPE D-2 FENCE	8-15-91
11-30-89	DELETED CLASS CONCRETE	11-30-89
7-15-88	ADDED SPLICE NOTE	700-7-15-88
10-30-87	GENERAL REVISIONS	549-10-30-87
11-1-84	MAX. POST SPACING MIN. WIRE GAUGE	507-11-1-84
1-4-83	MIN. DIA. LINE POST	648-1-4-83
3-2-81	TOLERANCE FOR POST LENGTH	722-3-2-81
12-1-72	ADDED D-1 & FENCE INSTALLATION	564-12-1-72
10-2-72	REVISED AND REDRAWN	540-10-2-72

ARKANSAS STATE HIGHWAY COMMISSION

WIRE FENCE TYPE C AND D

STANDARD DRAWING WF-4