MISSOURI HIGHWAYS AND TRANSPORTATION COMMISSION
PLANS FOR PROPOSED
STATE HIGHWAY
MCDONALD COUNTY- T21N R31W SEC 9, 10, 15, 16

DESIGN DESIGNATION

A.A.D.T. - 2024 = 707
A.A.D.T. - 2044 = 782
D.H.V. = 12.15%
T = 11.76%
V = 45 M.P.H.
D = 60%
FUNCTIONAL CLASSIFICATION- RURAL MAJOR COLLECTOR

NO RIGHT OF WAY TO BE ACQUIRED

CONVENTIONAL SYMBOLS
(USED IN PLANS)

	EXISTING	NEW
BUILDINGS AND STRUCTURES		
GUARD RAIL		
GUARD CABLE		
CONCRETE RIGHT-OF-WAY MARKER		
STEEL RIGHT-OF-WAY MARKER		
LOCATION SURVEY MARKER		
UTILITIES		
FIBER OPTICS	-FO-	~~FO~~
OVERHEAD CABLE TV	-OTV-	~~OTV~~
UNDERGROUND CABLE TV	-UTV-	~~UTV~~
OVERHEAD TELEPHONE	-OT-	~~OT~~
UNDERGROUND TELEPHONE	-UT-	~~UT~~
OVERHEAD POWER	-OE-	~~OE~~
UNDERGROUND POWER	-UE-	~~UE~~
SANITARY SEWER	-S-	~~S~~
STORM SEWER	-SS-	~~SS~~
GAS	-G-	~~G~~
WATER	-W-	~~W~~
MANHOLE	SAN	
FIRE HYDRANT	HYD	
WATER VALVE	WV	
WATER METER	WM	
DROP INLET	D	
DITCH BLOCK		
GROUND MOUNTED SIGN	SIGN	
LIGHT POLE		
H-FRAME POWER POLE		
TELEPHONE PEDESTAL	PED	
FENCE		
CHAIN LINK	-V-	
WOVEN WIRE	-X-	
GATE POST		
BENCHMARK	BM	
REMOVE	R	
REMOVE & RELOCATE BY OTHERS	R&RBO	
REMOVE BY OTHERS	RBO	
REMOVE AND REPLACE	R&R	
REMOVE AND RELOCATE	R&RELOC	
USE IN PLACE	UIP	
ADJUST TO GRADE	ATG	
ADJUST TO GRADE BY OTHERS	ATGBO	
NO DIRECT PAY	NDP	
DO NOT DISTURB	DND	

NOTE: DASHED OR OPEN SYMBOLS INDICATE EXISTING FEATURES

NOT TO SCALE

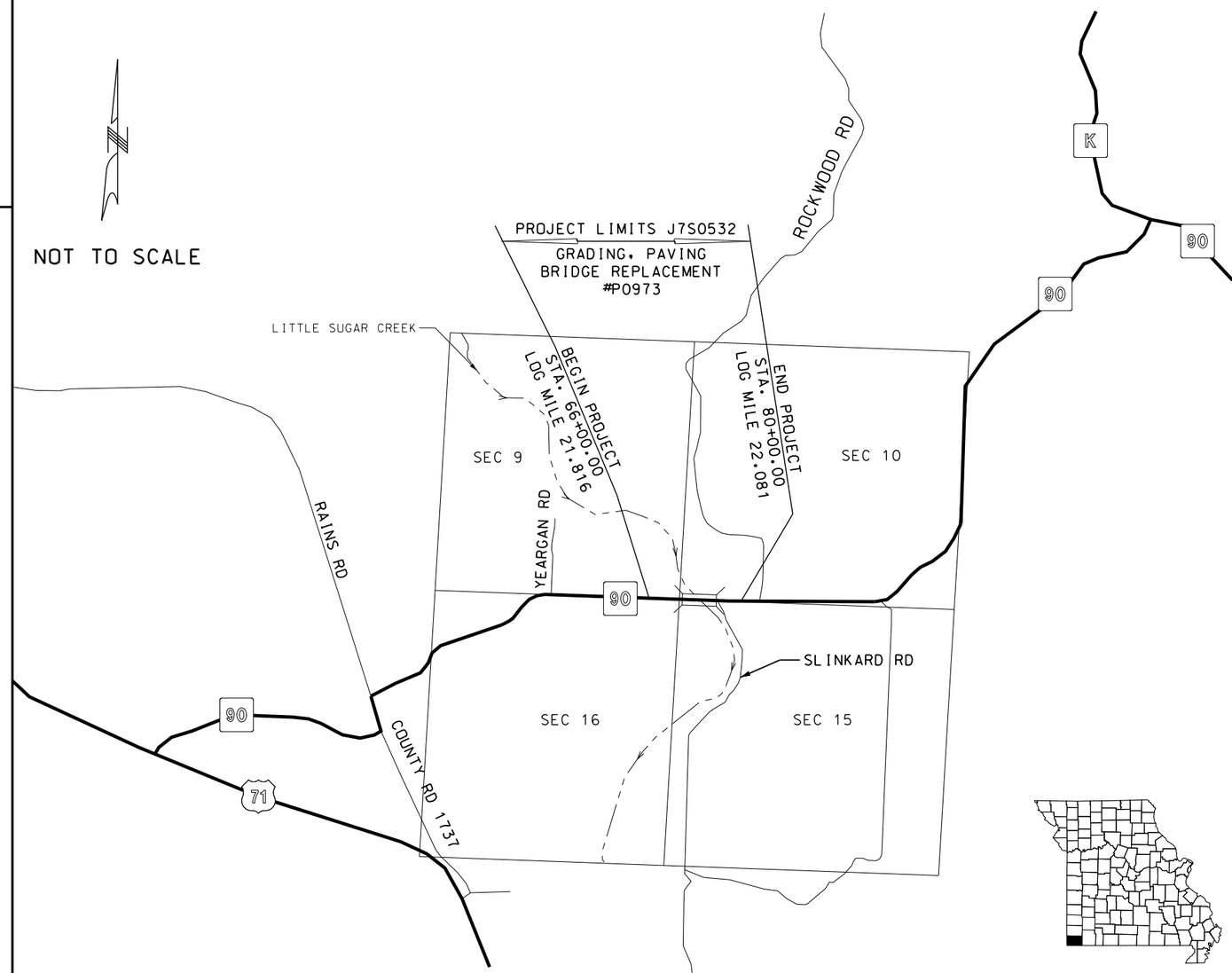

THE EXISTENCE AND APPROXIMATE LOCATION OF UTILITY FACILITIES KNOWN TO EXIST, AS SHOWN ON THE PLANS, ARE BASED ON THE BEST INFORMATION AVAILABLE TO THE COMMISSION AT THIS TIME. THIS INFORMATION IS PROVIDED BY THE COMMISSION "AS-IS" AND THE COMMISSION EXPRESSLY DISCLAIMS ANY REPRESENTATION OR WARRANTY AS TO THE COMPLETENESS, ACCURACY, OR SUITABILITY OF THE INFORMATION FOR ANY USE. RELIANCE UPON THIS INFORMATION IS DONE AT THE RISK AND PERIL OF THE USER, AND THE COMMISSION SHALL NOT BE LIABLE FOR ANY DAMAGES THAT MAY ARISE FROM ANY ERROR IN THE INFORMATION. IT IS, THEREFORE, THE RESPONSIBILITY OF THE CONTRACTOR TO VERIFY THE EXISTENCE, LOCATION AND STATUS OF ANY FACILITY. SUCH VERIFICATION INCLUDES DIRECT CONTACT WITH THE LISTED UTILITIES.

INDEX OF SHEETS

LENGTH OF PROJECT

BEGINNING OF PROJECT	STA.	66 + 00.00	
END OF PROJECT	STA.	80 + 00.00	
APPARENT LENGTH		1400.00	FEET
EQUATIONS AND EXCEPTIONS:		NONE	
TOTAL CORRECTIONS		0.00	FEET
NET LENGTH OF PROJECT		1400.00	FEET
STATE LENGTH		0.265	MILES
FOR INFORMATION ONLY ESTIMATED DISTURBED ACRES		0.50	ACRES

STATE OF MISSOURI
PAUL JOSEPH KRONLAGE
NUMBER EN 023328
REGISTERED PROFESSIONAL ENGINEER

05/20/2024 5:52:36 AM
Paul J. Kronlage - Civil
MO PE - 023328

DATE PREPARED	
5/19/2024	
ROUTE 90	STATE MO
DISTRICT SW	SHEET NO. 1
COUNTY MCDONALD	
JOB NO. J7S0532	
CONTRACT ID.	
PROJECT NO.	
BRIDGE NO.	

DATE	DESCRIPTION

IF A SEAL IS PRESENT ON THIS SHEET IT HAS BEEN ELECTRONICALLY SEALED AND DATED.

MISSOURI HIGHWAYS AND TRANSPORTATION COMMISSION
105 WEST CAPITOL
JEFFERSON CITY, MO 65102
1-888-ASK-MODOT (1-888-275-6636)

EFK•Moen
Civil Engineering Design
13523 Barrett Parkway Dr
Suite 250
St Louis, MO 63021
Phone 314-394-3100
Fax 314-394-3199
Missouri Certificate of Authority: 001578

REV.

(1) BRIDGE EXCEPTION FOR BRIDGE APPROACH SLAB FROM STA. 70+68 TO STA. 70+87 AND STA. 74+59 TO STA. 74+77
(2) SEE STANDARD PLANS 401.00C FOR DETAILS
(3) FULL DEPTH SAWCUT AT EXISTING EDGE OF PAVEMENT

ASPHALT OPTION CONCRETE OPTION

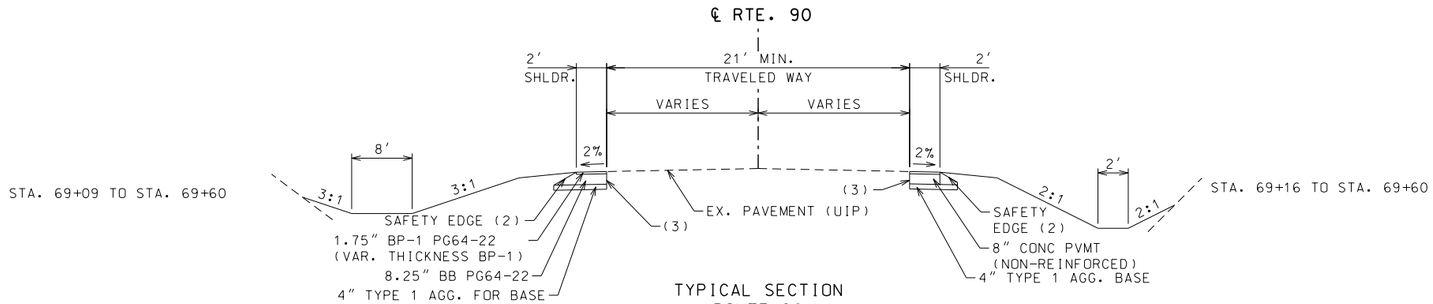

TYPICAL SECTION
ROUTE 90
WIDENING, OPTIONAL PAVEMENT
STA. 69+09 TO STA. 69+60

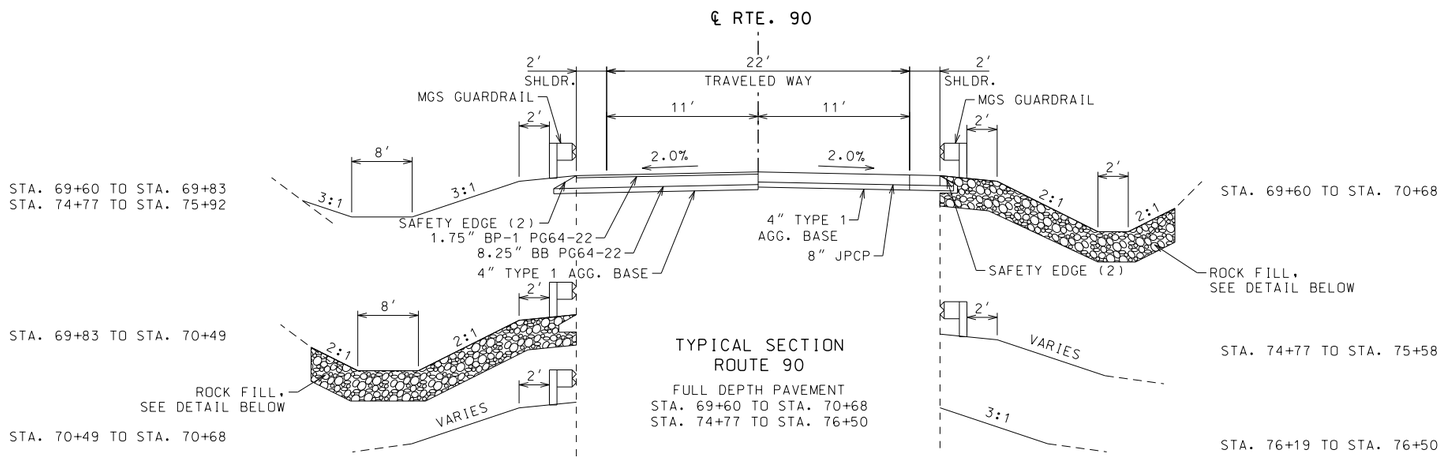

TYPICAL SECTION
ROUTE 90
FULL DEPTH PAVEMENT
STA. 69+60 TO STA. 70+68
STA. 74+77 TO STA. 76+50

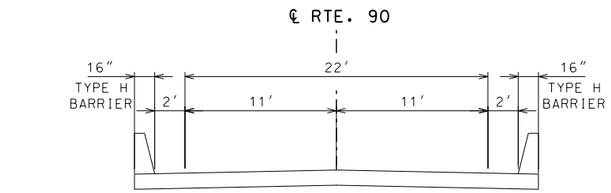

TYPICAL SECTION
BRIDGE A9230
STA. 70+86.88 TO STA. 74+58.71

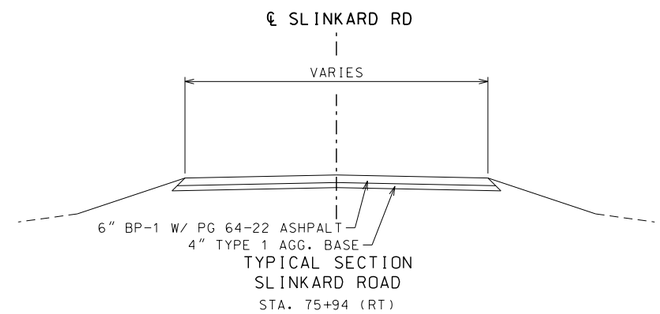

TYPICAL SECTION
SLINKARD ROAD
STA. 75+94 (RT)

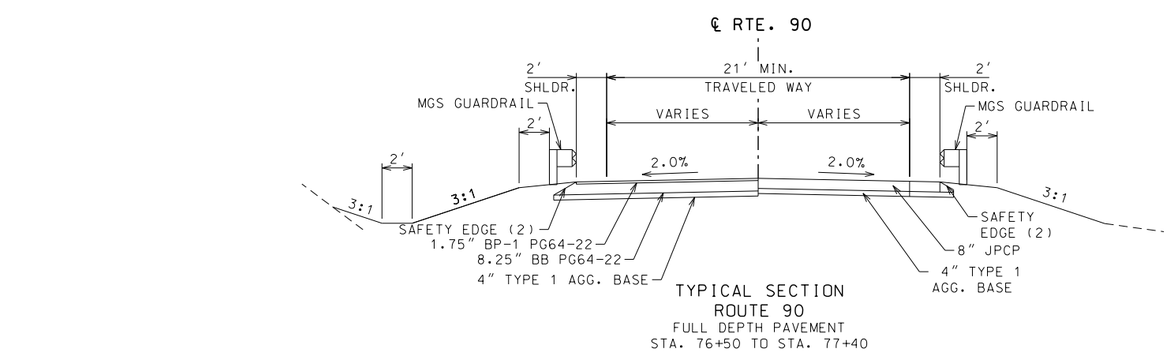

TYPICAL SECTION
ROUTE 90
FULL DEPTH PAVEMENT
STA. 76+50 TO STA. 77+40

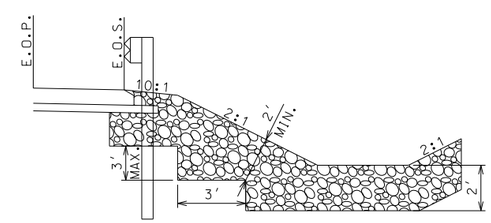

ROCK FILL BENCHING DETAIL
ROUTE 90 - RT
STA. 70+01.28 TO STA. 70+50.00

NOT TO SCALE

TYPICAL SECTION
SHEET 1 OF 1

STATE OF MISSOURI
PAUL JOSEPH KRONLAGE
NUMBER
EN 023328
REGISTERED PROFESSIONAL ENGINEER

05/20/2024 5:52:57 AM
Paul J. Kronlage - Civil
MO PE - 023328

DATE PREPARED	
5/19/2024	
ROUTE 90	STATE MO
DISTRICT SW	SHEET NO. 2
COUNTY MCDONALD	
JOB NO. J7S0532	
CONTRACT ID.	
PROJECT NO.	
BRIDGE NO.	

DATE	DESCRIPTION

IF A SEAL IS PRESENT ON THIS SHEET IT HAS BEEN ELECTRONICALLY SEALED AND DATED.

MISSOURI HIGHWAYS AND TRANSPORTATION COMMISSION
105 WEST CAPITOL
JEFFERSON CITY, MO 65102
1-888-ASK-MODOT (1-888-275-6636)

EFK•Moen
Civil Engineering Design
13523 Barrett Parkway Dr
Suite 250
St. Louis, MO 63021
Phone 314-394-3100
Fax 314-394-3199
Missouri Certificate of Authority: 001578

REV.

DISCLAIMER
THE PROFESSIONAL WHOSE SIGNATURE AND PERSONAL SEAL APPEAR HEREON ASSUMES RESPONSIBILITY ONLY FOR WHAT APPEARS ON THIS PAGE, AND DISCLAIMS (PURSUANT TO SECTION 327.411 RSMO) SPECIFICATION, ESTIMATES, REPORTS, OR OTHER DOCUMENTS OR INSTRUMENTS NOT SEALED BY THE UNDERSIGNED PROFESSIONAL RELATING TO OR INTENDED TO BE USED FOR ANY PART OR PARTS OF THE PROJECT TO WHICH THIS PAGE REFERS.

REMOVAL OF IMPROVEMENTS

SHEET NO.	STA	STA	LOC	ROADWAY	L.F.	S.F.	EACH	DESCRIPTIONS
4	69+09	69+60	LT&RT	ROUTE 90		211.4		PAVEMENT REMOVAL
4	69+60		LT&RT	ROUTE 90	25.9			FULL DEPTH SAWCUT
4	69+60	70+88	LT&RT	ROUTE 90		3300.7		PAVEMENT REMOVAL
4	70+80		LT	ROUTE 90			1	SIGN, POST, & FOUNDATION: OBJECT MARKER
4	70+80		RT	ROUTE 90			2	2 SIGNS, POSTS & FOUNDATIONS: CREEK SIGN & OBJECT MARKER
5	74+59		LT	ROUTE 90			2	2 SIGNS, POSTS & FOUNDATIONS: CREEK SIGN & OBJECT MARKER
5	74+59		RT	ROUTE 90			1	SIGN, POST, & FOUNDATION: OBJECT MARKER
5	74+58	77+40	LT&RT	ROUTE 90		7394.7		PAVEMENT REMOVAL
5	75+52	76+20	RT	ROUTE 90	68.5			12 INCH PIPE
5	75+94	76+32	LT	ROUTE 90	38.0			18 INCH PIPE
5	77+40		LT&RT	ROUTE 90	24.7			FULL DEPTH SAWCUT
13			RT	ROUTE 90			2	SIGNS, POST, & FOUNDATION: "ONE LANE BRIDGE" & "1 MILE"
13			RT	ROUTE 90			1	SIGN, POST, & FOUDATION: BRIDGE WEIGHT LIMIT SIGN
13	68+28		RT	ROUTE 90			2	SIGNS, POST, & FOUNDATION: "YEILD" & "TO ONCOMING TRAFFIC"
13	79+60		LT	ROUTE 90			2	SIGNS, POST, & FOUNDATION: "YEILD" & "TO ONCOMING TRAFFIC"
13			LT	ROUTE 90			1	SIGN, POST, & FOUDATION: BRIDGE WEIGHT LIMIT SIGN
13			LT	ROUTE 90			2	SIGNS, POST, & FOUNDATION: "ONE LANE BRIDGE" & "1/2 MILES"
				PAY TOTAL	1 LUMP SUM			

MOBILIZATION	1 LUMP SUM
ADDITIONAL MOBILIZATION FOR SEEDING	2 EACH
CONTRACTOR FURNISHED SURVEYING AND STAKING	1 LUMP SUM
SEEDING - COOL SEASON MIXTURES	0.5 ACRE
TEMPORARY SEEDING	0.5 ACRE
MULCHING	1 ACRE

TYPE 1 AGGREGATE BASE

SHEET NO.	ROADWAY	STA	STA	LOC	AREA	TYPE 1 AGG. FOR BASE 4 INCH THICK	REMARKS
					S.F.	S.Y.	
4	ROUTE 90	69+09.26	69+60.00	LT	101.5	11.3	WIDENING
4	ROUTE 90	69+16.04	69+60.00	RT	88.0	9.8	WIDENING
4	ROUTE 90	69+60.00	70+68.53	LT&RT	2805.1	311.7	
5	ROUTE 90	74+77.06	77+40.00	LT&RT	6793.6	754.8	
5	ROUTE 90	75+94.00		RT	880.4	97.8	SLINKARD ROAD
					SUBTOTAL	1185.4	
					PAY TOTAL	1185	

ENTRANCE PIPES

SHEET NO.	ROADWAY	STA	STA	GROUP C 12" PIPE	GROUP C 18" PIPE	BEVELED PIPE END TREATMENT FOR 12"	BEVELED PIPE END TREATMENT FOR 18"	REMARKS
				L.F.	L.F.	EACH	EACH	
5	ROUTE 90	75+72	76+14	33.5		2		
5	ROUTE 90	75+95	76+36		28.8		2	
		SUBTOTAL		33.5	28.8	2	2	
		PAY TOTAL		34	29	2	2	

OPTIONAL PAVEMENT 10 INCH ASPHALT OR 8 INCH PCCP

SHEET NO.	ROADWAY	STA	STA	LOC	AREA	OPTIONAL PAVEMENT	REMARKS
					S.F.	S.Y.	
4	ROUTE 90	69+09.26	69+60.00	LT	101.5	11.3	
4	ROUTE 90	69+16.04	69+60.00	RT	88.0	9.8	
4	ROUTE 90	69+60.00	70+68.53	LT&RT	2805.1	311.7	
5	ROUTE 90	74+77.06	77+40.00	LT&RT	6793.6	754.8	
					SUBTOTAL	1087.6	
					PAY TOTAL	1087.6	

PERMANENT PAVEMENT MARKING

SHEET NO.	ROADWAY	STA	STA	LOC	4" YELLOW WATERBORNE PAVEMENT MARKING TYPE P BEADS	4" WHITE WATERBORNE PAVEMENT MARKING TYPE P BEADS	8" WHITE PAVEMENT MARKING REMOVAL	REMARKS
					L.F.	L.F.	L.F.	
4	ROUTE 90	68+00	69+60	CL			320	
4 - 5	ROUTE 90	68+00	79+60	CL	2320			DOUBLE SOLID YELLOW
4 - 5	ROUTE 90	68+00	79+60	LT		1160		
4 - 5	ROUTE 90	68+00	79+60	RT		1160		
5	ROUTE 90	77+40	79+60	LT&RT			440	
				SUBTOTAL	2320	2320	760	
				PAY TOTAL	2320	2320	760	

GRAVEL (A) OR CRUSHED STONE (B)

SHEET NO.	ROADWAY	STA	STA	LOC	AREA	GRAVEL (A) OR CRUSHED STONE (B)	REMARKS
					S.F.	TON	
5	ROUTE 90	76+13		LT	445.3	13.2	
					SUBTOTAL	13.2	
					PAY TOTAL	13.2	

*ASSUMED 1.6 TONS/CY

ASPHALT ENTRANCE

SHEET NO.	ROADWAY	STA	STA	LOC	AREA	BP-1 PG 64-22	REMARKS
					S.F.	TON	
5	ROUTE 90	75+94		RT	880.4	31.8	SLINKARD ROAD
					SUBTOTAL	31.8	
					PAY TOTAL	31.8	

*ASSUMED 1.948 TONS/CY

QUANTITY SHEET
SHEET 1 OF 3

STATE OF MISSOURI
PAUL JOSEPH KRONLAGE
NUMBER EN 023328
REGISTERED PROFESSIONAL ENGINEER

05/20/2024 5:54:37 AM
Paul J. Kronlage - Civil
MO PE - 023328

DATE PREPARED	
5/19/2024	
ROUTE 90	STATE MO
DISTRICT SW	SHEET NO. 3
COUNTY MCDONALD	
JOB NO. J7S0532	
CONTRACT ID.	
PROJECT NO.	
BRIDGE NO.	

DATE	DESCRIPTION

IF A SEAL IS PRESENT ON THIS SHEET IT HAS BEEN ELECTRONICALLY SEALED AND DATED.

MISSOURI HIGHWAYS AND TRANSPORTATION COMMISSION
105 WEST CAPITOL
JEFFERSON CITY, MO 65102
1-888-ASK-MODOT (1-888-275-6636)

EFK•Moen
Civil Engineering Design
13523 Barrett Parkway Dr
Suite 250
St. Louis, MO 63021
Phone 314-394-3100
Fax 314-394-3199
Missouri Certificate of Authority: 001578

REV.

DISCLAIMER
THE PROFESSIONAL WHOSE SIGNATURE AND PERSONAL SEAL APPEAR HEREON ASSUMES RESPONSIBILITY ONLY FOR WHAT APPEARS ON THIS PAGE, AND DISCLAIMS (PURSUANT TO SECTION 327.411 RSMO) SPECIFICATION, ESTIMATES, REPORTS, OR OTHER DOCUMENTS OR INSTRUMENTS NOT SEALED BY THE UNDERSIGNED PROFESSIONAL RELATING TO OR INTENDED TO BE USED FOR ANY PART OR PARTS OF THE PROJECT TO WHICH THIS PAGE REFERS.

EROSION CONTROL

SHEET NO.	ROADWAY	STA	STA	LOC	SILT FENCE	SEDIMENT TRAP ROCK	SEDIMENT TRAP EXCAVATION	ROCK DITCH CHECK	TYPE C BERM	SEDIMENT REMOVAL	REMARKS
					L.F.	C.Y.	C.Y.	L.F.	L.F.	C.Y.	
11	ROUTE 90	69+04	70+25	LT	127	4.4	3.3	76		9	
11	ROUTE 90	69+27	70+98	RT	179	4.4	3.3	75		11	
11	ROUTE 90	70+26	70+95	LT&RT					265		
11	ROUTE 90	73+85	75+11	LT&RT					236		
11	ROUTE 90	74+15	75+92	LT	182	4.4	3.3	95		11	
11	ROUTE 90	75+11	75+79	RT	72	4.4	3.3	45		8	
11	ROUTE 90	76+11	77+50	RT	138			36		3	
11	ROUTE 90	76+27	77+00	LT	73			30		3	
				SUBTOTAL	771	17.6	13.2	357	501	45	
			PAY TOTAL		771	17.6	13.2	357	501	45	

EARTHWORK

XS SHEET NO	ROADWAY	LOC.	UNCLASSIFIED EXCAVATION	FILL	COMPACTING EMBANKMENT	EMBANKMENT IN PLACE	COMPACTING IN CUT	REMARKS
			C.Y.	C.Y.	C.Y.	C.Y.	STA.	
1-3	ROUTE 90	LT&RT	230	368	184	184		WEST SIDE OF BRIDGE
3-8	ROUTE 90	LT&RT	328	765	262	503		EAST SIDE OF BRIDGE
1-3	ROUTE 90	LT&RT					1.6	
4-8	ROUTE 90	LT&RT					2.6	
		SUBTOTAL	558	1133	446	687	4.2	
		PAY TOTAL	558		446	687	4.2	

NOTE: ASSUMING 20% SHRINKAGE

ROCK BLANKET, 2'-0" THICK

SHEET NO.	ROADWAY	STA	STA	LOC	FURNISHING TYPE 2 ROCK BLANKET	PLACING TYPE 2 ROCK BLANKET	SUBSURFACE DRAINAGE GEOTEXTILE	REMARKS
					C.Y.	C.Y.	S.Y.	
4	ROUTE 90	69+83	71+51	LT & RT	778.0	778.0	1305.0	
5	ROUTE 90	73+94	75+00	LT & RT	319.1	319.1	568.5	
				SUBTOTAL	1097.1	1097.1	1873.5	
				PAY TOTAL	1098	1098	(1)	

(1) SEE PAY TOTAL IN "ROCK FILL" TABLE

GUARDRAIL

SHEET NO.	ROADWAY	STA	STA	LOC	MGS BRIDGE APPROACH TRANSITION SECTION (REGULAR/NO CURB)	MGS GUARDRAIL 6-FT POST 6 FT. - 3 IN. SPACING	TYPE A CRASHWORTHY END TERMINAL (MASH)	MGS END ANCHOR	REMARKS
					EA.	L.F.	EA.	EA.	
4	ROUTE 90	69+79	70+54	LT	1	37.5	1		
4	ROUTE 90	69+79	70+54	RT	1	37.5	1		
5	ROUTE 90	74+92	75+81	LT	1	37.5	1		
5	ROUTE 90	74+92	75+69	RT	1	89.8		1	
				SUBTOTAL	4	202.3	3	1	
				PAY TOTAL	4	202	3	1	

ROCK FILL

SHEET NO.	ROADWAY	STA	STA	LOC	FURNISHING ROCK FILL	PLACING ROCK FILL	SUBSURFACE DRAINAGE GEOTEXTILE	REMARKS
					C.Y.	C.Y.	S.Y.	
4	ROUTE 90	69+44	70+50	RT	378.0	378.0	410.5	
				SUBTOTAL	378.0	378.0	410.5	
				ROCK BLANKET SUBTOTAL	-	-	1873.5	
				PAY TOTALS	378	378	2284	

LINEAR GRADING

SHEET NO.	ROADWAY	STA	STA	LOC	LINEAR GRADING CLASS 1	REMARKS
					STA	
5	ROUTE 90	75+94		RT	0.2	SLINKARD ROAD
5	ROUTE 90	76+13		LT	0.2	GRAVEL ENTRANCE
				SUBTOTAL	0.4	
				PAY TOTAL	0.4	

QUANTITY SHEET
SHEET 2 OF 3

STATE OF MISSOURI
PAUL JOSEPH KRONLAGE
NUMBER EN 023328
REGISTERED PROFESSIONAL ENGINEER

05/20/2024 5:54:57 AM
Paul J. Kronlage - Civil
MO PE - 023328

DATE PREPARED: 5/19/2024
ROUTE: 90 | STATE: MO
DISTRICT: SW | SHEET NO. 3
COUNTY: MCDONALD
JOB NO. J7S0532
CONTRACT ID.
PROJECT NO.
BRIDGE NO.

DATE	DESCRIPTION

IF A SEAL IS PRESENT ON THIS SHEET IT HAS BEEN ELECTRONICALLY SEALED AND DATED.

MISSOURI HIGHWAYS AND TRANSPORTATION COMMISSION
105 WEST CAPITOL
JEFFERSON CITY, MO 65102
1-888-ASK-MODOT (1-888-275-6636)

EFK•Moen
Civil Engineering Design
13523 Barrett Parkway Dr
Suite 250
St. Louis, MO 63021
Phone 314-394-3100
Fax 314-394-3199
Missouri Certificate of Authority: 001578

REV.

EFFECTIVE: 07-01-2024

SIGN	SIZE IN.	AREA SQ.FT.	QTY EACH	TOTAL AREA SQ.FT.	QTY RELOC EACH	TOTAL RELOC SQ.FT.	SIGN NUM.	DESCRIPTION
WARNING SIGNS								
W01-1L	48X48	16.00						TURN (SYMBOL LEFT ARROW)
W01-1R	48X48	16.00						TURN (SYMBOL RIGHT ARROW)
W01-2L	48X48	16.00						CURVE (SYMBOL LEFT ARROW)
W01-2R	48X48	16.00						CURVE (SYMBOL RIGHT ARROW)
W01-3L	48X48	16.00						REVERSE TURN (SYMBOL LEFT ARROW)
W01-3R	48X48	16.00						REVERSE TURN (SYMBOL RIGHT ARROW)
W01-4L	48X48	16.00						REVERSE CURVE (SYMBOL LEFT ARROW)
W01-4R	48X48	16.00						REVERSE CURVE (SYMBOL RIGHT ARROW)
W01-4bL	48X48	16.00						DOUBLE ARROW REVERSE CURVE (SYMBOL LT ARROWS)
W01-4bR	48X48	16.00						DOUBLE ARROW REVERSE CURVE (SYMBOL RT ARROWS)
W01-4cL	48X48	16.00						TRIPLE ARROW REVERSE CURVE (SYMBOL LT ARROWS)
W01-4cR	48X48	16.00						TRIPLE ARROW REVERSE CURVE (SYMBOL RT ARROWS)
W01-6	60X30	12.50						HORIZONTAL ARROW (SYMBOL)
W01-6a	72X36	18.00						HORIZ. ARROW (SYMBOL ON PERMANENT BARRICADE)
W01-7	60X30	12.50						DOUBLE HEAD HORIZONTAL ARROW (SYMBOL)
W01-7a	72X36	18.00						DOUBLE HEAD HORIZ. ARROW (SYMBOL ON PERM. BARR.)
W01-8	18X24	3.00						CHEVRON (SYMBOL)
W01-8a	30X36	7.50						CHEVRON (SYMBOL FOR DIVIDED HIGHWAYS)
W03-1	48X48	16.00						STOP AHEAD (SYMBOL)
W03-2	48X48	16.00						YIELD AHEAD (SYMBOL)
W03-3	48X48	16.00						SIGNAL AHEAD (SYMBOL)
W03-4	48X48	16.00						BE PREPARED TO STOP
W03-5	48X48	16.00						SPEED LIMIT AHEAD
W04-1L	48X48	16.00						MERGE (SYMBOL FROM LEFT)
W04-1R	48X48	16.00						MERGE (SYMBOL FROM RIGHT)
W04-1aL	48X48	16.00						MERGE (ARROW SYMBOL)
W04-1aR	48X48	16.00						MERGE (ARROW SYMBOL)
W05-1	48X48	16.00						ROAD/BRIDGE/RAMP NARROWS
W05-3	48X48	16.00						ONE LANE BRIDGE
W05-5	48X48	16.00						NARROW LANES
W06-1	48X48	16.00						DIVIDED HIGHWAY (SYMBOL)
W06-2	48X48	16.00						DIVIDED HIGHWAY END (SYMBOL)
W06-3	48X48	16.00						TWO WAY TRAFFIC (SYMBOL)
W07-3a	30X24	5.00						NEXT XX MILES (PLAQUE)
W08-1	48X48	16.00						BUMP
W08-2	48X48	16.00						DIP
W08-3	48X48	16.00						PAVEMENT ENDS
W08-4	48X48	16.00						SOFT SHOULDER
W08-5	48X48	16.00						SLIPPERY WHEN WET (SYMBOL)
W08-6	48X48	16.00						TRUCK CROSSING (WITH FLAGS)
W08-6c	48X48	16.00						TRUCK ENTRANCE
W08-7	36X36	9.00						LOOSE GRAVEL
W08-7a	36X36	9.00						FRESH OIL/LOOSE GRAVEL
W08-9	48X48	16.00						LOW SHOULDER
W08-11	48X48	16.00						UNEVEN LANES
W08-12	48X48	16.00						NO CENTER LINE
W08-15	48X48	16.00						GROOVED PAVEMENT
W08-15P	30X24	5.00						MOTORCYCLE (PLAQUE)
W08-17L	48X48	16.00						SHOULDER DROP-OFF (SYMBOL LEFT)
W08-17R	48X48	16.00						SHOULDER DROP-OFF (SYMBOL RIGHT)
W08-17P	30X24	5.00						SHOULDER DROP-OFF (PLAQUE)
W10-1	42RND.	9.62						RAILROAD CROSSING
W012-1	24X24	4.00						DOUBLE DOWN ARROW (SYMBOL)
W012-2	48X48	16.00						LOW CLEARANCE (SYMBOL)
W012-2X	24X18	3.00						LOW CLEARANCE (PLAQUE)
W012-2a	84X24	14.00						OVERHEAD LOW CLEARANCE (FEET AND INCHES)
W012-4	120X60	50.00						LOW CLEARANCE XX FT XX IN XX MILES AHEAD
W012-5	120X60	50.00						WIDTH RESTRICTION XX FT XX IN XX MILES AHEAD
W013-1	30X30	6.25						ADVISORY SPEED (PLAQUE)
W016-2	30X24	5.00						XXX FEET (PLAQUE)
W016-3	30X24	5.00						X MILE (PLAQUE)
W020-1	**48X48**	**16.00**	**2**	**32**			**2**	**ROAD/BRIDGE/RAMP WORK AHEAD**
W020-2	48X48	16.00						DETOUR AHEAD
W020-3	**48X48**	**16.00**	**2**	**32**			**20**	**ROAD CLOSED AHEAD**
W020-3	**48X48**	**16.00**	**2**	**32**			**20A**	**ROAD CLOSED 350 FT**
W020-5	**48X48**	**16.00**	**2**	**32**			**7**	**RIGHT/CENTER/LEFT LANE CLOSED AHEAD**
W020-5a	48X48	16.00						2 RIGHT/CENTER/LEFT LANES CLOSED AHEAD
W020-6a	48X48	16.00						RIGHT/CENTER/LEFT LANE CLOSED
W020-7a	**48X48**	**16.00**	**2**	**32**			**8**	**FLAGGER (SYMBOL, WITH FLAGS)**
W021-2	36X36	9.00						FRESH OIL
W021-5	48X48	16.00						SHOULDER WORK AHEAD
W022-1	48X48	16.00						BLASTING ZONE AHEAD
W022-2	42X36	10.50						TURN OFF 2-WAY RADIO AND PHONE
W022-3	42X36	10.50						END BLASTING ZONE
G022-1	21X15	2.19						WET PAINT (ARROW PIVOTS)

SIGN	SIZE IN.	AREA SQ.FT.	QTY EACH	TOTAL AREA SQ.FT.	QTY RELOC EACH	TOTAL RELOC SQ.FT.	SIGN NUM.	DESCRIPTION
GUIDE SIGNS								
E05-1	36X48	12.00						GORE EXIT
E05-2	48X36	12.00						EXIT OPEN
E05-2a	48X36	12.00						EXIT CLOSED
G020-1	60X24	10.00						ROAD WORK NEXT XX MILES
G020-2	48X24	8.00						END ROAD WORK
G020-4	36X18	4.50						PILOT CAR FOLLOW ME
G020-4a	42X30	8.75						PILOT CAR IN USE WAIT & FOLLOW
G020-4a	18X12	1.50						PILOT CAR IN USE WAIT & FOLLOW
G020-5aP	36X24	6.00						WORK ZONE (PLAQUE)
M04-8a	**24X18**	**3.00**	**2**	**6**			**52**	**END DETOUR**
M04-9L	48X36	12.00						DETOUR (LEFT ARROW)
M04-9R	48X36	12.00						DETOUR (RIGHT ARROW)
M04-9P	48X12	4.00						STREET NAME (PLAQUE)
M04-10L	48X18	6.00						DETOUR (ARROW LEFT)
M04-10R	48X18	6.00						DETOUR (ARROW RIGHT)
REGULATORY SIGNS								
R1-1	48X48	13.25						STOP
R1-2	48TRI.	6.93						YIELD
R1-2a	36X36	9.00						TO ONCOMING TRAFFIC (PLAQUE)
R1-3P	30X12	2.50						ALL WAY (PLAQUE)
R2-1	36X48	12.00						SPEED LIMIT XX
R3-1	48X48	16.00						NO RIGHT TURN (SYMBOL)
R3-2	48X48	16.00						NO LEFT TURN (SYMBOL)
R3-3	36X36	9.00						NO TURNS
R3-4	48X48	16.00						NO U-TURN (SYMBOL)
R3-7L	30X30	6.25						LEFT LANE MUST TURN LEFT
R3-7R	30X30	6.25						RIGHT LANE MUST TURN RIGHT
R4-1	36X48	12.00						DO NOT PASS
R4-2	36X48	12.00						PASS WITH CARE
R4-7a	36X48	12.00						KEEP RIGHT (HORIZONTAL ARROW)
R4-8a	36X48	12.00						KEEP LEFT (HORIZONTAL ARROW)
R5-1	30X30	6.25						DO NOT ENTER
R5-1a	36X24	6.00						WRONG WAY
R6-1L	54X18	6.75						ONE WAY ARROW (LEFT)
R6-1R	54X18	6.75						ONE WAY ARROW (RIGHT)
R6-2L	24X30	5.00						ONE WAY (LEFT)
R6-2R	24X30	5.00						ONE WAY (RIGHT)
R9-9	24X12	2.00						SIDEWALK CLOSED
R10-6	24X36	6.00						STOP HERE ON RED (45° ARROW)
R11-2	**48X30**	**10.00**	**2**	**20**			**29**	**ROAD CLOSED**
R11-3a	**60X30**	**12.50**	**1**	**13**			**63**	**ROAD CLOSED 3 MILES AHEAD LOCAL TRAFFIC ONLY**
R11-3a	**60x30**	**12.50**	**2**	**25**			**63A**	**ROAD CLOSED 2 MILES AHEAD LOCAL TRAFFIC ONLY**
R11-3a	**60x30**	**12.50**	**2**	**25**			**63B**	**ROAD CLOSED 1 MILES AHEAD LOCAL TRAFFIC ONLY**
R11-4	60x30	12.50						ROAD CLOSED TO THRU TRAFFIC
MISCELLANEOUS SIGNS								
CONST-5	**96X48**	**32.00**	**2**	**64**			**65**	**BRIDGE IMPROVEMENT**
CONST-8	**48X36**	**12.00**	**2**	**24**			**64**	**WORK ZONE NO PHONE ZONE**
SPECIAL	**36X60**	**15.00**	**12**	**180**			**60A**	**✱✱ DETOUR SIGN E. RTE 90 STRAIGHT**
SPECIAL	**36X60**	**15.00**	**3**	**45**			**60B**	**✱✱ DETOUR SIGN E. RTE 90 ADV RIGHT**
SPECIAL	**36X60**	**15.00**	**3**	**45**			**60C**	**✱✱ DETOUR SIGN E. RTE 90 ADV LEFT**
SPECIAL	**36X60**	**15.00**	**3**	**45**			**60D**	**✱✱ DETOUR SIGN E. RTE 90 RIGHT**
SPECIAL	**36X60**	**15.00**	**5**	**75**			**60E**	**✱✱ DETOUR SIGN E. RTE 90 LEFT**
SPECIAL	**36X60**	**15.00**	**1**	**15**			**60F**	**✱✱ DETOUR SIGN E. RTE 90 45° RIGHT**
SPECIAL	**36X60**	**15.00**	**1**	**15**			**60H**	**✱✱ DETOUR SIGN E. RTE 90 ADV. 45° RT**
SPECIAL	**36X60**	**15.00**	**14**	**210**			**63A**	**✱✱ DETOUR SIGN W. RTE 90 STRAIGHT**
SPECIAL	**36X60**	**15.00**	**2**	**30**			**63B**	**✱✱ DETOUR SIGN W. RTE 90 ADV RIGHT**
SPECIAL	**36X60**	**15.00**	**1**	**15**			**63C**	**✱✱ DETOUR SIGN W. RTE 90 ADV LEFT**
SPECIAL	**36X60**	**15.00**	**2**	**30**			**63D**	**✱✱ DETOUR SIGN W. RTE 90 RIGHT**
SPECIAL	**36X60**	**15.00**	**1**	**15**			**63E**	**✱✱ DETOUR SIGN W. RTE 90 LEFT**
SPECIAL	**36X60**	**15.00**	**1**	**15**			**63G**	**✱✱ DETOUR SIGN W. RTE 90 45° LEFT**
SPECIAL	**36X60**	**15.00**	**1**	**15**			**63I**	**✱✱ DETOUR SIGN W. RTE 90 ADV. 45° LT**
SPECIAL	**84X72**	**42.00**	**3**	**126**			**61**	**✱✱ RTE 90 CLOSED 2 MILES E. OF 71**
SPECIAL	**84X72**	**42.00**	**1**	**42**			**62**	**✱✱ RTE 90 CLOSED 3 MILES S. OF K**

616-10.05 CONSTRUCTION SIGNS	TOTAL	1255
616-10.10 RELOCATED SIGNS	TOTAL	✱

ITEM NUMBER	TOTAL QTY	DESCRIPTION
6122008		IMPACT ATTENUATOR 40 MPH (SAND BARRELS)
6122009		IMPACT ATTENUATOR 45 MPH (SAND BARRELS)
6122010		IMPACT ATTENUATOR 50 MPH (SAND BARRELS)
6122012		IMPACT ATTENUATOR 55 MPH (SAND BARRELS)
6122014		IMPACT ATTENUATOR 60 MPH (SAND BARRELS)
6122017		IMPACT ATTENUATOR 65 MPH (SAND BARRELS)
6122019		IMPACT ATTENUATOR 70 MPH (SAND BARRELS)
6122020		REPLACEMENT SAND BARREL
6122030		IMPACT ATTENUATOR (RELOCATION)
6123000A		TRUCK MOUNTED ATTENUATOR (TMA)
6161008	**4**	**ADVANCED WARNING RAIL SYSTEM**
6161012		BUOYS (BOATS KEEP OUT)
6161013		BUOYS (NO WAKE)
6161014		SPECIAL SIGN ASSEMBLY (BOATS KEEP OUT)
6161025	**60**	**CHANNELIZER (TRIM LINE)**
6161030	**10**	**TYPE III MOVEABLE BARRICADE**
6161033		DIRECTION INDICATOR BARRICADE
6161040		FLASHING ARROW PANEL
6161047		TYPE III OBJECT MARKER
6161055		SEQUENTIAL FLASHING WARNING LIGHT
6161070		TUBULAR MARKER
6161095		RADAR SPEED ADVISORY SYSTEM
6161096		CHANGEABLE MESSAGE SIGN, COMMISSION FURNISHED/RETAINED
6161098A		CHANGEABLE MESSAGE SIGN W/O COMM. INTERFACE, CONTRACTOR FURNISHED/RETAINED
6161099	**4**	**CHANGEABLE MESSAGE SIGN WITH COMM. INTERFACE, CONTRACTOR FURNISHED/RETAINED**
6162000A		WORK ZONE TRAFFIC SIGNAL SYSTEM
6162002		TEMPORARY LONG-TERM RUMBLE STRIPS
6173600D		TEMPORARY TRAFFIC BARRIER CONTRACTOR FURNISHED/RETAINED
6173602B		TEMPORARY TRAFFIC BARRIER CONTRACTOR FURNISHED/COMMISSION RETAINED
6174000A		TEMP. TRAFFIC BARRIER HEIGHT TRANSITION
6175010A		RELOCATING TEMPORARY TRAFFIC BARRIER
6176000B		TEMPORARY TRAFFIC BARRIER COMMISSION FURNISHED/RETAINED
6177000B		TEMP. TRAFFIC BARRIER HEIGHT TRANSITION COMMISSION FURNISHED/RETAINED
6208064A		TEMPORARY RAISED PAVEMENT MARKER
9029400		TEMPORARY TRAFFIC SIGNALS
9029401		TEMPORARY TRAFFIC SIGNALS AND LIGHTING

✱ NO DIRECT PAYMENT WILL BE MADE FOR RELOCATING OR COVERING SIGNS OR DEVICES

✱✱ SEE TRAFFIC CONTROL PLANS FOR SPECIAL SIGN DETAILS FOR SPECIFIC NUMBER OF EACH "M" SERIES SIGNS NEEDED, AS SHOWN IN THE DETOUR ROUTE.

QUANTITY SHEET
SHEET 3 OF 3

STATE OF MISSOURI
PAUL JOSEPH KRONLAGE
NUMBER EN 023328
REGISTERED PROFESSIONAL ENGINEER
05/20/2024 5:55:11 AM
Paul J. Kronlage - Civil
MO PE - 023328

DATE PREPARED 5/19/2024
ROUTE 90 | STATE MO
DISTRICT SW | SHEET NO. 3
COUNTY MCDONALD
JOB NO. J7S0532
CONTRACT ID.
PROJECT NO.
BRIDGE NO.

DESCRIPTION | DATE

IF A SEAL IS PRESENT ON THIS SHEET IT HAS BEEN ELECTRONICALLY SEALED AND DATED.

MISSOURI HIGHWAYS AND TRANSPORTATION COMMISSION
105 WEST CAPITOL
JEFFERSON CITY, MO 65102
1-888-ASK-MODOT (1-888-275-6636)

EFK•Moen
Civil Engineering Design
13523 Barrett Parkway Dr
Suite 250
St Louis, MO 63021
Phone 314-394-3100
Fax 314-394-3199
Missouri Certificate of Authority: 001578

REV.

EXISTING BRIDGE P0973: FILL FACE STA. 70+76.50, 45°R.A. SKEW.
REMOVE 7-SPAN, 391', SUPERSTRUCTURE, & SUBSTRUCTURE.

CONSTRUCT 3-SPAN, 370', PRESTRESSED CONCRETE NU-GIRDER BRIDGE (A9230). FILL FACE STA. 70+86.88, 45°R.A. SKEW
CONSTRUCT BRIDGE RAIL (TYPE H BARRIER) & BRIDGE APPROACH SLAB (MINOR).

NOTES:
1) ANY WORK INDICATED ON THE PLANS THAT EXTEND BEYOND THE PROJECT LIMITS IS CONSIDERED INCIDENTAL TO AND A PART OF THE CONSTRUCTION OF THIS PROJECT.
2) ALL BEARINGS BASED ON STATE PLANE BEARINGS WEST ZONE.
3) NO DIRECT PAY FOR CLEARING & GRUBBING.

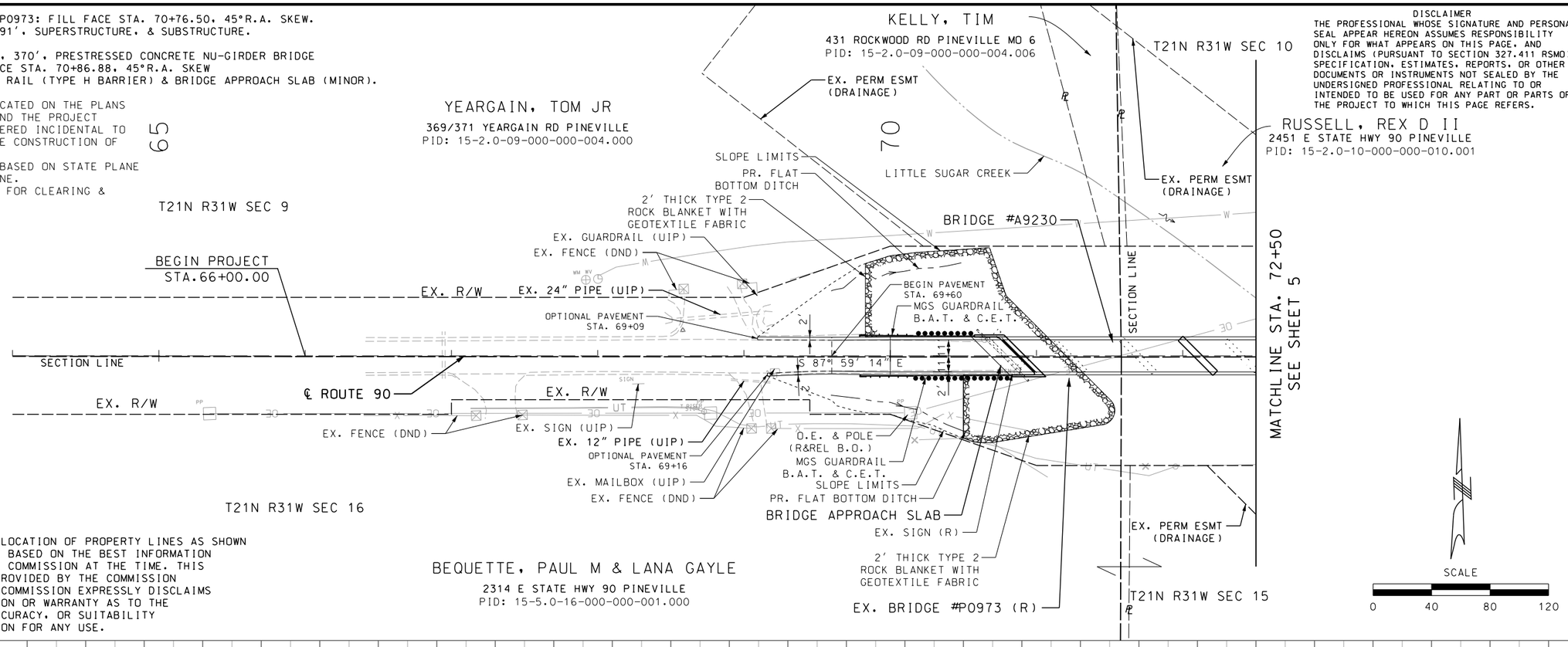

THE APPROXIMATE LOCATION OF PROPERTY LINES AS SHOWN ON THE PLANS ARE BASED ON THE BEST INFORMATION AVAILABLE TO THE COMMISSION AT THE TIME. THIS INFORMATION IS PROVIDED BY THE COMMISSION "AS-IS" AND THE COMMISSION EXPRESSLY DISCLAIMS AND REPRESENTATION OR WARRANTY AS TO THE COMPLETENESS, ACCURACY, OR SUITABILITY OF THE INFORMATION FOR ANY USE.

DISCLAIMER
THE PROFESSIONAL WHOSE SIGNATURE AND PERSONAL SEAL APPEAR HEREON ASSUMES RESPONSIBILITY ONLY FOR WHAT APPEARS ON THIS PAGE, AND DISCLAIMS (PURSUANT TO SECTION 327.411 RSMO) SPECIFICATION, ESTIMATES, REPORTS, OR OTHER DOCUMENTS OR INSTRUMENTS NOT SEALED BY THE UNDERSIGNED PROFESSIONAL RELATING TO OR INTENDED TO BE USED FOR ANY PART OR PARTS OF THE PROJECT TO WHICH THIS PAGE REFERS.

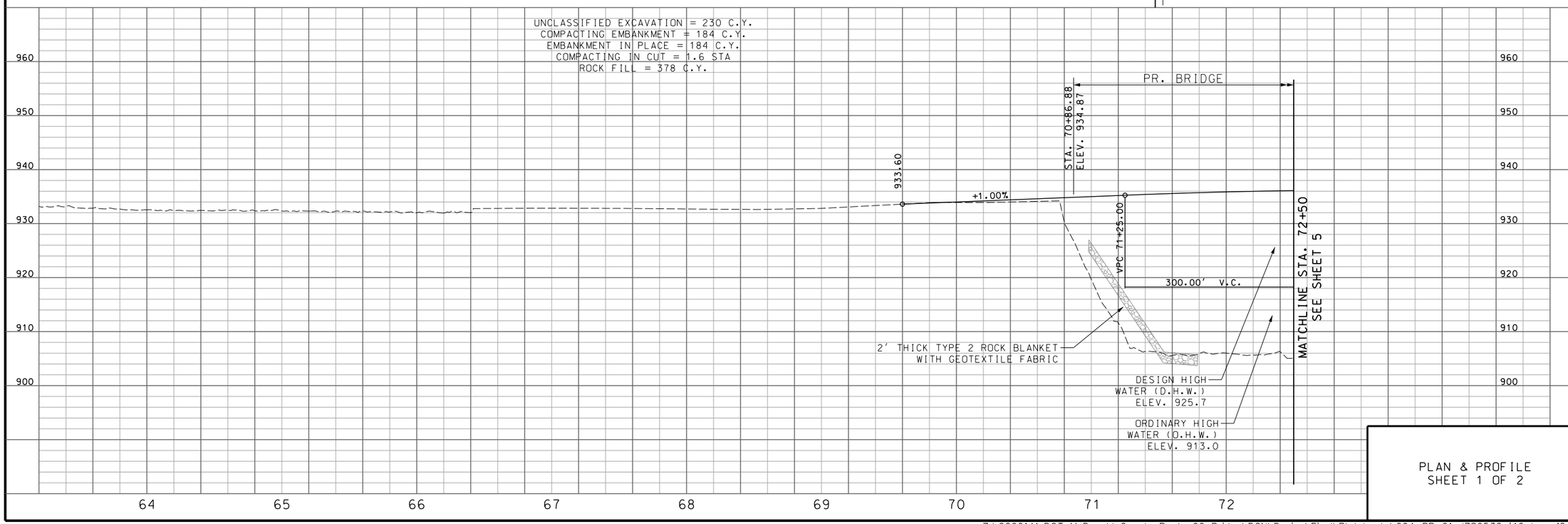

PLAN & PROFILE
SHEET 1 OF 2

STATE OF MISSOURI
PAUL JOSEPH KRONLAGE
NUMBER EN 023328
REGISTERED PROFESSIONAL ENGINEER
05/20/2024 5:56:39 AM
Paul J. Kronlage - Civil
MO PE - 023328

DATE PREPARED	
5/19/2024	
ROUTE 90	STATE MO
DISTRICT SW	SHEET NO. 4
COUNTY MCDONALD	
JOB NO. J7S0532	
CONTRACT ID.	
PROJECT NO.	
BRIDGE NO.	

DATE	DESCRIPTION

IF A SEAL IS PRESENT ON THIS SHEET IT HAS BEEN ELECTRONICALLY SEALED AND DATED.

MISSOURI HIGHWAYS AND TRANSPORTATION COMMISSION
105 WEST CAPITOL
JEFFERSON CITY, MO 65102
1-888-ASK-MODOT (1-888-275-6636)

EFK•Moen
Civil Engineering Design
13523 Barrett Parkway Dr
Suite 250
St. Louis, MO 63021
Phone 314-394-3100
Fax 314-394-3199
Missouri Certificate of Authority: 001578

REV.

SEE PLAN & PROFILE SHEET 1 OF 2 FOR PROP. BRIDGE AND EXISTING BRIDGE DETAILS

DISCLAIMER
THE PROFESSIONAL WHOSE SIGNATURE AND PERSONAL SEAL APPEAR HEREON ASSUMES RESPONSIBILITY ONLY FOR WHAT APPEARS ON THIS PAGE, AND DISCLAIMS (PURSUANT TO SECTION 327.411 RSMO) SPECIFICATION, ESTIMATES, REPORTS, OR OTHER DOCUMENTS OR INSTRUMENTS NOT SEALED BY THE UNDERSIGNED PROFESSIONAL RELATING TO OR INTENDED TO BE USED FOR ANY PART OR PARTS OF THE PROJECT TO WHICH THIS PAGE REFERS.

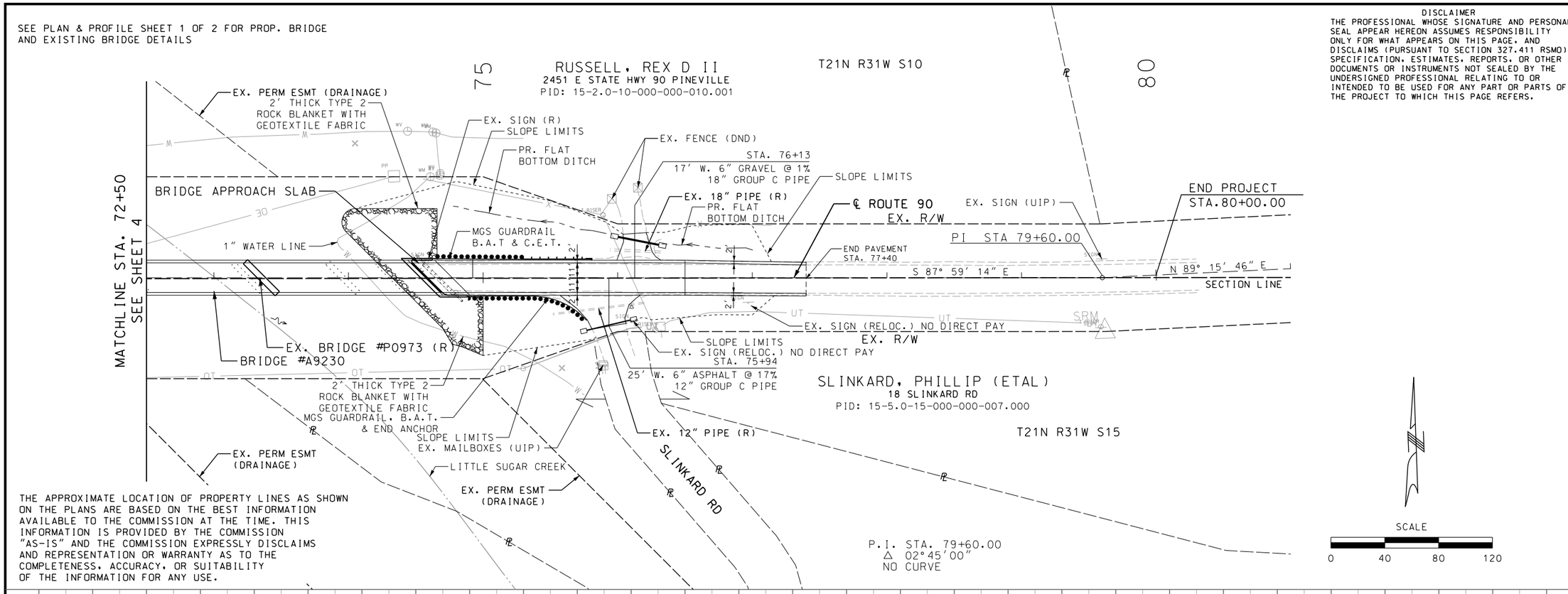

THE APPROXIMATE LOCATION OF PROPERTY LINES AS SHOWN ON THE PLANS ARE BASED ON THE BEST INFORMATION AVAILABLE TO THE COMMISSION AT THE TIME. THIS INFORMATION IS PROVIDED BY THE COMMISSION "AS-IS" AND THE COMMISSION EXPRESSLY DISCLAIMS AND REPRESENTATION OR WARRANTY AS TO THE COMPLETENESS, ACCURACY, OR SUITABILITY OF THE INFORMATION FOR ANY USE.

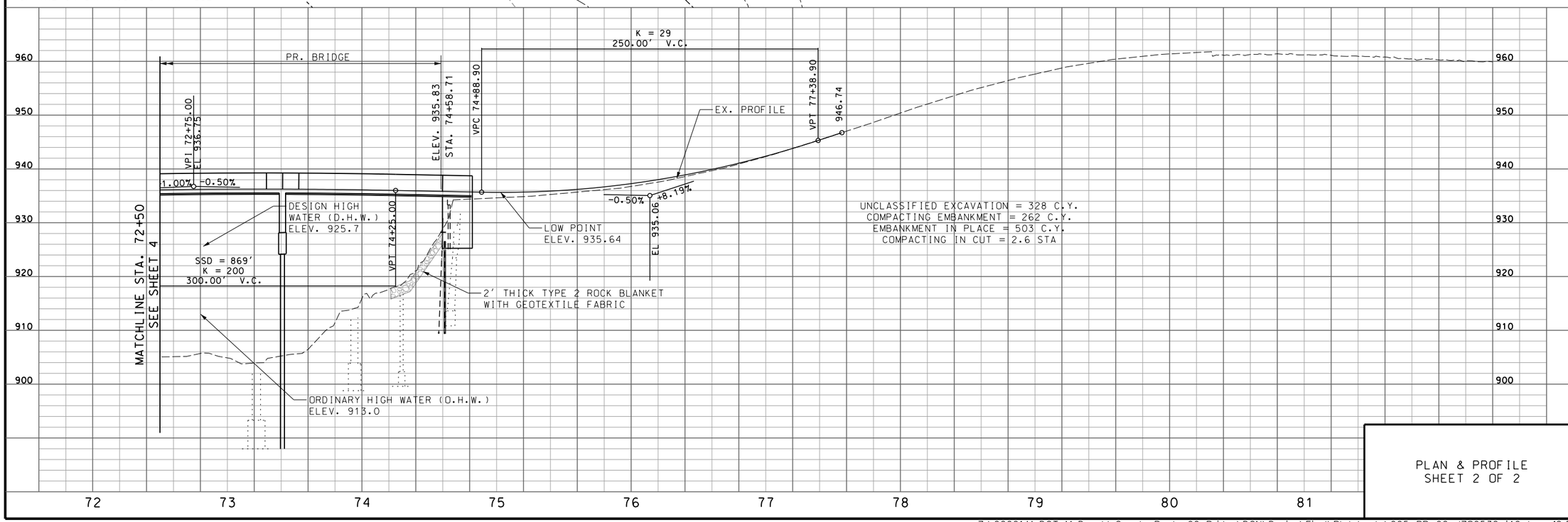

PLAN & PROFILE
SHEET 2 OF 2

STATE OF MISSOURI
PAUL JOSEPH KRONLAGE
NUMBER
EN 023328
REGISTERED PROFESSIONAL ENGINEER

Paul J. Kronlage

05/20/2024 5:57:53 AM
Paul J. Kronlage - Civil
MO PE - 023328

DATE PREPARED	
5/19/2024	
ROUTE 90	STATE MO
DISTRICT SW	SHEET NO. 5
COUNTY MCDONALD	
JOB NO. J7S0532	
CONTRACT ID.	
PROJECT NO.	
BRIDGE NO.	

DATE	DESCRIPTION

IF A SEAL IS PRESENT ON THIS SHEET IT HAS BEEN ELECTRONICALLY SEALED AND DATED.

MISSOURI HIGHWAYS AND TRANSPORTATION COMMISSION
105 WEST CAPITOL
JEFFERSON CITY, MO 65102
1-888-ASK-MODOT (1-888-275-6636)

EFK•Moen
Civil Engineering Design
13523 Barrett Parkway Dr
Suite 250
St. Louis, MO 63021
Phone 314-394-3100
Fax 314-394-3199
Missouri Certificate of Authority: 001578

REV.

Z:\22001 MoDOT McDonald County Route 90 Bridge\DGN\Design\Final\Plotsheets\005_PP_02_J7S0532_i40.dgn 12:57:04 PM 5/19/2024

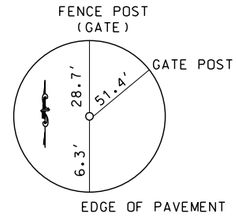

CONTROL POINT NO.1
5/8" REBAR IN ENTRANCE
N:140409.601
E:2852392.913
EL:931.810

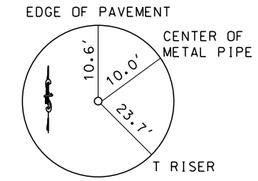

CONTROL POINT NO.2
5/8" REBAR
N:140343.786
E:2853143.212
EL:935.070

DISCLAIMER
THE PROFESSIONAL WHOSE SIGNATURE AND PERSONAL SEAL APPEAR HEREON ASSUMES RESPONSIBILITY ONLY FOR WHAT APPEARS ON THIS PAGE, AND DISCLAIMS (PURSUANT TO SECTION 327.411 RSMO) SPECIFICATION, ESTIMATES, REPORTS, OR OTHER DOCUMENTS OR INSTRUMENTS NOT SEALED BY THE UNDERSIGNED PROFESSIONAL RELATING TO OR INTENDED TO BE USED FOR ANY PART OR PARTS OF THE PROJECT TO WHICH THIS PAGE REFERS.

ALL PROJECT COORDINATES HAVE BEEN PROJECTED FROM THE MISSOURI STATE PLANE COORDINATE (SPC) SYSTEM OF 1983 USING AN AVERAGE PROJECT PROJECTION (GRID TO GROUND) FACTOR. TO GET BACK TO STATE PLANE COORDINATES, MULTIPY THE PROJECT COORDINATES BY THE AVERAGE GRID FACTOR AS SHOWN IN THE "REFERENCE CONTROL INFORMATION" PORTION OF THIS TABLE.

PROJECT COORDINATE INFORMATION	
COORDINATE SYSTEM	MISSOURI STATE PLANE
HORIZONTAL DATUM	NAD83
VERTICAL DATUM	NAVD88
GEOID MODEL	GEOID12B
ELEVATIONS DETERMINED BY	MODOT GNSS
PROJECT PROJECTION FACTOR	1.0000935

REFERENCE CONTROL INFORMATION	
COORDINATE SYSTEM	MISSOURI STATE PLANE
CONTROL STATION	MISSOURI CORS
DESIGNATION	MODOT ANDERSON CORS ARP
CORS_ID	MOA2
PID	DN6071
LATITUDE	36°41'03.39412" N
LONGITUDE	94°26'18.24745" W
NORTHING (M)	54735.913
EASTING (M)	855505.198
ZONE	WEST
PROJECT AVERAGE GRID FACTOR	0.9999065

EXAMPLE OF PROJECT COORDINATE TO S.P.C.

PROJECT NORTHING X AVERAGE GRID FACTOR
= STATE PLANE NORTHING
PROJECT EASTING X AVERAGE GRID FACTOR
= STATE PLANE EASTING

EXAMPLE: CONTROL POINT #1
N 140,409.601 X 0.9999065 = N 140,396.473
E 2,852,392.913 X 0.9999065 = E 2,852,126.214

LINEAR UNIT CONVERSION

1 METER = 3.280833333 US SURVEY FEET (USFT)

COORDINATE POINT LISTING

SHEET NO	STATION	LOCATION	OFFSET (USFT)	MODIFIED STATE PLANE (GROUND) NORTHING (US SURVEY FT)	EASTING (US SURVEY FT)	ELEVATION (US SURVEY FT)	DESCRIPTION	GPK POINT ID
PROJECT CONTROL POINTS								
4	68+58.18	℄ RTE 90	17.56' LT	140,409.601	2,852,392.913	931.810	5/8" REBAR IN ENTRANCE	1
4	76+10.33	℄ RTE 90	21.86' RT	140,343.786	2,853,143.212	935.070	5/'8" REBAR (CMP)	2
ALIGNMENTS								
4	60+00.00	℄ RTE 90		140,422.193	2,851,534.647	933.600	POINT OF BEGINNING	
5	79+60.00	℄ RTE 90		140,353.357	2,853,493.438	946.741	PI	
5	90+00.00	℄ RTE 90		140,366.740	2,854,533.351	946.741	POINT OF ENDING	

REFERENCE/ COORDINATE POINTS
SHEET 1 OF 1

STATE OF MISSOURI
PAUL JOSEPH KRONLAGE
NUMBER
EN 023328
REGISTERED PROFESSIONAL ENGINEER

05/20/2024 5:58:12 AM
Paul J. Kronlage - Civil
MO PE - 023328

DATE PREPARED	
5/19/2024	
ROUTE 90	STATE MO
DISTRICT SW	SHEET NO. 6
COUNTY MCDONALD	
JOB NO. J7S0532	
CONTRACT ID.	
PROJECT NO.	
BRIDGE NO.	

DATE	DESCRIPTION

IF A SEAL IS PRESENT ON THIS SHEET IT HAS BEEN ELECTRONICALLY SEALED AND DATED.

MISSOURI HIGHWAYS AND TRANSPORTATION COMMISSION
105 WEST CAPITOL
JEFFERSON CITY, MO 65102
1-888-ASK-MODOT (1-888-275-6636)

EFK•Moen
Civil Engineering Design
13523 Barrett Parkway Dr
Suite 250
St. Louis, MO 63021
Phone 314-394-3100
Fax 314-394-3199
Missouri Certificate of Authority: 001578

REV.

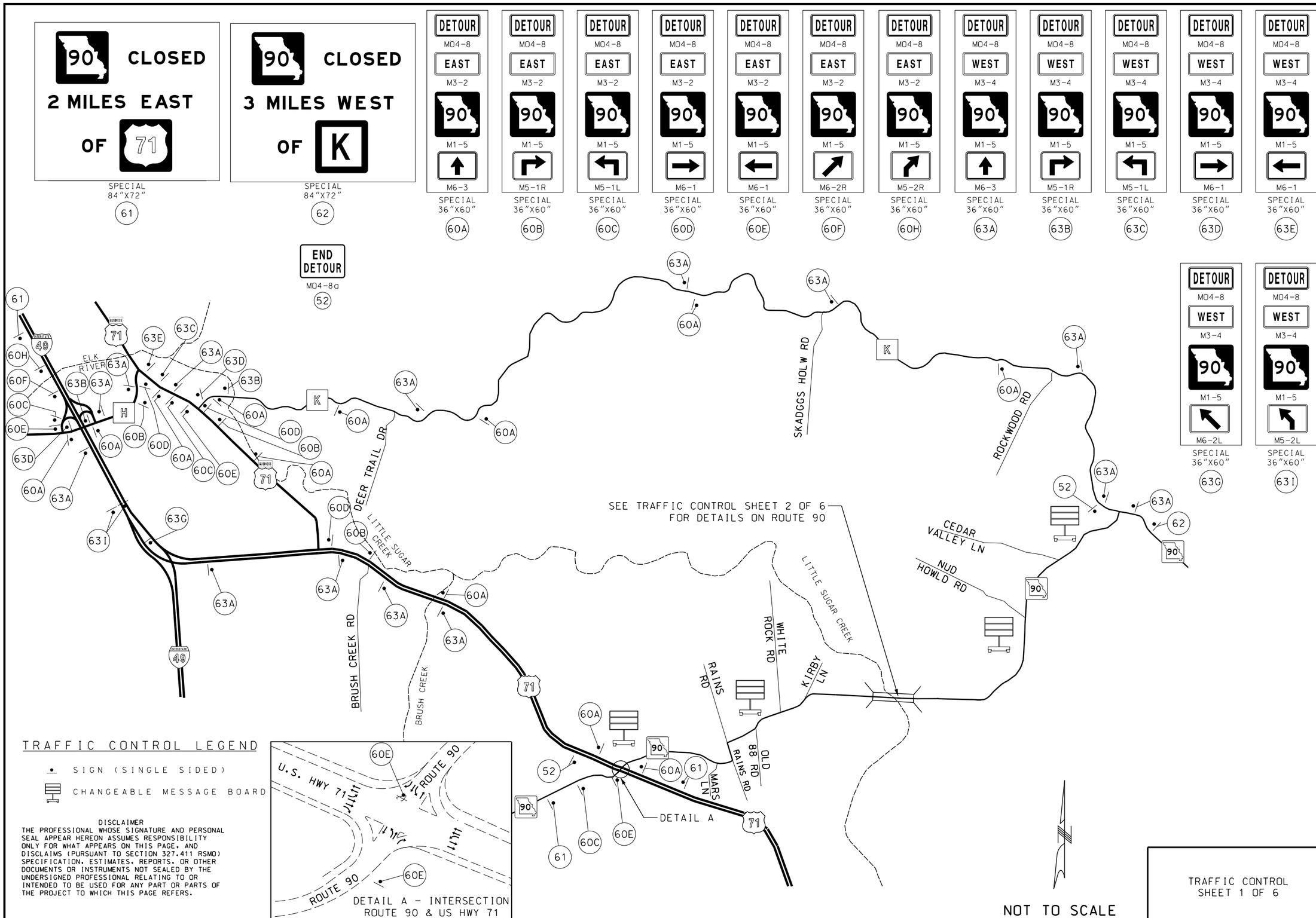

TRAFFIC CONTROL LEGEND

- SIGN (SINGLE SIDED)
- CHANGEABLE MESSAGE BOARD

DISCLAIMER
THE PROFESSIONAL WHOSE SIGNATURE AND PERSONAL SEAL APPEAR HEREON ASSUMES RESPONSIBILITY ONLY FOR WHAT APPEARS ON THIS PAGE, AND DISCLAIMS (PURSUANT TO SECTION 327.411 RSMO) SPECIFICATION, ESTIMATES, REPORTS, OR OTHER DOCUMENTS OR INSTRUMENTS NOT SEALED BY THE UNDERSIGNED PROFESSIONAL RELATING TO OR INTENDED TO BE USED FOR ANY PART OR PARTS OF THE PROJECT TO WHICH THIS PAGE REFERS.

TRAFFIC CONTROL
SHEET 1 OF 6

STATE OF MISSOURI
PAUL JOSEPH KRONLAGE
NUMBER EN 023328
REGISTERED PROFESSIONAL ENGINEER

05/20/2024 5:58:29 AM
Paul J. Kronlage - Civil
MO PE - 023328

DATE PREPARED	
5/19/2024	
ROUTE 90	STATE MO
DISTRICT SW	SHEET NO. 7

COUNTY
MCDONALD

JOB NO.
J7S0532

CONTRACT ID.

PROJECT NO.

BRIDGE NO.

DATE	DESCRIPTION

IF A SEAL IS PRESENT ON THIS SHEET IT HAS BEEN ELECTRONICALLY SEALED AND DATED.

MISSOURI HIGHWAYS AND TRANSPORTATION COMMISSION
105 WEST CAPITOL
JEFFERSON CITY, MO 65102
1-888-ASK-MODOT (1-888-275-6636)

EFK•Moen
Civil Engineering Design
13523 Barrett Parkway Dr
Suite 250
St. Louis, MO 63021
Phone 314-394-3100
Fax 314-394-3199
Missouri Certificate of Authority: 001578

REV.

Z:\22001 MoDOT McDonald County Route 90 Bridge\DGN\Design\Final\Plotsheets\007_TC_01_J7S0532_i1000.dgn 12:57:06 PM 5/19/2024

GENERAL NOTES:

1. PLACEMENT OF TRAFFIC CONTROL SIGNS IS APPROXIMATE AND MAY BE ADJUSTED TO FIT FIELD CONDITIONS AS APPROVED BY THE ENGINEER.
2. SIGN SPACING 350′ OR AS DIRECTED BY THE ENGINEER.
3. ANY EXISTING SIGN THAT CONFLICTS WITH THE TRAFFIC CONTROL SIGNING SHALL BE COMPLETELY COVERED OR REMOVED. NO DIRECT PAY.
4. SIGNS ASSOCIATED WITH TYPE III BARRICADE SHALL BE MOUNTED ON POST BEHIND BARRICADE.
5. CMS MESSAGES AS APPROVED BY ENGINEER.
6. ALL SIGNS SHOWN ON THIS SHEET ARE NON-PORTABLE AND SHALL REMAIN IN PLACE FOR THE DURATION OF THE PROJECT.

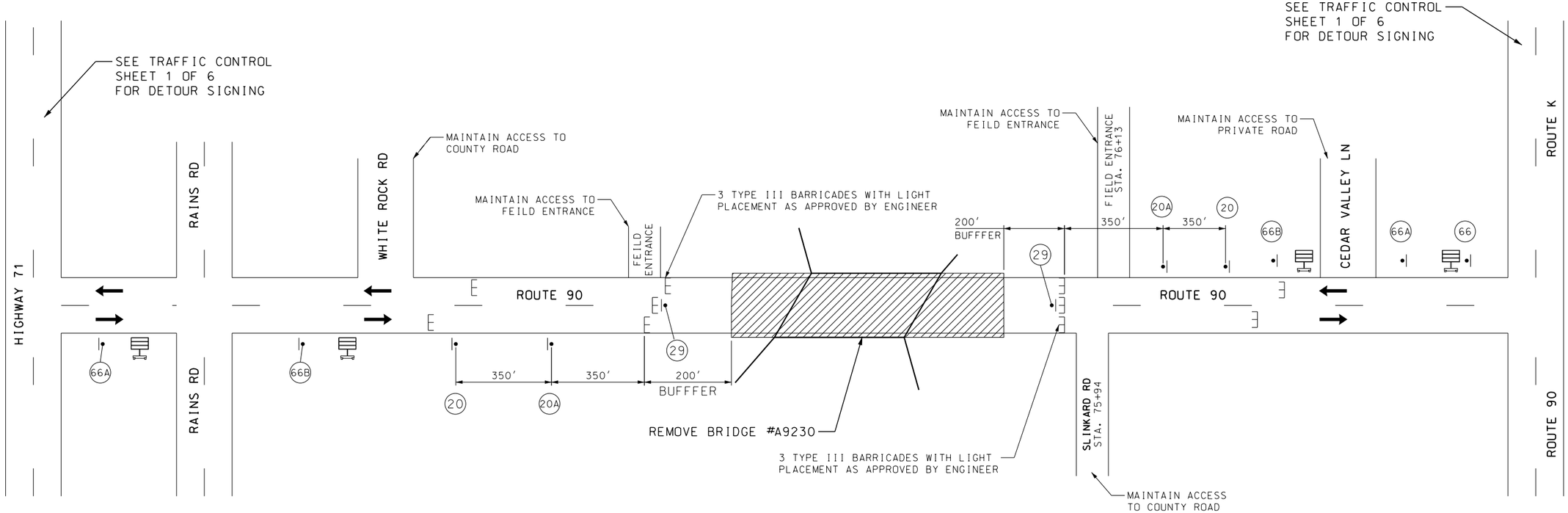

TRAFFIC CONTROL LEGEND

- SIGN (SINGLE SIDED)
- CHANNELIZER
- BARRICADE
- CHANGEABLE MESSAGE BOARD

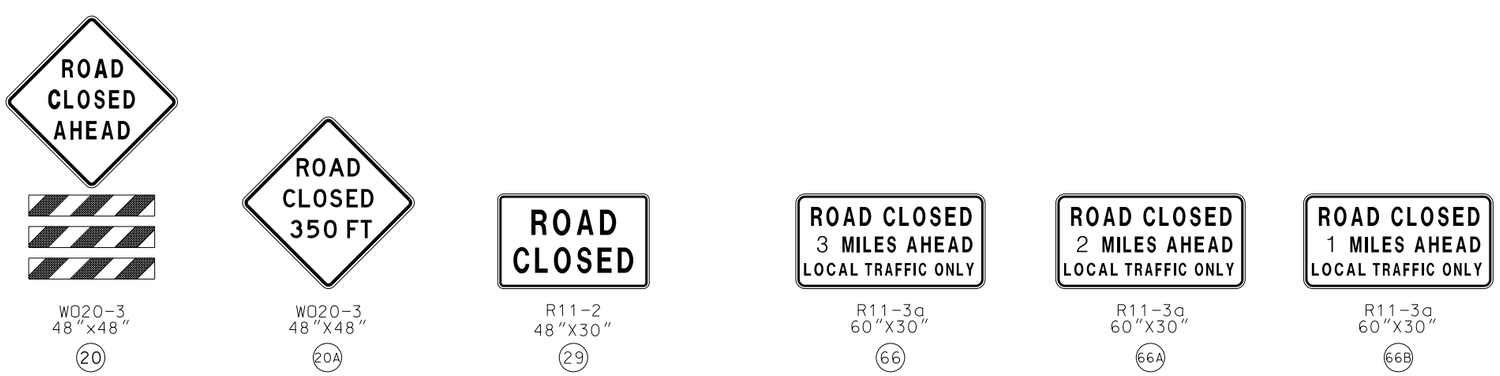

NOT TO SCALE

TRAFFIC CONTROL
SHEET 2 OF 6

STATE OF MISSOURI
PAUL JOSEPH KRONLAGE
NUMBER EN 023328
REGISTERED PROFESSIONAL ENGINEER

05/20/2024 5:58:51 AM
Paul J. Kronlage - Civil
MO PE - 023328

DATE PREPARED	
5/19/2024	
ROUTE 90	STATE MO
DISTRICT SW	SHEET NO. 8
COUNTY MCDONALD	
JOB NO. J7S0532	
CONTRACT ID.	
PROJECT NO.	
BRIDGE NO.	

DATE	DESCRIPTION

MISSOURI HIGHWAYS AND TRANSPORTATION COMMISSION
105 WEST CAPITOL
JEFFERSON CITY, MO 65102
1-888-ASK-MODOT (1-888-275-6636)

EFK•Moen
Civil Engineering Design
13523 Barrett Parkway Dr
Suite 250
St. Louis, MO 63021
Phone 314-394-3100
Fax 314-394-3199
Missouri Certificate of Authority: 001578

IF A SEAL IS PRESENT ON THIS SHEET IT HAS BEEN ELECTRONICALLY SEALED AND DATED.

REV.

Z:\22001 MoDOT McDonald County Route 90 Bridge\DGN\Design\Final\Plotsheets\008_TC_02_J7S0532_i1.dgn 12:57:06 PM 5/19/2024

TA-10 - LANE CLOSURE ON TWO-LANE ROAD USING FLAGGERS

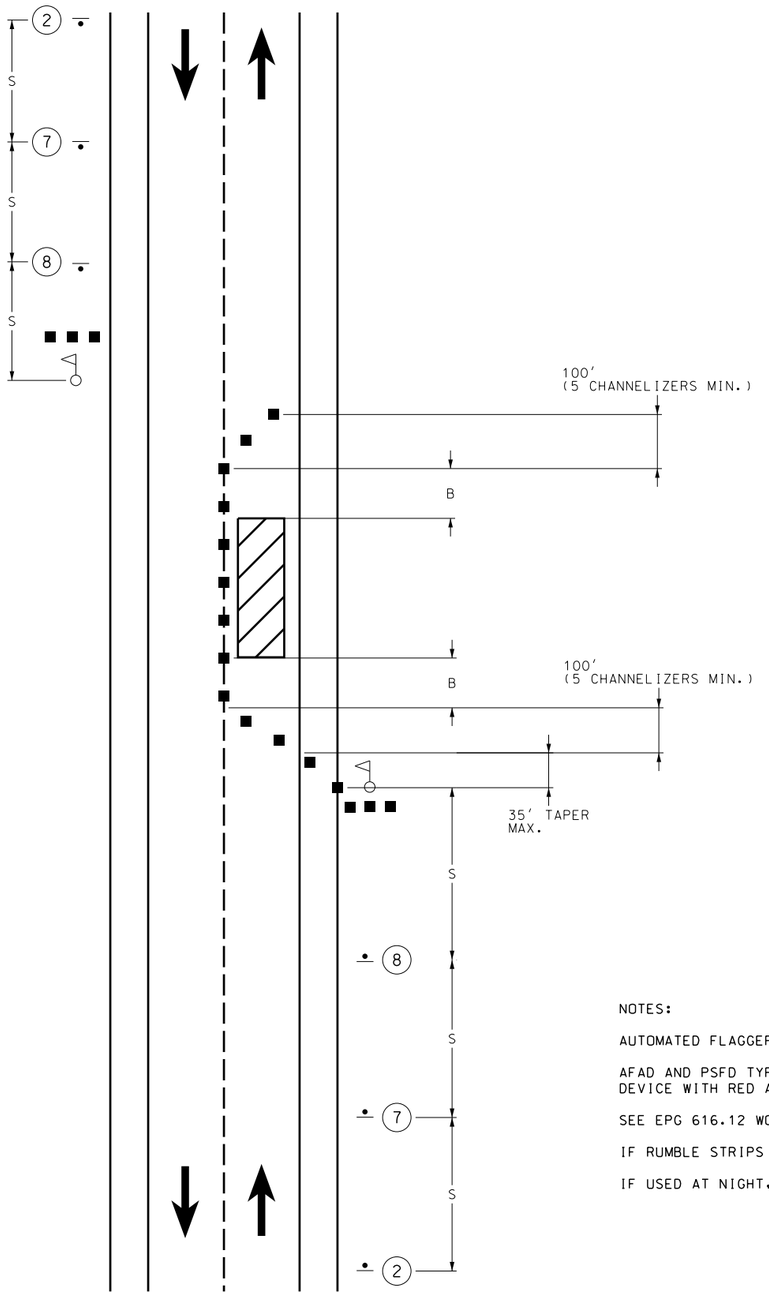

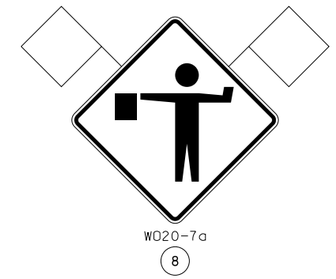

TRAFFIC CONTROL LEGEND

- SIGN (SINGLE SIDED)
- FLAGGER
- WORK AREA
- ADVANCED WARNING RAIL SYSTEM (AWRS)

SPEED	SIGN SPACING (FT.)		TAPER LENGTH (FT.)		OPTIONAL	CHANNELIZER SPACING (FT.)	
PERMANENT POSTED (MPH)	UNDIVIDED (S)	DIVIDED (S)	SHOULDER (1) (T1)	LANE (2) (T2)	BUFFER LENGTH (FT.) (B)	TAPERS	BUFFER/WORK AREA
0-35	200	-	-	-	280	-	40
40-45	350	-	-	-	400	-	80
50-55	500	-	-	-	560	-	80
60-70	1000	-	-	-	840	-	120

1. SHOULDER TAPER LENGTH BASED ON 10 FT. (STANDARD SHOULDER WIDTH) OFFSET. 2. LANE TAPER LENGTH BASED ON 12 FT. (STANDARD LANE WIDTH) OFFSET.

NOTES:

AUTOMATED FLAGGER ASSISTANCE DEVICES (AFAD) AND PORTABLE SIGNAL FLAGGING DEVICES (PSFD) MAY BE USED AS AN ALTERNATIVE FLAGGING OPERATION.

AFAD AND PSFD TYPICAL APPLICATIONS AND CRITERIA ARE LOCATED AT THE FOLLOWING: EPG 616.8.10A (TA-10A) LANE CLOSURE ON TWO-LANE HIGHWAYS USING AUTOMATED FLAGGER ASSISTANCE DEVICE WITH RED AND AMBER SIGNAL SYSTEM & EPG 616.8.10C (TA-10C) LANE CLOSURE ON TWO-LANE HIGHWAYS USING PORTABLE SIGNAL FLAGGING DEVICE.

SEE EPG 616.12 WORK ZONE SPEED LIMITS FOR SPEED LIMIT GUIDELINES.

IF RUMBLE STRIPS ARE USED, REVIEW 616.6.87 RUMBLE STRIPS.

IF USED AT NIGHT, THE FLAGGER STATIONS SHALL BE ILLUMINATED WITH AN AVERAGE MAINTAINED INTENSITY OF 0.6 FOOTCANDLES (6.5 LUX).

NOT TO SCALE

TRAFFIC CONTROL
SHEET 3 OF 6

STATE OF MISSOURI
PAUL JOSEPH KRONLAGE
NUMBER EN 023328
REGISTERED PROFESSIONAL ENGINEER

05/20/2024 5:59:13 AM
Paul J. Kronlage - Civil
MO PE - 023328

DATE PREPARED	
5/19/2024	
ROUTE 90	STATE MO
DISTRICT SW	SHEET NO. 9
COUNTY MCDONALD	
JOB NO. J7S0532	
CONTRACT ID.	
PROJECT NO.	
BRIDGE NO.	

DATE	DESCRIPTION

IF A SEAL IS PRESENT ON THIS SHEET IT HAS BEEN ELECTRONICALLY SEALED AND DATED.

MISSOURI HIGHWAYS AND TRANSPORTATION COMMISSION
105 WEST CAPITOL
JEFFERSON CITY, MO 65102
1-888-ASK-MODOT (1-888-275-6636)

EFK•Moen
Civil Engineering Design
13523 Barrett Parkway Dr
Suite 250
St Louis, MO 63021
Phone 314-394-3100
Fax 314-394-3199
Missouri Certificate of Authority: 001578

REV.

BEGIN/END OF PROJECT SIGNING - DE/CM & MT

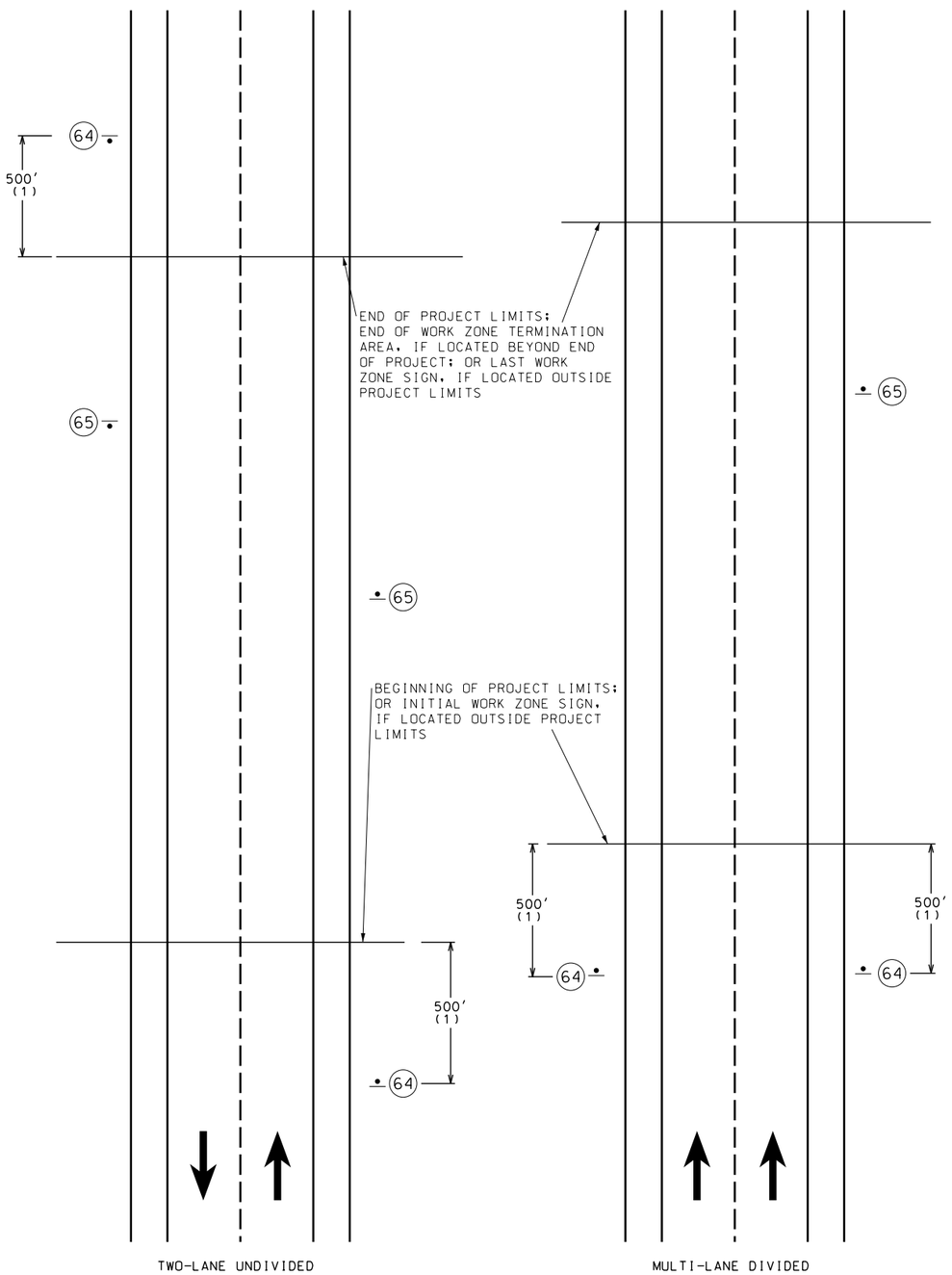

NOT TO SCALE

CONST-8

64

(4)

CONST-5-96

65

(2) (3)

NOTES:

OTHER SIGNS SUCH AS DETOUR OR ALTERNATE ROUTE SIGNING MAY BE USED OUTSIDE THE PROJECT LIMITS.

ANY EXISTING SIGNING THAT CONFLICTS WITH THE TRAFFIC CONTROL SIGNING SHALL BE COMPLETELY COVERED OR REMOVED.

(1) DISTANCE MAY BE ADJUSTED ACCORDING TO FIELD CONDITIONS WHERE TRAFFIC BACKUPS ARE EXPECTED BEYOND THE ADVANCE WARNING AREA. ADDITIONAL SIGNING MAY BE NEEDED.

(2) CONST-5-96 OR CONST-5-48 SIGN IS PLACED IN A VISIBLE AREA WITHIN THE PROJECT LIMITS PROVIDED ITS PLACEMENT DOES NOT DISRUPT A SEQUENCE OF SIGNS. IF A VISIBLE LOCATION WITHIN THE PROJECT IS NOT AVAILABLE, THE SIGN MAY BE PLACED 500 FEET BEFORE SIGN G020-1 ROAD WORK NEXT XX MILES.

(3) THE "POINT OF PRESENCE" SIGN IS AVAILABLE IN TWO SIZES DEPENDING ON ROADWAY CONDITIONS. THE 48 IN. X 36 IN. SIGN IS USED ON LOW VOLUME ROUTES THAT CARRY 400 AADT OR LESS, ON PROJECTS THAT HAVE A DURATION OF 4 WEEKS OR LESS OR IN URBAN AREAS WHERE THERE IS INSUFFICIENT LIGHTS OF WAY FOR A EIGHT FOOT WIDE SIGN. THE 96 IN. X 48 IN. VERSION OF THE SIGN IS USED IN ALL OTHER APPLICATIONS, BUT CAN ALSO BE USED IN PLACE OF THE 48 IN. X 36 IN. SIGN IF ADDED EMPHASIS IS DEEMED NECESSARY.

(4) THE "WORK ZONE NO PHONE ZONE" SIGN IS PLACED A MINIMUM OF 500 FEET BEFORE THE ROAD WORK AHEAD SIGN.

TRAFFIC CONTROL
SHEET 4 OF 6

STATE OF MISSOURI
PAUL JOSEPH KRONLAGE
NUMBER
EN 023328
REGISTERED PROFESSIONAL ENGINEER

05/20/2024 5:59:29 AM
Paul J. Kronlage - Civil
MO PE - 023328

DATE PREPARED	
5/19/2024	
ROUTE	STATE
90	MO
DISTRICT	SHEET NO.
SW	10
COUNTY	
MCDONALD	
JOB NO.	
J7S0532	
CONTRACT ID.	
PROJECT NO.	
BRIDGE NO.	

DESCRIPTION	DATE

IF A SEAL IS PRESENT ON THIS SHEET IT HAS BEEN ELECTRONICALLY SEALED AND DATED.

MISSOURI HIGHWAYS AND TRANSPORTATION COMMISSION
105 WEST CAPITOL
JEFFERSON CITY, MO 65102
1-888-ASK-MODOT (1-888-275-6636)

EFK•Moen
Civil Engineering Design
13523 Barrett Parkway Dr
Suite 250
St. Louis, MO 63021
Phone 314-394-3100
Fax 314-394-3199
Missouri Certificate of Authority: 001578

REV.

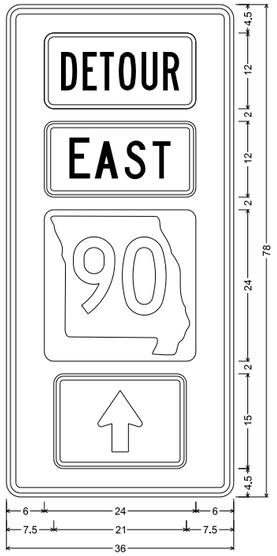

MO4-11 SHF-FLAT SHEET FLUORESCENT;
2.250" Radius, 0.875" Border, 0.625" Indent, Black on, Orange;
Table of letter and object lefts

6.000	
6.000	
6.000	
7.500	

SIGN NO.	60A
STATION	VARIES
ROADWAY	VARIES

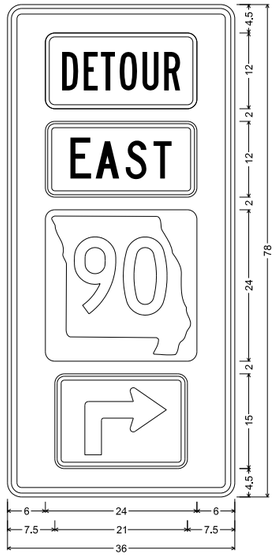

MO4-11 SHF-FLAT SHEET FLUORESCENT;
2.250" Radius, 0.875" Border, 0.625" Indent, Black on, Orange;
Table of letter and object lefts

6.000	
6.000	
6.000	
7.500	

SIGN NO.	60B
STATION	VARIES
ROADWAY	VARIES

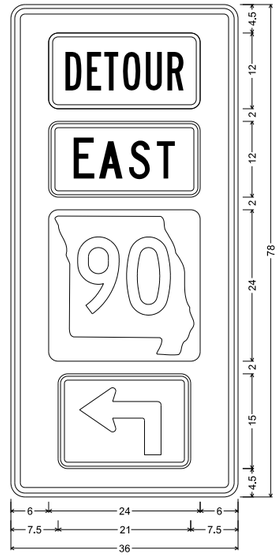

MO4-11 SHF-FLAT SHEET FLUORESCENT;
2.250" Radius, 0.875" Border, 0.625" Indent, Black on, Orange;
Table of letter and object lefts

6.000	
6.000	
6.000	
7.500	

SIGN NO.	60C
STATION	VARIES
ROADWAY	VARIES

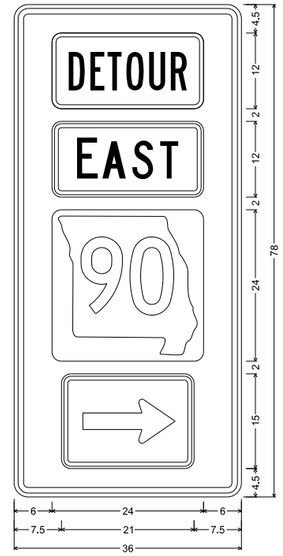

MO4-11 SHF-FLAT SHEET FLUORESCENT;
2.250" Radius, 0.875" Border, 0.625" Indent, Black on, Orange;
Table of letter and object lefts

6.000	
6.000	
6.000	
7.500	

SIGN NO.	60D
STATION	VARIES
ROADWAY	VARIES

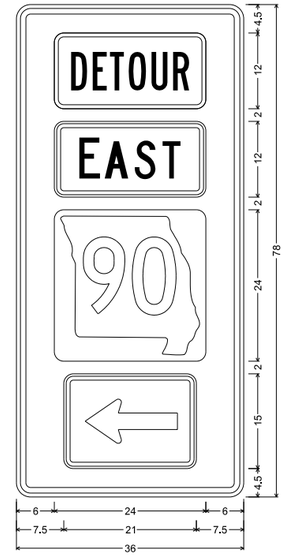

MO4-11 SHF-FLAT SHEET FLUORESCENT;
2.250" Radius, 0.875" Border, 0.625" Indent, Black on, Orange;
Table of letter and object lefts

6.000	
6.000	
6.000	
7.500	

SIGN NO.	60E
STATION	VARIES
ROADWAY	VARIES

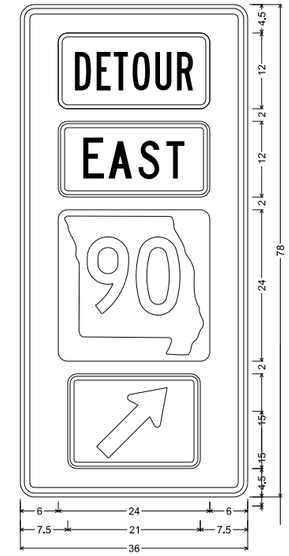

MO4-11 SHF-FLAT SHEET FLUORESCENT;
2.250" Radius, 0.875" Border, 0.625" Indent, Black on, Orange;
Table of letter and object lefts

6.000	
6.000	
6.000	
7.500	

SIGN NO.	60F
STATION	VARIES
ROADWAY	VARIES

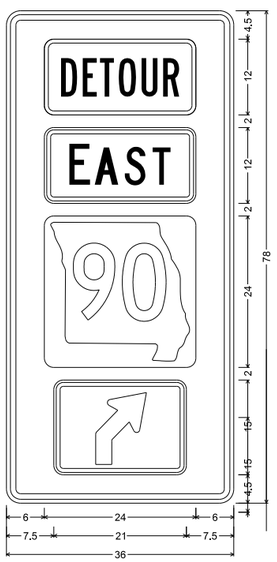

MO4-11 SHF-FLAT SHEET FLUORESCENT;
2.250" Radius, 0.875" Border, 0.625" Indent, Black on, Orange;
Table of letter and object lefts

6.000	
6.000	
6.000	
7.500	

SIGN NO.	60H
STATION	VARIES
ROADWAY	VARIES

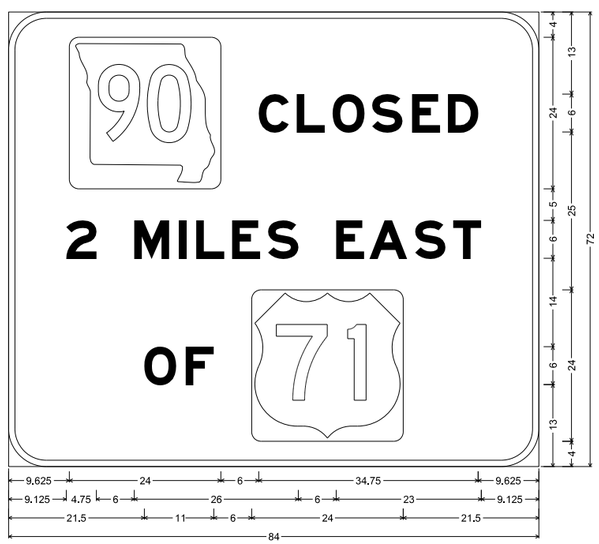

SPECIAL SHF-FLAT SHEET FLUORESCENT;
6.000" Radius, 1.000" Border, Black on, Orange;
"CLOSED", E Mod; "2 MILES EAST", E Mod; "OF", E Mod;
Table of letter and object lefts

SIGN NO.	61
STATION	VARIES
ROADWAY	VARIES

9.625	C 39.625	L 45.625	O 51.375	S 57.625	E 63.875	D 69.625					
2 9.125	M 19.875	I 27.000	L 29.750	E 35.375	S 41.125	E 51.875	A 57.125	S 64.375	T 70.375		
O 21.500	F 28.000	38.500									

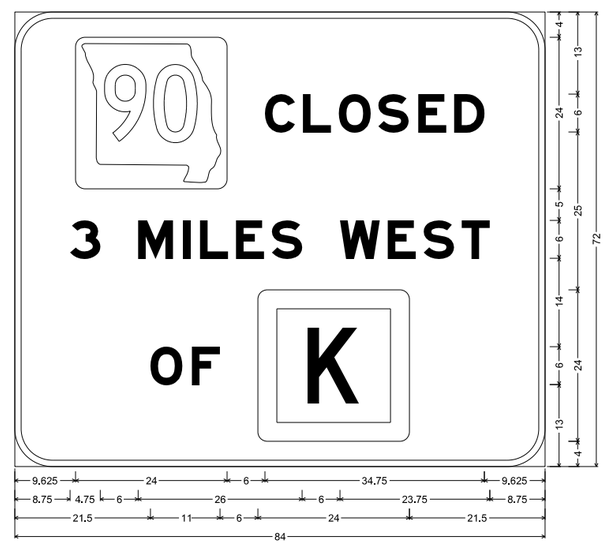

SPECIAL SHF-FLAT SHEET FLUORESCENT;
6.000" Radius, 1.000" Border, Black on, Orange;
"CLOSED", E Mod; "3 MILES WEST", E Mod; "OF", E Mod;
Table of letter and object lefts

SIGN NO.	62
STATION	VARIES
ROADWAY	VARIES

9.625	C 39.625	L 45.625	O 51.375	S 57.625	E 63.875	D 69.625					
3 8.750	M 19.500	I 26.625	L 29.375	E 35.000	S 40.750	W 51.500	E 59.125	S 64.750	T 70.750		
O 21.500	F 28.000	38.500									

TRAFFIC CONTROL
SHEET 5 OF 6

D-31

STATE OF MISSOURI
PAUL JOSEPH KRONLAGE
NUMBER
EN 023328
REGISTERED PROFESSIONAL ENGINEER

05/20/2024 5:59:45 AM
Paul J. Kronlage - Civil
MO PE - 023328

DATE PREPARED	
5/19/2024	
ROUTE 90	STATE MO
DISTRICT SW	SHEET NO. 11
COUNTY MCDONALD	
JOB NO. J7S0532	
CONTRACT ID.	
PROJECT NO.	
BRIDGE NO.	

DATE	DESCRIPTION

IF A SEAL IS PRESENT ON THIS SHEET IT HAS BEEN ELECTRONICALLY SEALED AND DATED.

MISSOURI HIGHWAYS AND TRANSPORTATION COMMISSION
105 WEST CAPITOL
JEFFERSON CITY, MO 65102
1-888-ASK-MODOT (1-888-275-6636)

EFK•Moen
Civil Engineering Design
13523 Barrett Parkway Dr
Suite 250
St Louis, MO 63021
Phone 314-394-3100
Fax 314-394-3199
Missouri Certificate of Authority: 001578

REV.

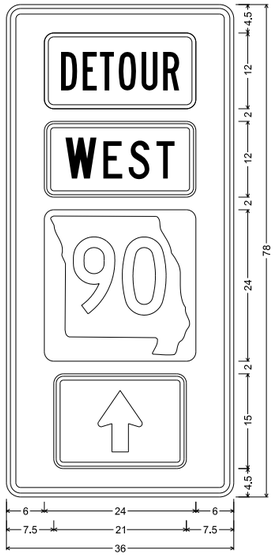

MO4-11 SHF-FLAT SHEET FLUORESCENT;
2.250" Radius, 0.875" Border, 0.625" Indent, Black on, Orange;
Table of letter and object lefts

6.000	
6.000	
6.000	
7.500	

SIGN NO.	63A
STATION	VARIES
ROADWAY	VARIES

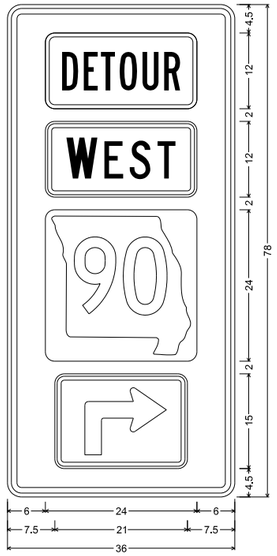

MO4-11 SHF-FLAT SHEET FLUORESCENT;
2.250" Radius, 0.875" Border, 0.625" Indent, Black on, Orange;
Table of letter and object lefts

6.000	
6.000	
6.000	
7.500	

SIGN NO.	63B
STATION	VARIES
ROADWAY	VARIES

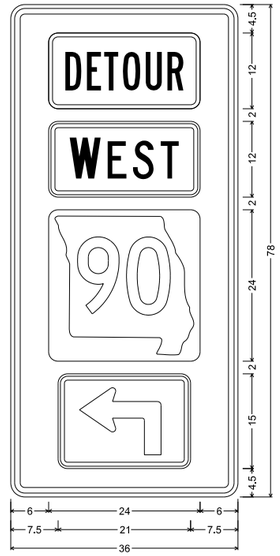

MO4-11 SHF-FLAT SHEET FLUORESCENT;
2.250" Radius, 0.875" Border, 0.625" Indent, Black on, Orange;
Table of letter and object lefts

6.000	
6.000	
6.000	
7.500	

SIGN NO.	63C
STATION	VARIES
ROADWAY	VARIES

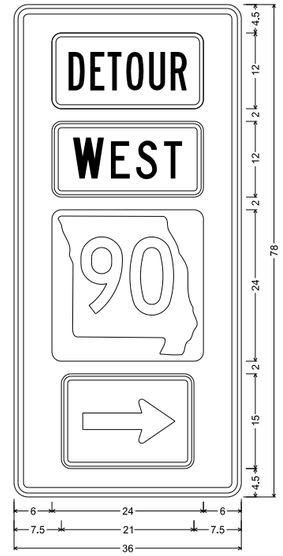

MO4-11 SHF-FLAT SHEET FLUORESCENT;
2.250" Radius, 0.875" Border, 0.625" Indent, Black on, Orange;
Table of letter and object lefts

6.000	
6.000	
6.000	
7.500	

SIGN NO.	63D
STATION	VARIES
ROADWAY	VARIES

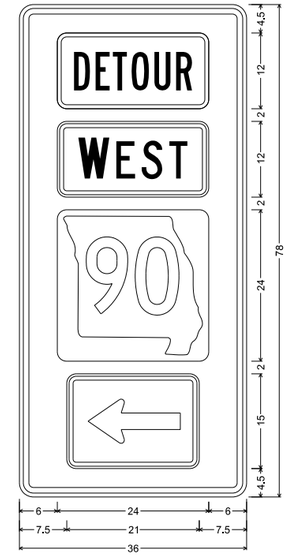

MO4-11 SHF-FLAT SHEET FLUORESCENT;
2.250" Radius, 0.875" Border, 0.625" Indent, Black on, Orange;
Table of letter and object lefts

6.000	
6.000	
6.000	
7.500	

SIGN NO.	63E
STATION	VARIES
ROADWAY	VARIES

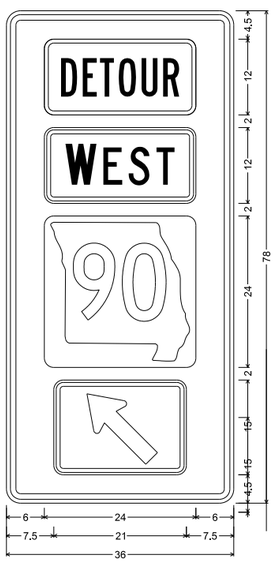

MO4-11 SHF-FLAT SHEET FLUORESCENT;
2.250" Radius, 0.875" Border, 0.625" Indent, Black on, Orange;
Table of letter and object lefts

6.000	
6.000	
6.000	
7.500	

SIGN NO.	63G
STATION	VARIES
ROADWAY	VARIES

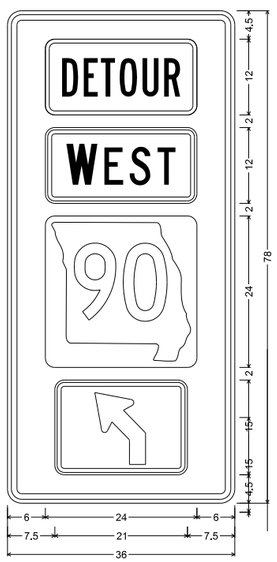

MO4-11 SHF-FLAT SHEET FLUORESCENT;
2.250" Radius, 0.875" Border, 0.625" Indent, Black on, Orange;
Table of letter and object lefts

6.000	
6.000	
6.000	
7.500	

SIGN NO.	63I
STATION	VARIES
ROADWAY	VARIES

TRAFFIC CONTROL
SHEET 6 OF 6

D-31

STATE OF MISSOURI
PAUL JOSEPH KRONLAGE
NUMBER EN 023328
REGISTERED PROFESSIONAL ENGINEER

05/20/2024 5:59:59 AM
Paul J. Kronlage - Civil
MO PE - 023328

DATE PREPARED	
5/19/2024	
ROUTE 90	STATE MO
DISTRICT SW	SHEET NO. 12
COUNTY MCDONALD	
JOB NO. J7S0532	
CONTRACT ID.	
PROJECT NO.	
BRIDGE NO.	

DATE	DESCRIPTION

IF A SEAL IS PRESENT ON THIS SHEET IT HAS BEEN ELECTRONICALLY SEALED AND DATED.

MISSOURI HIGHWAYS AND TRANSPORTATION COMMISSION
105 WEST CAPITOL
JEFFERSON CITY, MO 65102
1-888-ASK-MODOT (1-888-275-6636)

EFK•Moen
Civil Engineering Design
13523 Barrett Parkway Dr
Suite 250
St Louis, MO 63021
Phone 314-394-3100
Fax 314-394-3199
Missouri Certificate of Authority: 001578

REV.

DISCLAIMER
THE PROFESSIONAL WHOSE SIGNATURE AND PERSONAL SEAL APPEAR HEREON ASSUMES RESPONSIBILITY ONLY FOR WHAT APPEARS ON THIS PAGE. AND DISCLAIMS (PURSUANT TO SECTION 327.411 RSMO) SPECIFICATION, ESTIMATES, REPORTS, OR OTHER DOCUMENTS OR INSTRUMENTS NOT SEALED BY THE UNDERSIGNED PROFESSIONAL RELATING TO OR INTENDED TO BE USED FOR ANY PART OR PARTS OF THE PROJECT TO WHICH THIS PAGE REFERS.

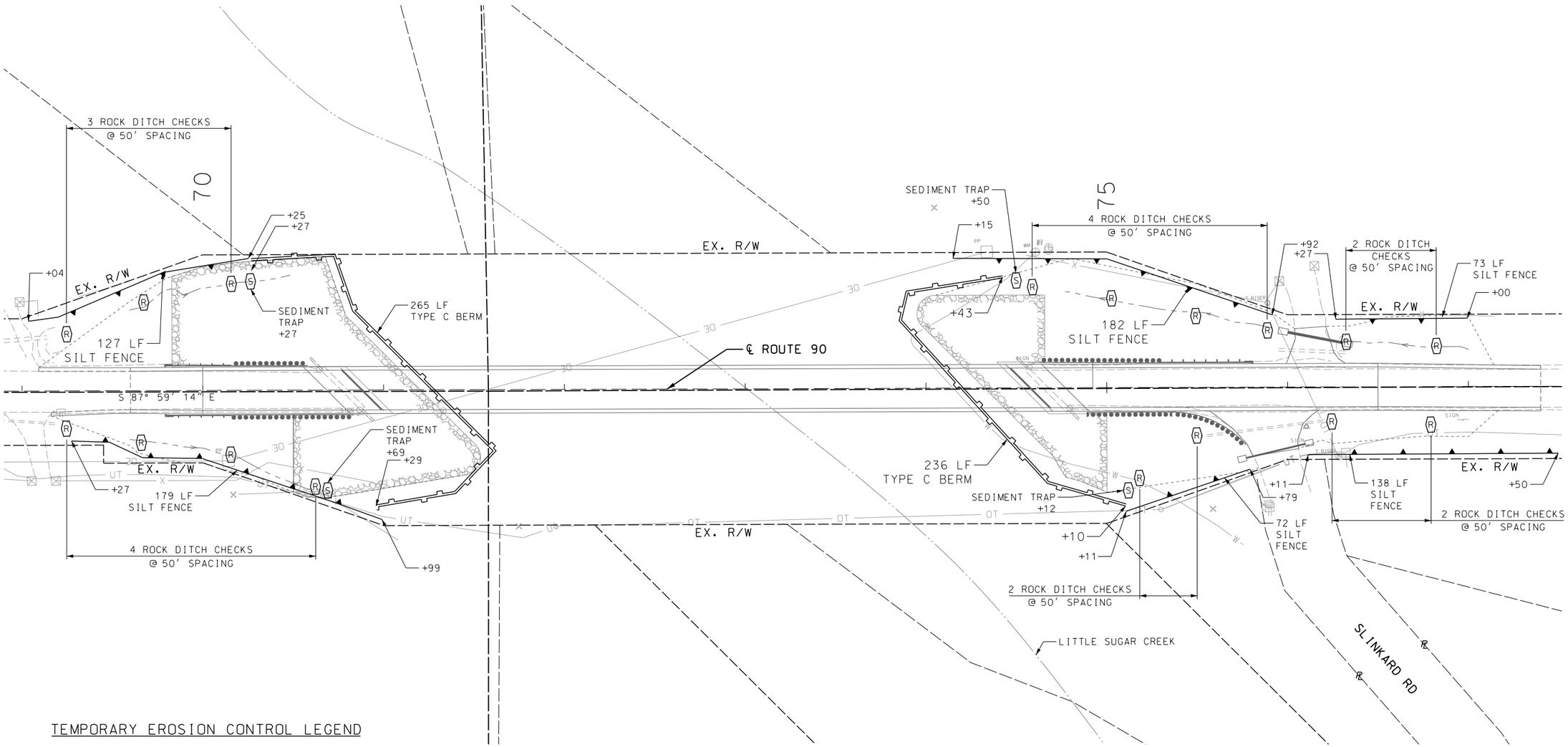

TEMPORARY EROSION CONTROL LEGEND

- (R) ROCK DITCH CHECK
- (S) SEDIMENT TRAP
- TEMPORARY BERM TYPE C
- SILT FENCE

SCALE
0 30 60 90

EROSION CONTROL
SHEET 1 OF 1

STATE OF MISSOURI
PAUL JOSEPH KRONLAGE
NUMBER EN 023328
REGISTERED PROFESSIONAL ENGINEER

05/20/2024 6:00:38 AM
Paul J. Kronlage - Civil
MO PE - 023328

DATE PREPARED	
5/19/2024	
ROUTE	STATE
90	MO
DISTRICT	SHEET NO.
SW	13
COUNTY	
MCDONALD	
JOB NO.	
J7S0532	
CONTRACT ID.	
PROJECT NO.	
BRIDGE NO.	

DATE	DESCRIPTION

IF A SEAL IS PRESENT ON THIS SHEET IT HAS BEEN ELECTRONICALLY SEALED AND DATED.

MISSOURI HIGHWAYS AND TRANSPORTATION COMMISSION
105 WEST CAPITOL
JEFFERSON CITY, MO 65102
1-888-ASK-MODOT (1-888-275-6636)

EFK•Moen
Civil Engineering Design
13523 Barrett Parkway Dr
Suite 250
St. Louis, MO 63021
Phone 314-394-3100
Fax 314-394-3199
Missouri Certificate of Authority: 001578

REV.

SIGNS			
SIGN NO	2.5 IN PSST LF	Concrete Anchor 7 GA. EA	REMARKS
R1-1	16	1	RELOCATE EX. SIGN
W2-8	16	1	RELOCATE EX. SIGN
SUBTOTAL	32	2	
PAY TOTAL	32	2	

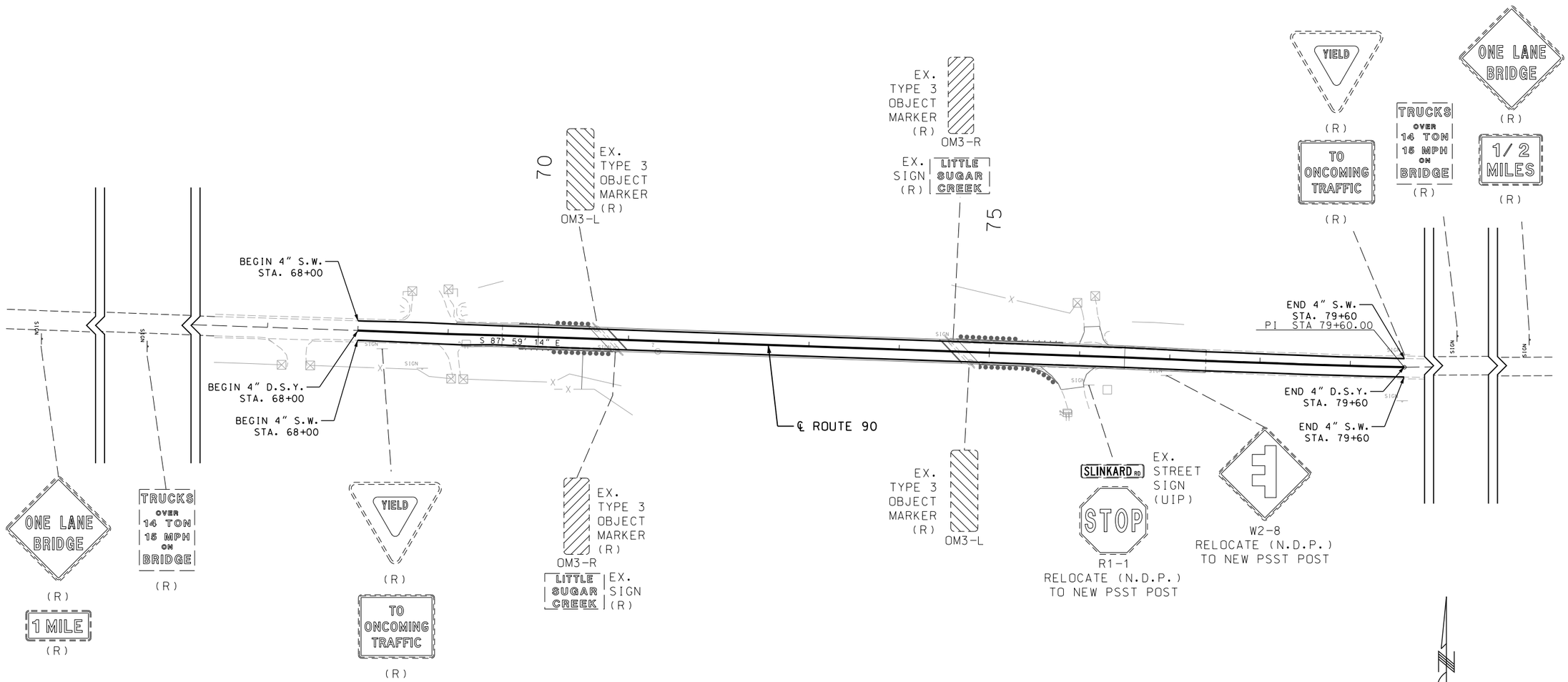

PAVEMENT MARKING & SIGNING
SHEET 1 OF 1

STATE OF MISSOURI
PAUL JOSEPH KRONLAGE
NUMBER
EN 023328
REGISTERED PROFESSIONAL ENGINEER

05/20/2024 6:01:35 AM
Paul J. Kronlage - Civil
MO PE - 023328

DATE PREPARED	
5/19/2024	
ROUTE 90	STATE MO
DISTRICT SW	SHEET NO. 14
COUNTY MCDONALD	
JOB NO. J7S0532	
CONTRACT ID.	
PROJECT NO.	
BRIDGE NO.	

DESCRIPTION	DATE

IF A SEAL IS PRESENT ON THIS SHEET IT HAS BEEN ELECTRONICALLY SEALED AND DATED.

MISSOURI HIGHWAYS AND TRANSPORTATION COMMISSION
105 WEST CAPITOL
JEFFERSON CITY, MO 65102
1-888-ASK-MODOT (1-888-275-6636)

EFK•Moen
Civil Engineering Design
13523 Barrett Parkway Dr
Suite 250
St. Louis, MO 63021
Phone 314-394-3100
Fax 314-394-3199
Missouri Certificate of Authority: 001578

REV.

Estimated Quantities

Item		Substr.	Superstr.	Total
Class 1 Excavation	cu. yard	70		70
Removal of Bridges (P0973)	lump sum			1
Bridge Approach Slab (Minor)	sq. yard		116	116
Drilled Shafts (4 ft. 0 in. Dia.)	linear foot	24		24
Rock Sockets (3 ft. 6 in. Dia.)	linear foot	40		40
Video Camera Inspection	each	4		4
Foundation Inspection Holes	linear foot	80		80
Sonic Logging Testing	each	4		4
Galvanized Structural Steel Piles (12 in.)	linear foot	264		264
Pre-Bore for Piling	linear foot	90		90
Pile Point Reinforcement	each	12		12
Class B Concrete (Substructure)	cu. yard	121.6		121.6
Type H Barrier	linear foot		810	810
Slab on Concrete NU-Girder	sq. yard		1180	1180
NU 63, Prestressed Concrete NU-Girder	linear foot		1098	1098
Reinforcing Steel (Bridges)	pound	25,580		25,580
Conduit System on Structure	lump sum			1
Steel Intermediate Diaphragm for P/S Concrete Girders	each		12	12
Slab Drain	each		44	44
Vertical Drain at End Bents	each			2
Plain Neoprene Bearing Pad	each		6	6
Laminated Neoprene Bearing Pad	each		12	12

All concrete above the construction joint in the end bents is included in the Estimated Quantities for Slab on Concrete NU-Girder.

All reinforcement in the end bents is included in the Estimated Quantities for Slab on Concrete NU-Girder.

All reinforcement in the intermediate bent concrete diaphragms except reinforcement embedded in the beam cap is included in the Estimated Quantities for Slab on Concrete NU-Girder.

All concrete above the intermediate beam cap is included in the Estimated Quantities for Slab on Concrete NU-Girder.

Foundation Data

Type	Design Data		Bent Number 1	2	3	4
Load Bearing Pile	Pile Type and Size		HP 12x53	---	---	HP 12x53
	Number	ea	6	---	---	6
	Approximate Length Per Each	ft	27	---	---	17
	Pile Point Reinforcement	ea	All	---	---	All
	Min. Galvanized Penetration (Elev.)	ft	Full Length	---	---	Full Length
	Pile Driving Verification Method		DF	---	---	DF
	Resistance Factor		0.40	---	---	0.40
	Minimum Nominal Axial Compressive Resistance	kip	590	---	---	590
Rock Socket	Number	ea	---	2	2	---
	Foundation Material		---	Rock	Rock	---
	Elevation Range	ft	---	897-874	899-874	---
	Minimum Nominal Axial Compressive Resistance (Side Resistance)	ksf	---	27.9	27.9	---
	Minimum Nominal Axial Compressive Resistance (Tip Resistance)	ksf	---	263	263	---

DF = FHWA-modified Gates Dynamic Pile Formula

$$\text{Minimum Nominal Axial Compressive Resistance} = \frac{\text{Maximum Factored Loads}}{\text{Resistance Factor}}$$

$$\text{Minimum Nominal Axial Compressive Resistance (Side Resistance + Tip Resistance)} = \frac{\text{Maximum Factored Loads}}{\text{Resistance Factors}}$$

Manufactured pile point reinforcement shall be used on all piles in this structure.

Pile point reinforcement need not be galvanized. Shop drawings will not be required for pile point reinforcement.

Prebore for piles at Bent No. 4 to elevation 911.0.

Sonic logging testing shall be performed on all drilled shafts and rock sockets.

General Notes

Design Specifications:

2020 AASHTO LRFD Bridge Design Specifications (9th Ed.)
Seismic Design Catergory = A

Design Loading:

Vehicular = HL-93
Future Wearing Surface = 35 lb/sf
Earth = 120 lb/cf
Equilvalent Fluid Pressure = 45 lb/cf
Superstructure: Simply-Supported, Non-composite for dead load
Continous Composite for live load.

Design Unit Stresses:

Class B Concrete (Substructure)	f'c = 3,000 psi
Class B-2 Concrete (Drilled Shafts & Rock Sockets)	f'c = 4,000 psi
Class B-1 Concrete (Barrier)	f'c = 4,000 psi
Class B-2 Concrete (Superstructure, except Prestressed Girders and Barrier)	f'c = 4,000 psi
Reinforcing Steel (Grade 60)	fy = 60,000 psi
Structural Steel HP Pile (ASTM A709 Grade 50S)	fy = 50,000 psi

For precast prestressed panel stresses, see Sheet No. 21.

For prestressed girder stresses, see Sheets No. 14 thru 17.

Neoprene Pads:

Neoprene bearing pads shall be 60 durometer and shall be in accordance with Sec 716.

Joint Filler:

All joint filler shall be in accordance with Sec 1057 for preformed sponge rubber expannsion and partition joint filler, except as noted.

Reinforcing Steel:

Minimum clearance to reinforcing steel shall be 1 1/2", unless otherwise shown.

Traffic Handling:

Structure to be closed during construction. Traffic to be maintained on other routes during construction. See roadway plans for traffic control.

Miscellaneous:

MoDOT Construction personnel will indicate the type of joint filler option used under the precast panels for this structure:

☐ Constant Joint Filler
☐ Variable Joint Filler

Hydrologic Data

Drainage Area = 166 mi²
Design Flood Frequency = 50 years
Design Flood Discharge = 28,300 cfs
Design Flood (D.F.) Elevation = 925.7
Base Flood (100-year)
Base Flood Elevation = 927.2
Base Flood Discharge = 33,100 cfs
Estimated Backwater = 0.1 ft
Average Velocity thru Opening = 7.7 ft/s
Freeboard (50-year)
Freeboard = 2.0 ft
Roadway Overtopping
Overtopping Flood Discharge > 44,500 cfs
Overtopping Flood Frequency > 500 years
Overtopping Flood Elevation = 931.8

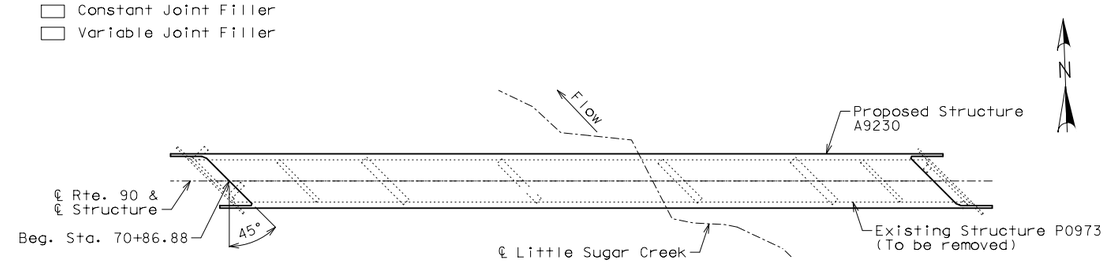

LOCATION SKETCH

Estimated Quantities for Slab on Concrete NU-Girder

Item		Total
Class B-2 Concrete	cu. yard	382.4
Reinforcing Steel (Epoxy Coated)	pound	105,390

The table of Estimated Quantities for Slab on Concrete NU-Girder represents the quantities used by the State in preparing the cost estimate for concrete slabs. The area of the concrete slab will be measured to the nearest square yard longitudinally from end of slab to end of slab and transversely from out to out of bridge slab (or with the horizontal dimensions as shown on the plan of slab). Payment for prestressed panels, conventional forms, all concrete and epoxy coated reinforcing steel will be considered completely covered by the contract unit price for the slab. Variations may be encountered in the estimated quantities but the variations cannot be used for an adjustment in the contract unit price.

Method of forming the slab shall be as shown on the plans and in accordance with Sec 703. All hardware for forming the slab to be left in place as a permanent part of the structure shall be coated in accordance with ASTM A123 or ASTM B633 with a thickness class SC 4 and a finish type I, II or III.

The Estimated Quantities for Slab on Concrete NU-Girder are based on skewed precast prestressed end panels.

Class B-2 Concrete quantity is based on minimum top flange thickness and minumim joint material thickness.

The prestressed panel quantities are not included in the table of Estimated Quantities for Slab on Concrete NU-Girder.

GENERAL NOTES AND QUANTITIES

Detailed Feb. 2023
Checked Feb. 2023

Note: This drawing is not to scale. Follow dimensions.

FOR INFORMATION ONLY NOT FOR CONSTRUCTION

DATE PREPARED 9/14/2023
ROUTE 90 | STATE MO
DISTRICT BR | SHEET NO. 2
COUNTY McDONALD
JOB NO. J7S0532
CONTRACT ID.
PROJECT NO.
BRIDGE NO. A9230

DESCRIPTION	DATE

IF A SEAL IS PRESENT ON THIS SHEET IT HAS BEEN ELECTRONICALLY SEALED AND DATED

MISSOURI HIGHWAYS AND TRANSPORTATION COMMISSION
105 WEST CAPITOL
JEFFERSON CITY, MO 65102
1-888-ASK-MODOT (1-888-275-6636)

EFK•Moen
Civil Engineering Design
13523 Barrett Parkway Dr, Suite 250
St. Louis, MO 63021
314-394-3100
Missouri Certificate of Authority: 001578

REV.

SEC/SUR 15 TWP 21N RGE 31W

(121′-125′-121′) PRESTRESSED CONCRETE NU-GIRDER SPANS

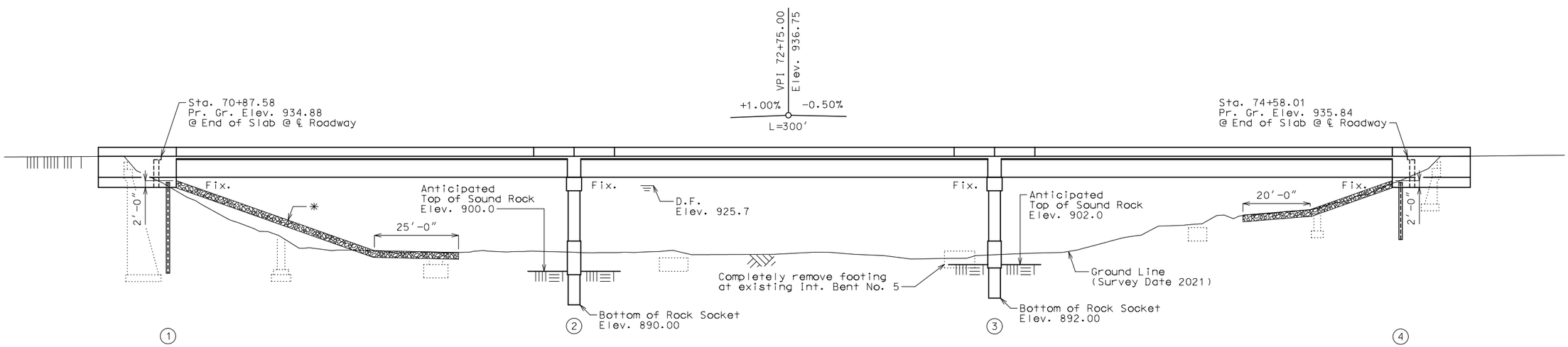

GENERAL ELEVATION

✳ 2.0:1 (H:V) Slope (Normal) 2′-0″
Type 2 Rock Blanket with
Permanent Erosion Control
Geotextile (Roadway Item)(Typ.)

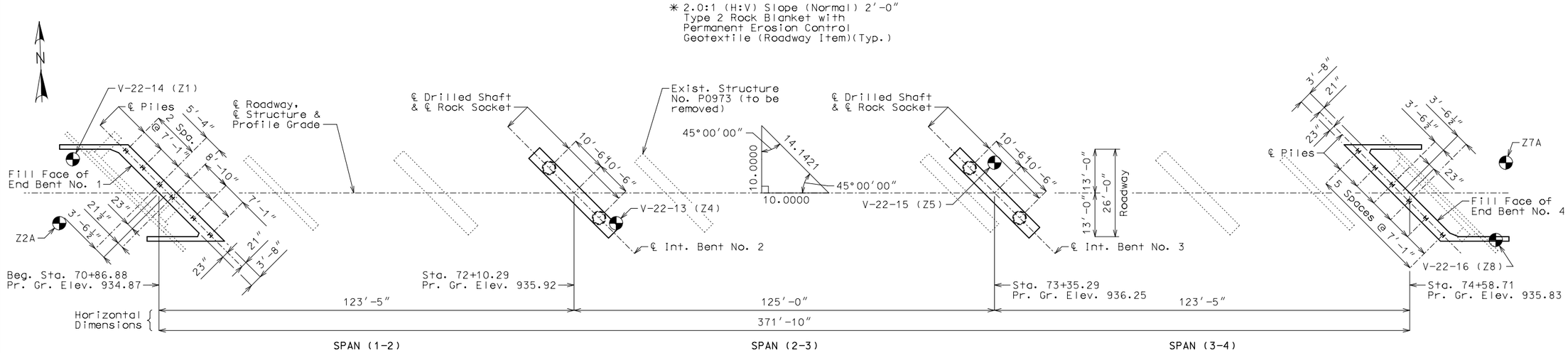

PLAN

"⊕" Indicates location of borings.

Notice and Disclaimer Regarding Boring Log Data

The locations of all subsurface borings for this structure are shown on the plan sheet(s) for this structure. The boring data for all locations indicated, as well as any other boring logs or other factual records of subsurface data and investigations performed by the department for the design of the project, are shown on Sheets No. 33 thru 42 and may be included in the Electronic Bridge Deliverables. They will also be available from the Project Contact upon written request. No greater significance or weight should be given to the boring data depicted on the plan sheets than is given to the subsurface data available from the district or elsewhere.

The Commission does not represent or warrant that any such boring data accurately depicts the conditions to be encountered in constructing this project. A contractor assumes all risks it may encounter in basing its bid prices, time or schedule of performance on the boring data depicted here or those available from the district, or on any other documentation not expressly warranted, which the contractor may obtain from the Commission.

Note:

Existing roadway fill under the ends of the bridge shall be removed as shown. Removal of existing roadway fill will be considered completely covered by the contract unit price for roadway excavation.

Roadway fill shall be completed to the final roadway section and up to the elevation of the bottom of the concrete beam within the limits of the structure and for not less than 25 feet in back of the fill face of the end bents before any piles are driven for any bents falling within the embankment section.

For General Notes, Foundation Data, Estimated Quantities, Hydrologic Data and Location Sketch, see Sheet No. 2.

BM1 - SQUARE CORNER @ NW WINGWALL
BRIDGE P0937. ELEV. 934.84

BM2 - SQUARE CORNER @ SW WINGWALL
BRIDGE P0937. ELEV. 934.84

BRIDGE: ROUTE 90 OVER LITTLE SUGAR CREEK

ROUTE 90 FROM ROUTE 71 TO ROUTE K
ABOUT 2.4 MILES EAST OF ROUTE 71
BEGINNING STATION 70+86.88

Designed Feb. 2023
Detailed Feb. 2023
Checked Feb. 2023

Note: This drawing is not to scale. Follow dimensions.

FOR INFORMATION ONLY NOT FOR CONSTRUCTION

DATE PREPARED 4/17/2023
ROUTE 90 | STATE MO
DISTRICT BR | SHEET NO. 1
COUNTY McDONALD
JOB NO. J7S0532
CONTRACT ID.
PROJECT NO.
BRIDGE NO. A9230

DESCRIPTION | DATE

IF A SEAL IS PRESENT ON THIS SHEET IT HAS BEEN ELECTRONICALLY SEALED AND DATED

MISSOURI HIGHWAYS AND TRANSPORTATION COMMISSION
105 WEST CAPITOL
JEFFERSON CITY, MO 65102
1-888-ASK-MODOT (1-888-275-6636)

EFK•Moen
Civil Engineering Design
13523 Barrett Parkway Dr. Suite 250
St. Louis, MO 63021
314-394-3100
Missouri Certificate of Authority: 001578

REV.

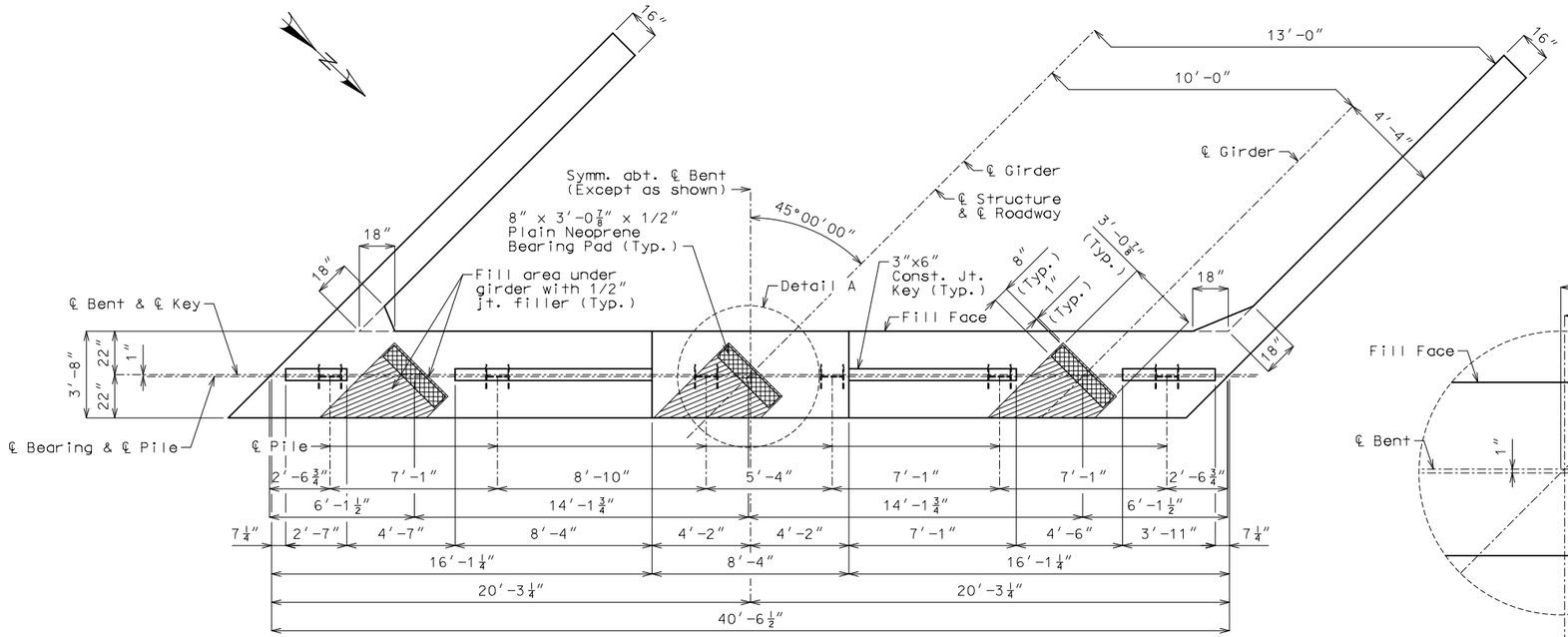

PLAN OF BEAM

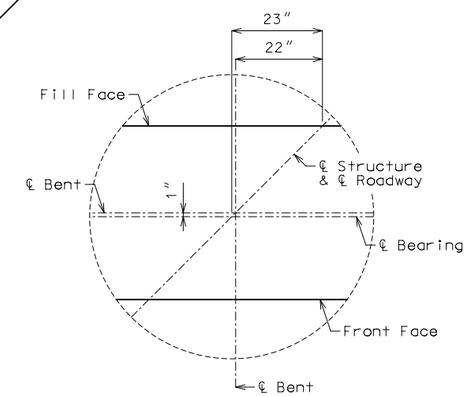

DETAIL A

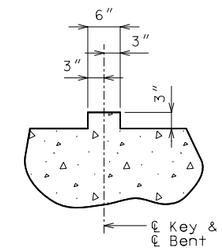

SECTION THRU KEY

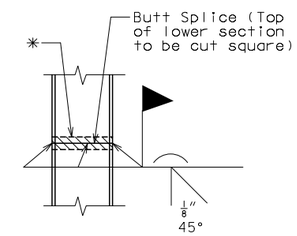

STEEL PILE SPLICE
(If required)

* Galvanizing material shall be omitted or removed one inch clear of weld locations in accordance with Sec 702.

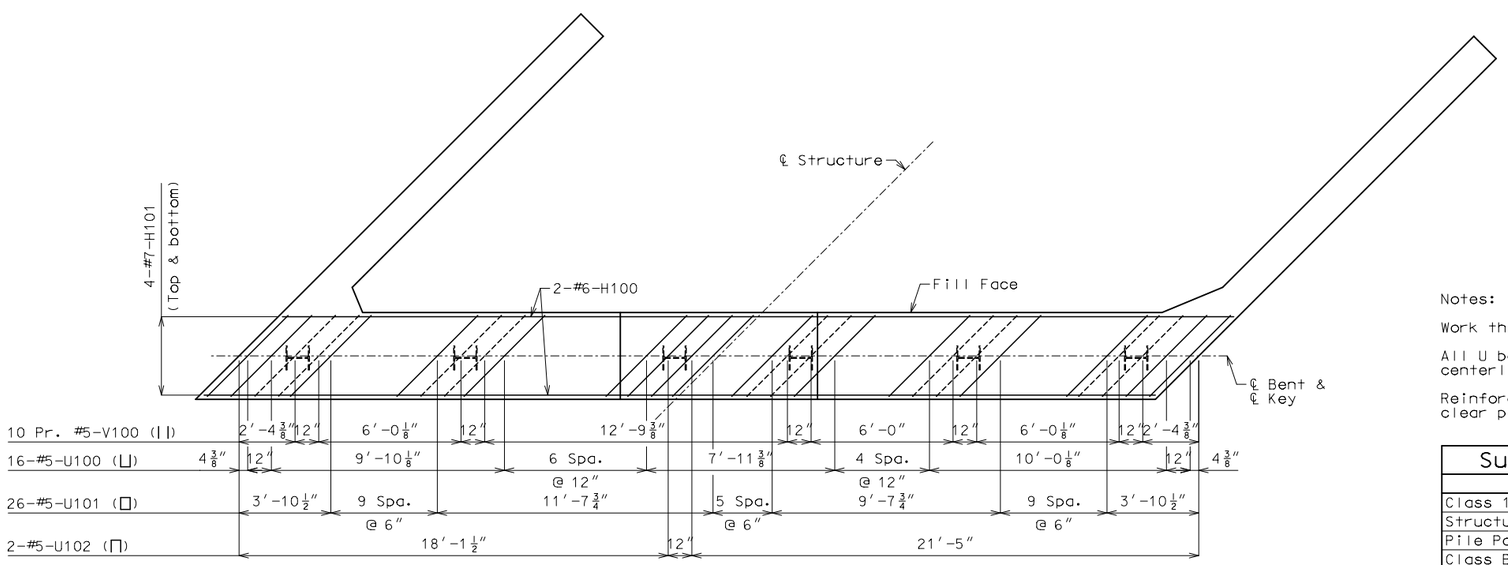

PLAN OF BEAM SHOWING REINFORCEMENT
Keys not shown for clarity.

Notes:

Work this sheet with Sheets No. 4 & 5.

All U bars and pairs of V bars shall be placed parallel to centerline of roadway.

Reinforcing steel shall be shifted to clear piles. U bars shall clear piles by at least 1 1/2 inches.

Substructure Quantity Table for Bent No. 1		
Item		Quantity
Class 1 Excavation	cu. yard	35
Structural Steel Pile (12 in.)	linear foot	162
Pile Point Reinforcement	each	6
Class B Concrete (Substructure)	cu. yard	22.6

These quantities are included in the Estimated Quantities table on Sheet No. 2.

DETAILS OF END BENT NO. 1

Detailed Feb. 2023
Checked Feb. 2023

Note: This drawing is not to scale. Follow dimensions.

FOR INFORMATION ONLY NOT FOR CONSTRUCTION

DATE PREPARED 4/17/2023
ROUTE 90 | STATE MO
DISTRICT BR | SHEET NO. 3
COUNTY McDONALD
JOB NO. J7S0532
CONTRACT ID.
PROJECT NO.
BRIDGE NO. A9230

DESCRIPTION | DATE

MISSOURI HIGHWAYS AND TRANSPORTATION COMMISSION
105 WEST CAPITOL
JEFFERSON CITY, MO 65102
1-888-ASK-MODOT (1-888-275-6636)

EFK•Moen
Civil Engineering Design
13523 Barrett Parkway Dr, Suite 250
St. Louis, MO 63021
314-394-3100
Missouri Certificate of Authority: 001578

IF A SEAL IS PRESENT ON THIS SHEET IT HAS BEEN ELECTRONICALLY SEALED AND DATED

REV.

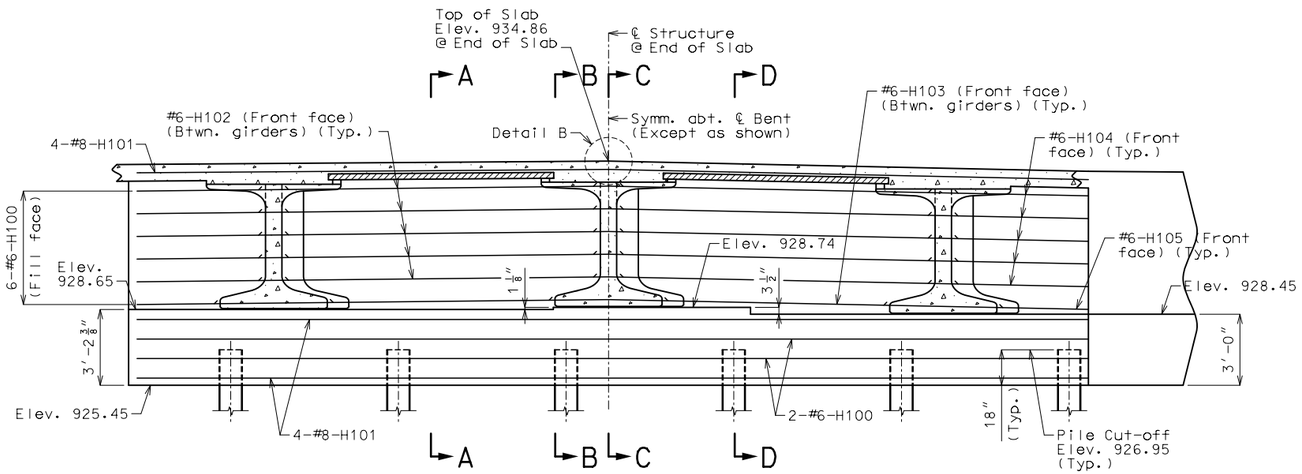

SECTION NEAR END BENT

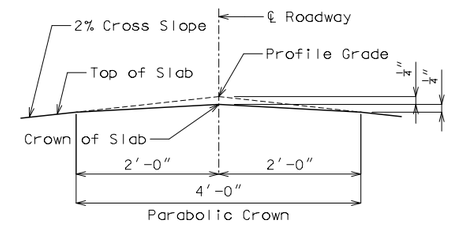

DETAIL B

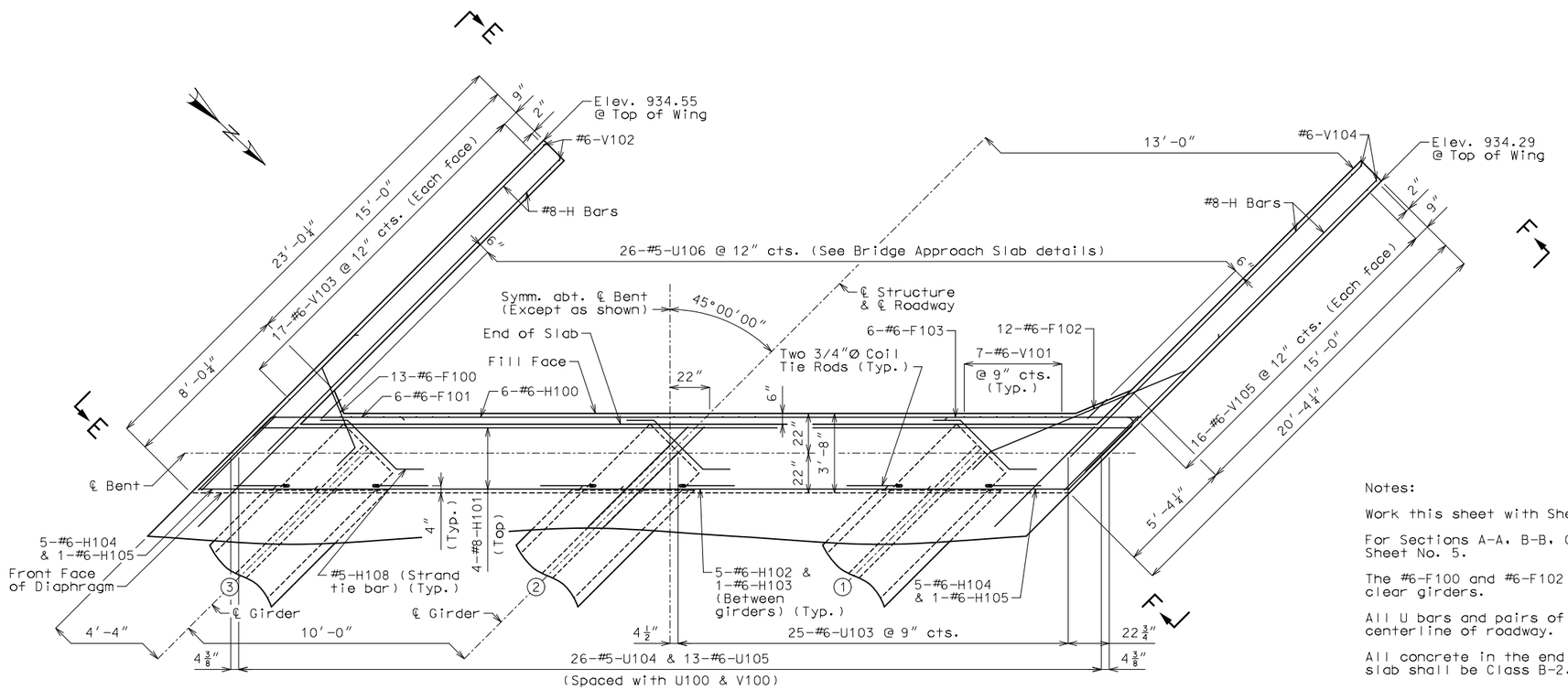

PART PLAN

Notes:

Work this sheet with Sheets No. 3 & 5.

For Sections A-A, B-B, C-C & D-D and Elevations E-E & F-F, see Sheet No. 5.

The #6-F100 and #6-F102 bars shall be bent in the field to clear girders.

All U bars and pairs of V bars shall be placed parallel to centerline of roadway.

All concrete in the end bent above top of beam and below top of slab shall be Class B-2.

Strands at end of girders shall be field bent or, if necessary, cut in field to maintain 1 1/2-inch minimum clearance to fill face of end bent.

For location of coil tie rods and #5-H108 (strand tie bar), see Sheets No. 14 & 15.

For details of vertical drain at end bents, see Sheet No. 6.

For details of bridge approach slab, see Sheet No. 29.

DETAILS OF END BENT NO. 1

Detailed Feb. 2023
Checked Feb. 2023

Note: This drawing is not to scale. Follow dimensions.

FOR INFORMATION ONLY NOT FOR CONSTRUCTION

DATE PREPARED	
4/17/2023	
ROUTE 90	STATE MO
DISTRICT BR	SHEET NO. 4
COUNTY McDONALD	
JOB NO. J7S0532	
CONTRACT ID.	
PROJECT NO.	
BRIDGE NO. A9230	

DESCRIPTION	DATE

MISSOURI HIGHWAYS AND TRANSPORTATION COMMISSION
105 WEST CAPITOL
JEFFERSON CITY, MO 65102
1-888-ASK-MODOT (1-888-275-6636)

EFK•Moen
Civil Engineering Design
13523 Barrett Parkway Dr, Suite 250
St. Louis, MO 63021
314-394-3100
Missouri Certificate of Authority: 001578

IF A SEAL IS PRESENT ON THIS SHEET IT HAS BEEN ELECTRONICALLY SEALED AND DATED

REV.

Z:\22001 MoDOT McDonald County Route 90 Bridge\DGN\Bridge\final\Plotsheets\B_A9230_004_J7S0532_End_Bent_1_2.dgn 3:25:06 PM 4/17/2023

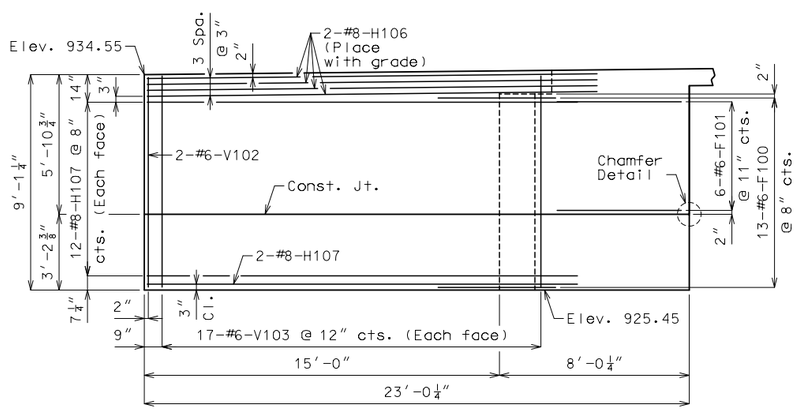

ELEVATION E-E

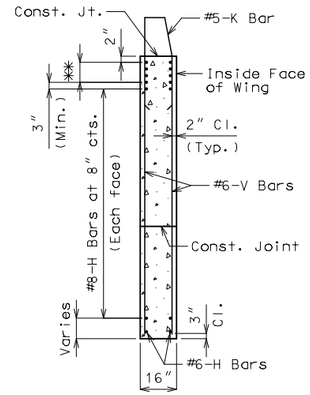

TYPICAL SECTION THRU WING

** #8-H Bars at 3" cts. (Each face)(Place with grade)

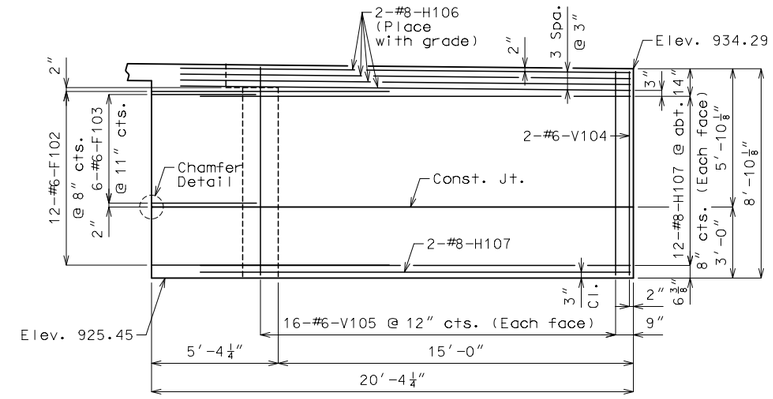

ELEVATION F-F

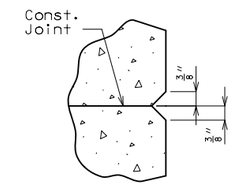

CHAMFER DETAIL

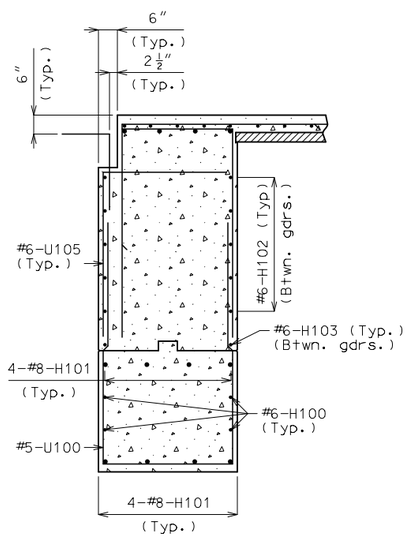

SECTION A-A

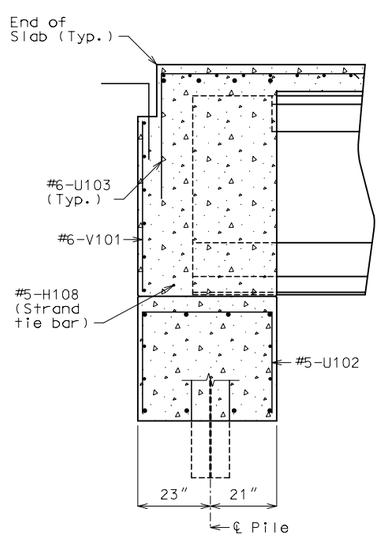

SECTION B-B

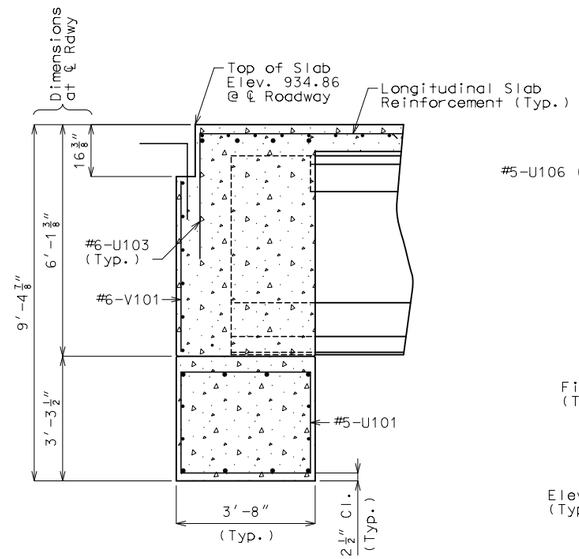

SECTION C-C

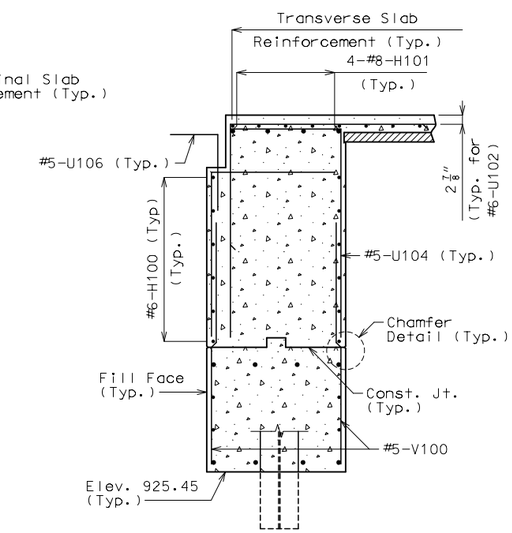

SECTION D-D

Notes:

Work this sheet with Sheets No. 3 & 4.

For location of Sections A-A, B-B, C-C & D-D and Elevations E-E & F-F, see Sheet No. 4.

For reinforcement of the barrier, see Sheet No. 28.

DETAILS OF END BENT NO. 1

Detailed Feb. 2023
Checked Feb. 2023

Note: This drawing is not to scale. Follow dimensions.

FOR INFORMATION ONLY NOT FOR CONSTRUCTION

DATE PREPARED	
4/17/2023	
ROUTE 90	STATE MO
DISTRICT BR	SHEET NO. 5
COUNTY McDONALD	
JOB NO. J7S0532	
CONTRACT ID.	
PROJECT NO.	
BRIDGE NO. A9230	

DATE	DESCRIPTION

IF A SEAL IS PRESENT ON THIS SHEET IT HAS BEEN ELECTRONICALLY SEALED AND DATED

MISSOURI HIGHWAYS AND TRANSPORTATION COMMISSION
105 WEST CAPITOL
JEFFERSON CITY, MO 65102
1-888-ASK-MODOT (1-888-275-6636)

EFK•Moen
Civil Engineering Design
13523 Barrett Parkway Dr. Suite 250
St. Louis, MO 63021
314-394-3100
Missouri Certificate of Authority: 001578

REV.

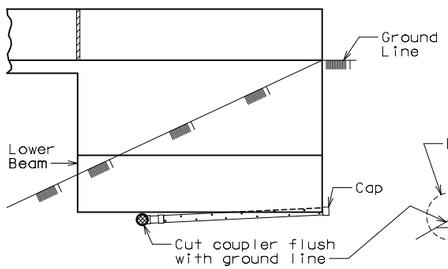

ELEVATION OF WING

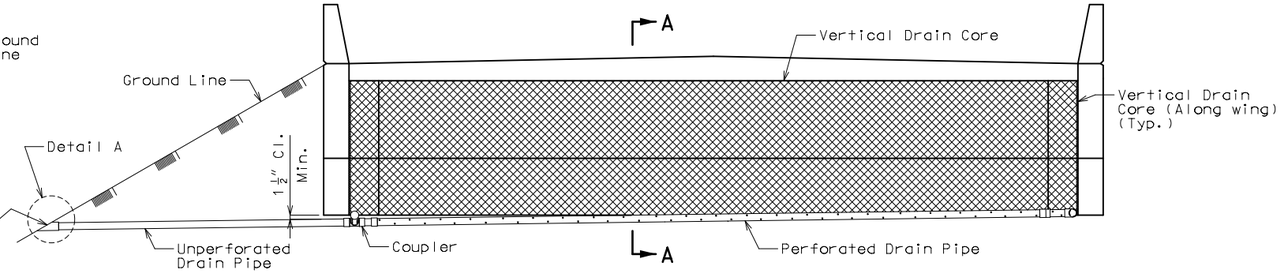

ELEVATION OF END BENT

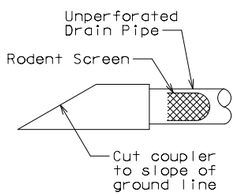

DETAIL A

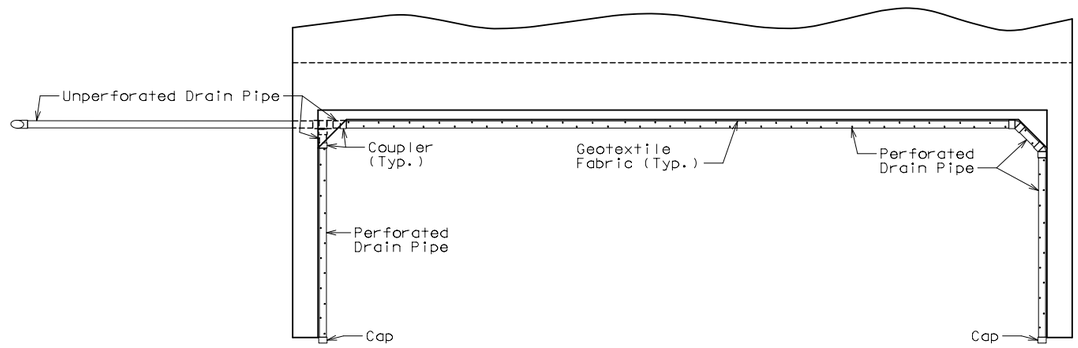

PLAN OF END BENT

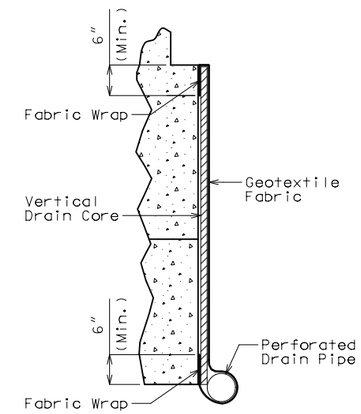

PART SECTION A-A
(Section thru wing similar)

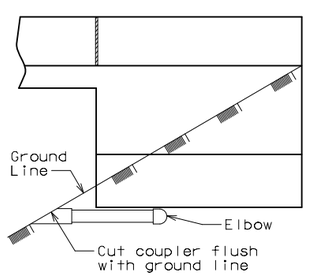

ELEVATION OF WING

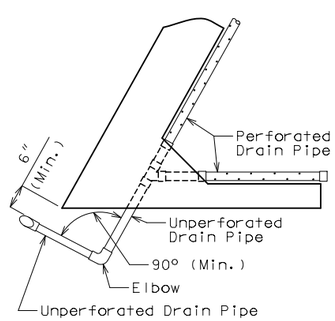

PART PLAN

OPTIONAL TURNED DRAIN
(Use only when straight drain is not practical.)

General Notes:

All drain pipe shall be sloped 1 to 2 percent.

Drain pipe may be either 6-inch diameter corrugated metallic-coated steel pipe underdrain, 4-inch diameter corrugated polyvinyl chloride (PVC) drain pipe, or 4-inch diameter corrugated polyethylene (PE) drain pipe.

Drain pipe shall be placed at fill face of end bent and inside face of wings. The pipe shall slope to lowest grade of ground line, also missing the lower beam of end bent by a minimum of 1 1/2 inches.

Perforated pipe shall be placed at fill face side and inside face of wings at the bottom of end bent and plain pipe shall be used where the vertical drain ends to the exit at ground line.

VERTICAL DRAIN AT END BENTS
(Squared end bent shown, skewed end bent similar)

Detailed Feb. 2023
Checked Feb. 2023

Note: This drawing is not to scale. Follow dimensions.

FOR INFORMATION ONLY NOT FOR CONSTRUCTION

DATE PREPARED	
4/17/2023	
ROUTE 90	STATE MO
DISTRICT BR	SHEET NO. 6
COUNTY McDONALD	
JOB NO. J7S0532	
CONTRACT ID.	
PROJECT NO.	
BRIDGE NO. A9230	

DATE	DESCRIPTION

MISSOURI HIGHWAYS AND TRANSPORTATION COMMISSION
105 WEST CAPITOL
JEFFERSON CITY, MO 65102
1-888-ASK-MODOT (1-888-275-6636)

EFK•Moen
Civil Engineering Design
13523 Barrett Parkway Dr. Suite 250
St. Louis, MO 63021
314-394-3100
Missouri Certificate of Authority: 001578

IF A SEAL IS PRESENT ON THIS SHEET IT HAS BEEN ELECTRONICALLY SEALED AND DATED

REV.

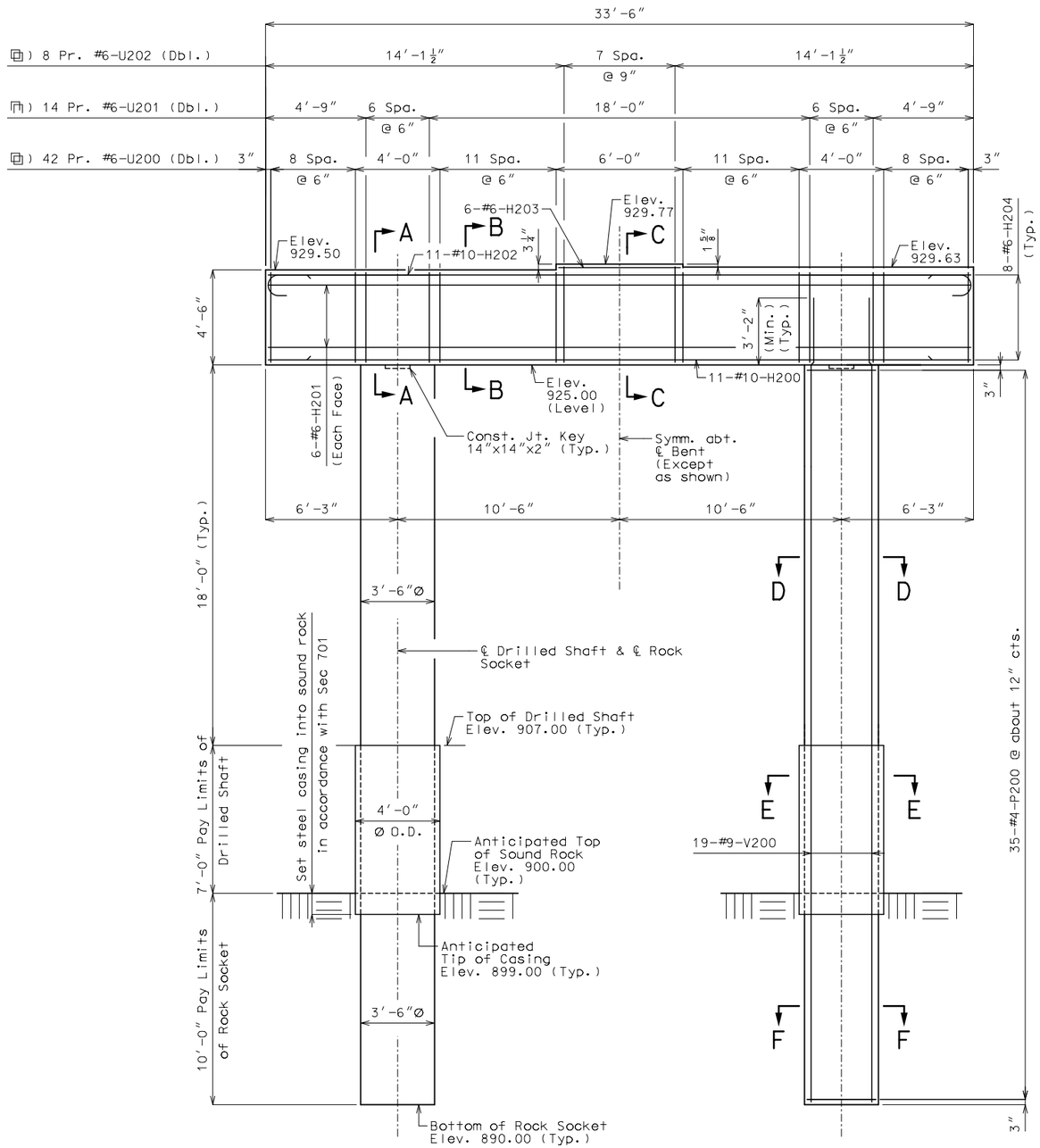

ELEVATION

Note: Beam keys not shown for clarity.

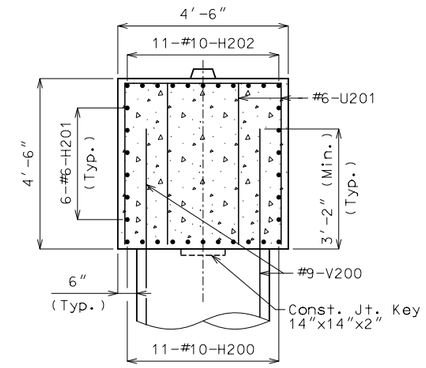

SECTION A-A

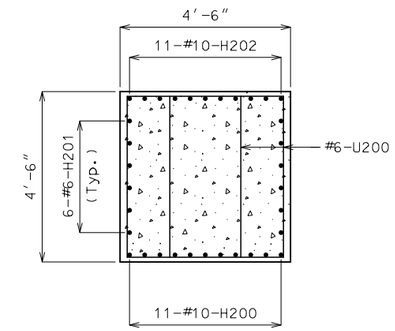

SECTION B-B

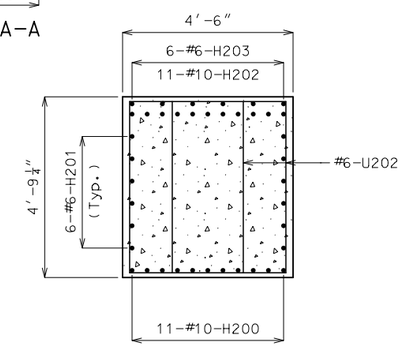

SECTION C-C

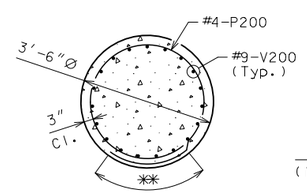

SECTION D-D

✱✱ Minimum Lap 2'-5" (Stagger adjacent bar splices)

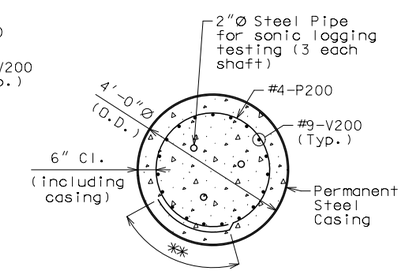

SECTION E-E

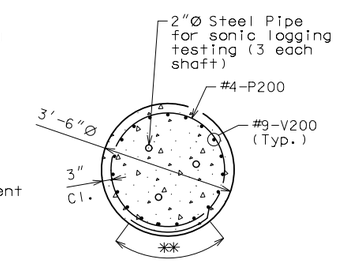

SECTION F-F

Notes:

An additional 4 feet has been added to V-bar lengths and an additional 8-#4-P200-bars have been added in the quantities, if required, for possible change in drilled shaft or rock socket lengths. The additional V-bar length shall be cut off if not required. The additional P-bars shall be spaced similarly to that shown in elevation, if required, or to a lesser spacing if not required, but not less than 6" cts.

Sonic logging testing shall be performed on all drilled shafts and rock sockets.

Thickness of permanent steel casing shall be in accordance with Sec 701.

The cost of any required excavation to the top of the drilled shafts will be considered completely covered by the contract unit price for other items.

The tip of casing shall not extend into the rock socket elevation range reported in the Foundation Data table without approval by the engineer.

Work this sheet with Sheet No. 8.

DETAILS OF INTERMEDIATE BENT NO. 2

Detailed Feb. 2023
Checked Feb. 2023

Note: This drawing is not to scale. Follow dimensions.

FOR INFORMATION ONLY NOT FOR CONSTRUCTION

DATE PREPARED	
4/17/2023	
ROUTE 90	STATE MO
DISTRICT BR	SHEET NO. 7
COUNTY McDONALD	
JOB NO. J7S0532	
CONTRACT ID.	
PROJECT NO.	
BRIDGE NO. A9230	

DESCRIPTION

DATE

MISSOURI HIGHWAYS AND TRANSPORTATION COMMISSION

105 WEST CAPITOL
JEFFERSON CITY, MO 65102
1-888-ASK-MODOT (1-888-275-6636)

EFK•Moen
Civil Engineering Design
13523 Barrett Parkway Dr, Suite 250
St. Louis, MO 63021
314-394-3100
Missouri Certificate of Authority: 001578

IF A SEAL IS PRESENT ON THIS SHEET IT HAS BEEN ELECTRONICALLY SEALED AND DATED

REV.

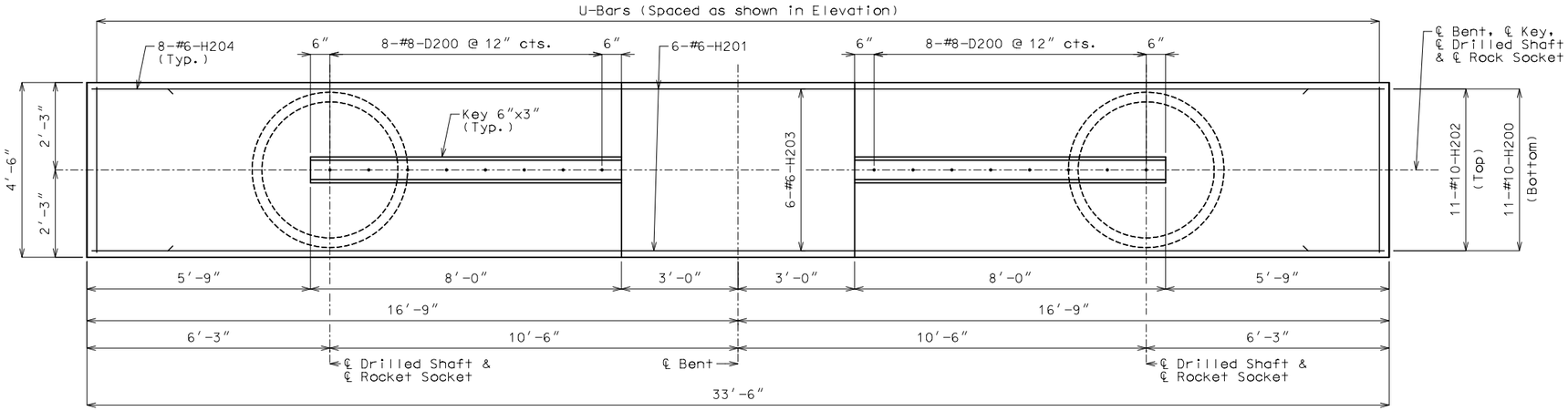

PLAN SHOWING REINFORCEMENT

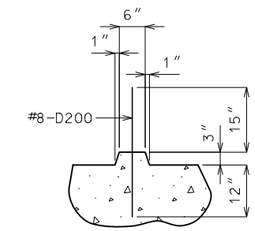

SECTION THRU KEY

Substructure Quantity Table for Intermediate Bent No. 2		
Item		Quantity
Drilled Shafts (4 ft. 0 in. Diameter)	linear foot	14.0
Rock Sockets (3 ft. 6 in. Diameter)	linear foot	20.0
Video Camera Inspection	each	2
Foundation Inspection Holes	linear foot	40.0
Sonic Logging Testing	each	2
Class B Concrete (Substructure)	cu. yard	38.2
Reinforcing Steel (Bridges)	pounds	13,007

These quantities are included in the estimated quantities table on Sheet No. 2.

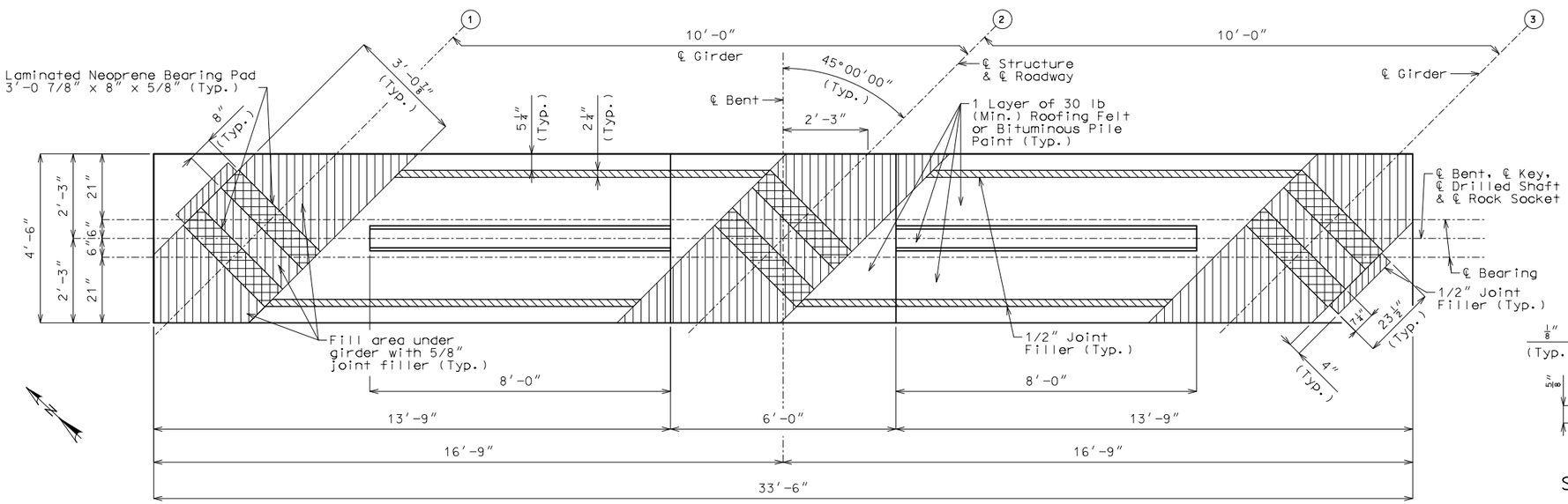

PLAN OF BEAM

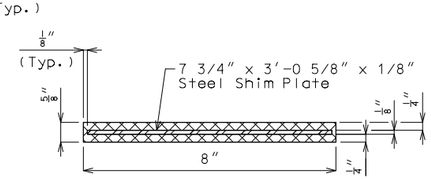

SECTION THRU LAMINATED NEOPRENE BEARING PAD

Notes:

For steps 2" or more, use 2 1/4" x 1/2" joint filler up the vertical face.

Work this sheet with Sheet No. 7.

DETAILS OF INTERMEDIATE BENT NO. 2

Detailed Feb. 2023
Checked Feb. 2023

Note: This drawing is not to scale. Follow dimensions.

FOR INFORMATION ONLY NOT FOR CONSTRUCTION

DATE PREPARED	
4/17/2023	
ROUTE 90	STATE MO
DISTRICT BR	SHEET NO. 8
COUNTY McDONALD	
JOB NO. J7S0532	
CONTRACT ID.	
PROJECT NO.	
BRIDGE NO. A9230	

DESCRIPTION	DATE

MISSOURI HIGHWAYS AND TRANSPORTATION COMMISSION
105 WEST CAPITOL
JEFFERSON CITY, MO 65102
1-888-ASK-MODOT (1-888-275-6636)

EFK•Moen
Civil Engineering Design
13523 Barrett Parkway Dr. Suite 250
St. Louis, MO 63021
314-394-3100
Missouri Certificate of Authority: 001578

IF A SEAL IS PRESENT ON THIS SHEET IT HAS BEEN ELECTRONICALLY SEALED AND DATED

REV.

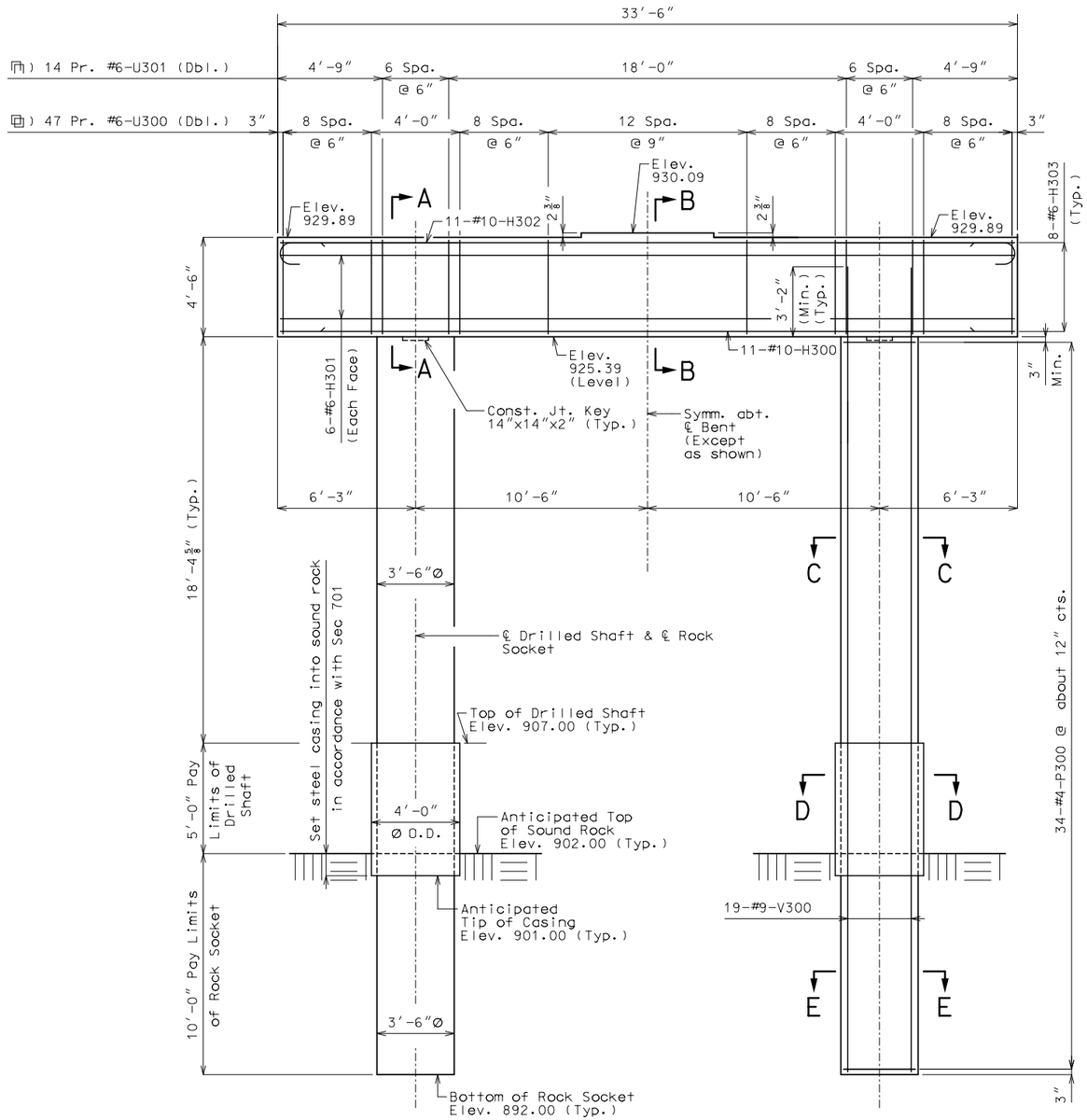

ELEVATION

Note: Beam keys not shown for clarity.

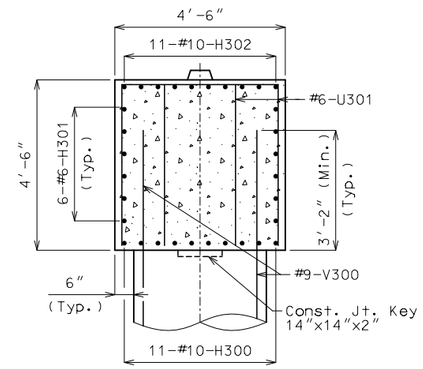

SECTION A-A

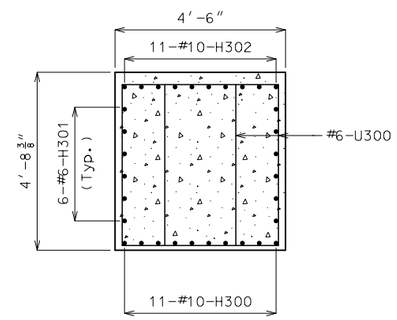

SECTION B-B

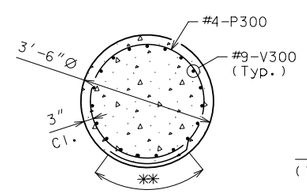

SECTION C-C

✱✱ Minimum Lap 2'-5" (Stagger adjacent bar splices)

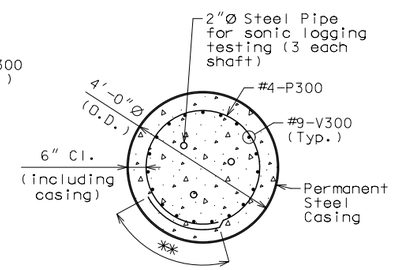

SECTION D-D

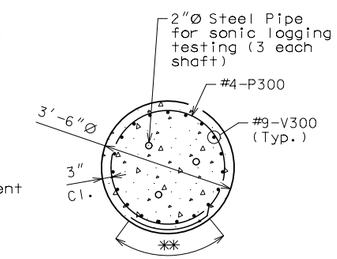

SECTION E-E

Notes:

An additional 4 feet has been added to V-bar lengths and an additional 8-#4-P300-bars have been added in the quantities, if required, for possible change in drilled shaft or rock socket lengths. The additional V-bar length shall be cut off if not required. The additional P-bars shall be spaced similarly to that shown in elevation, if required, or to a lesser spacing if not required, but not less than 6" cts.

Sonic logging testing shall be performed on all drilled shafts and rock sockets.

Thickness of permanent steel casing shall be in accordance with Sec 701.

The cost of any required excavation to the top of the drilled shafts will be considered completely covered by the contract unit price for other items.

The tip of casing shall not extend into the rock socket elevation range reported in the Foundation Data Table without approval by the engineer.

Work this sheet with Sheet No. 10.

DETAILS OF INTERMEDIATE BENT NO. 3

Note: This drawing is not to scale. Follow dimensions.

Detailed Feb. 2023
Checked Feb. 2023

FOR INFORMATION ONLY NOT FOR CONSTRUCTION

DATE PREPARED	4/17/2023
ROUTE	90
STATE	MO
DISTRICT	BR
SHEET NO.	9
COUNTY	McDONALD
JOB NO.	J7S0532
CONTRACT ID.	
PROJECT NO.	
BRIDGE NO.	A9230

DESCRIPTION

DATE

MISSOURI HIGHWAYS AND TRANSPORTATION COMMISSION
105 WEST CAPITOL
JEFFERSON CITY, MO 65102
1-888-ASK-MODOT (1-888-275-6636)

EFK•Moen
Civil Engineering Design
13523 Barrett Parkway Dr, Suite 250
St. Louis, MO 63021
314-394-3100
Missouri Certificate of Authority: 001578

IF A SEAL IS PRESENT ON THIS SHEET IT HAS BEEN ELECTRONICALLY SEALED AND DATED

REV.

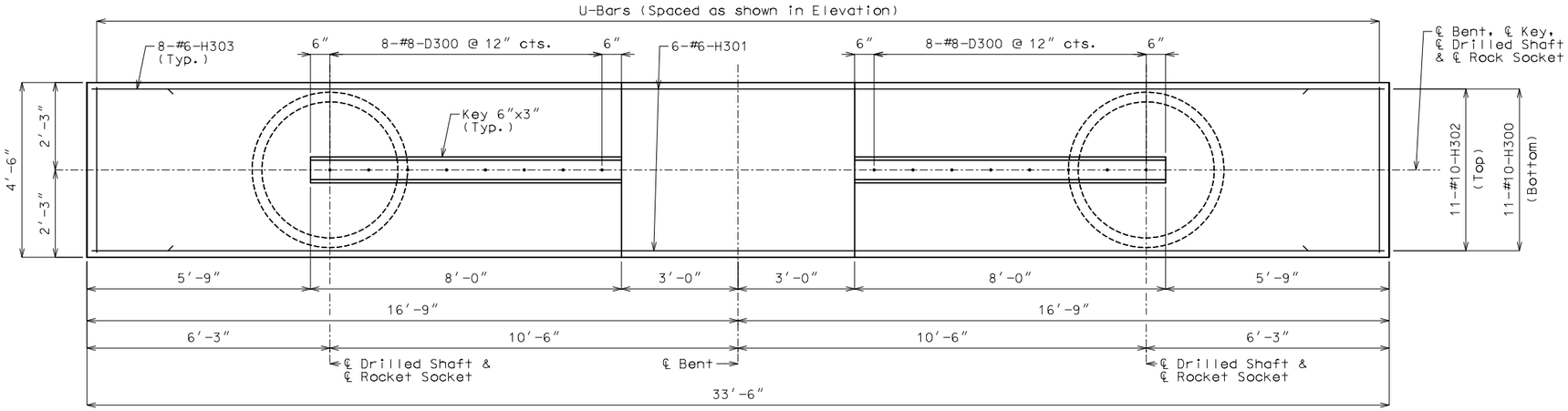

PLAN SHOWING REINFORCEMENT

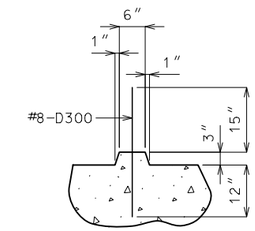

SECTION THRU KEY

Substructure Quantity Table for Intermediate Bent No. 3		
Item		Quantity
Drilled Shafts (4 ft. 0 in. Diameter)	linear foot	10.0
Rock Sockets (3 ft. 6 in. Diameter)	linear foot	20.0
Video Camera Inspection	each	2
Foundation Inspection Holes	linear foot	40.0
Sonic Logging Testing	each	2
Class B Concrete (Substructure)	cu. yard	38.5
Reinforcing Steel (Bridges)	pounds	12,571

These quantities are included in the estimated quantities table on Sheet No. 2.

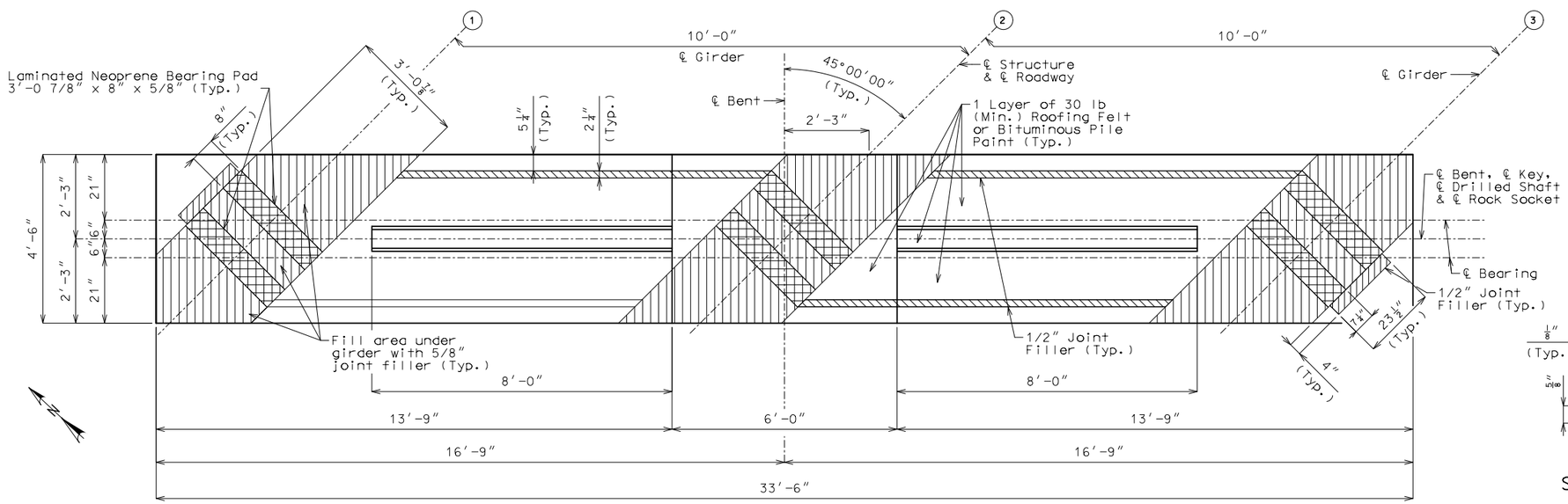

PLAN OF BEAM

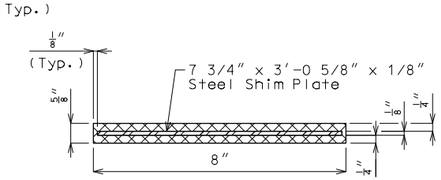

SECTION THRU LAMINATED NEOPRENE BEARING PAD

Notes:

For steps 2" or more, use $2\frac{1}{4}$"x$\frac{1}{2}$" joint filler up the vertical face.

Work this sheet with Sheet No. 9.

DETAILS OF INTERMEDIATE BENT NO. 3

Detailed Feb. 2023
Checked Feb. 2023

Note: This drawing is not to scale. Follow dimensions.

FOR INFORMATION ONLY NOT FOR CONSTRUCTION

DATE PREPARED	
4/17/2023	
ROUTE 90	STATE MO
DISTRICT BR	SHEET NO. 10
COUNTY McDONALD	
JOB NO. J7S0532	
CONTRACT ID.	
PROJECT NO.	
BRIDGE NO. A9230	

DESCRIPTION	DATE

MISSOURI HIGHWAYS AND TRANSPORTATION COMMISSION
105 WEST CAPITOL
JEFFERSON CITY, MO 65102
1-888-ASK-MODOT (1-888-275-6636)

EFK•Moen
Civil Engineering Design
13523 Barrett Parkway Dr. Suite 250
St. Louis, MO 63021
314-394-3100
Missouri Certificate of Authority: 001578

IF A SEAL IS PRESENT ON THIS SHEET IT HAS BEEN ELECTRONICALLY SEALED AND DATED

REV.

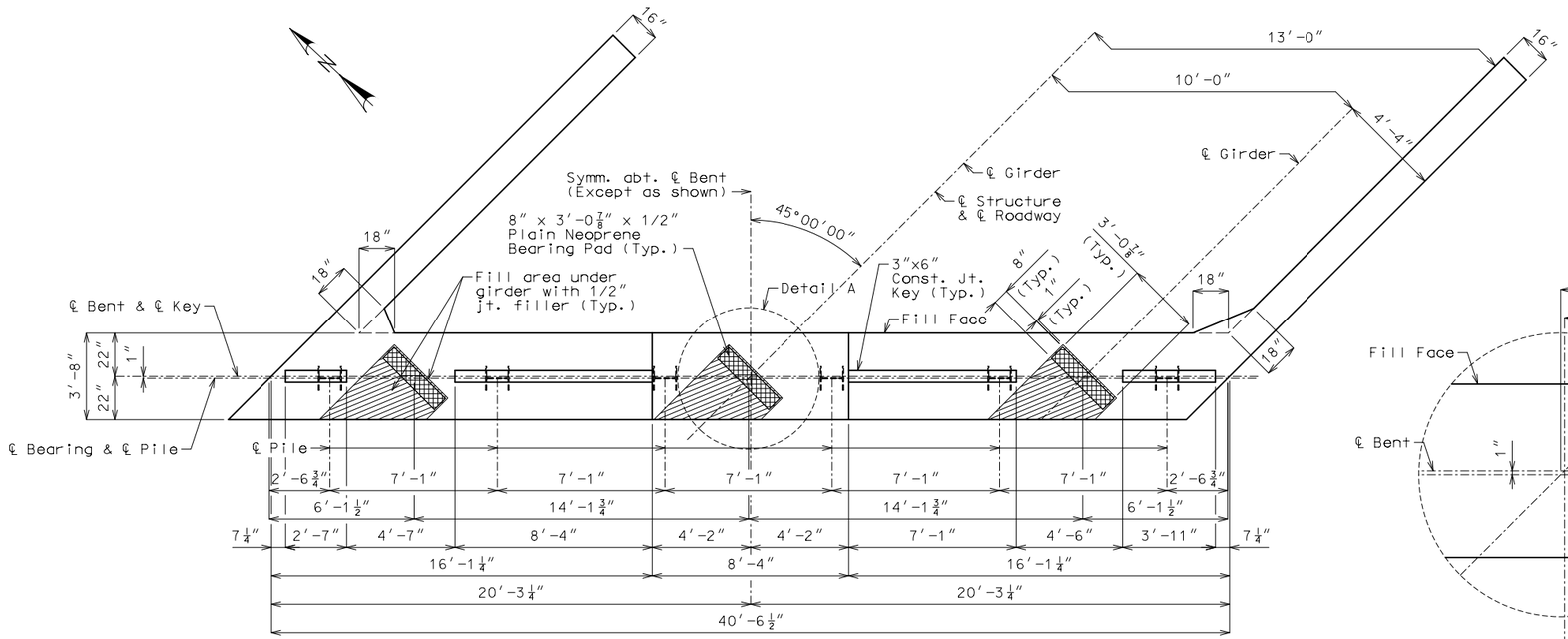

PLAN OF BEAM

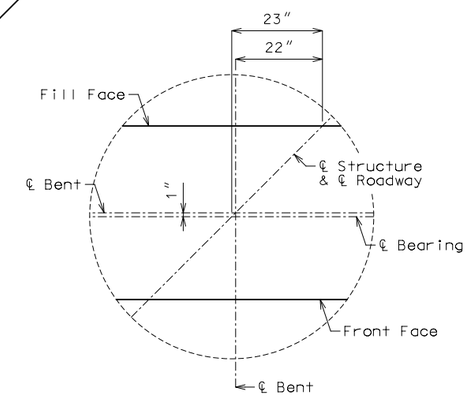

DETAIL A

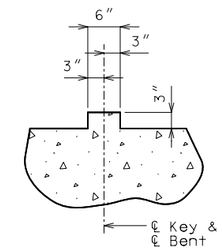

SECTION THRU KEY

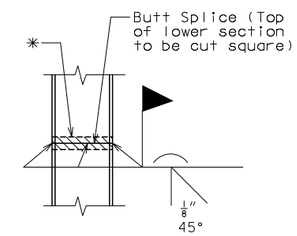

STEEL PILE SPLICE
(If required)

* Galvanizing material shall be omitted or removed one inch clear of weld locations in accordance with Sec 702.

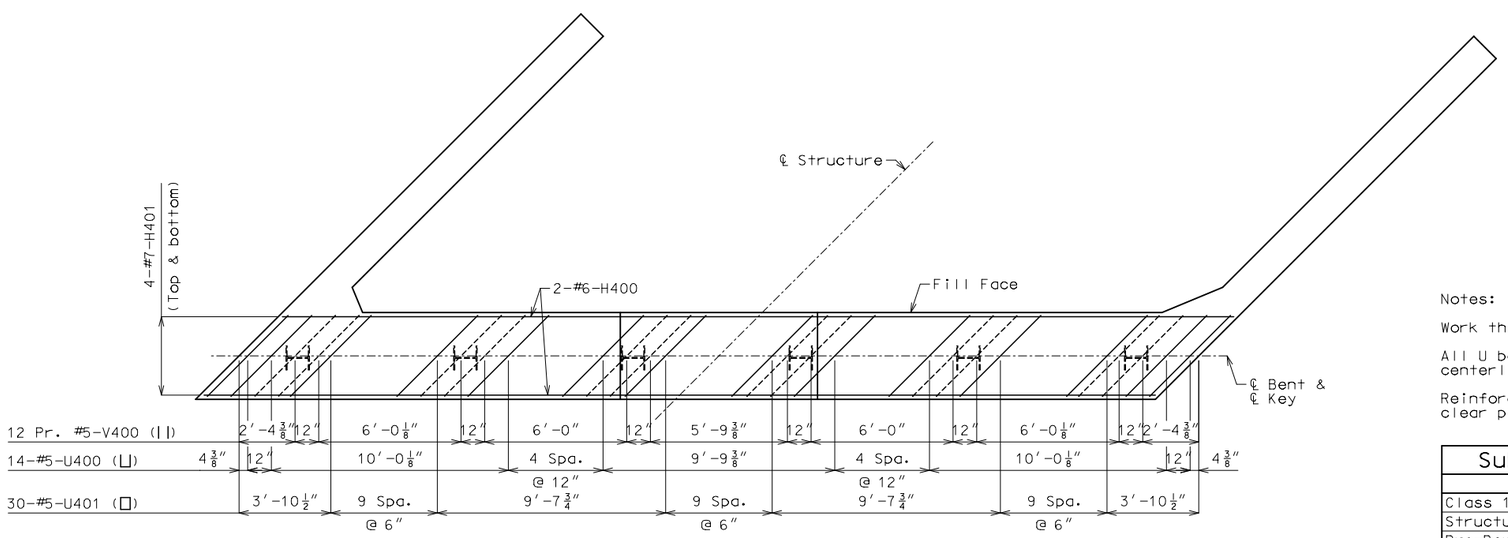

PLAN OF BEAM SHOWING REINFORCEMENT
Keys not shown for clarity.

Notes:

Work this sheet with Sheets No. 12 & 13.

All U bars and pairs of V bars shall be placed parallel to centerline of roadway.

Reinforcing steel shall be shifted to clear piles. U bars shall clear piles by at least 1 1/2 inches.

Substructure Quantity Table for Bent No. 4		
Item		Quantity
Class 1 Excavation	cu. yard	35
Structural Steel Pile (12 in.)	linear foot	102
Pre-Bore for Piling	linear foot	90
Pile Point Reinforcement	each	6
Class B Concrete (Substructure)	cu. yard	22.2

These quantities are included in the Estimated Quantities table on Sheet No. 2.

DETAILS OF END BENT NO. 4

Detailed Feb. 2023
Checked Feb. 2023

Note: This drawing is not to scale. Follow dimensions.

FOR INFORMATION ONLY NOT FOR CONSTRUCTION

DATE PREPARED	
4/17/2023	
ROUTE 90	STATE MO
DISTRICT BR	SHEET NO. 11
COUNTY McDONALD	
JOB NO. J7S0532	
CONTRACT ID.	
PROJECT NO.	
BRIDGE NO. A9230	

DESCRIPTION	DATE

MISSOURI HIGHWAYS AND TRANSPORTATION COMMISSION
105 WEST CAPITOL
JEFFERSON CITY, MO 65102
1-888-ASK-MODOT (1-888-275-6636)

EFK•Moen
Civil Engineering Design
13523 Barrett Parkway Dr, Suite 250
St. Louis, MO 63021
314-394-3100
Missouri Certificate of Authority: 001578

IF A SEAL IS PRESENT ON THIS SHEET IT HAS BEEN ELECTRONICALLY SEALED AND DATED

REV.

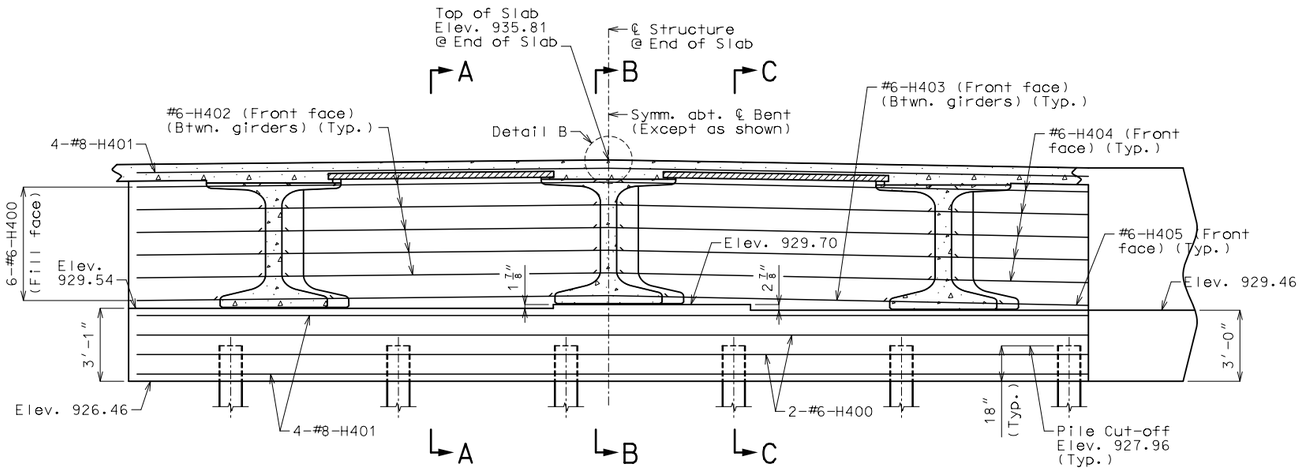

SECTION NEAR END BENT

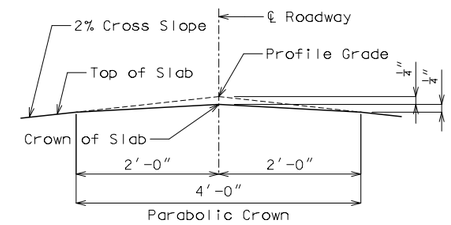

DETAIL B

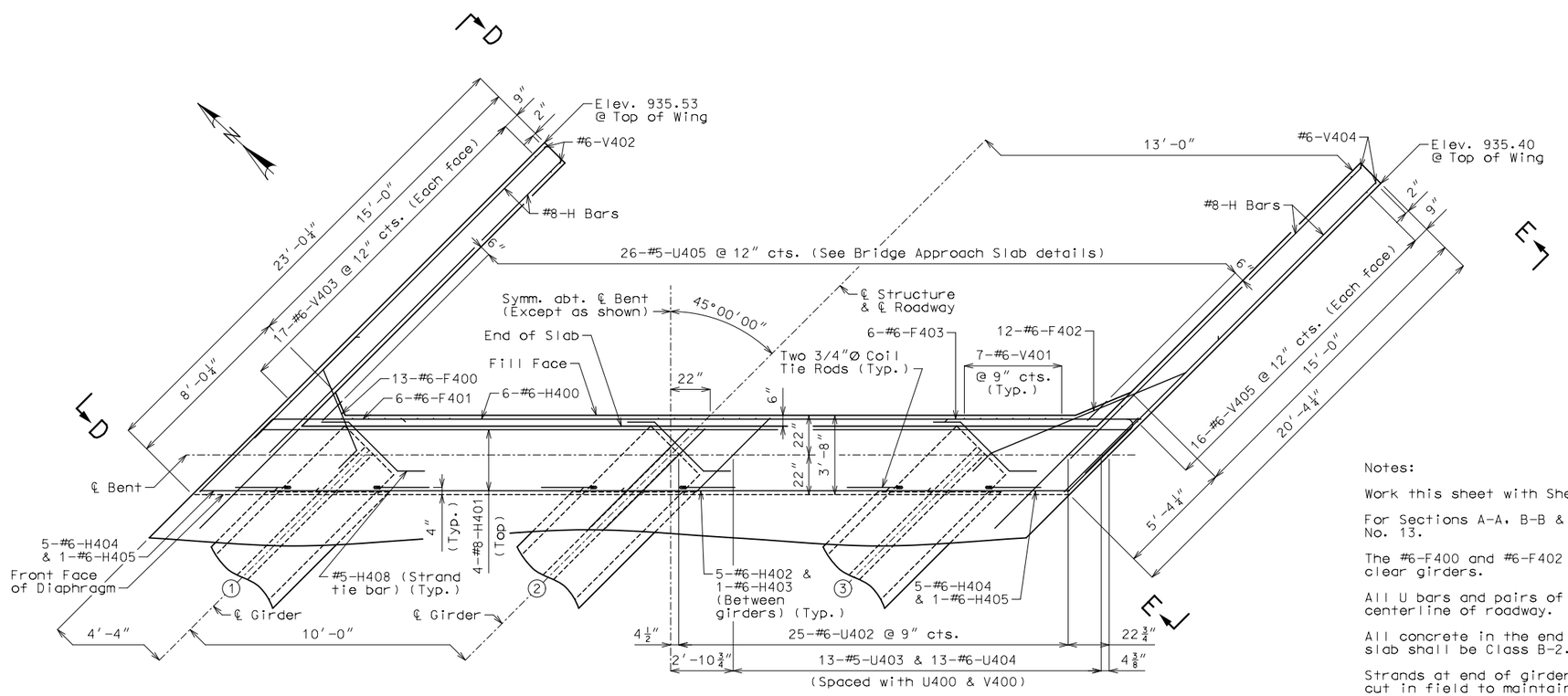

PART PLAN

Notes:

Work this sheet with Sheets No. 11 & 13.

For Sections A-A, B-B & C-C and Elevations D-D & E-E, see Sheet No. 13.

The #6-F400 and #6-F402 bars shall be bent in the field to clear girders.

All U bars and pairs of V bars shall be placed parallel to centerline of roadway.

All concrete in the end bent above top of beam and below top of slab shall be Class B-2.

Strands at end of girders shall be field bent or, if necessary, cut in field to maintain 1 1/2-inch minimum clearance to fill face of end bent.

For location of coil tie rods and #5-H408 (strand tie bar), see Sheets No. 14 & 15.

For details of vertical drain at end bents, see Sheet No. 6.

For details of bridge approach slab, see Sheet No. 29.

DETAILS OF END BENT NO. 4

Detailed Feb. 2023
Checked Feb. 2023

Note: This drawing is not to scale. Follow dimensions.

FOR INFORMATION ONLY NOT FOR CONSTRUCTION

DATE PREPARED	4/17/2023
ROUTE	90
STATE	MO
DISTRICT	BR
SHEET NO.	12
COUNTY	McDONALD
JOB NO.	J7S0532
CONTRACT ID.	
PROJECT NO.	
BRIDGE NO.	A9230

DATE	DESCRIPTION

IF A SEAL IS PRESENT ON THIS SHEET IT HAS BEEN ELECTRONICALLY SEALED AND DATED

MISSOURI HIGHWAYS AND TRANSPORTATION COMMISSION
105 WEST CAPITOL
JEFFERSON CITY, MO 65102
1-888-ASK-MODOT (1-888-275-6636)

EFK•Moen
Civil Engineering Design
13523 Barrett Parkway Dr, Suite 250
St. Louis, MO 63021
314-394-3100
Missouri Certificate of Authority: 001578

REV.

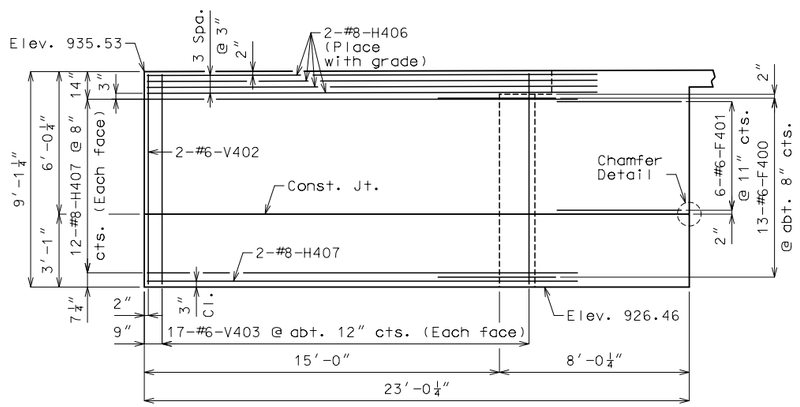

ELEVATION D-D

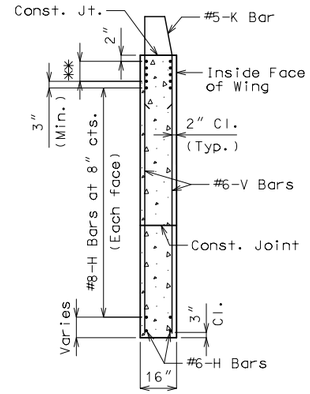

TYPICAL SECTION THRU WING

✻✻ #8-H Bars at 3" cts. (Each face)(Place with grade)

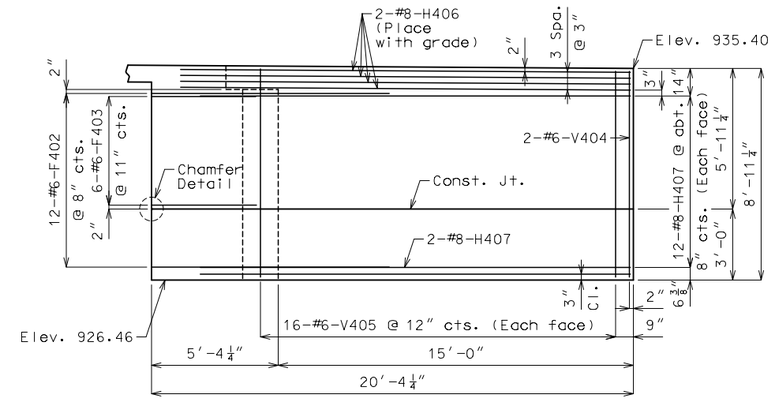

ELEVATION E-E

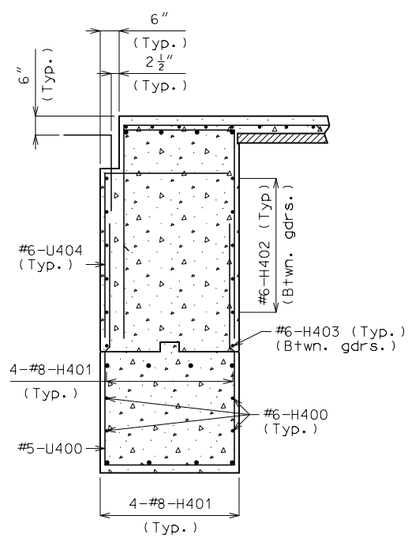

SECTION A-A

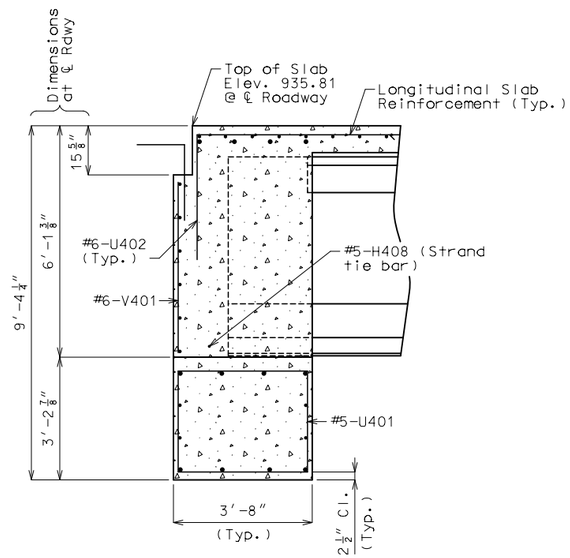

SECTION B-B

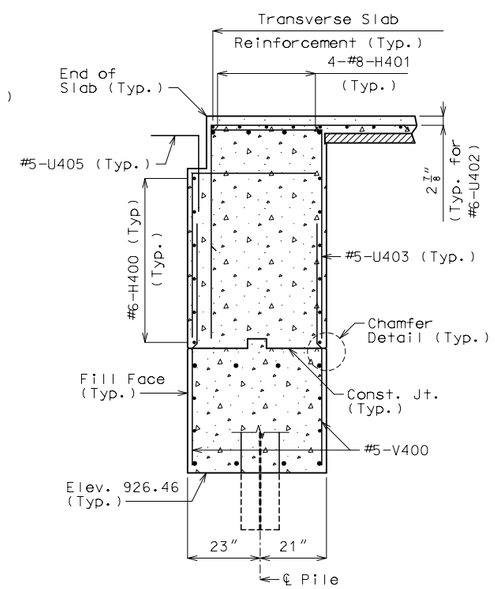

SECTION C-C

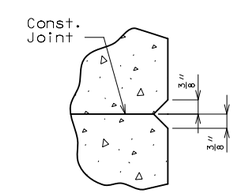

CHAMFER DETAIL

Notes:

Work this sheet with Sheets No. 11 & 12.

For location of Sections A-A, B-B & C-C and Elevations D-D & E-E, see Sheet No. 12.

For reinforcement of the barrier, see Sheet No. 28.

DETAILS OF END BENT NO. 4

Detailed Feb. 2023
Checked Feb. 2023

Note: This drawing is not to scale. Follow dimensions.

FOR INFORMATION ONLY NOT FOR CONSTRUCTION

DATE PREPARED	
4/17/2023	
ROUTE 90	STATE MO
DISTRICT BR	SHEET NO. 13
COUNTY McDONALD	
JOB NO. J7S0532	
CONTRACT ID.	
PROJECT NO.	
BRIDGE NO. A9230	

DATE	DESCRIPTION

IF A SEAL IS PRESENT ON THIS SHEET IT HAS BEEN ELECTRONICALLY SEALED AND DATED

MISSOURI HIGHWAYS AND TRANSPORTATION COMMISSION
105 WEST CAPITOL
JEFFERSON CITY, MO 65102
1-888-ASK-MODOT (1-888-275-6636)

EFK•Moen
Civil Engineering Design
13523 Barrett Parkway Dr. Suite 250
St. Louis, MO 63021
314-394-3100
Missouri Certificate of Authority: 001578

REV.

(1) Fabricator shall apply a bond breaker to this region excluding where joint filler will be applied.

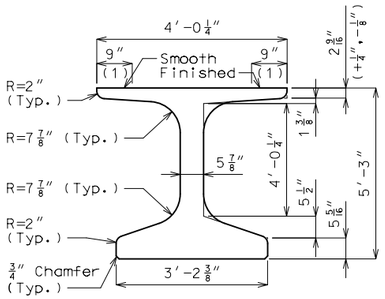

DIMENSIONS

(2) Outer strands tensioned to 2.02 kips/strand and inner strands to 8 kips/strand. Placed symmetrical about ℄ Girder. May be moved laterally in pairs.

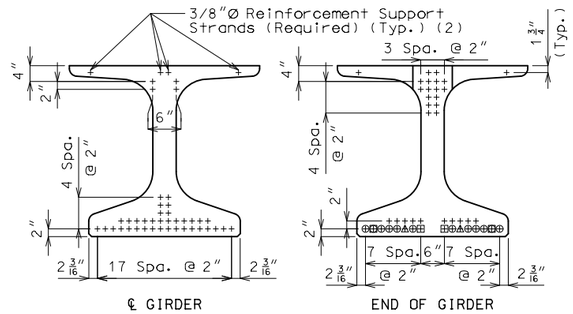

STRAND ARRANGEMENT

+ Indicates prestressing strand.

□ Indicates debonded for 4′-0″ from each end of girder.

All strands are fully bonded unless otherwise noted.

○ Indicates cut & shop bend with 3′-0″ projection.

△ Indicates debonded for 8′-0″ from each end of girder.

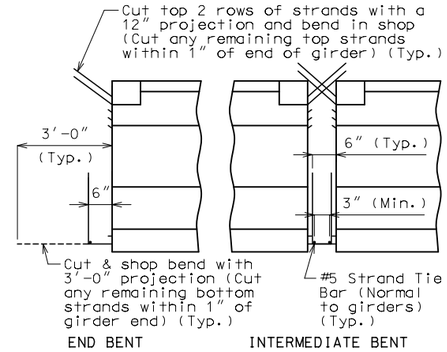

STRANDS AT GIRDER ENDS

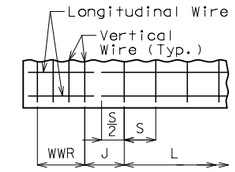

WELDED WIRE PLACEMENT

S = Vertical wire spacing

L = Length of WWR mats

J = Distance between WWR mats

Bill of Reinforcing Steel

Bars Each Girder

No.	Size/Mark		Length	Shape
142	3	G1	2′-10″	8
2	4	G3	5′-5 3/8″	20
2	4	G4	2′-3″	20
2	4	G5	3′-9 3/8″	20
14	4	G6	Varies	20

Welded Wire Each Girder

Mark	Size	S	W	L	J
WWR1	D20	4″	W8	14′-0″	8″
WWR2	D20	8″	W8	20′-0″	15 1/4″
WWR3	D20	16″	W8	45′-4″	--
WWR6	D31	2″	W12	16″	4″

Bending Diagrams

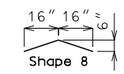

Shape 20

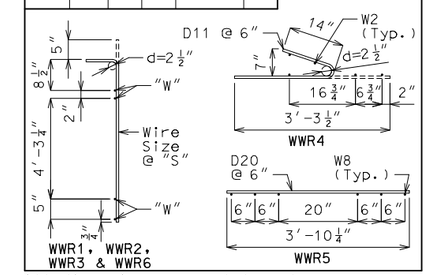

All dimensions are out to out.

Hooks and bends shall be in accordance with the CRSI Manual of Standard Practice for Detailing Reinforced Concrete Structures, Stirrup and Tie Dimensions.

Actual bar lengths are measured along centerline of bar to the nearest inch.

Minimum clearance to reinforcing shall be 1″, unless otherwise shown.

All bar reinforcement shall be Grade 60.

WWR shall not be epoxy coated.

G4 and G5 not required for interior girders. Half no. of G3, G4, G5 and G6 not required for ext. girders of end spans.

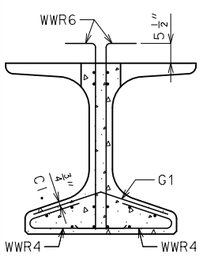

SECTION A-A

Strands not shown for clarity.

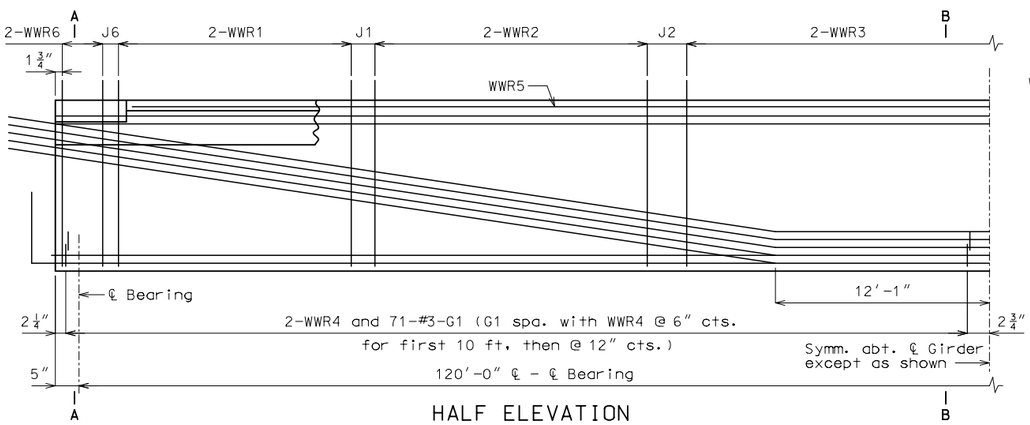

HALF ELEVATION

Reinforcement support strands not shown for clarity.

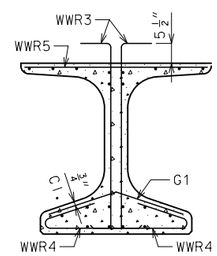

SECTION B-B

Strands not shown for clarity.

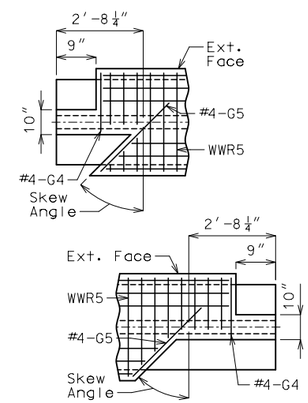

LEFT EXTERIOR GIRDER AT INTERMEDIATE BENT

Rotate 180° for right ext.

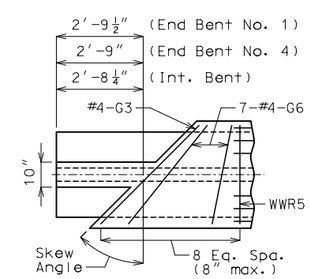

INTERIOR GIRDER AT ALL BENTS & EXTERIOR GIRDER AT END BENT

TOP FLANGE BLOCKOUT

Mirror for right advanced.

General Notes:

Concrete for prestressed beams shall be Class A-1 with f′c = 8000 psi and f′ci = 6500 psi.

Use 40 0.6″Ø Grade 270 strands with an initial prestress force of 1758 kips.

Pretensioned members shall be in accordance with Sec 1029.

Fabricator shall be responsible for location and design of lifting devices.

Exterior and interior girders are the same except: coil ties, top flange blockout, coil inserts for slab drains, holes for steel intermediate diaphragms.

For Girder Camber Diagram, see Sheet No. 23.

The 1 1/2″Ø holes shall be cast in the web for steel intermediate diaphragms. Drilling is not allowed. For location of holes and details of steel intermediate diaphragms, see Sheets No. 18 and 19.

For location of coil inserts at slab drains, see Sheet No. 22.

For location of coil ties at concrete diaphragms and integral bents, see Sheets No. 4, 12 and 20.

Alternate bar reinforcing steel details are provided and may be used. The same type of reinforcing steel shall be used for all girders in all spans.

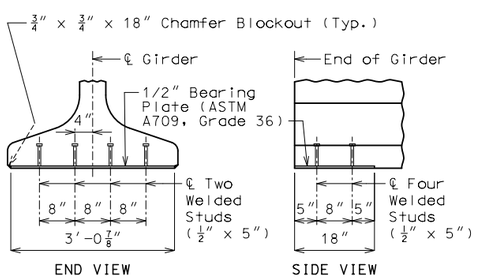

BEARING PLATE

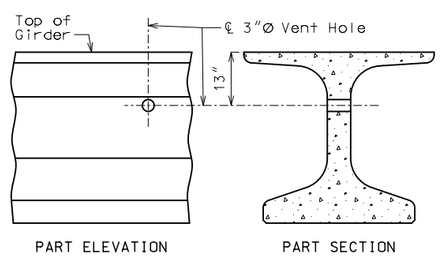

VENT HOLE

Place vent holes at or near upgrade 1/3 point of girders and clear reinforcing steel or strands by 1 1/2″ minimum and steel intermediate diaphragm bolt connections by 6″ minimum.

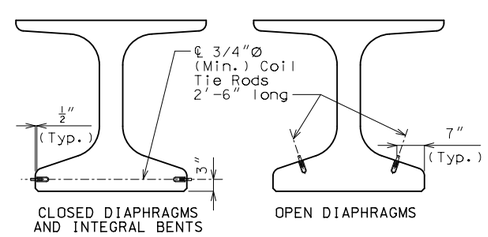

COIL TIES

Exclude coil tie at exterior face of exterior girders except at integral end bents.

NU-GIRDERS - SPANS (1-2) AND (3-4)

Note: This drawing is not to scale. Follow dimensions.

Detailed Feb. 2023
Checked Feb. 2023

FOR INFORMATION ONLY NOT FOR CONSTRUCTION

DATE PREPARED	
4/17/2023	
ROUTE 90	STATE MO
DISTRICT BR	SHEET NO. 14
COUNTY McDONALD	
JOB NO. J7S0532	
CONTRACT ID.	
PROJECT NO.	
BRIDGE NO. A9230	

DESCRIPTION

DATE

MISSOURI HIGHWAYS AND TRANSPORTATION COMMISSION

105 WEST CAPITOL
JEFFERSON CITY, MO 65102
1-888-ASK-MODOT (1-888-275-6636)

EFK•Moen
Civil Engineering Design
13523 Barrett Parkway Dr, Suite 250
St. Louis, MO 63021
314-394-3100
Missouri Certificate of Authority: 001578

IF A SEAL IS PRESENT ON THIS SHEET IT HAS BEEN ELECTRONICALLY SEALED AND DATED

REV.

(1) Fabricator shall apply a bond breaker to this region excluding where joint filler will be applied.

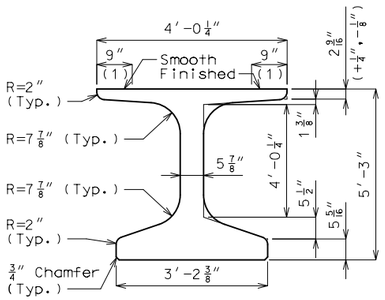

DIMENSIONS

(2) Outer strands tensioned to 2.02 kips/strand and inner strands to 8 kips/strand. Placed symmetrical about ℄ Girder. May be moved laterally in pairs.

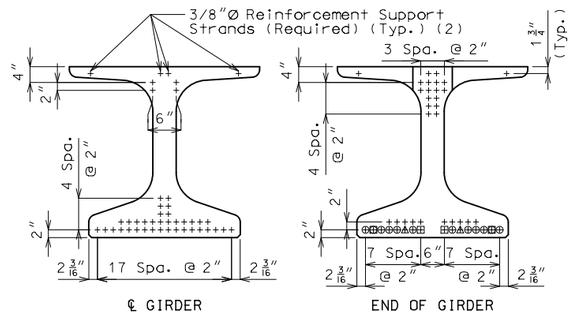

℄ GIRDER END OF GIRDER

STRAND ARRANGEMENT

+ Indicates prestressing strand.

□ Indicates debonded for 4′-0″ from each end of girder.

All strands are fully bonded unless otherwise noted.

○ Indicates cut & shop bend with 3′-0″ projection.

△ Indicates debonded for 8′-0″ from each end of girder.

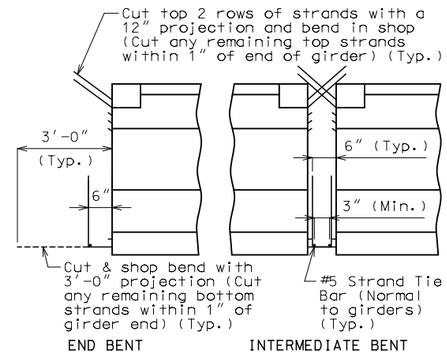

END BENT INTERMEDIATE BENT

STRANDS AT GIRDER ENDS

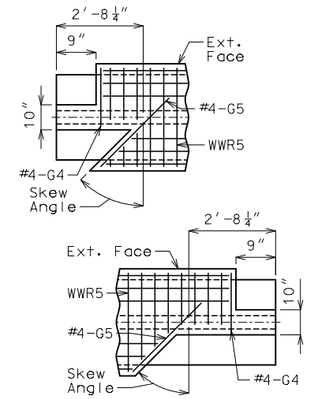

LEFT EXTERIOR GIRDER AT INTERMEDIATE BENT

Rotate 180° for right ext.

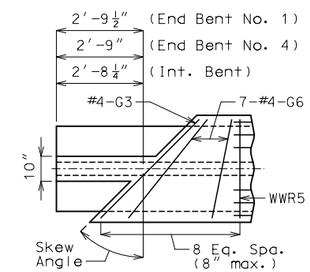

INTERIOR GIRDER AT ALL BENTS & EXTERIOR GIRDER AT END BENT

TOP FLANGE BLOCKOUT

Mirror for right advanced.

Bill of Reinforcing Steel - Each Girder			
No.	Size/ Mark	Length	Shape
278	5 B1	6′-8″	11
298	4 D1	4′-0″	9
2	4 G3	5′-5 3/8″	20
2	4 G4	2′-3″	20
2	4 G5	3′-9 3/8″	20
14	4 G6	Varies	20

Bending Diagrams

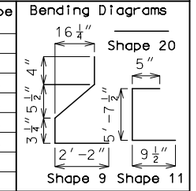

Welded Wire Reinforcement - Each Girder

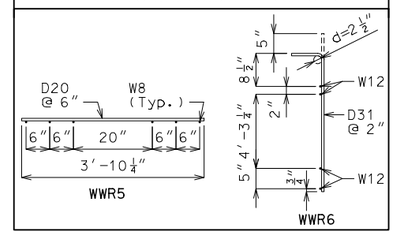

All dimensions are out to out.

Hooks and bends shall be in accordance with the CRSI Manual of Standard Practice for Detailing Reinforced Concrete Structures, Stirrup and Tie Dimensions.

Actual bar lengths are measured along centerline of bar to the nearest inch.

Minimum clearance to reinforcing shall be 1″.

All bar reinforcement shall be Grade 60.

The two D1 bars may be furnished as one bar at the fabricator's option.

All B1 bars shall be epoxy coated.

G4 and G5 not required for interior girders. Half no. of G3, G4, G5 and G6 not required for ext. girders of end spans.

General Notes:

Concrete for prestressed girders shall be Class A-1 with f′c = 8000 psi and f′ci = 6500 psi.

Use 40 0.6″Ø Grade 270 strands with an initial prestress force of 1758 kips.

Pretensioned members shall be in accordance with Sec 1029.

Fabricator shall be responsible for location and design of lifting devices.

Exterior and interior girders are the same except: coil ties, top flange blockout, coil inserts for slab drains, holes for steel intermediate diaphragms.

For Girder Camber Diagram, see Sheet No. 23.

The 1 1/2″Ø holes shall be cast in the web for steel intermediate diaphragms. Drilling is not allowed. For location of holes and details of steel intermediate diaphragms, see Sheets No. 18 and 19.

For location of coil inserts at slab drains, see Sheet No. 22.

For location of coil ties at concrete diaphragms and integral bents, see Sheets No. 4, 12 and 20.

Alternate bar reinforcing steel details are provided and may be used. The same type of reinforcing steel shall be used for all girders in all spans.

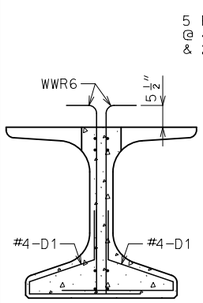

SECTION A-A

Strands not shown for clarity.

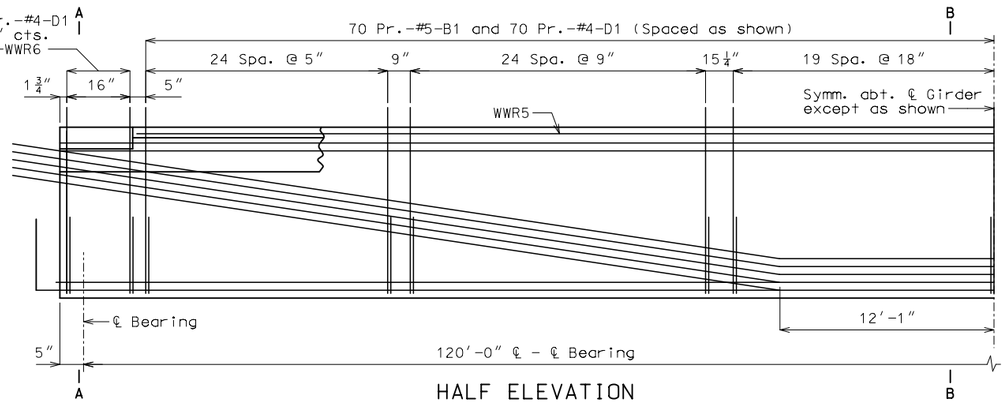

HALF ELEVATION

Reinforcement support strands not shown for clarity.

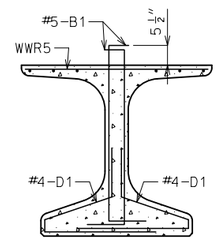

SECTION B-B

Strands not shown for clarity.

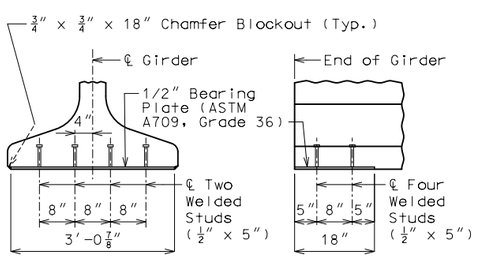

END VIEW SIDE VIEW

BEARING PLATE

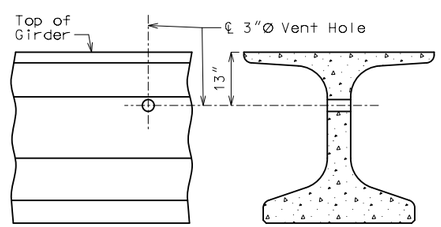

PART ELEVATION PART SECTION

VENT HOLE

Place vent holes at or near upgrade 1/3 point of girders and clear reinforcing steel or strands by 1 1/2″ minimum and steel intermediate diaphragm bolt connections by 6″ minimum.

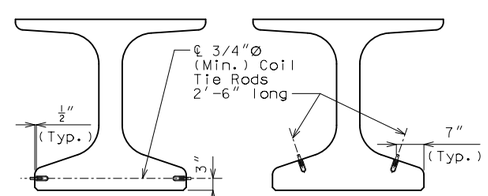

CLOSED DIAPHRAGMS AND INTEGRAL BENTS OPEN DIAPHRAGMS

COIL TIES

Exclude coil tie at exterior face of exterior girders except at integral end bents.

NU-GIRDERS (ALTERNATE REINFORCEMENT) - SPANS (1-2) AND (3-4)

Detailed Feb. 2023
Checked Feb. 2023

Note: This drawing is not to scale. Follow dimensions.

FOR INFORMATION ONLY NOT FOR CONSTRUCTION

DATE PREPARED 4/17/2023

ROUTE 90 | STATE MO
DISTRICT BR | SHEET NO. 15
COUNTY McDONALD
JOB NO. J7S0532
CONTRACT ID.
PROJECT NO.
BRIDGE NO. A9230

DESCRIPTION | DATE

MISSOURI HIGHWAYS AND TRANSPORTATION COMMISSION
105 WEST CAPITOL
JEFFERSON CITY, MO 65102
1-888-ASK-MODOT (1-888-275-6636)

EFK•Moen
Civil Engineering Design
13523 Barrett Parkway Dr. Suite 250
St. Louis, MO 63021
314-394-3100
Missouri Certificate of Authority: 001578

IF A SEAL IS PRESENT ON THIS SHEET IT HAS BEEN ELECTRONICALLY SEALED AND DATED

REV.

(1) Fabricator shall apply a bond breaker to this region excluding where joint filler will be applied.

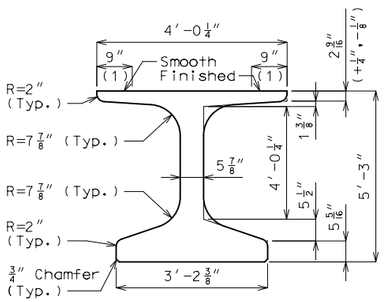

DIMENSIONS

(2) Outer strands tensioned to 2.02 kips/strand and inner strands to 8 kips/strand. Placed symmetrical about ℄ Girder. May be moved laterally in pairs.

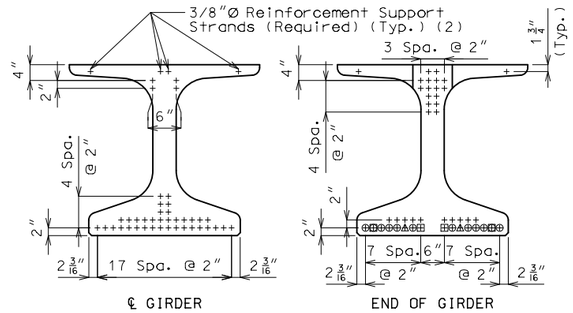

℄ GIRDER END OF GIRDER

STRAND ARRANGEMENT

+ Indicates prestressing strand.

□ Indicates debonded for 4′-0″ from each end of girder.

All strands are fully bonded unless otherwise noted.

○ Indicates cut & shop bend with 3′-0″ projection.

△ Indicates debonded for 8′-0″ from each end of girder.

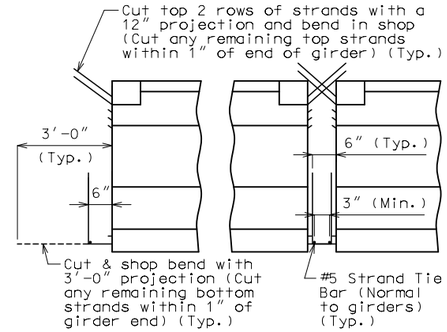

INTERMEDIATE BENT INTERMEDIATE BENT

STRANDS AT GIRDER ENDS

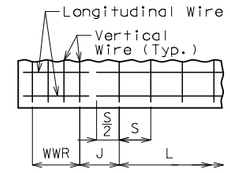

WELDED WIRE PLACEMENT

S = Vertical wire spacing

L = Length of WWR mats

J = Distance between WWR mats

Bill of Reinforcing Steel

Bars Each Girder

No.	Size/Mark		Length	Shape
146	3	G1	2′-10″	8
2	4	G3	5′-5 3/8″	20
2	4	G4	2′-3″	20
2	4	G5	3′-9 3/8″	20
14	4	G6	Varies	20

Welded Wire Each Girder

Mark	Size	S	W	L	J
WWR1	D20	4″	W8	13′-4″	8″
WWR2	D20	8″	W8	21′-4″	12 1/4″
WWR3	D20	16″	W8	48′-0″	--
WWR6	D31	2″	W12	16″	4″

Bending Diagrams

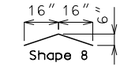

Shape 20

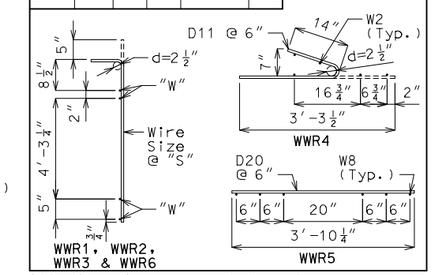

All dimensions are out to out.

Hooks and bends shall be in accordance with the CRSI Manual of Standard Practice for Detailing Reinforced Concrete Structures, Stirrup and Tie Dimensions.

Actual bar lengths are measured along centerline of bar to the nearest inch.

Minimum clearance to reinforcing shall be 1″, unless otherwise shown.

All bar reinforcement shall be Grade 60.

WWR shall not be epoxy coated.

G4 and G5 not required for interior girders. G3 and G6 not required for exterior girders of intermediate spans.

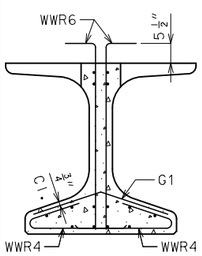

SECTION A-A

Strands not shown for clarity.

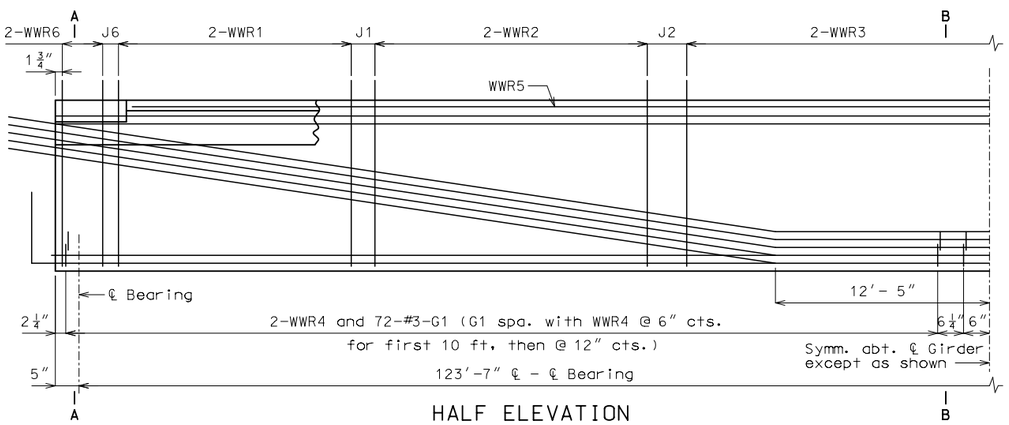

HALF ELEVATION

Reinforcement support strands not shown for clarity.

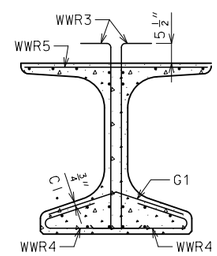

SECTION B-B

Strands not shown for clarity.

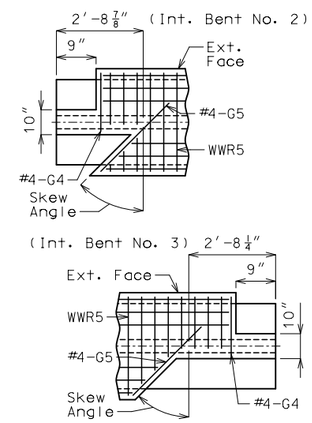

LEFT EXTERIOR GIRDER AT INTERMEDIATE BENT

Rotate 180° for right ext.

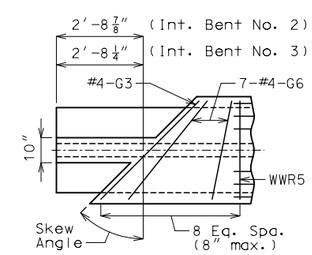

INTERIOR GIRDER AT ALL BENTS

TOP FLANGE BLOCKOUT

Mirror for right advanced.

General Notes:

Concrete for prestressed beams shall be Class A-1 with f′c = 8000 psi and f′ci = 6500 psi.

Use 40 0.6″Ø Grade 270 strands with an initial prestress force of 1758 kips.

Pretensioned members shall be in accordance with Sec 1029.

Fabricator shall be responsible for location and design of lifting devices.

Exterior and interior girders are the same except: coil ties, top flange blockout, coil inserts for slab drains, holes for steel intermediate diaphragms.

For Girder Camber Diagram, see Sheet No. 23.

The 1 1/2″Ø holes shall be cast in the web for steel intermediate diaphragms. Drilling is not allowed. For location of holes and details of steel intermediate diaphragms, see Sheets No. 18 and 19.

For location of coil inserts at slab drains, see Sheet No. 22.

For location of coil ties at concrete diaphragms and integral bents, see Sheet No. 20.

Alternate bar reinforcing steel details are provided and may be used. The same type of reinforcing steel shall be used for all girders in all spans.

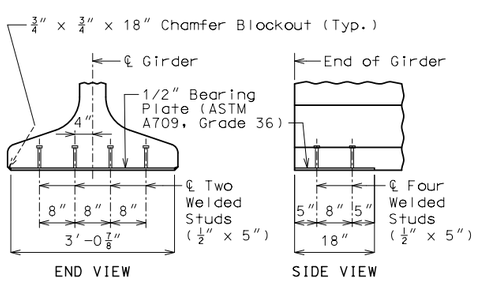

END VIEW SIDE VIEW

BEARING PLATE

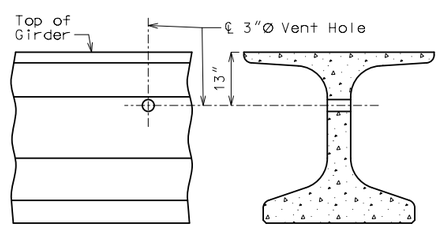

PART ELEVATION PART SECTION

VENT HOLE

Place vent holes at or near upgrade 1/3 point of girders and clear reinforcing steel or strands by 1 1/2″ minimum and steel intermediate diaphragm bolt connections by 6″ minimum.

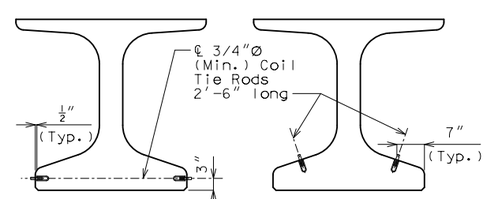

CLOSED DIAPHRAGMS AND INTEGRAL BENTS OPEN DIAPHRAGMS

COIL TIES

Exclude coil tie at exterior face of exterior girders except at integral end bents.

NU-GIRDERS - SPAN (2-3)

Detailed Feb. 2023
Checked Feb. 2023

Note: This drawing is not to scale. Follow dimensions.

FOR INFORMATION ONLY NOT FOR CONSTRUCTION

DATE PREPARED	
4/17/2023	
ROUTE 90	STATE MO
DISTRICT BR	SHEET NO. 16
COUNTY McDONALD	
JOB NO. J7S0532	
CONTRACT ID.	
PROJECT NO.	
BRIDGE NO. A9230	

DESCRIPTION DATE

MISSOURI HIGHWAYS AND TRANSPORTATION COMMISSION

105 WEST CAPITOL
JEFFERSON CITY, MO 65102
1-888-ASK-MODOT (1-888-275-6636)

EFK•Moen
Civil Engineering Design
13523 Barrett Parkway Dr, Suite 250
St. Louis, MO 63021
314-394-3100
Missouri Certificate of Authority: 001578

IF A SEAL IS PRESENT ON THIS SHEET IT HAS BEEN ELECTRONICALLY SEALED AND DATED

REV.

(1) Fabricator shall apply a bond breaker to this region excluding where joint filler will be applied.

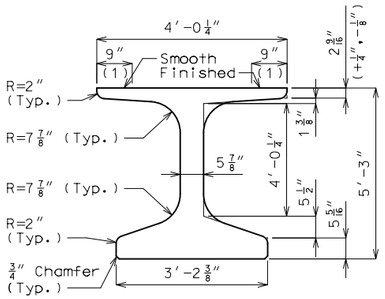

DIMENSIONS

(2) Outer strands tensioned to 2.02 kips/strand and inner strands to 8 kips/strand. Placed symmetrical about ℄ Girder. May be moved laterally in pairs.

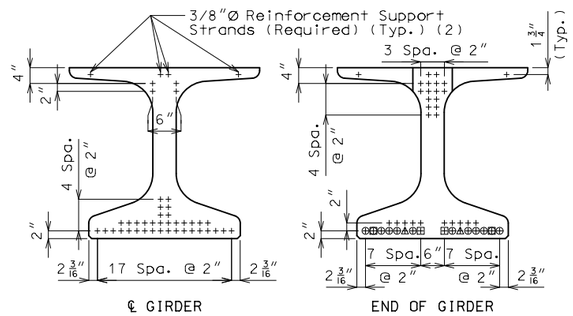

STRAND ARRANGEMENT

+ Indicates prestressing strand.

□ Indicates debonded for 4′-0″ from each end of girder.

All strands are fully bonded unless otherwise noted.

○ Indicates cut & shop bend with 3′-0″ projection.

△ Indicates debonded for 8′-0″ from each end of girder.

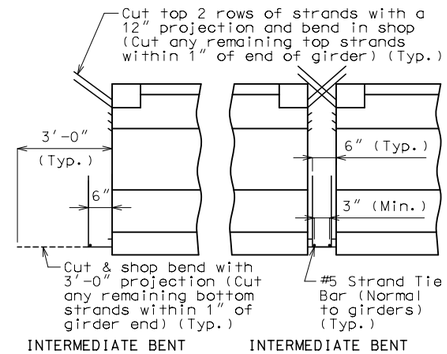

STRANDS AT GIRDER ENDS

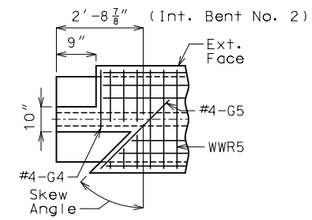

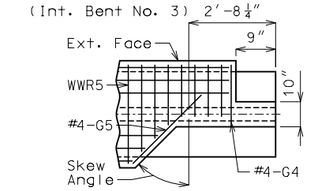

LEFT EXTERIOR GIRDER AT INTERMEDIATE BENT

Rotate 180° for right ext.

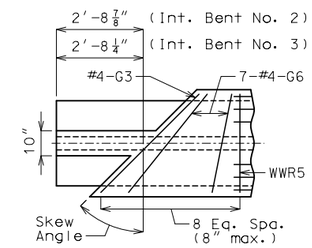

INTERIOR GIRDER AT ALL BENTS

TOP FLANGE BLOCKOUT

Mirror for right advanced.

Bill of Reinforcing Steel - Each Girder

No.	Size/ Mark	Length	Shape
286	5 B1	6′-8″	11
306	4 D1	4′-0″	9
2	4 G3	5′-5 3/8″	20
2	4 G4	2′-3″	20
2	4 G5	3′-9 3/8″	20
14	4 G6	Varies	20

Bending Diagrams

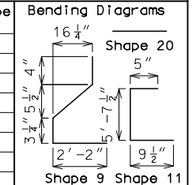

Welded Wire Reinforcement - Each Girder

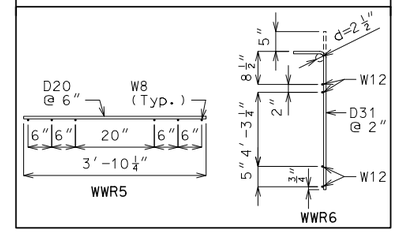

All dimensions are out to out.

Hooks and bends shall be in accordance with the CRSI Manual of Standard Practice for Detailing Reinforced Concrete Structures, Stirrup and Tie Dimensions.

Actual bar lengths are measured along centerline of bar to the nearest inch.

Minimum clearance to reinforcing shall be 1″.

All bar reinforcement shall be Grade 60.

The two D1 bars may be furnished as one bar at the fabricator's option.

All B1 bars shall be epoxy coated.

G4 and G5 not required for interior girders. G3 and G6 not required for exterior girders of intermediate spans.

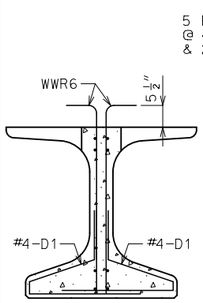

SECTION A-A

Strands not shown for clarity.

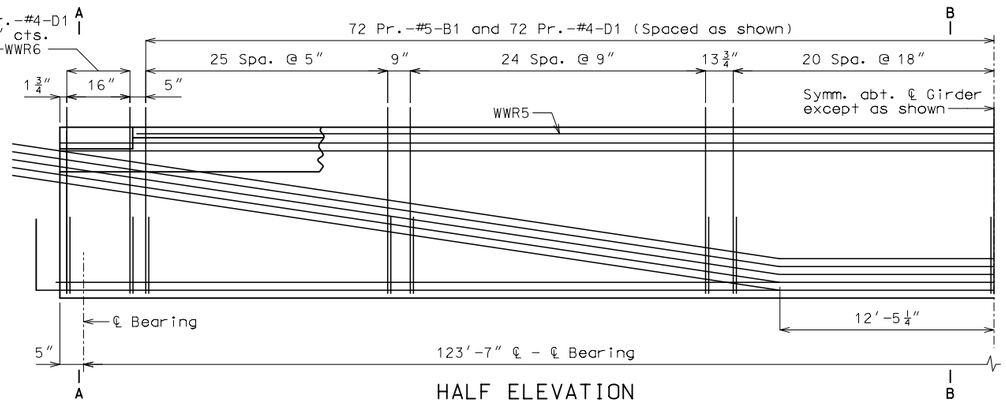

HALF ELEVATION

Reinforcement support strands not shown for clarity.

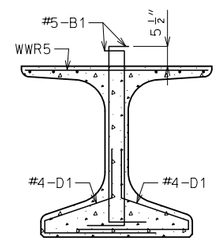

SECTION B-B

Strands not shown for clarity.

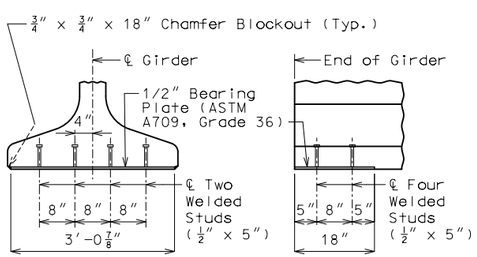

BEARING PLATE

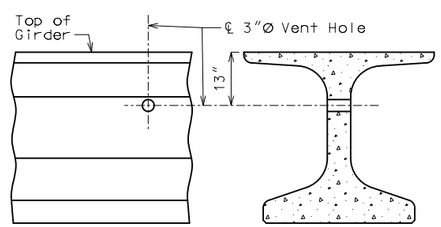

VENT HOLE

Place vent holes at or near upgrade 1/3 point of girders and clear reinforcing steel or strands by 1 1/2″ minimum and steel intermediate diaphragm bolt connections by 6″ minimum.

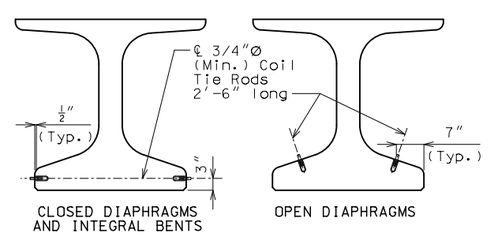

COIL TIES

Exclude coil tie at exterior face of exterior girders except at integral end bents.

General Notes:

Concrete for prestressed girders shall be Class A-1 with f′c = 8000 psi and f′ci = 6500 psi.

Use 40 0.6″Ø Grade 270 strands with an initial prestress force of 1758 kips.

Pretensioned members shall be in accordance with Sec 1029.

Fabricator shall be responsible for location and design of lifting devices.

Exterior and interior girders are the same except: coil ties, top flange blockout, coil inserts for slab drains, holes for steel intermediate diaphragms.

For Girder Camber Diagram, see Sheet No. 23.

The 1 1/2″Ø holes shall be cast in the web for steel intermediate diaphragms. Drilling is not allowed. For location of holes and details of steel intermediate diaphragms, see Sheets No. 18 and 19.

For location of coil inserts at slab drains, see Sheet No. 22.

For location of coil ties at concrete diaphragms and integral bents, see Sheet No. 20.

Alternate bar reinforcing steel details are provided and may be used. The same type of reinforcing steel shall be used for all girders in all spans.

NU-GIRDERS (ALTERNATE REINFORCEMENT) - SPANS (2-3)

Detailed Feb. 2023
Checked Feb. 2023

Note: This drawing is not to scale. Follow dimensions.

FOR INFORMATION ONLY NOT FOR CONSTRUCTION

DATE PREPARED 4/17/2023

ROUTE 90 | STATE MO
DISTRICT BR | SHEET NO. 17
COUNTY McDONALD
JOB NO. J7S0532
CONTRACT ID.
PROJECT NO.
BRIDGE NO. A9230

DESCRIPTION | DATE

IF A SEAL IS PRESENT ON THIS SHEET IT HAS BEEN ELECTRONICALLY SEALED AND DATED

MISSOURI HIGHWAYS AND TRANSPORTATION COMMISSION
105 WEST CAPITOL
JEFFERSON CITY, MO 65102
1-888-ASK-MODOT (1-888-275-6636)

EFK•Moen
Civil Engineering Design
13523 Barrett Parkway Dr. Suite 250
St. Louis, MO 63021
314-394-3100
Missouri Certificate of Authority: 001578

REV.

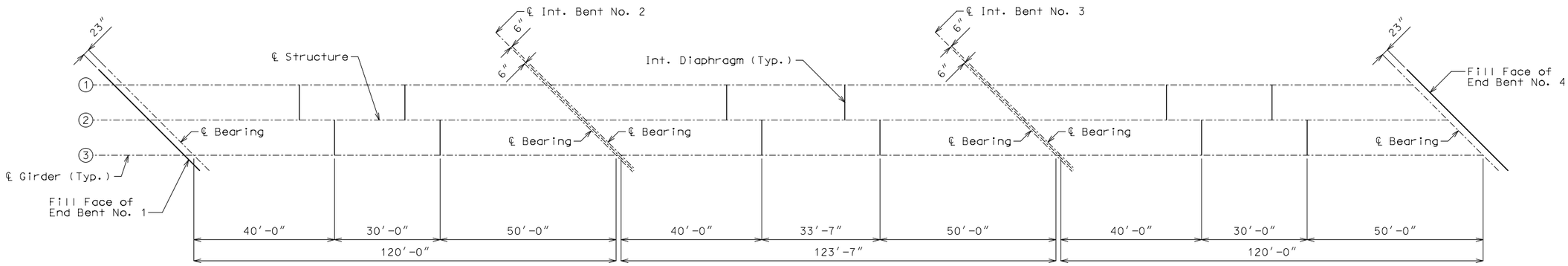

PLAN SHOWING LOCATION OF STEEL INTERMEDIATE DIAPHRAGMS

Longitudinal dimensions are horizontal.

STEEL INTERMEDIATE DIAPHRAGMS

Detailed Feb. 2023
Checked Feb. 2023

Note: This drawing is not to scale. Follow dimensions.

FOR INFORMATION ONLY NOT FOR CONSTRUCTION

DATE PREPARED 4/17/2023

ROUTE	STATE
90	MO
DISTRICT	SHEET NO.
BR	18

COUNTY McDONALD

JOB NO. J7S0532

CONTRACT ID.

PROJECT NO.

BRIDGE NO. A9230

DESCRIPTION	DATE

MISSOURI HIGHWAYS AND TRANSPORTATION COMMISSION

105 WEST CAPITOL
JEFFERSON CITY, MO 65102
1-888-ASK-MODOT (1-888-275-6636)

EFK•Moen
Civil Engineering Design
13523 Barrett Parkway Dr. Suite 250
St. Louis, MO 63021
314-394-3100
Missouri Certificate of Authority: 001578

IF A SEAL IS PRESENT ON THIS SHEET IT HAS BEEN ELECTRONICALLY SEALED AND DATED

REV.

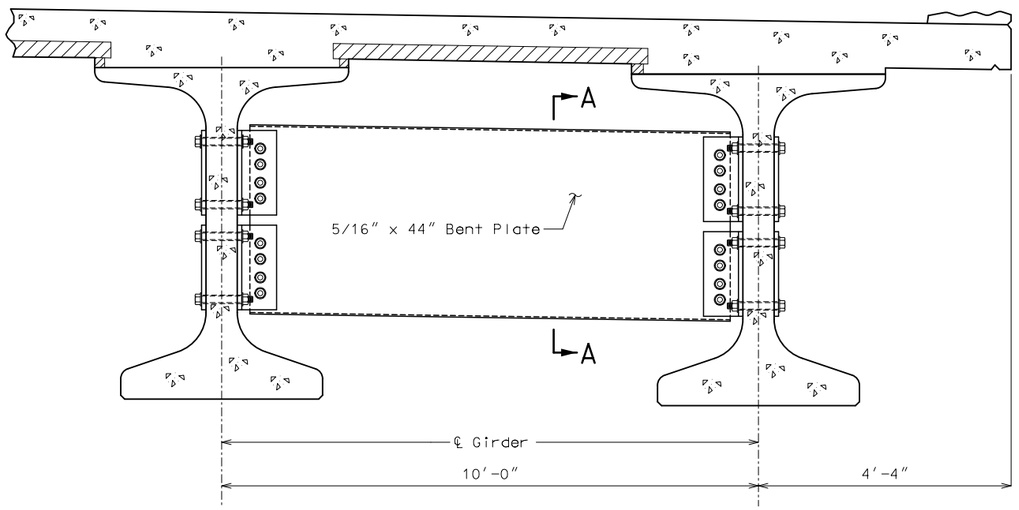

PART SECTION SHOWING
INTERMEDIATE DIAPHRAGMS

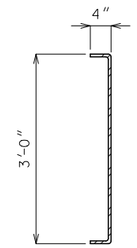

SECTION A-A

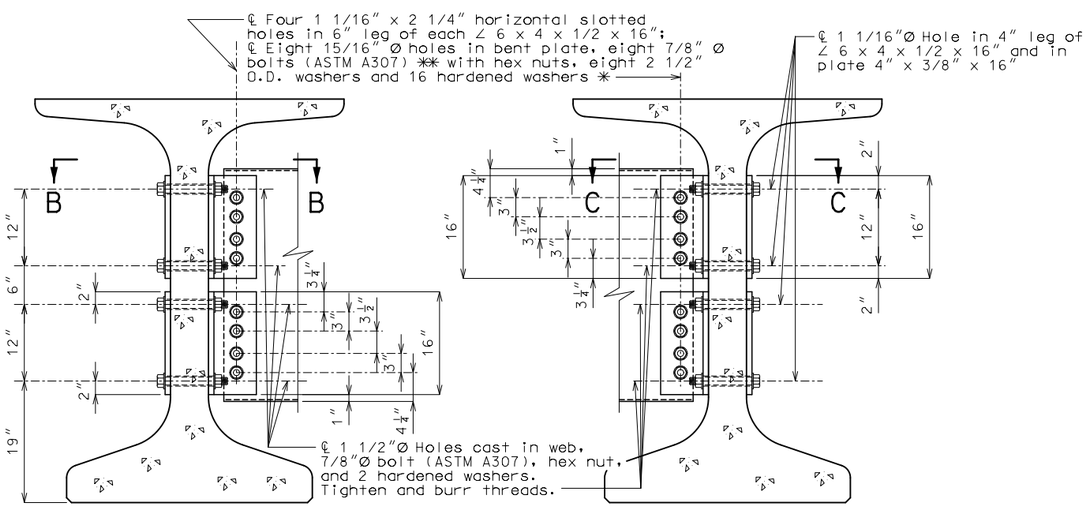

SECTION THRU INT. GIRDER
AT DIAPHRAGM

SECTION THRU EXT. GIRDER
AT DIAPHRAGM

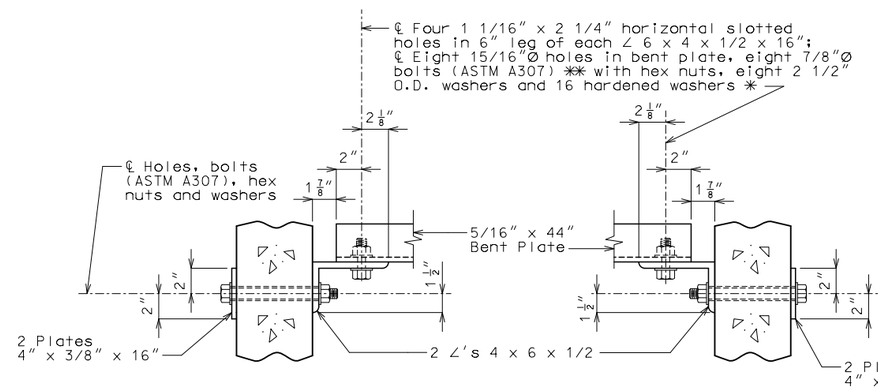

SECTION B-B

SECTION C-C

STEEL DIAPHRAGM NOTES:

✱ In lieu of 2 1/2" outside diameter washers, contractor may substitute a 3/16" (Min. thickness) plate with four 15/16" Ø holes and one hardened washer per bolt.

✱✱ Bolts shall be tightened to provide a tension of one-half that specified in Sec 712 for high strength bolt installation. ASTM F3125 Grade A325 Type 1 bolts may be substituted for and installed in accordance with the requirements for the specified ASTM A307 bolts.

All diaphragm materials including bolts, nuts, and washers shall be galvanized.

Fabricated structural steel shall be ASTM A709 Grade 36 except as noted.

Payment for furnishing and installing steel intermediate diaphragms will be considered completely covered by the contract unit price for Steel Intermediate Diaphragm for P/S Concrete Girders.

Shop drawings will not be required for steel intermediate diaphragms and angle connections.

For location of intermediate diaphragms, see Sheet No. 18.

STEEL INTERMEDIATE DIAPHRAGMS

Detailed Feb. 2023
Checked Feb. 2023

Note: This drawing is not to scale. Follow dimensions.

FOR INFORMATION ONLY NOT FOR CONSTRUCTION

DATE PREPARED	4/17/2023
ROUTE	90
STATE	MO
DISTRICT	BR
SHEET NO.	19
COUNTY	McDONALD
JOB NO.	J7S0532
CONTRACT ID.	
PROJECT NO.	
BRIDGE NO.	A9230

DATE	DESCRIPTION

MISSOURI HIGHWAYS AND TRANSPORTATION COMMISSION
105 WEST CAPITOL
JEFFERSON CITY, MO 65102
1-888-ASK-MODOT (1-888-275-6636)

EFK•Moen
Civil Engineering Design
13523 Barrett Parkway Dr, Suite 250
St. Louis, MO 63021
314-394-3100
Missouri Certificate of Authority: 001578

IF A SEAL IS PRESENT ON THIS SHEET IT HAS BEEN ELECTRONICALLY SEALED AND DATED

REV.

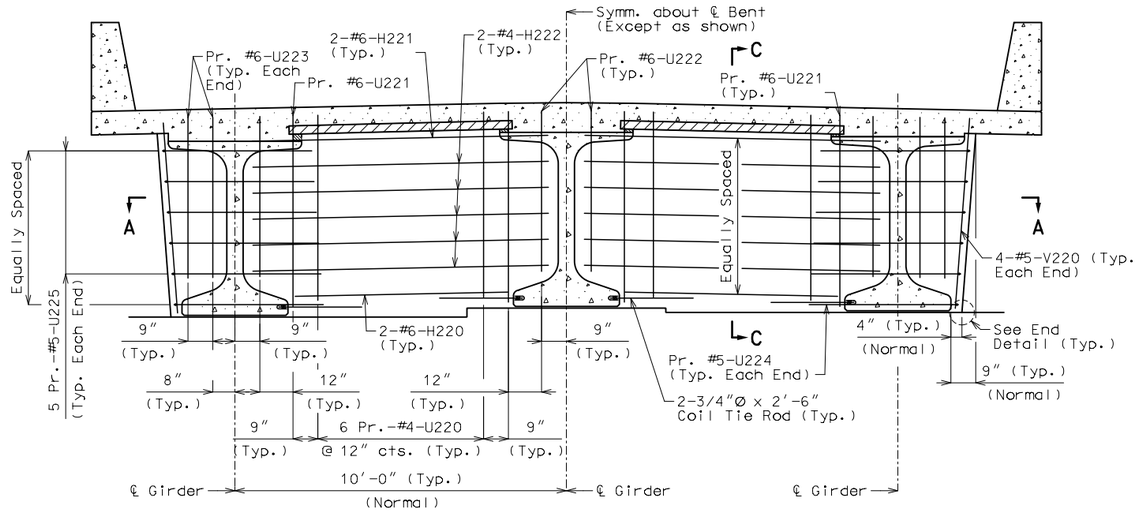

SECTION NEAR INTERMEDIATE BENT NO. 2

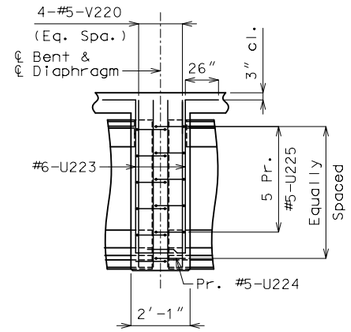

SECTION B-B

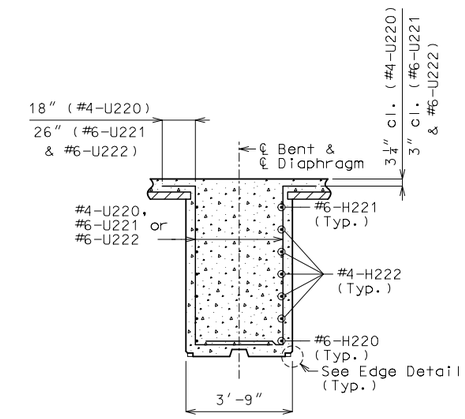

SECTION C-C

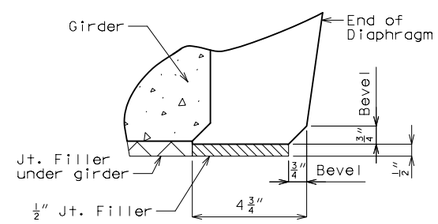

END DETAIL

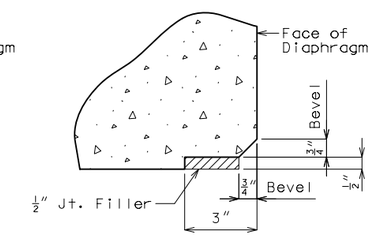

EDGE DETAIL

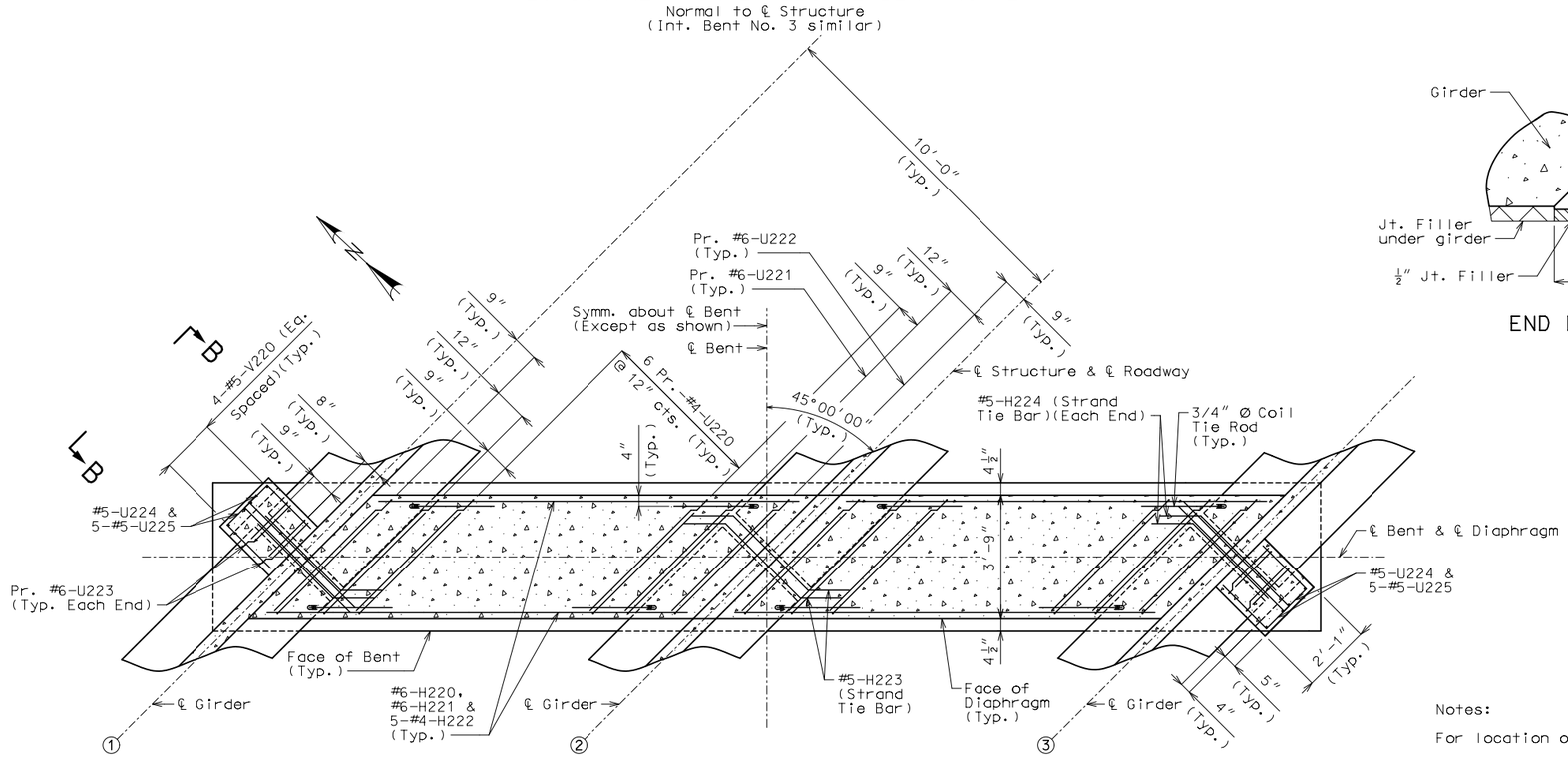

SECTION A-A

Diaphragm for Intermediate Bent No. 2 shown,
Diaphragm for Intermediate Bent No. 3 similar.

Notes:

For location of Strand Tie Bars and Coil Tie Rods, see Sheets No. 14 thru 17.

All U-Bars in diaphragms are to be placed parallel to ℄ Girders.

Diaphragms at Intermediate Bents shall be built vertical.

DETAILS OF CONCRETE DIAPHRAGMS AT INTERMEDIATE BENTS NO. 2 & 3

Detailed Feb. 2023
Checked Feb. 2023

Note: This drawing is not to scale. Follow dimensions.

FOR INFORMATION ONLY NOT FOR CONSTRUCTION

DATE PREPARED	
4/17/2023	
ROUTE 90	STATE MO
DISTRICT BR	SHEET NO. 20
COUNTY McDONALD	
JOB NO. J7S0532	
CONTRACT ID.	
PROJECT NO.	
BRIDGE NO. A9230	

DATE	DESCRIPTION

MISSOURI HIGHWAYS AND TRANSPORTATION COMMISSION
105 WEST CAPITOL
JEFFERSON CITY, MO 65102
1-888-ASK-MODOT (1-888-275-6636)

EFK•Moen
Civil Engineering Design
13523 Barrett Parkway Dr, Suite 250
St. Louis, MO 63021
314-394-3100
Missouri Certificate of Authority: 001578

IF A SEAL IS PRESENT ON THIS SHEET IT HAS BEEN ELECTRONICALLY SEALED AND DATED

REV.

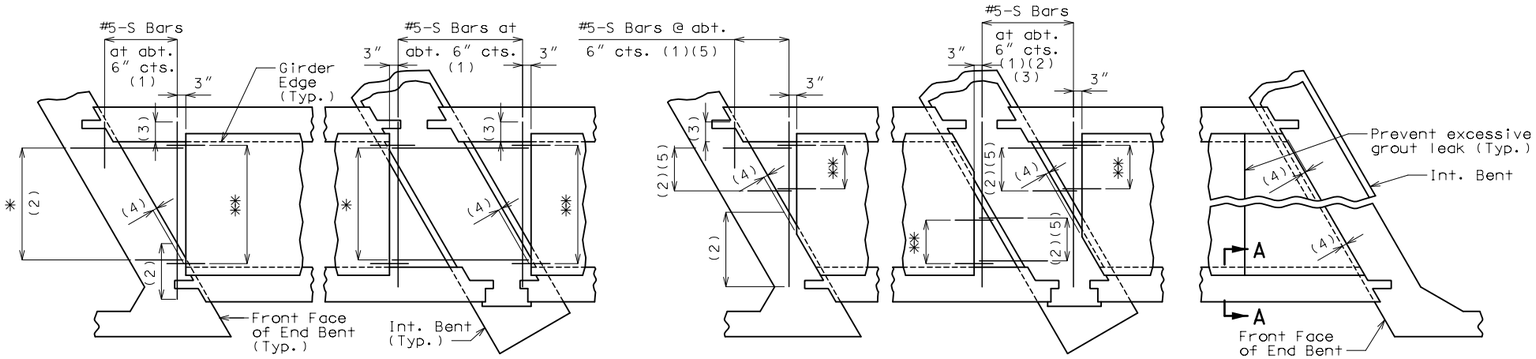

SQUARED END PANELS OR TRUNCATED END PANELS

PLAN SHOWING PANELS PLACEMENT

* #5-S Bars at abt. 9" cts. (1)
** #3-P1 at 12" cts. (End panels only)

SKEWED END PANELS

Joint Filler Dimensions		
Width	Height	
	Min.	Max.
3"	1"	4"

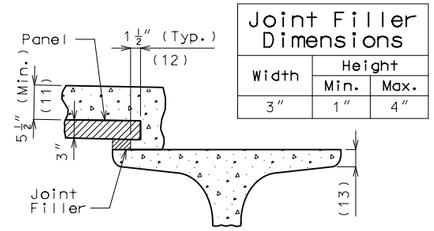

SECTION A-A

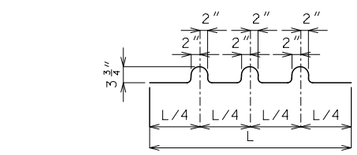

BENDING DIAGRAM FOR U1 BAR

U1 Bars may be oriented at right angles to location and spacing shown. U1 Bars shall be placed between P1 bars.

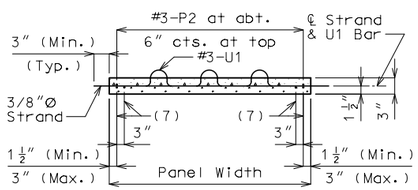

SECTION B-B

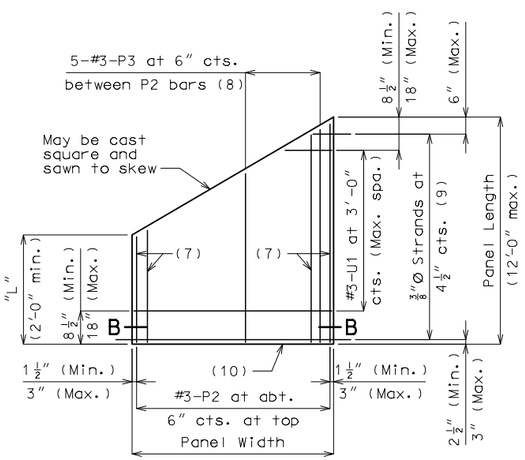

PLAN OF OPTIONAL SKEWED END PANEL

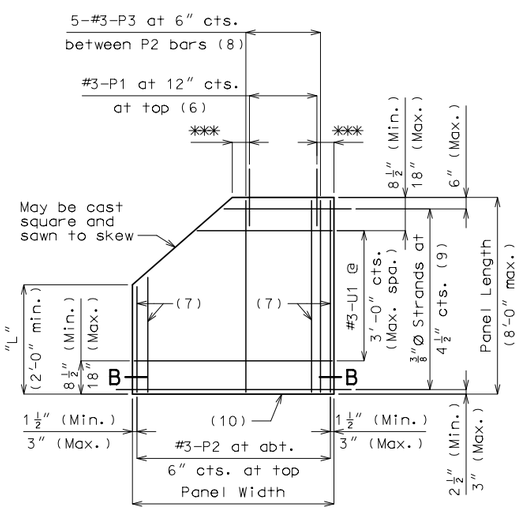

PLAN OF OPTIONAL TRUNCATED END PANEL

*** 3" (Min.), 6" (Max.)

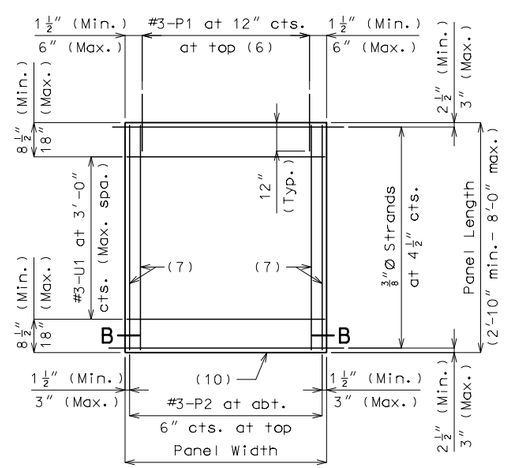

PLAN OF SQUARED PANEL

Reference Notes:

Plan of Panels Placement:

(1) S-bars shown are bottom steel in slab between panels and used with squared and truncated end panels only.

(2) Extend S-bars 18 inches beyond the front face of end bents and int. bents for squared and truncated end panels only.

(3) Extend S-bars 9 inches beyond edge of girder (Typ.).

(4) End panels shall be dimensioned 1/2" min. to 1 1/2" max. from the inside face of diaphragm.

(5) For truncated end panels, use a min. of #5-S bars at 6" crossings in openings, or min. 4x4-W7xW7.

Plans of Panels:

(6) For end panels only, P1 bars shall be 2'-0" in length and embedded 12". P1 bars will not be required for panels at squared integral end bents.

(7) #3-P2 bars near edge of panel at bottom (under strands).

(8) Use #3-P3 bars if panel is skewed 45° or greater.

(9) Any strand 2'-0" or shorter shall have a #4 reinforcing bar on each side of it, centered between strands. Strands 2'-0" or shorter may then be debonded at the fabricator's option.

(10) Optional 1/2" x 45° Chamfer one or both sides at bottom.

Section A-A:

(11) Slab thickness over prestressed panels varies due to girder camber. In order to maintain minimum slab thickness, it may be necessary to raise the grade uniformly throughout the structure. No payment will be made for additional labor or materials required for necessary grade adjustment.

(12) Contractor shall ensure proper consolidation under and between panels.

(13) At the contractor's option, the variation in slab thickness over prestressed panels may be eliminated or reduced by increasing and varying the girder top flange thickness. Dimensions shall be shown on the shop drawings.

DETAILS OF PRESTRESSED PANELS

Detailed Feb. 2023
Checked Feb. 2023

Note: This drawing is not to scale. Follow dimensions.

General Notes:

Prestressed Panels:

Concrete for prestressed panels shall be Class A-1 with f'c = 6,000 psi, f'ci = 4,000 psi.

The top surface of all panels shall receive a scored finish with a depth of scoring of 1/8" perpendicular to the prestressing strands in the panels.

Prestressing tendons shall be high-tensile strength, uncoated, seven-wire, low-relaxation strands for prestressed concrete in accordance with AASHTO M 203 Grade 270, with nominal diameter of strand = 3/8" and nominal area = 0.085 sq.in. and minimum ultimate strength = 22.95 kips (270 ksi). Larger strands may be used with the same spacing and initial tension.

Initial prestressing force = 17.2 kips/strand.

The method and sequence of releasing the strands shall be shown on the shop drawings.

Suitable anchorage devices for lifting panels may be cast in panels, provided the devices are shown on the shop drawings and approved by the engineer. Panel lengths shall be determined by the contractor and shown on the shop drawings.

When squared end panels are used at skewed bents, the skewed portion shall be cast full depth. No separate payment will be made for additional concrete and reinforcing required.

Support from diaphragm forms is required under the optional skewed end until cast-in-place concrete has reached 3,000 psi compressive strength.

Prestressed panels shall be brought to saturated surface-dry (SSD) condition just prior to the deck pour. There shall be no free standing water on the panels or in the area to be cast.

The prestressed panel quantities are not included in the table of estimated quantities for the slab.

Reinforcing Steel:

All dimensions are out to out.

Hooks and bends shall be in accordance with the CRSI Manual of Standard Practice for Detailing Reinforced Concrete Structures, Stirrup and Tie Dimensions.

Minimum clearance to reinforcing steel shall be 1 1/2", unless otherwise shown.

If U1 bars interfere with placement of slab steel, U1 loops may be bent over, as necessary, to clear slab steel.

Deformed welded wire reinforcement (WWR) providing a minimum area of reinforcing perpendicular to strands of 0.22 sq in./ft, with spacing parallel to strands sufficient to ensure proper handling, may be used in lieu of the #3-P2 bars shown. Wire diameter shall not be larger than 0.375 inch. The above alternative reinforcement criteria may be used in lieu of the #3-P3 bars, when required, and placed over a width not less than 2 feet.

The following reinforcing steel shall be tied securely to the strands with the following maximum spacing in each direction:
#3-P2 bars at 16 inches.
WWR at 24 inches.

The #3-U1 bars shall be tied securely to #3-P2 bars, to WWR or to strands (when placed between P1 bars) at about 3-foot centers.

Minimum reinforcement steel length shall be 2'-0".

All reinforcement other than prestressing strands shall be epoxy coated.

Precast panels may be in contact with stirrup reinforcing in diaphragms.

S-bars are not listed in the bill of reinforcing.

Cost of S-bars will be considered completely covered by the contract unit price for the slab.

Joint Filler:

Joint filler shall be preformed fiber expansion joint material in accordance with Sec 1057 or expanded or extruded polystyrene bedding material in accordance with Sec 1073.

Use Slab Haunching Diagram on Sheet No. 23 for determining thickness of joint filler within the limits noted in the table of Joint Filler Dimensions.

Thicker material may be used on one or both sides of the girder to reduce cast-in-place concrete thickness to within tolerances.

The same thickness of preformed fiber expansion joint material shall be used under any one edge of any panel except at locations where top flange thickness may be stepped. The maximum change in thickness between adjacent panels shall be 1/4 inch. The polystyrene bedding material may be cut with a transition to match haunch height above top of flange.

Joint filler shall be glued to the girder. When thickness exceeds 1 1/2 inches, the joint filler shall be glued top and bottom. The glue used shall be the type recommended by the joint filler manufacturer.

Edges of panels shall be uniformly seated on the joint filler before slab reinforcement is placed.

FOR INFORMATION ONLY NOT FOR CONSTRUCTION

DATE PREPARED	
4/17/2023	
ROUTE 90	STATE MO
DISTRICT BR	SHEET NO. 21
COUNTY McDONALD	
JOB NO. J7S0532	
CONTRACT ID.	
PROJECT NO.	
BRIDGE NO. A9230	

DESCRIPTION | DATE

MISSOURI HIGHWAYS AND TRANSPORTATION COMMISSION
105 WEST CAPITOL
JEFFERSON CITY, MO 65102
1-888-ASK-MODOT (1-888-275-6636)

EFK•Moen
Civil Engineering Design
13523 Barrett Parkway Dr, Suite 250
St. Louis, MO 63021
314-394-3100
Missouri Certificate of Authority: 001578

IF A SEAL IS PRESENT ON THIS SHEET IT HAS BEEN ELECTRONICALLY SEALED AND DATED

REV.

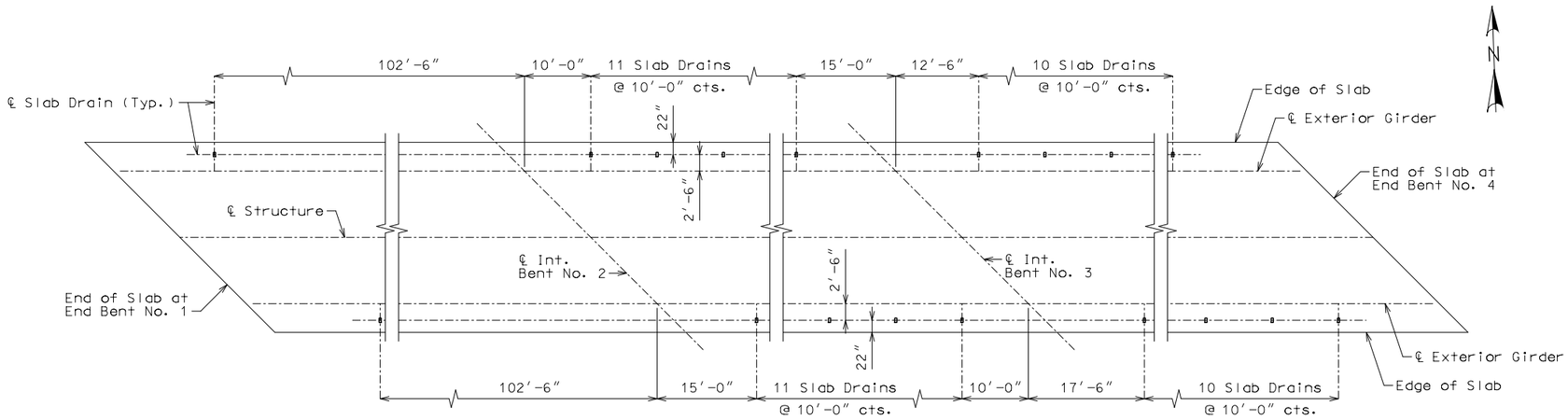

PLAN OF SLAB SHOWING SLAB DRAIN LOCATIONS

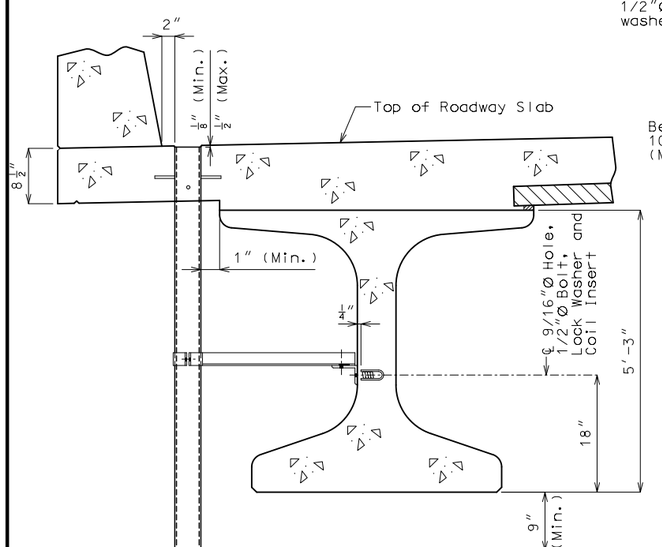

PART SECTION NEAR DRAIN

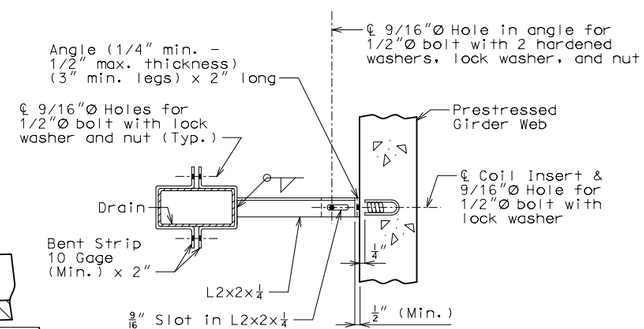

PART SECTION SHOWING BRACKET ASSEMBLY

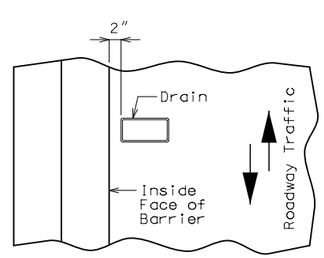

PART PLAN OF SLAB AT DRAIN

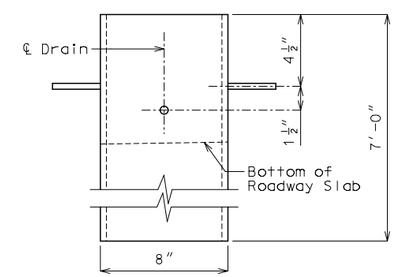

ELEVATION OF DRAIN

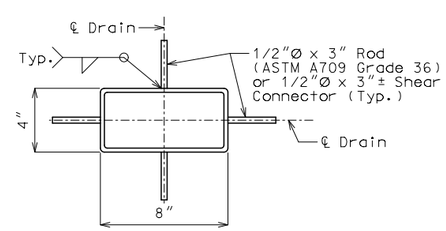

PLAN OF STEEL DRAIN OPTION

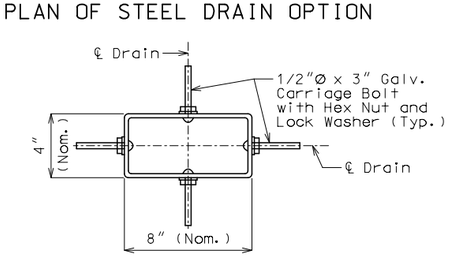

PLAN OF FRP DRAIN OPTION

SLAB DRAINS

Note: This drawing is not to scale. Follow dimensions.

General Notes:

Contractor shall have the option to construct either steel or FRP slab drains. All drains shall be of same type.

Slab drain bracket assembly shall be ASTM A709 Grade 36 steel.

Locate drains in slab by dimensions shown in Part Section Near Drain.

Reinforcing steel shall be shifted to clear drains.

The coil inserts and bracket assembly shall be galvanized in accordance with ASTM A123.

All bolts, hardened washers, lock washers and nuts shall be galvanized in accordance with AASHTO M 232 (ASTM A153), Class C.

All 1/2"Ø bolts shall be ASTM A307.

Shop drawings will not be required for the slab drains and the bracket assembly.

The coil insert required for the bracket assembly attachment shall be located on the prestressed girder shop drawings.

Coil inserts shall have a concrete pull-out strength (ultimate load) of at least 2,500 pounds in 5,000 psi concrete.

The bolt required to attach the slab drain bracket assembly to the prestressed girder web shall be supplied by the prestressed girder fabricator.

Notes for Steel Drain:

Slab drains may be fabricated of either 1/4" welded sheets of ASTM A709 Grade 36 steel or from 1/4" structural steel tubing ASTM A500 or A501.

Outside dimensions of drains are 8" x 4".

The drains shall be galvanized in accordance with ASTM A123.

Notes for FRP Drain:

Drains shall be machine filament-wound thermosetting resin tubing meeting the requirements of ASTM D2996 with the following exceptions:

Shape of drains shall be rectangular with outside nominal dimensions of 8" x 4".

Minimum reinforced wall thickness shall be 1/4 inch.

The resin used shall be ultraviolet (UV) resistant and/or have UV inhibitors mixed throughout. Drains may have an exterior coating for additional UV resistance.

The color of the slab drain shall be gray (Federal Standard 26373). The color shall be uniform throughout the resin and any coating used.

The combination of materials used in the manufacture of the drains shall be tested for UV resistance in accordance with ASTM D4329 Cycle A. The representative material shall withstand at least 500 hours of testing with only minor discoloration and without any physical deterioration. The contractor shall furnish the results of the required ultraviolet testing prior to acceptance of the slab drains.

At the contractor's option, drains may be field cut. The method of cutting FRP slab drain shall be as recommended by the manufacturer to ensure a smooth, chip free cut.

FOR INFORMATION ONLY NOT FOR CONSTRUCTION

DATE PREPARED	
4/17/2023	
ROUTE 90	STATE MO
DISTRICT BR	SHEET NO. 22
COUNTY McDONALD	
JOB NO. J7S0532	
CONTRACT ID.	
PROJECT NO.	
BRIDGE NO. A9230	

DESCRIPTION	DATE

IF A SEAL IS PRESENT ON THIS SHEET IT HAS BEEN ELECTRONICALLY SEALED AND DATED

MISSOURI HIGHWAYS AND TRANSPORTATION COMMISSION
105 WEST CAPITOL
JEFFERSON CITY, MO 65102
1-888-ASK-MODOT (1-888-275-6636)

EFK•Moen
Civil Engineering Design
13523 Barrett Parkway Dr. Suite 250
St. Louis, MO 63021
314-394-3100
Missouri Certificate of Authority: 001578

REV.

Detailed Feb. 2023
Checked Feb. 2023

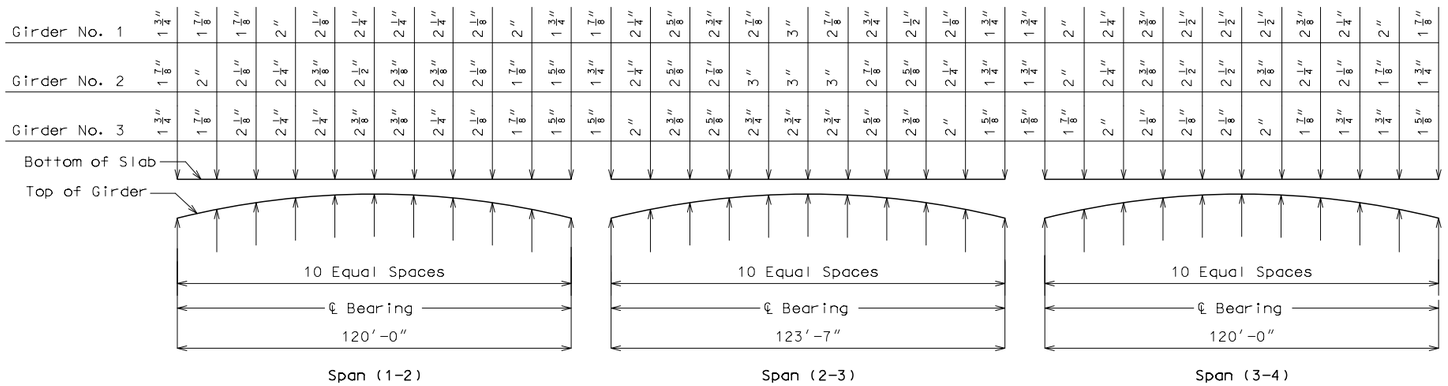

THEORETICAL SLAB HAUNCHING DIAGRAM (ESTIMATED AT 90 DAYS)

If girder camber is different from that shown in the camber diagram, in order to maintain minimum slab thickness, an adjustment of the slab haunches, an increase in slab thickness or a raise in grade uniformly throughout the structure shall be necessary. No payment will be made for additional labor or materials required for variation in haunching, slab thickness or grade adjustment.

Concrete in the slab haunches is included in the Estimated Quantities for Slab on Concrete NU-Girder.

Theoretical Bottom of Slab Elevations at Centerline of Girder (Prior to forming for slab) (Estimated at 90 days)

Girder Number	Span (1-2) (120'-0" ℄ Brg. - ℄ Brg.)										
	℄ Brg.	.10	.20	.30	.40	.50	.60	.70	.80	.90	℄ Brg.
1	933.89	934.07	934.25	934.41	934.56	934.68	934.78	934.85	934.90	934.93	934.95
2	934.19	934.37	934.55	934.72	934.86	934.98	935.07	935.14	935.18	935.20	935.21
3	934.09	934.27	934.45	934.61	934.75	934.86	934.94	935.00	935.04	935.06	935.06
Girder Number	Span (2-3) (123'-7" ℄ Brg. - ℄ Brg.)										
	℄ Brg.	.10	.20	.30	.40	.50	.60	.70	.80	.90	℄ Brg.
1	934.96	935.09	935.20	935.30	935.38	935.43	935.45	935.46	935.43	935.39	935.34
2	935.22	935.34	935.46	935.55	935.62	935.67	935.69	935.68	935.65	935.60	935.54
3	935.07	935.19	935.29	935.38	935.44	935.48	935.49	935.48	935.45	935.40	935.33
Girder Number	Span (3-4) (120'-0" ℄ Brg. - ℄ Brg.)										
	℄ Brg.	.10	.20	.30	.40	.50	.60	.70	.80	.90	℄ Brg.
1	935.34	935.40	935.44	935.47	935.47	935.45	935.40	935.32	935.23	935.11	934.99
2	935.54	935.59	935.64	935.66	935.65	935.63	935.57	935.49	935.38	935.26	935.14
3	935.33	935.38	935.41	935.42	935.41	935.38	935.32	935.23	935.13	935.01	934.89

Elevations are based on a constant slab thickness of 8 1/2" and include allowance for theoretical dead load deflections due to weight of slab (including precast panel) and barrier.

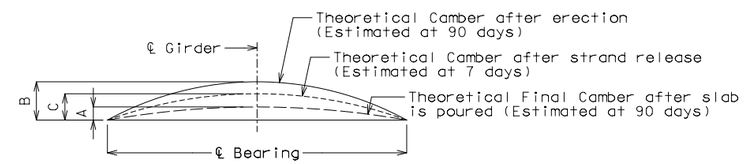

Girder	Span (1-2)			Span (2-3)			Span (3-4)		
	A	B	C	A	B	C	A	B	C
Exterior	3/8"	2 3/8"	2"	0"	2 1/4"	1 7/8"	3/8"	2 3/8"	2"
Interior	1/4"			0"			1/4"		

GIRDER CAMBER DIAGRAM

Conversion Factors for Girder Camber (Estimated at 90 days):

0.1 pt. = 0.314 x 0.5 pt.
0.2 pt. = 0.593 x 0.5 pt.
0.3 pt. = 0.813 x 0.5 pt.
0.4 pt. = 0.952 x 0.5 pt.

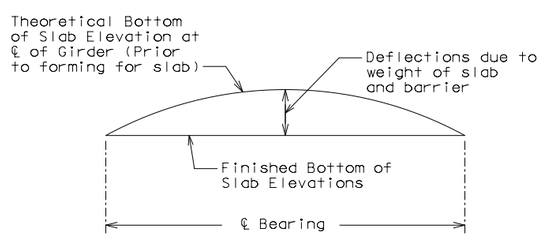

TYPICAL SLAB ELEVATIONS DIAGRAM

Detailed Feb. 2023
Checked Feb. 2023

Note: This drawing is not to scale. Follow dimensions.

Z:\22001 MoDOT McDonald County Route 90 Bridge\DGN\Bridge\final\Plotsheets\B_A9230_023_J7S0532_Camber_Haunch.dgn 3:25:16 PM 4/17/2023

FOR INFORMATION ONLY NOT FOR CONSTRUCTION

DATE PREPARED 4/17/2023
ROUTE 90 | STATE MO
DISTRICT BR | SHEET NO. 23
COUNTY McDONALD
JOB NO. J7S0532
CONTRACT ID.
PROJECT NO.
BRIDGE NO. A9230

DESCRIPTION | DATE

MISSOURI HIGHWAYS AND TRANSPORTATION COMMISSION
105 WEST CAPITOL
JEFFERSON CITY, MO 65102
1-888-ASK-MODOT (1-888-275-6636)

EFK•Moen
Civil Engineering Design
13523 Barrett Parkway Dr, Suite 250
St. Louis, MO 63021
314-394-3100
Missouri Certificate of Authority: 001578

IF A SEAL IS PRESENT ON THIS SHEET IT HAS BEEN ELECTRONICALLY SEALED AND DATED

REV.

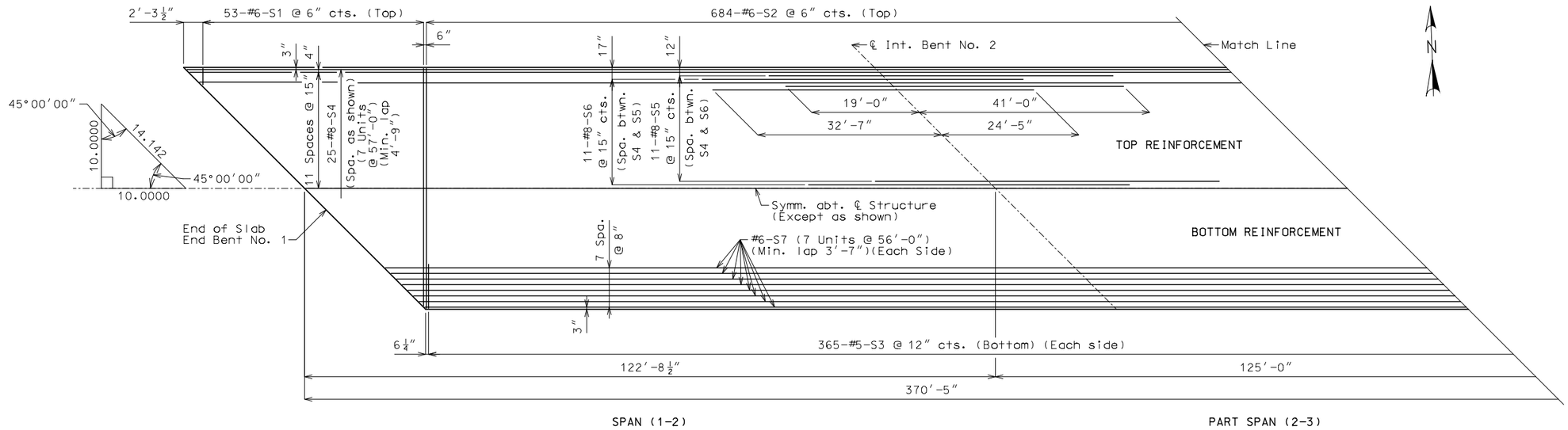

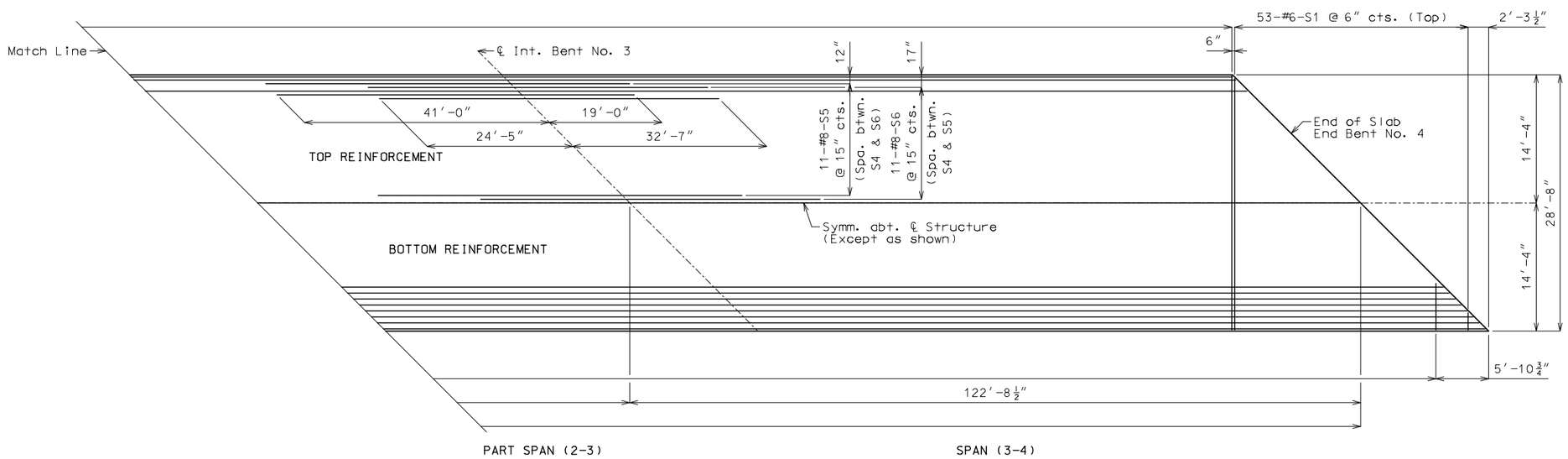

Notes:

Longitudinal slab dimensions are measured horizontally.

For Section Thru Slab and Slab Pouring Sequence, see Sheet No. 25.

For details and reinforcement of barrier not shown, see Sheet No. 27 & 28.

For Theoretical Slab Haunching Diagram, Theoretical Bottom of Slab Elevations, and Girder Camber Diagram, see Sheet No. 23.

For details of Precast Prestressed Panels, see Sheet No. 21.

For details and location of Slab Drains, see Sheet No. 22.

PLAN OF SLAB SHOWING REINFORCEMENT

Detailed Feb. 2023
Checked Feb. 2023

Note: This drawing is not to scale. Follow dimensions.

FOR INFORMATION ONLY NOT FOR CONSTRUCTION

DATE PREPARED	4/17/2023
ROUTE	90
STATE	MO
DISTRICT	BR
SHEET NO.	24
COUNTY	McDONALD
JOB NO.	J7S0532
CONTRACT ID.	
PROJECT NO.	
BRIDGE NO.	A9230

DATE	DESCRIPTION

IF A SEAL IS PRESENT ON THIS SHEET IT HAS BEEN ELECTRONICALLY SEALED AND DATED

MISSOURI HIGHWAYS AND TRANSPORTATION COMMISSION
105 WEST CAPITOL
JEFFERSON CITY, MO 65102
1-888-ASK-MODOT (1-888-275-6636)

EFK•Moen
Civil Engineering Design
13523 Barrett Parkway Dr, Suite 250
St. Louis, MO 63021
314-394-3100
Missouri Certificate of Authority: 001578

REV.

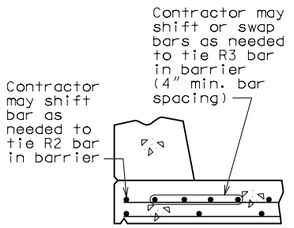

OPTIONAL SHIFTING TOP BARS AT BARRIER

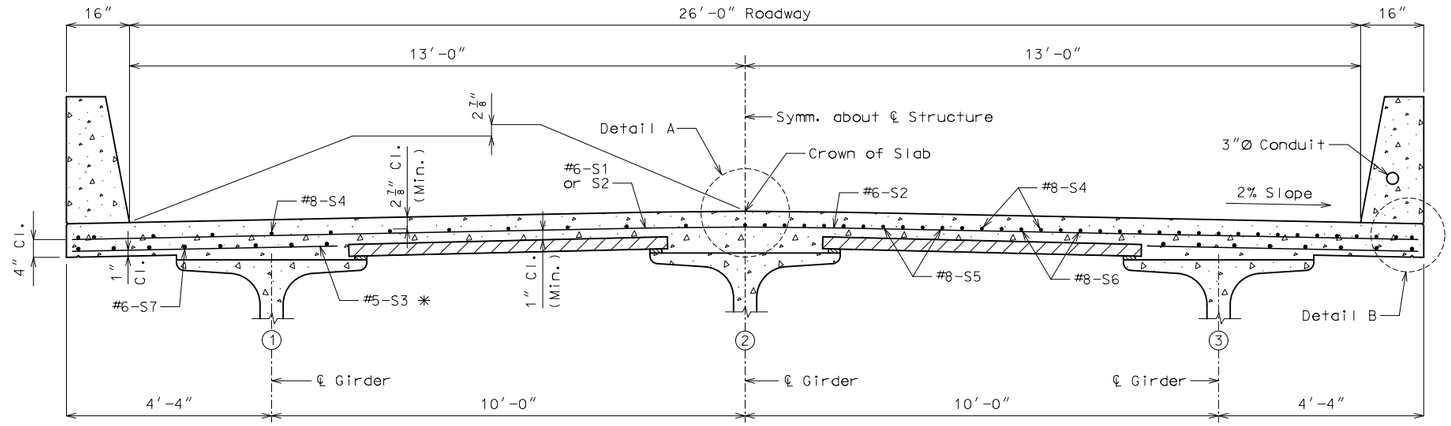

HALF SECTION NEAR MIDSPAN

HALF SECTION NEAR INTERMEDIATE BENT

SECTION THRU SLAB

✳ Alternate bar shape available, see barrier sheet.

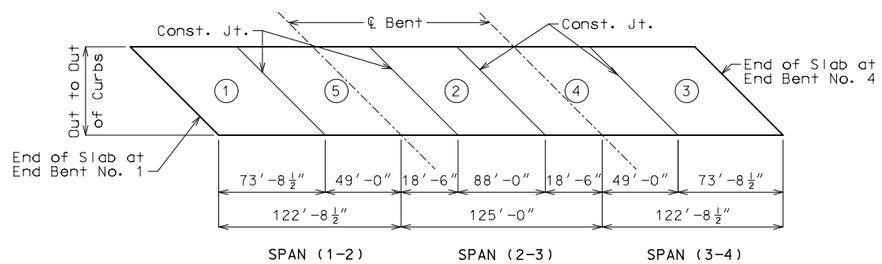

	Sequence of Pours					Min. Rate of Pour Cu. Yds./Hr.
	Direction					With Retarder
Basic Sequence	1	2	3	4	5	25
	Either Direction					
Alternate pours to the basic skip sequence are subject to the approval of the engineer in accordance with Sec 703.						
Alternate A Pours	1	5 + 2	4 + 3			25
	End to 5	1 to 4	2 to End			
Alternate B Pours	1 + 5 + 2	4 + 3				25
	End to 4	2 to End				
Alternate C Pours	1 + 5 + 2 + 4 + 3					25
	End to End					

The contractor shall pour and satisfactorily finish the slab pours at the rate given. Retarder, if used, shall be an approved type and retard the set of concrete to 2.5 hours.

SLAB POURING SEQUENCE

The concrete diaphragm at the intermediate bents and integral end bents shall be poured a minimum of 30 minutes and a maximum of 2 hours before the slab is poured.

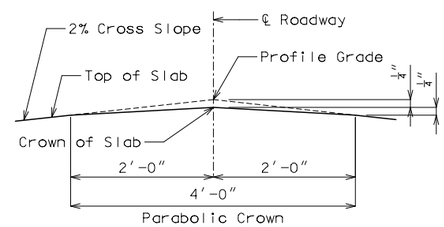

DETAIL A

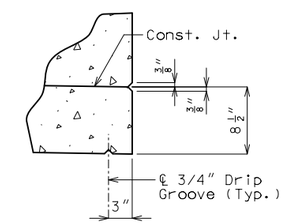

DETAIL B

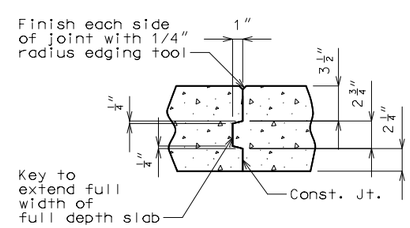

FULL DEPTH SLAB

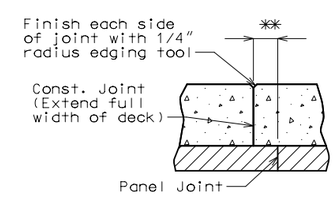

✳✳ Adjust the construction joint to a clearance of 6 inches minimum from the panel joint.

SLAB ON PANELS

SLAB CONSTRUCTION JOINT

Notes:

For details of Precast Prestressed Panels, see Sheet No. 21.

For details and reinforcement of barrier not shown, see Sheet No. 27 & 28.

For Theoretical Slab Haunching Diagram, Theoretical Bottom of Slab Elevations, and Girder Camber Diagram, see Sheet No. 23.

For Plan of Slab Showing Reinforcement, see Sheet No. 24.

SLAB DETAILS

Detailed Feb. 2023
Checked Feb. 2023

Note: This drawing is not to scale. Follow dimensions.

FOR INFORMATION ONLY NOT FOR CONSTRUCTION

DATE PREPARED	
4/17/2023	
ROUTE 90	STATE MO
DISTRICT BR	SHEET NO. 25
COUNTY McDONALD	
JOB NO. J7S0532	
CONTRACT ID.	
PROJECT NO.	
BRIDGE NO. A9230	

DATE	DESCRIPTION

IF A SEAL IS PRESENT ON THIS SHEET IT HAS BEEN ELECTRONICALLY SEALED AND DATED

MISSOURI HIGHWAYS AND TRANSPORTATION COMMISSION
105 WEST CAPITOL
JEFFERSON CITY, MO 65102
1-888-ASK-MODOT (1-888-275-6636)

EFK•Moen
Civil Engineering Design
13523 Barrett Parkway Dr, Suite 250
St. Louis, MO 63021
314-394-3100
Missouri Certificate of Authority: 001578

REV.

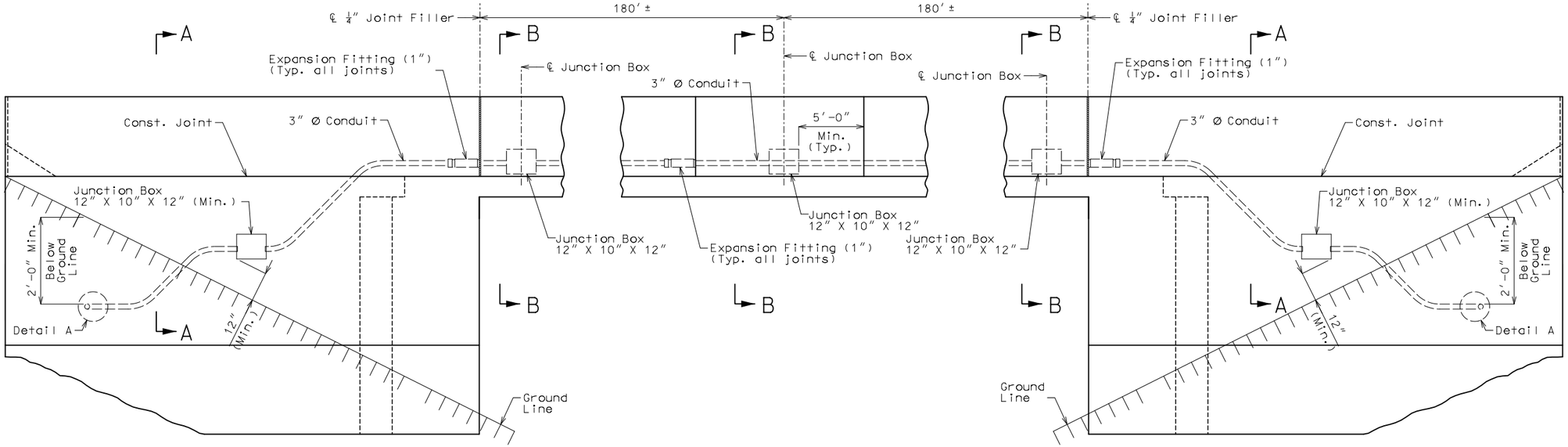

PART ELEVATION OF JUNCTION BOX IN RIGHT BARRIER AND WINGWALLS

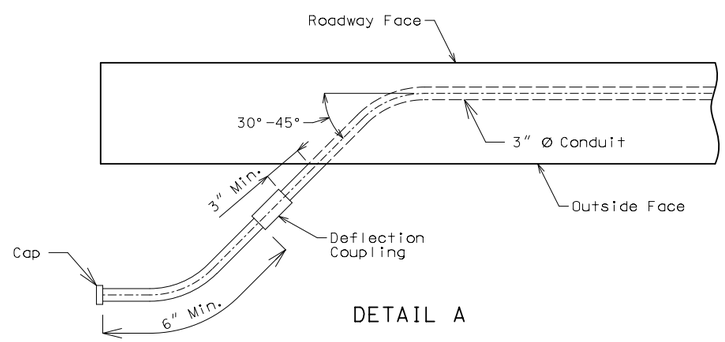

DETAIL A

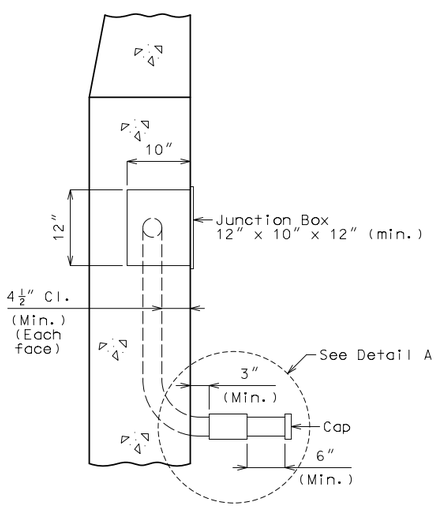

PART SECTION A-A

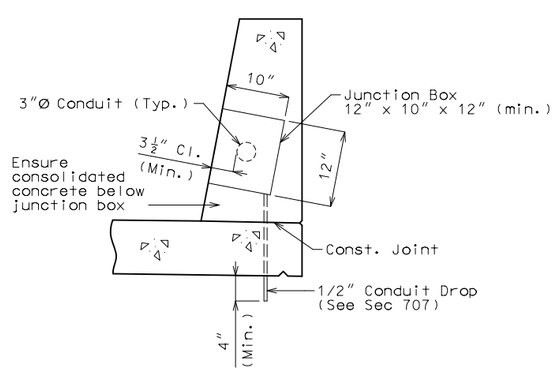

PART SECTION B-B

Notes:

All conduit shall be rigid non-metallic Schedule 40 heavy wall PVC (polyvinyl chloride plastic) with 3 1/2-inch minimum cover in barrier and 4 1/2-inch minimum cover in abutment wing. Each section of conduit shall bear the Underwriters' Laboratories, Inc., (UL) label.

Shift reinforcing steel in field where necessary to clear conduit and junction boxes.

Expansion fittings shall be placed as shown and set in accordance with the manufacturer's requirements and based on the air temperature at the time of setting given an estimated total expansion movement of 1 inch at filled joints using a maxiumum temperature range of 120°F and a maxiumum temperature of 110°F.

Placement of junction boxes and covers, complete in place, shall be flush with the roadway face of the barrier. Junction boxes and covers may be recessed up to ¼".

Drainage shall be provided at low points or other critical locations of all conduits and all junction boxes in accordance with Sec 707. All conduits shall be sloped to drain where possible.

Junction box size shown on plan may require special order. No other size may be substituted.

MoDOT Construction Personnel: Indicate in field and on bridge plans for future work the exact location of buried conduit at ends of bridge that are capped and not immediately used.

Payment for furnishing and installing Conduit System, complete-in-place, will be considered completely covered by the contract lump sum price for Conduit System on Structure.

DETAILS OF CONDUIT SYSTEM

Detailed Feb. 2023
Checked Feb. 2023

Note: This drawing is not to scale. Follow dimensions.

FOR INFORMATION ONLY NOT FOR CONSTRUCTION

DATE PREPARED	4/28/2023
ROUTE	90
STATE	MO
DISTRICT	BR
SHEET NO.	26
COUNTY	McDONALD
JOB NO.	J7S0532
CONTRACT ID.	
PROJECT NO.	
BRIDGE NO.	A9230

DESCRIPTION

DATE

MISSOURI HIGHWAYS AND TRANSPORTATION COMMISSION

105 WEST CAPITOL
JEFFERSON CITY, MO 65102
1-888-ASK-MODOT (1-888-275-6636)

EFK•Moen
Civil Engineering Design
13523 Barrett Parkway Dr. Suite 250
St. Louis, MO 63021
314-394-3100
Missouri Certificate of Authority: 001578

IF A SEAL IS PRESENT ON THIS SHEET IT HAS BEEN ELECTRONICALLY SEALED AND DATED

REV.

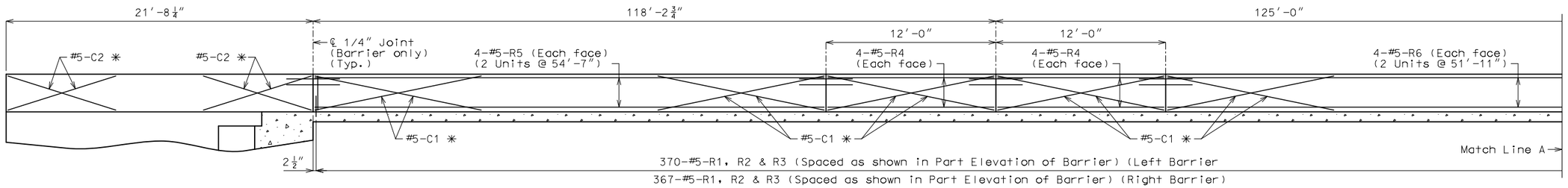

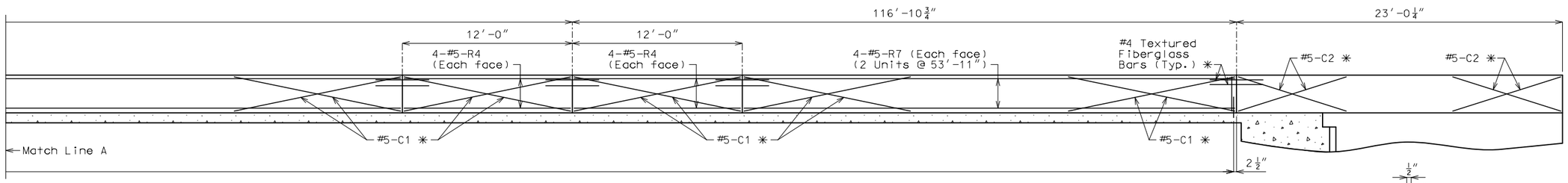

ELEVATION OF BARRIER

(Left barrier shown, right barrier similar)
Longitudinal dimensions are horizontal.

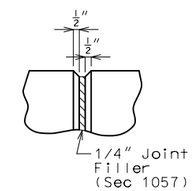

PART ELEVATION AT FORMED JOINT

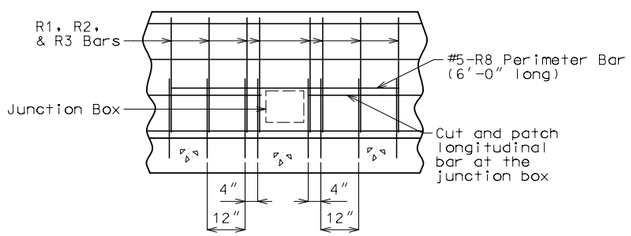

PART ELEVATION OF BARRIER AT JUNCTION BOXES

Perimeter bar (#5-R8) is not required at end bent junction boxes.

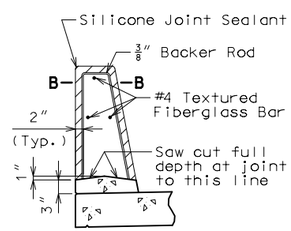

SECTION THRU SAW CUT JOINT

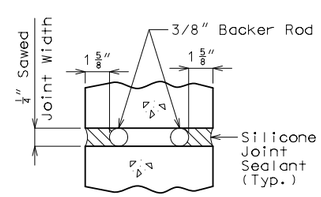

SECTION B-B

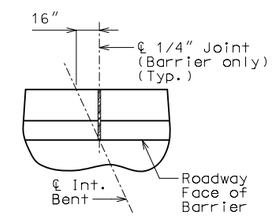

PART PLAN SHOWING JOINT LOCATION

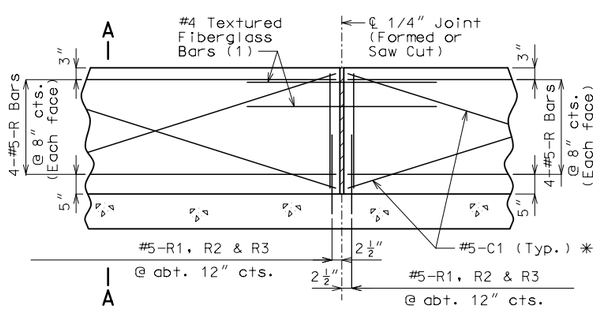

PART ELEVATION OF BARRIER

(1) Four feet long, centered on joint, slip-formed option only

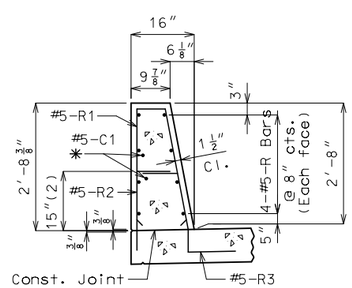

SECTION A-A

Use a minimum lap of 3′-1″ for #5 horizontal barrier bars.

The cross-sectional area above the slab is 2.89 square feet.

(2) To top of bar

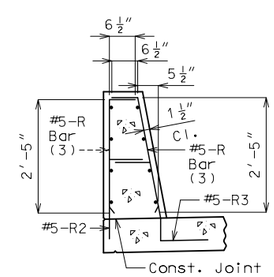

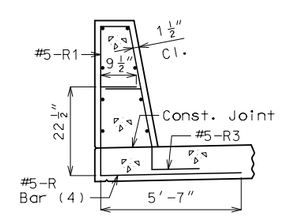

R-BAR PERMISSIBLE ALTERNATE SHAPE

(3) The R1 bar may be separated into two bars as shown, at the contractor's option, only when slip forming is not used. (All dimensions are out to out.)

(4) The R2 bar and #5 bottom transverse slab bar in cantilever (prestressed panels only) combination may be furnished as one bar as shown, at the contractor's option.

General Notes:

✳ Slip-formed option only.

Conventional forming or slip forming may be used. Saw cut joints may be used with conventional forming.

Top of barrier shall be built parallel to grade and barrier joints (except at end bents) normal to grade.

All exposed edges of barrier shall have either a 1/2-inch radius or a 3/8-inch bevel, unless otherwise noted.

Payment for all concrete and reinforcement, complete in place, will be considered completely covered by the contract unit price for Type H Barrier per linear foot.

Concrete in barrier shall be Class B-1.

Measurement of barrier is to the nearest linear foot for each structure, measured along the outside top of slab from end of wing to end of wing.

Concrete traffic barrier delineators shall be placed on top of the barrier as shown on Missouri Standard Plan 617.10 and in accordance with Sec 617. Delineators on bridges with two-lane, two-way traffic shall have retroreflective sheeting on both sides. Concrete traffic barrier delineators will be considered completely covered by the contract unit price for Type H Barrier.

Joint sealant and backer rods shall be in accordance with Sec 717 for silicone joint sealant for saw cut and formed joints.

For slip-formed option, both sides of barrier shall have a vertically broomed finish and the top shall have a transversely broomed finish.

TYPE H BARRIER

Detailed Feb. 2023
Checked Feb. 2023

Note: This drawing is not to scale. Follow dimensions.

FOR INFORMATION ONLY NOT FOR CONSTRUCTION

DATE PREPARED	
4/28/2023	
ROUTE 90	STATE MO
DISTRICT BR	SHEET NO. 27
COUNTY McDONALD	
JOB NO. J7S0532	
CONTRACT ID.	
PROJECT NO.	
BRIDGE NO. A9230	

DESCRIPTION	DATE

IF A SEAL IS PRESENT ON THIS SHEET IT HAS BEEN ELECTRONICALLY SEALED AND DATED

MISSOURI HIGHWAYS AND TRANSPORTATION COMMISSION
105 WEST CAPITOL
JEFFERSON CITY, MO 65102
1-888-ASK-MODOT (1-888-275-6636)

EFK•Moen
Civil Engineering Design
13523 Barrett Parkway Dr. Suite 250
St. Louis, MO 63021
314-394-3100
Missouri Certificate of Authority: 001578

REV.

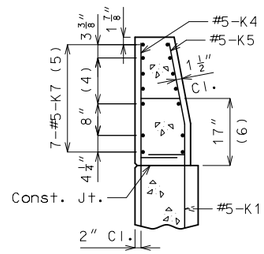

SECTION A-A

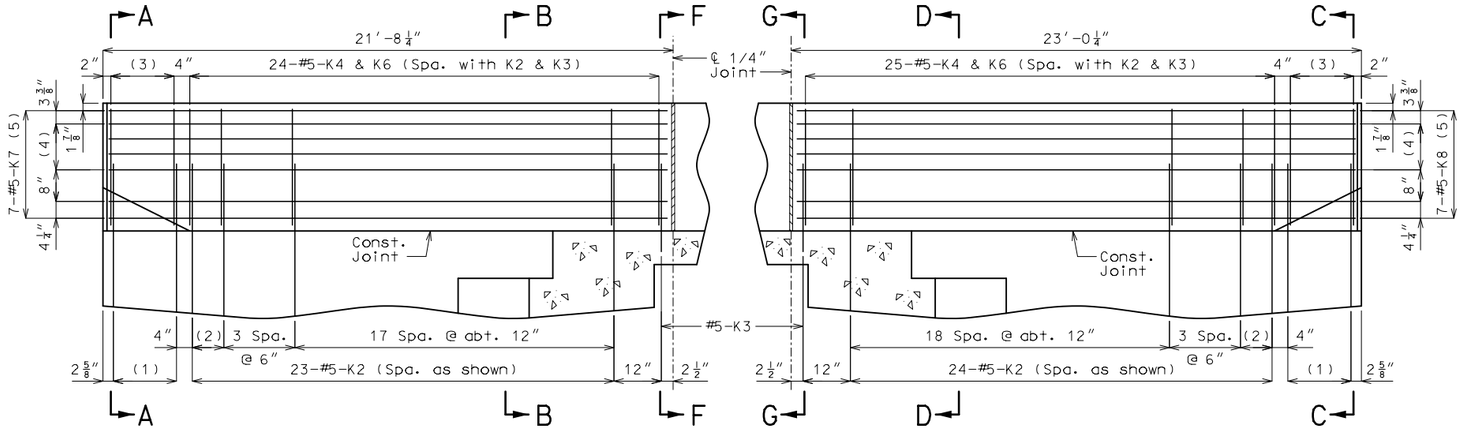

PART ELEVATION

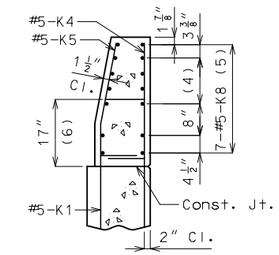

SECTION C-C

(1) 5-#5-K1 @ 4" cts.
(2) 2 Spaces @ 4"
(3) 5-#5-K4 and 5-#5-K5, spaced with K1
(4) 3 Spaces @ 3 13/16"
(5) Spaced as shown, each face
(6) To top of bar

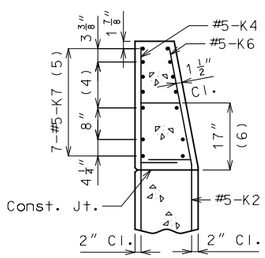

SECTION B-B

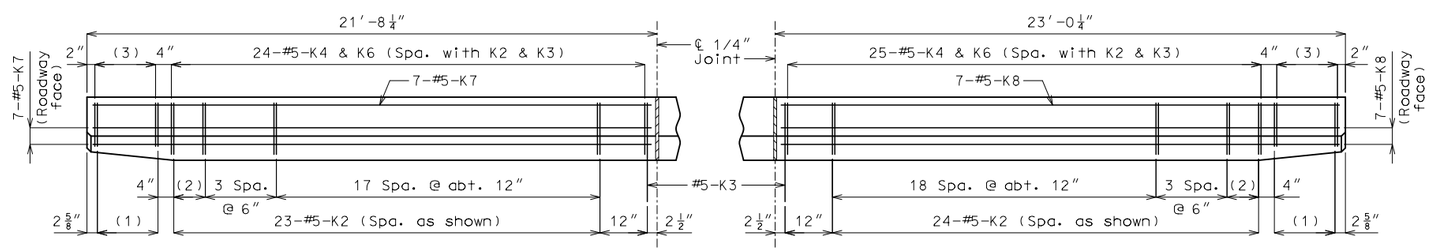

PART PLAN

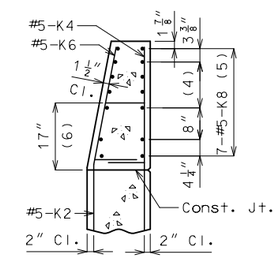

SECTION D-D

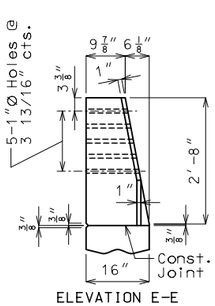

ELEVATION E-E

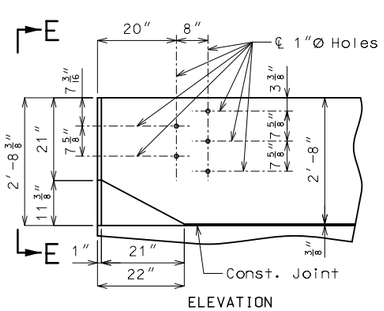

ELEVATION

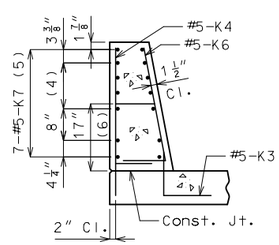

SECTION F-F

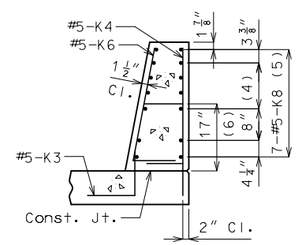

SECTION G-G

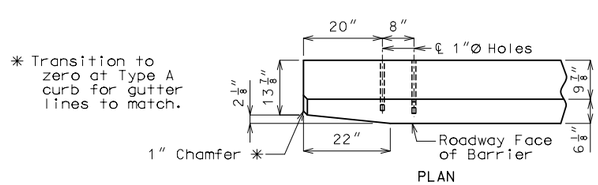

PLAN

DETAILS OF GUARD RAIL ATTACHMENT

General Notes:

Concrete traffic barrier delineators shall be placed on top of the barrier as shown on Missouri Standard Plan 617.10 and in accordance with Sec 617. Delineators on bridges with two-lane, two-way traffic shall have retroreflective sheeting on both sides. Concrete traffic barrier delineators will be considered completely covered by the contract unit price for Type H Barrier.

Reinforcing Steel:

Minimum clearance to reinforcing steel shall be 1 1/2" except as shown for bars embedded into end bent.

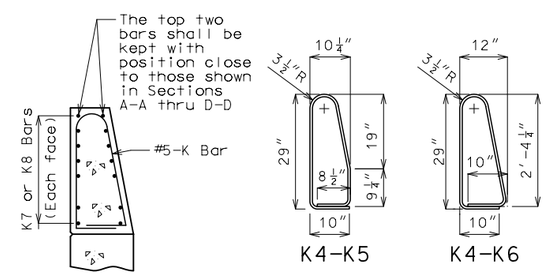

PERMISSIBLE ALTERNATE SHAPES

(Other K bars not shown for clarity)

The K4-K5 and K4-K6 bar combination may be furnished as one bar as shown, at the contractor's option.

All dimensions are out to out.

TYPE H BARRIER AT END BENTS

(Left barrier shown, right barrier similar)

Detailed Feb. 2023
Checked Feb. 2023

Note: This drawing is not to scale. Follow dimensions.

FOR INFORMATION ONLY NOT FOR CONSTRUCTION

DATE PREPARED	
4/17/2023	
ROUTE 90	STATE MO
DISTRICT BR	SHEET NO. 28
COUNTY McDONALD	
JOB NO. J7S0532	
CONTRACT ID.	
PROJECT NO.	
BRIDGE NO. A9230	

DATE	DESCRIPTION

MISSOURI HIGHWAYS AND TRANSPORTATION COMMISSION
105 WEST CAPITOL
JEFFERSON CITY, MO 65102
1-888-ASK-MODOT (1-888-275-6636)

EFK•Moen
Civil Engineering Design
13523 Barrett Parkway Dr, Suite 250
St. Louis, MO 63021
314-394-3100
Missouri Certificate of Authority: 001578

IF A SEAL IS PRESENT ON THIS SHEET IT HAS BEEN ELECTRONICALLY SEALED AND DATED

REV.

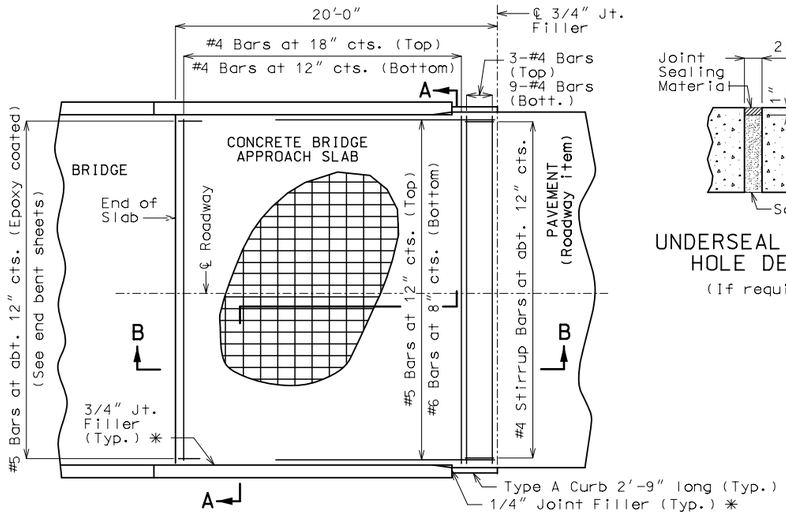

PART PLAN OF SQUARED STRUCTURE
(Skewed structure similar)

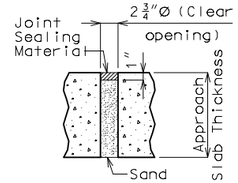

UNDERSEAL ACCESS HOLE DETAIL
(If required)

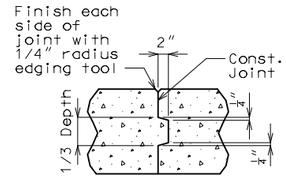

CONSTRUCTION JOINT DETAIL

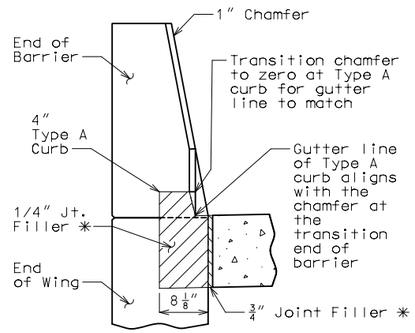

SECTION BETWEEN CURB AND BARRIER

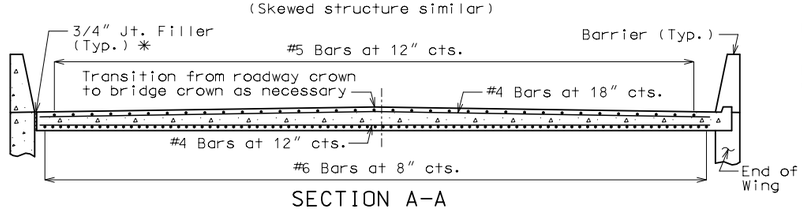

SECTION A-A

With the approval of the engineer, the contractor may crown the bottom of the approach slab to match the crown of the roadway surface.

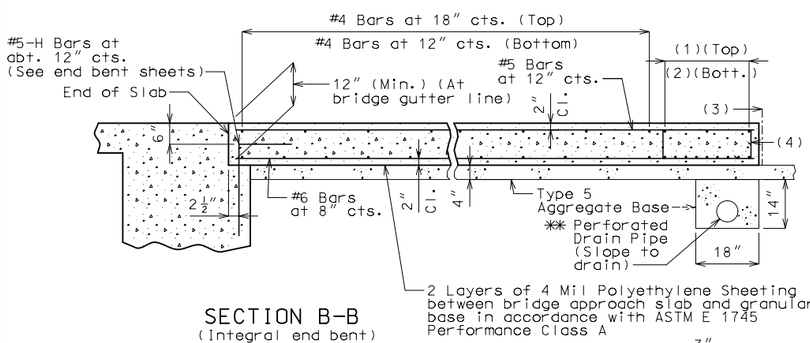

(1) 3-#4 Bars
(2) 9-#4 Bars
(3) ℄ 3/4" Jt. Filler
(4) #4 Stirrup Bars at abt. 12" cts.; 2'-0"x 8" (Min.) out to out; Actual length = 5'-10" (Min.); 90° stirrup hook at bottom; Stirrup height (8") and actual length vary due to crown.

SECTION B-B
(Integral end bent)

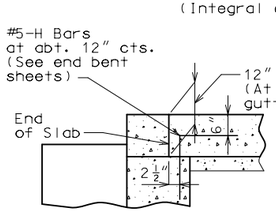

PART SECTION B-B
(Non-integral end bent)

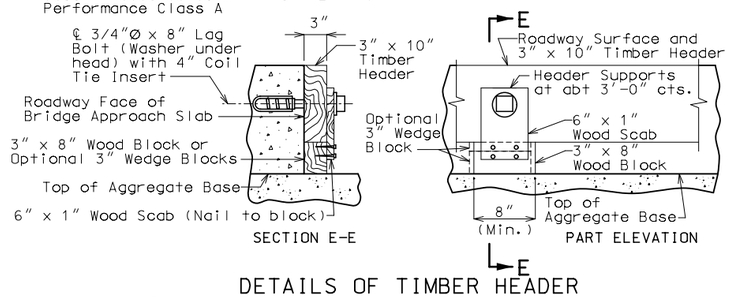

DETAILS OF TIMBER HEADER
Remove timber header when concrete pavement is placed.

OPTIONAL CONCRETE SLAB

Notes For Concrete Slab Only:

All concrete for the bridge approach slab shall be in accordance with Sec 503 (f'c = 4,000 psi).

The reinforcing steel in the bridge approach slab shall be epoxy coated Grade 60 with fy = 60,000 psi.

Longitudinal construction joints in bridge approach slab shall be aligned with longitudinal construction joints in bridge slab.

Minimum clearance to reinforcing steel shall be 1 1/2", unless otherwise shown.

The reinforcing steel in the bridge approach slab shall be continuous. The transverse reinforcing steel may be made continuous by lap splicing the #4 bars 29" or by mechanical bar splice.

Mechanical bar splices shall be in accordance with Sec 710.

All joint filler shall be in accordance with Sec 1057 for preformed fiber expansion joint filler except as noted.

Payment for furnishing all materials, labor and excavation necessary to construct the concrete bridge approach slab, including the timber header, underdrain, Type 5 aggregate base, joint filler, and all other appurtenances and incidental work as shown on this sheet, complete in place, will be considered completely covered by the contract unit price for Bridge Approach Slab (Minor) per square yard.

See Missouri Standard Plan 609.00 for details of Type A curb.

✱ Seal joint between vertical face of approach slab and wing with sealant in accordance with Sec 717 for silicone joint sealant for saw cut and formed joints.

✱✱ Redirect drain pipe under sleeper slab and then turn to daylight. Drain pipe under sleeper slab to daylight is to be nonperforated.

General Notes:

Contractor shall have the option to construct either slab except as noted.

The contractor shall pour and satisfactorily finish the bridge slab before placing the bridge approach slab.

Drain pipe may be either 6" diameter corrugated metallic-coated pipe underdrain, 4" diameter corrugated polyvinyl chloride (PVC) drain pipe, or 4" diameter corrugated polyethylene (PE) drain pipe.

MoDOT Construction personnel will indicate the bridge approach slab used for this structure:

☐ Concrete Bridge Approach Slab
☐ Asphalt Bridge Approach Slab

Notes For Asphalt Slab Only:

Payment for furnishing all materials, labor and excavation necessary to construct the asphalt bridge approach slab, including tack, curb, underdrain and Type 5 aggregate base within the pay limits shown, complete in place, will be considered completely covered by the contract unit price for Bridge Approach Slab (Minor) per square yard.

Application of tack is required between lifts per Sec 403.

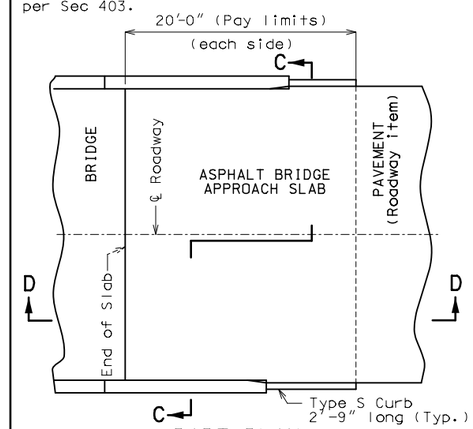

PART PLAN
(Squared structure shown, skewed structure similar)

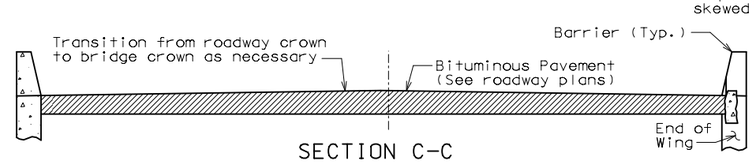

SECTION C-C

With the approval of the engineer, the contractor may crown the bottom of the approach slab to match the crown of the roadway surface.

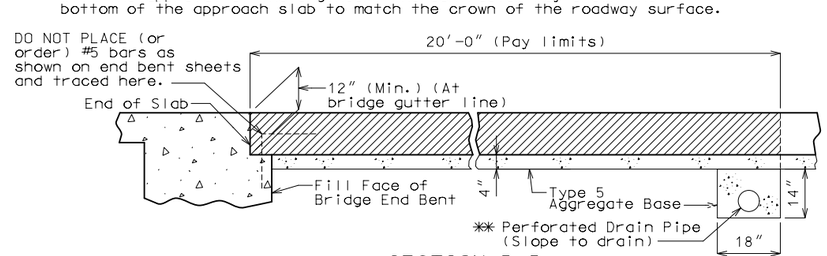

SECTION D-D

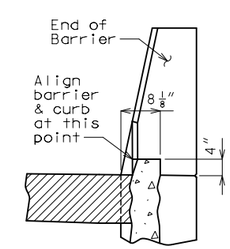

4" TYPE S CURB
See Missouri Standard Plan 609.00 for details of Type S curb.

OPTIONAL ASPHALT SLAB (NOT ALLOWED WITH CONCRETE PAVEMENT)

BRIDGE APPROACH SLAB (MINOR)

Integral end bents shown, non-integral end bent similar.

FOR INFORMATION ONLY NOT FOR CONSTRUCTION

DATE PREPARED	
4/17/2023	
ROUTE 90	STATE MO
DISTRICT BR	SHEET NO. 29
COUNTY McDONALD	
JOB NO. J7S0532	
CONTRACT ID.	
PROJECT NO.	
BRIDGE NO. A9230	

DATE	DESCRIPTION

IF A SEAL IS PRESENT ON THIS SHEET IT HAS BEEN ELECTRONICALLY SEALED AND DATED

MISSOURI HIGHWAYS AND TRANSPORTATION COMMISSION
105 WEST CAPITOL
JEFFERSON CITY, MO 65102
1-888-ASK-MODOT (1-888-275-6636)

EFK•Moen
Civil Engineering Design
13523 Barrett Parkway Dr, Suite 250
St. Louis, MO 63021
314-394-3100
Missouri Certificate of Authority: 001578

Detailed Feb. 2023
Checked Feb. 2023

Note: This drawing is not to scale. Follow dimensions.

REV.

BILL OF REINFORCING STEEL

NO. REQ'D.	MARK NO. SIZE	MARK NO. MARK	LOCATION	EPOXY (E)	SHAPE NO.	STIRRUP (S)	SUBSTR. (X)	VARIES (V)	NO. EACH	B FT.	B IN.	C FT.	C IN.	D FT.	D IN.	E FT.	E IN.	F FT.	F IN.	H FT.	H IN.	K FT.	K IN.	NOMINAL LENGTH FT.	NOMINAL LENGTH IN.	ACTUAL LENGTH FT.	ACTUAL LENGTH IN.	WEIGHT LBS.
			SUBSTRUCTURE																									
			INT. BENT 2																									
16	8	D200	KEY		20		X			2	6.000													2	6	2	6	107
11	10	H200	BEAM		20		X			33	3.000													33	3	33	3	1574
12	6	H201	BEAM		20		X			33	3.000													33	3	33	3	599
11	10	H202	BEAM		18		X			33	3.000													36	1	36	1	1708
6	6	H203	BEAM		20		X			5	9.000													5	9	5	9	52
16	6	H204	BEAM		10	S	X					22.000	3	11.000										7	7	7	3	174
78	4	P200	DRILLED SHAFT		16		X			3	0.000													11	9	11	9	612
84	6	U200	BEAM		13	S	X			3	0.000	4	2.000	3	0.000	4	2.000							15	8	15	2	1914
28	6	U201	BEAM		10	S	X					4	2.000	3	0.000									11	4	11	0	463
16	6	U202	BEAM		13	S	X			3	0.000	4	5.000	3	0.000	4	5.000							16	2	15	8	377
38	9	V200	DRILLED SHAFT		20		X			42	0.000													42	0	42	0	5426
			INT. BENT 3																									
14	8	D300	KEY		20		X			2	6.000													2	6	2	6	93
11	10	H300	BEAM		20		X			33	3.000													33	3	33	3	1574
12	6	H301	BEAM		20		X			33	3.000													33	3	33	3	599
11	10	H302	BEAM		18		X			33	3.000													36	1	36	1	1708
16	6	H303	BEAM		10	S	X					22.000	3	11.000										7	7	7	3	174
76	4	P300	DRILLED SHAFT		16		X			3	0.000													11	9	11	9	597
94	6	U300	BEAM		13	S	X			3	0.000	4	2.000	3	0.000	4	2.000							15	8	15	2	2141
28	6	U301	BEAM		10	S	X					4	2.000	3	0.000									11	4	11	0	463
38	9	V300	DRILLED SHAFT		20		X			40	5.000													40	5	40	5	5222
			SUPERSTR.																									
			END BENT 1																									
13	6	F100	WING	E	23	S				2	3.000	4	0.000		14.000		12.875		5.375	2	1.000		10.375	7	5	7	3	142
6	6	F101	DIAPHRAGM	E	21	S				4	9.000			6	1.750					3	4.250	3	4.250	10	11	10	10	98
12	6	F102	WING	E	23	S					14.000	9	9.125	2	3.000		10.375	2	1.000		5.375		12.875	13	2	13	2	237
6	6	F103	DIAPHRAGM	E	21	S				4	9.000	9	0.375							3	4.250	3	4.250	13	9	13	1	118
10	6	H100	BEAM & DIAPH	E	20					40	3.000													40	3	40	3	605
12	8	H101	BEAM & DIAPH	E	20					40	3.000													40	3	40	3	1290
10	6	H102	DIAPHRAGM	E	20					13	1.000													13	1	13	1	197
2	6	H103	DIAPHRAGM	E	20					9	3.000													9	3	9	3	28
10	6	H104	DIAPHRAGM	E	20					5	6.000													5	6	5	6	83
2	6	H105	DIAPHRAGM	E	20					3	7.000													3	7	3	7	11
16	8	H106	WING	E	20					19	0.000													19	0	19	0	812
52	8	H107	WING	E	20					18	2.000													18	2	18	2	2522
3	5	H108	STRAND TIE	E	23	S					15.000	3	2.375		15.000		10.625		10.625		10.625		10.625	5	8	5	8	18
14	5	U100	BEAM	E	10	S						6	6.000	4	10.000									17	10	17	7	257
30	5	U101	BEAM	E	13	S				4	10.000	2	8.000	4	10.000	2	8.000							15	11	15	7	488
30	5	U102	BEAM	E	10	S						2	11.000	4	10.000									10	8	10	5	326
50	6	U103	DIAPHRAGM	E	19	S				3	4.000	6	6.000											9	10	9	8	726
26	5	U104	DIAPHRAGM	E	10	S						5	7.000	4	1.000									15	3	15	0	407
26	6	U105	DIAPHRAGM	E	19	S				4	5.000	4	10.000											9	3	9	1	355
26	5	U106	DIAPHRAGM	E	19					2	0.000		15.000											3	3	3	1	84

BILL OF REINFORCING STEEL

NO. REQ'D.	MARK NO. SIZE	MARK NO. MARK	LOCATION	EPOXY (E)	SHAPE NO.	STIRRUP (S)	SUBSTR. (X)	VARIES (V)	NO. EACH	B FT.	B IN.	C FT.	C IN.	D FT.	D IN.	E FT.	E IN.	F FT.	F IN.	H FT.	H IN.	K FT.	K IN.	NOMINAL LENGTH FT.	NOMINAL LENGTH IN.	ACTUAL LENGTH FT.	ACTUAL LENGTH IN.	WEIGHT LBS.
24	5	V100	BEAM	E	20					6	6.000													6	6	6	6	163
21	6	V101	DIAPHRAGM	E	20					4	6.000													4	6	4	6	142
2	6	V102	WING	E	20					8	9.000													8	9	8	9	26
34	6	V103	WING	E	20					8	10.000													8	10	8	10	451
2	6	V104	WING	E	20					8	6.000													8	6	8	6	26
32	6	V105	WING	E	20					8	7.000													8	7	8	7	413
			END BENT 4																									
13	6	F400	WING	E	23	S				2	3.000	4	0.000		14.000		12.875		5.375	2	1.000		10.375	7	5	7	3	142
6	6	F401	DIAPHRAGM	E	21	S				4	9.000			6	1.750					3	4.250	3	4.250	10	11	10	10	98
12	6	F402	WING	E	23	S					14.000	9	9.125	2	3.000		10.375	2	1.000		5.375		12.875	13	2	13	2	237
6	6	F403	DIAPHRAGM	E	21	S				4	9.000	9	0.375							3	4.250	3	4.250	13	9	13	1	118
10	6	H400	BEAM & DIAPH	E	20					40	3.000													40	3	40	3	605
12	8	H401	BEAM & DIAPH	E	20					40	3.000													40	3	40	3	1290
10	6	H402	DIAPHRAGM	E	20					13	1.000													13	1	13	1	197
2	6	H403	DIAPHRAGM	E	20					9	4.000													9	4	9	4	28
10	6	H404	DIAPHRAGM	E	20					5	6.000													5	6	5	6	83
2	6	H405	DIAPHRAGM	E	20					3	7.000													3	7	3	7	11
16	8	H406	WING	E	20					19	0.000													19	0	19	0	812
52	8	H407	WING	E	20					18	2.000													18	2	18	2	2522
3	5	H408	STRAND TIE	E	23	S					15.000	3	2.375		15.000		10.625		10.625		10.625		10.625	5	8	5	8	18
14	5	U400	BEAM	E	10	S						6	6.000	4	10.000									17	10	17	7	257
30	5	U401	BEAM	E	13	S				4	10.000	2	8.000	4	10.000	2	8.000							15	11	15	7	488
50	6	U402	DIAPHRAGM	E	19	S				3	4.000	6	6.000											9	10	9	8	726
26	5	U403	DIAPHRAGM	E	10	S						5	7.000	4	1.000									15	3	15	0	407
26	6	U404	DIAPHRAGM	E	19	S				4	5.000	4	10.000											9	3	9	1	355
26	5	U405	DIAPHRAGM	E	19					2	0.000		15.000											3	3	3	1	84
24	5	V400	BEAM	E	20					6	6.000													6	6	6	6	163
21	6	V401	DIAPHRAGM	E	20					4	6.000													4	6	4	6	142
2	6	V402	WING	E	20					8	9.000													8	9	8	9	26
34	6	V403	WING	E	20					8	10.000													8	10	8	10	451
2	6	V404	WING	E	20					8	7.000													8	7	8	7	26
32	6	V405	WING	E	20					8	8.000													8	8	8	8	417
			DIAPH. AT																									
			INT. BENTS																									
8	6	H220	DIAPHRAGM	E	20					9	1.000													9	1	9	1	109
8	6	H221	DIAPHRAGM	E	20					12	11.000													12	11	12	11	155
40	4	H222	DIAPHRAGM	E	20					12	11.000													12	11	12	11	345
4	5	H223	STRAND TIE	E	23	S					15.000	3	3.000		15.000		10.625		10.625		10.625		10.625	5	9	5	8	24
8	5	H224	STRAND TIE	E	23	S					15.000	3	3.000								10.625		10.625	4	6	4	6	38
48	4	U220	DIAPHRAGM	E	28	S							23.000	5	7.000		18.000							9	0	8	10	283
16	6	U221	DIAPHRAGM	E	28	S						4	11.000	5	9.000	2	2.000							12	10	12	6	300
16	6	U222	DIAPHRAGM	E	28	S						4	11.000	4	10.000	2	2.000							11	11	11	7	278
16	6	U223	DIAPHRAGM	E	28	S						1	10.000	4	10.000	2	2.000							8	10	8	6	204
8	5	U224	DIAPHRAGM	E	6	S				4	6.000		12.000											5	6	5	5	45
40	5	U225	DIAPHRAGM	E	6	S				4	6.000		12.000		18.000									7	0	6	9	282
16	5	V220	DIAPHRAGM	E	20					5	9.000													5	9	5	9	96

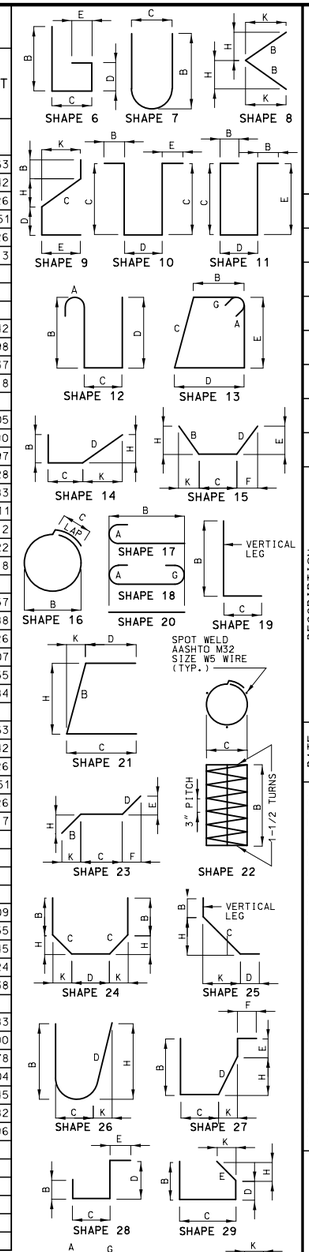

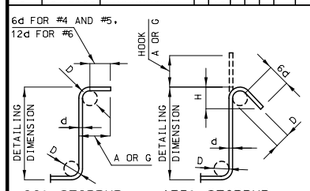

STIRRUP HOOK DIMENSIONS				
GRADES 40 - 50 - 60 KSI				
BAR SIZE	D (IN.)	90° HOOK: HOOK A OR G	135° HOOK: HOOK A OR G	135° HOOK: APPROX. H
#4	2"	4 1/2"	4 1/2"	3"
#5	2 1/2"	6"	5 1/2"	3 3/4"
#6	4 1/2"	12"	8"	4 1/2"

NOTE: UNLESS OTHERWISE NOTED, DIAMETER "D" IS THE SAME FOR ALL BENDS AND HOOKS ON A BAR.

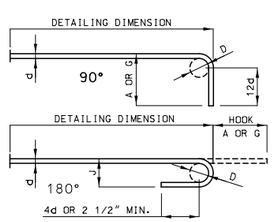

END HOOK DIMENSIONS				
BAR SIZE	D (IN.)	ALL GRADES: 180° HOOKS: A OR G	ALL GRADES: 180° HOOKS: J	ALL GRADES: 90° HOOKS: A OR G
#3	2 1/4"	5"	3"	6"
#4	3"	6"	4"	8"
#5	3 3/4"	7"	5"	10"
#6	4 1/2"	8"	6"	12"
#7	5 1/4"	10"	7"	14"
#8	6"	11"	8"	16"
#9	9 1/2"	15"	11 3/4"	19"
#10	10 3/4"	17"	13 1/4"	22"
#11	12"	19"	14 3/4"	2'-0"
#14	18 1/4"	2'-3"	21 3/4"	2'-7"

NOTE:

ALL STANDARD HOOKS AND BENDS OTHER THAN 180 DEGREE ARE TO BE BENT WITH SAME PROCEDURE AS FOR 90 DEGREE STANDARD HOOKS.

HOOKS AND BENDS SHALL BE IN ACCORDANCE WITH THE PROCEDURES AS SHOWN ON THIS SHEET.

E = EPOXY COATED REINFORCEMENT.
S = STIRRUP.
X = BAR IS INCLUDED IN SUBSTRUCTURE QUANTITIES.
V = BAR DIMENSIONS VARY IN EQUAL INCREMENTS BETWEEN DIMENSIONS SHOWN ON THIS LINE AND THE FOLLOWING LINE.
NO. EA. = NUMBER OF BARS OF EACH LENGTH.

NOMINAL LENGTHS ARE BASED ON OUT TO OUT DIMENSIONS SHOWN IN BENDING DIAGRAMS AND ARE LISTED FOR FABRICATORS USE. (NEAREST INCH)

ACTUAL LENGTHS ARE MEASURED ALONG CENTERLINE BAR TO THE NEAREST INCH.

PAYWEIGHTS ARE BASED ON ACTUAL LENGTHS.

FOUR ANGLE OR CHANNEL SPACERS ARE REQUIRED FOR EACH COLUMN SPIRAL. SPACERS ARE TO BE PLACED ON INSIDE OF SPIRALS. LENGTH AND WEIGHT OF COLUMN SPIRALS DO NOT INCLUDE SPLICES OR SPACERS.

REINFORCING STEEL (GRADE 60) FY = 60,000 PSI.

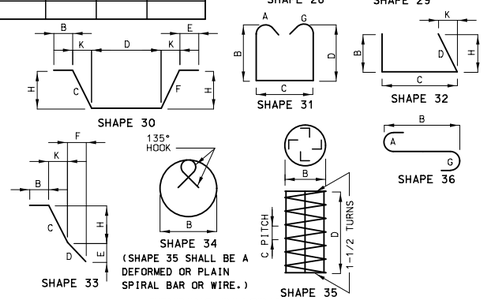

BENDING DIAGRAMS

FOR INFORMATION ONLY NOT FOR CONSTRUCTION

DATE PREPARED: 4/17/2023
ROUTE: 90 STATE: MO
DISTRICT: BR SHEET NO.: 30
COUNTY: McDONALD
JOB NO.: J7S0532
CONTRACT ID.
PROJECT NO.
BRIDGE NO.: A9230

DESCRIPTION | DATE

IF A SEAL IS PRESENT ON THIS SHEET IT HAS BEEN ELECTRONICALLY SEALED AND DATED

MISSOURI HIGHWAYS AND TRANSPORTATION COMMISSION
105 WEST CAPITOL
JEFFERSON CITY, MO 65102
1-888-ASK-MODOT (1-888-275-6636)

EFK•Moen
Civil Engineering Design
13523 Barrett Parkway Dr. Suite 250
St. Louis, MO 63021
314-394-3100
Missouri Certificate of Authority: 001578

REV.

Detailed Feb. 2023
Checked Feb. 2023

Note: This drawing is not to scale. Follow dimensions.

BILL OF REINFORCING STEEL

NO. REQ'D.	MARK NO. SIZE	MARK	LOCATION	EPOXY (E)	SHAPE NO.	STIRRUP (S)	SUBSTR. (X)	VARIES (V)	NO. EACH	B FT. IN.	C FT. IN.	D FT. IN.	E FT. IN.	F FT. IN.	H FT. IN.	K FT. IN.	NOMINAL LENGTH FT. IN.	ACTUAL LENGTH FT. IN.	WEIGHT LBS.
			SLAB																
106	6	S1	SLAB	E	20			V	2	27 11.000							27 11	27 11	2382
			INCR=6IN							2 0.000							2 0	2 0	
684	6	S2	SLAB	E	20					28 5.000							28 5	28 5	29194
365	5	S3	SLAB	E	20					5 7.000							5 7	5 7	2126
175	8	S4	SLAB	E	20					57 0.000							57 0	57 0	26633
44	8	S5	SLAB	E	20					60 0.000							60 0	60 0	7049
44	8	S6	SLAB	E	20					57 0.000							57 0	57 0	6696
112	6	S7	SLAB	E	20					56 0.000							56 0	56 0	9421
			BARRIERS																
20	5	K1	BARRIER	E	27					3 8.000	9.250	5.375	3 2.750		5.250	1.000	8 1	7 11	165
94	5	K2	BARRIER	E	27					3 8.000	9.250	14.500	2 5.750		14.250	2.750	8 2	7 11	776
4	5	K3	BARRIER	E	27					22.500	9.250	14.500	7.750	12.000	14.250	2.750	5 6	5 2	22
118	5	K4	BARRIER	E	19					2 5.000	10.000						3 3	3 1	379
20	5	K5	BARRIER	E	14					8.250	9.250	19.250			4.250	18.750	3 1	2 11	61
98	5	K6	BARRIER	E	21					2 4.875	10.000				2 4.250	6.000	3 3	3 1	315
28	5	K7	BARRIER	E	20					21 4.000							21 4	21 4	623
28	5	K8	BARRIER	E	20					22 8.000							22 8	22 8	662
737	5	R1	BARRIER	E	14					2 5.000	6.500	2 5.500			2 5.000	5.500	5 5	5 2	3972
737	5	R2	BARRIER	E	19					20.500	9.500						2 6	2 4	1794
737	5	R3	BARRIER	E	27						9.500	15.250	5.000	12.000	15.000	3.000	3 6	3 3	2498
64	5	R4	BARRIER	E	20					11 8.000							11 8	11 8	779
32	5	R5	BARRIER	E	20					54 7.000							54 7	54 7	1822
32	5	R6	BARRIER	E	20					51 11.000							51 11	51 11	1733
32	5	R7	BARRIER	E	20					53 11.000							53 11	53 11	1800
1	5	R8	BARRIER	E	20					6 0.000							6 0	6 0	6
			SLIP FORM																
			OPTION																
40	5	C1	SLIP FORM	E	20					12 0.000							12 0	12 0	501
16	5	C2	SLIP FORM	E	20					8 0.000							8 0	8 0	134

BILL OF REINFORCING STEEL

NO. REQ'D.	MARK NO. SIZE	MARK	LOCATION	EPOXY (E)	SHAPE NO.	STIRRUP (S)	SUBSTR. (X)	VARIES (V)	NO. EACH	B FT. IN.	C FT. IN.	D FT. IN.	E FT. IN.	F FT. IN.	H FT. IN.	K FT. IN.	NOMINAL LENGTH FT. IN.	ACTUAL LENGTH FT. IN.	WEIGHT LBS.
			TOTALS																
	4																		1209
	4			E															628
	5			E															23813
	6																		6956
	6			E															49363
	8																		200
	8			E															49626
	9																		10648
	10																		6564
			TOTAL																25577
			TOTAL	E															123430
			SLAB ON GIRDER																
	4			E															628
	5			E															5771
	6			E															49363
	8			E															49626
			TOTAL	E															105388
			REINFORCING																
			STEEL (BRIDGES)																
	4																		1209
	6																		6956
	8																		200
	9																		10648
	11																		6564
			TOTAL																25577
			BARRIER																
	5			E															17407
			TOTAL	E															17407
			SLIP FORM																
	5			E															635
			TOTAL	E															635

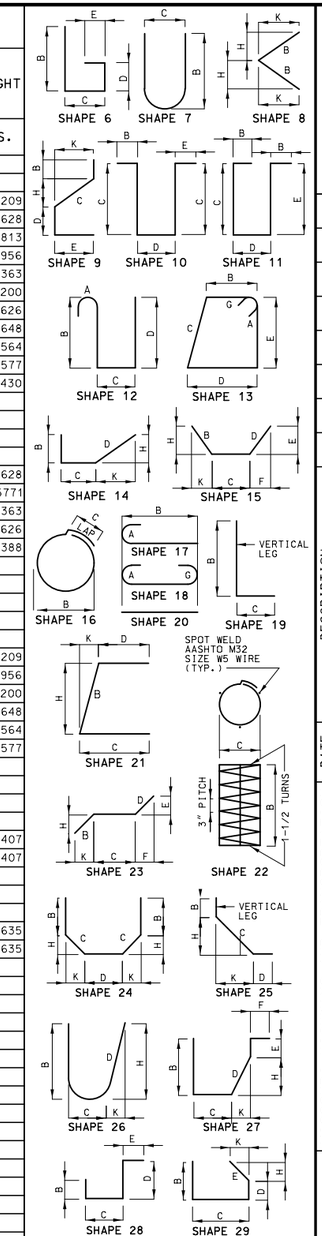

BENDING DIAGRAMS

FOR INFORMATION ONLY NOT FOR CONSTRUCTION

DATE PREPARED 4/28/2023

ROUTE 90 | STATE MO

DISTRICT BR | SHEET NO. 31

COUNTY McDONALD

JOB NO. J7S0532

CONTRACT ID.

PROJECT NO.

BRIDGE NO. A9230

DESCRIPTION

DATE

IF A SEAL IS PRESENT ON THIS SHEET IT HAS BEEN ELECTRONICALLY SEALED AND DATED

MISSOURI HIGHWAYS AND TRANSPORTATION COMMISSION

105 WEST CAPITOL
JEFFERSON CITY, MO 65102
1-888-ASK-MODOT (1-888-275-6636)

EFK•Moen
Civil Engineering Design
13523 Barrett Parkway Dr. Suite 250
St. Louis, MO 63021
314-394-3100
Missouri Certificate of Authority: 001578

REV.

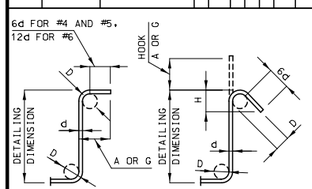

STIRRUP HOOK DIMENSIONS				
GRADES 40 - 50 - 60 KSI				
BAR SIZE	D (IN.)	90° HOOK: HOOK A OR G	135° HOOK: HOOK A OR G	135° HOOK: APPROX. H
#4	2"	4 1/2"	4 1/2"	3"
#5	2 1/2"	6"	5 1/2"	3 3/4"
#6	4 1/2"	12"	8"	4 1/2"

NOTE: UNLESS OTHERWISE NOTED, DIAMETER "D" IS THE SAME FOR ALL BENDS AND HOOKS ON A BAR.

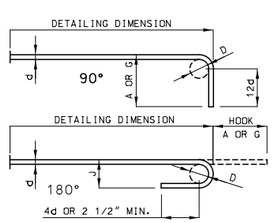

END HOOK DIMENSIONS				
BAR SIZE	D (IN.)	ALL GRADES: 180° HOOKS: A OR G	ALL GRADES: 180° HOOKS: J	ALL GRADES: 90° HOOKS: A OR G
#3	2 1/4"	5"	3"	6"
#4	3"	6"	4"	8"
#5	3 3/4"	7"	5"	10"
#6	4 1/2"	8"	6"	12"
#7	5 1/4"	10"	7"	14"
#8	6"	11"	8"	16"
#9	9 1/2"	15"	11 3/4"	19"
#10	10 3/4"	17"	13 1/4"	22"
#11	12"	19"	14 3/4"	2'-0"
#14	18 1/4"	2'-3"	21 3/4"	2'-7"

NOTE:

ALL STANDARD HOOKS AND BENDS OTHER THAN 180 DEGREE ARE TO BE BENT WITH SAME PROCEDURE AS FOR 90 DEGREE STANDARD HOOKS.

HOOKS AND BENDS SHALL BE IN ACCORDANCE WITH THE PROCEDURES AS SHOWN ON THIS SHEET.

E = EPOXY COATED REINFORCEMENT.
S = STIRRUP.
X = BAR IS INCLUDED IN SUBSTRUCTURE QUANTITIES.
V = BAR DIMENSIONS VARY IN EQUAL INCREMENTS BETWEEN DIMENSIONS SHOWN ON THIS LINE AND THE FOLLOWING LINE.
NO. EA. = NUMBER OF BARS OF EACH LENGTH.

NOMINAL LENGTHS ARE BASED ON OUT TO OUT DIMENSIONS SHOWN IN BENDING DIAGRAMS AND ARE LISTED FOR FABRICATORS USE. (NEAREST INCH)

ACTUAL LENGTHS ARE MEASURED ALONG CENTERLINE BAR TO THE NEAREST INCH.

PAYWEIGHTS ARE BASED ON ACTUAL LENGTHS.

FOUR ANGLE OR CHANNEL SPACERS ARE REQUIRED FOR EACH COLUMN SPIRAL. SPACERS ARE TO BE PLACED ON INSIDE OF SPIRALS. LENGTH AND WEIGHT OF COLUMN SPIRALS DO NOT INCLUDE SPLICES OR SPACERS.

REINFORCING STEEL (GRADE 60) FY = 60,000 PSI.

Detailed Feb. 2023
Checked Feb. 2023

Note: This drawing is not to scale. Follow dimensions.

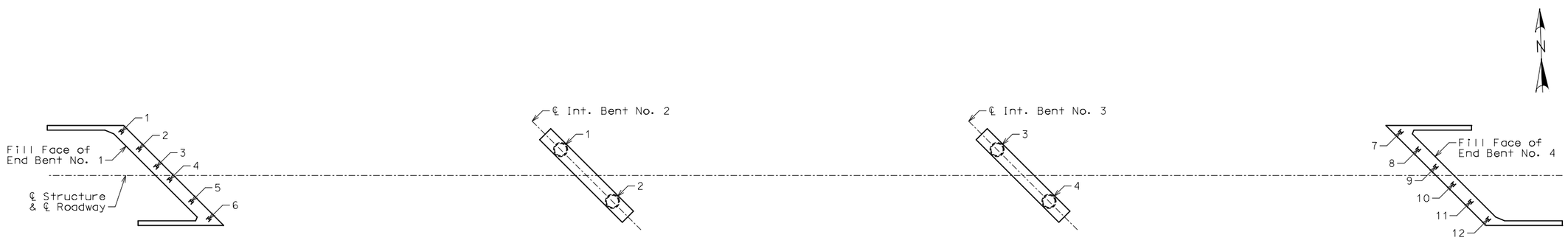

PART PLAN SHOWING NUMBERING FOR RECORDING AS-BUILT PILE AND DRILLED SHAFT DATA

As-Built Pile Data

Pile No.	Length in Place (ft)	Computed Nominal Axial Compressive Resistance (kips)	Remarks
			End Bent No. 1
1			
2			
3			
4			
5			
6			
			End Bent No. 4
7			
8			
9			
10			
11			
12			

As-Built Drilled Shaft Data

Shaft No.	Top of Sound Rock (Elev.)	Tip of Casing (Elev.)	Bottom of Rock Socket (Elev.)	Remarks
				Int. Bent No. 2
1				
2				
				Int. Bent No. 3
3				
4				

Note:
Indicate in remarks column:
A. Pile type and grade
B. Batter
C. Driven to practical refusal

This sheet to be completed by MoDOT construction personnel.

AS-BUILT PILE AND DRILLED SHAFT DATA

Detailed Feb. 2023
Checked Feb. 2023

Note: This drawing is not to scale. Follow dimensions.

FOR INFORMATION ONLY NOT FOR CONSTRUCTION

DATE PREPARED 4/17/2023

ROUTE	STATE
90	MO
DISTRICT	SHEET NO.
BR	32

COUNTY McDONALD

JOB NO. J7S0532

CONTRACT ID.

PROJECT NO.

BRIDGE NO. A9230

DESCRIPTION	DATE

IF A SEAL IS PRESENT ON THIS SHEET IT HAS BEEN ELECTRONICALLY SEALED AND DATED

MISSOURI HIGHWAYS AND TRANSPORTATION COMMISSION
105 WEST CAPITOL
JEFFERSON CITY, MO 65102
1-888-ASK-MODOT (1-888-275-6636)

EFK•Moen
Civil Engineering Design
13523 Barrett Parkway Dr, Suite 250
St. Louis, MO 63021
314-394-3100
Missouri Certificate of Authority: 001578

REV.

MoDOT-Geotechnical Section
1617 Missouri Blvd
Jefferson City, MO 65109

SUBSURFACE DIAGRAM

PROJECT NAME Bridge Replacement
PROJECT LOCATION Over Little Sugar Creek
CLIENT
PROJECT NUMBER J7S0532

Concrete
USCS Poorly-graded Gravel
USCS Low Plasticity Gravelly Clay
No Core
Highly Weathered Dolomite
USCS Low Plasticity Clay
Water
Dolomite
Asphalt

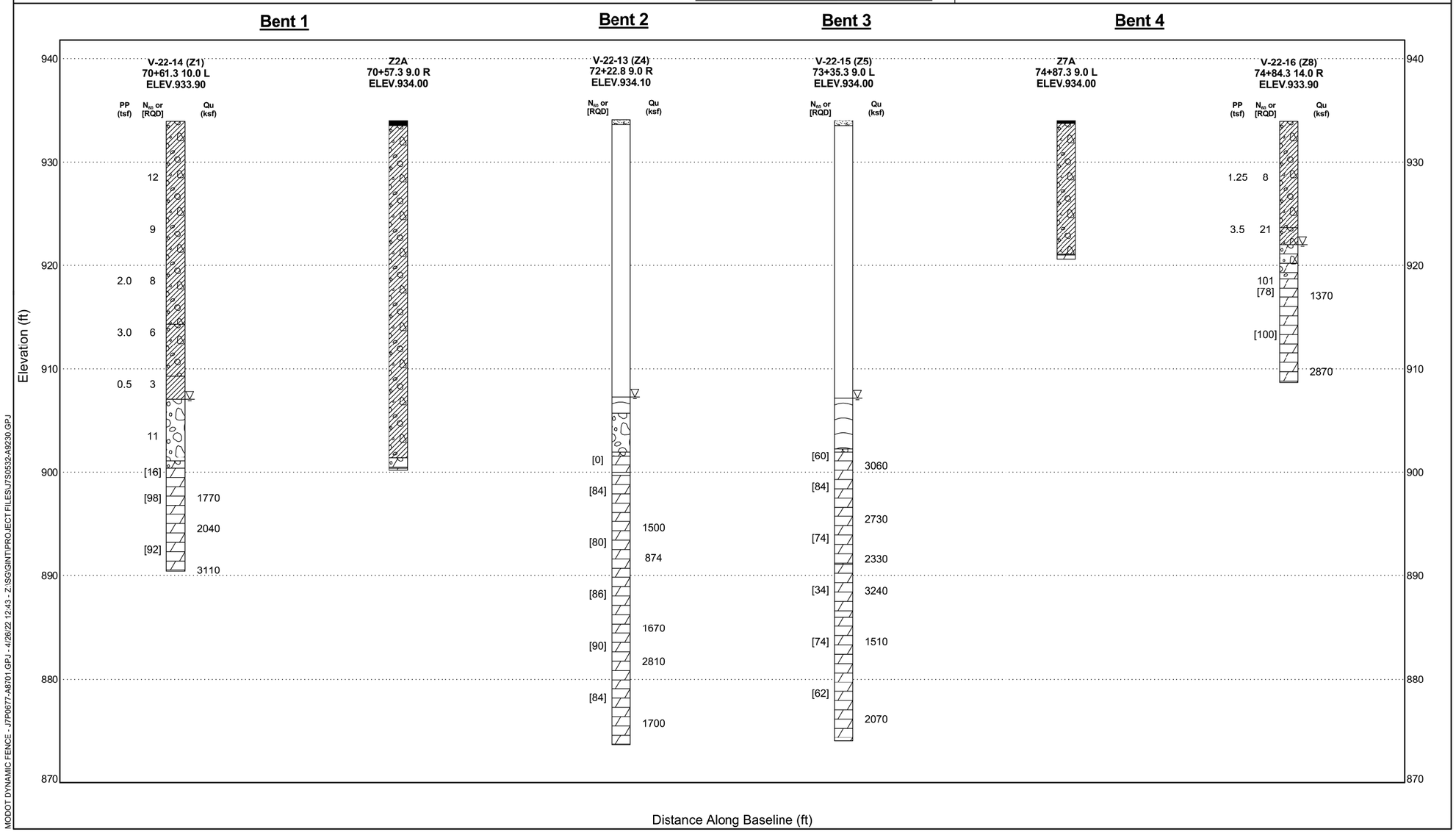

MODOT DYNAMIC FENCE - J7P0677-A8701.GPJ - 4/26/22 12:43 - Z:\SG\GINT\PROJECT FILES\J7S0532-A9230.GPJ

BORING DATA

Note: For locations of borings, see Sheet No. 1.

Note: This drawing is not to scale. Follow dimensions.

Detailed Feb. 2023
Checked Feb. 2023

Sheet No. 33 of 42

FOR INFORMATION ONLY NOT FOR CONSTRUCTION

DATE PREPARED	4/17/2023
ROUTE	90
STATE	MO
DISTRICT	BR
SHEET NO.	33
COUNTY	McDONALD
JOB NO.	J7S0532
CONTRACT ID.	
PROJECT NO.	
BRIDGE NO.	A9230

DESCRIPTION
DATE

MISSOURI HIGHWAYS AND TRANSPORTATION COMMISSION
105 WEST CAPITOL
JEFFERSON CITY, MO 65102
1-888-ASK-MODOT (1-888-275-6636)

EFK•Moen
Civil Engineering Design
13523 Barrett Parkway Dr, Suite 250
St. Louis, MO 63021
314-394-3100
Missouri Certificate of Authority: 001578

IF A SEAL IS PRESENT ON THIS SHEET IT HAS BEEN ELECTRONICALLY SEALED AND DATED

REV.

Missouri Department of Transportation
Construction and Materials

BORING NO. Z2A
Page 1 of 1

Job No.: J7S0532 **County:** McDonald **Route:** MO 90
Design: A9230 **Skew:** 45 RA **Location:** Over Little Sugar Creek
Bent: 1 **Logged By:** Matthew Kistler **Operator:** Kenneth Tuttle
Station: 70+57.3 **Northing:** 140380.2 **Date of Work:** 04/05/22-04/05/22
Offset: 9.0 R **Easting:** 2852594.9 **Depth to Water:**
Elevation: 934.0 **Requested Northing:** 140377.3 **Depth Hole Open:**
Requested Station: 70+90.3 **Requested Easting:** 2852630.4 **Time Change:**
Requested Offset: 9 R **Equipment:** Mobile B-31
Requested Elevation: 934.0 **Location Note:** Offset to avoid riprap.
Drill No.: G-9290 **Hammer Efficiency:** **Drilling Method:** Continuous Flight Auger

Depth (ft)	Graphic	Description	Elevation (ft)	Sample Type	REC % (RQD %)	Blow Counts (N_{60})	Field Tests	Specimen Info
0		0.0-0.5' ASPHALT						
		0.5-32.6' Brownish red, GRAVELLY LEAN CLAY, moist to wet						
5			930					
10			925					
15			920					
20			915					
25			910					
30			905					
		32.6-33.6' Dolomite, highly weathered						
		33.6-33.8' Dolomite, moderately weathered to slightly weathered						
		Bottom of borehole at 33.8 feet.						

N_{60} = (Em/60)Nm N_{60} - Corrected N value for standard 60% SPT efficiency; Em - Measured hammer efficiency in percent; Nm - Observed N-value
(1) = Assumed, (2) = Actual

Coordinate System: Modified U.S. State Plane 1983 **Coordinate Zone:** Missouri West **Coordinate Proj. Factor:** 1.0000935
Coordinate Datum: NAD 83 (CONUS) **Coordinate Units:** U.S. Survey Feet

* Persons using this information are cautioned that the materials shown are determined by the equipment noted and accuracy of the "log of materials" is limited thereby and by judgement of the operator. THIS INFORMATION IS FOR DESIGN PURPOSES ONLY.

LETTER BOREHOLE - FIELD LOG - MODOT 20150728.GDT - 4/26/22 14:41 - Z:\SG\GINT\PROJECT FILES\J7S0532-A9230.GPJ

Missouri Department of Transportation
Construction and Materials

BORING NO. V-22-14 (Z1)
Page 1 of 2

Job No.: J7S0532 **County:** McDonald **Route:** MO 90
Design: A9230 **Skew:** 45 RA **Location:** Over Little Sugar Creek
Bent: 1 **Logged By:** Matthew Kistler **Operator:** Gary Degraffenreid
Station: 70+61.3 **Northing:** 140397.8 **Date of Work:** 04/05/22-04/06/22
Offset: 10.0 L **Easting:** 2852587.6 **Depth to Water:** 26.8
Elevation: 933.9 **Requested Northing:** 140390.6 **Depth Hole Open:** 26.8
Requested Station: 70+90.3 **Requested Easting:** 2852618.2 **Time Change:** At Time of Drilling
Requested Offset: 9 L **Equipment:** Acker Renegade ,Grab Sample, Split-Spoon Sampler, NQ
Requested Elevation: 933.9 **Location Note:** Offset due to overhead utilities.
Drill No.: G-9667 **Hammer Efficiency:** 92% **Drilling Method:** Hollow Stem Auger

Depth (ft)	Graphic	Description	Elevation (ft)	Sample Type	REC % (RQD %)	Blow Counts (N_{60})	Shear Data	Field Tests	Index Tests
0		0.0-19.6' Brownish red, GRAVELLY LEAN CLAY, stiff to medium stiff, moist							
5			930						
					13	3-3-5 (12)			
10			925						
					20	2-3-3 (9)			
15			920						
					47	1-2-3 (8)		PP = 2.00 tsf	MC = 13.1% γ_{sat} = 133 pcf(1) LL = 35 PL = 18
20			915						
		19.6-24.6' Brown, GRAVELLY LEAN CLAY, medium stiff, moist			53	0-2-2 (6)		PP = 3.00 tsf	MC = 21.5% γ_{sat} = 129 pcf(1)
25			910						
		24.6-26.8' Gray, LEAN CLAY trace wood fragments, soft, moist to wet			100	0-0-2 (3)		PP = 0.50 tsf	MC = 23.6% γ_{sat} = 122 pcf(1) LL = 33 PL = 22
		26.8-32.8' Light tan and dark tan, GRAVEL, loose to medium dense, wet, fine to medium grained							
30			905						
					33	5-3-4 (11)			
		32.8-33.5' Dolomite, highly weathered	900						
35		33.5-43.5' Dolomite, dark gray and light gray, thin bedded to medium bedded, very strong rock to extremely strong rock, moderately weathered to slightly weathered, fine grained grained, Scattered pitting			100 (16)		Qu Test Results UCS = 1770 ksf MC = 0% γ_{moist} = 171.6		
			895		100 (98)				
40									

N_{60} = (Em/60)Nm N_{60} - Corrected N value for standard 60% SPT efficiency; Em - Measured hammer efficiency in percent; Nm - Observed N-value
(1) = Assumed, (2) = Actual

Coordinate System: Modified U.S. State Plane 1983 **Coordinate Zone:** Missouri West **Coordinate Proj. Factor:** 1.0000935
Coordinate Datum: NAD 83 (CONUS) **Coordinate Units:** U.S. Survey Feet

* Persons using this information are cautioned that the materials shown are determined by the equipment noted and accuracy of the "log of materials" is limited thereby and by judgement of the operator. THIS INFORMATION IS FOR DESIGN PURPOSES ONLY.

LETTER BOREHOLE - MODOT 20150728.GDT - 4/26/22 11:38 - Z:\SG\GINT\PROJECT FILES\J7S0532-A9230.GPJ

FOR INFORMATION ONLY NOT FOR CONSTRUCTION

DATE PREPARED 4/17/2023
ROUTE 90 STATE MO
DISTRICT BR SHEET NO. 34
COUNTY McDONALD
JOB NO. J7S0532
CONTRACT ID.
PROJECT NO.
BRIDGE NO. A9230

DESCRIPTION | DATE

MISSOURI HIGHWAYS AND TRANSPORTATION COMMISSION
105 WEST CAPITOL
JEFFERSON CITY, MO 65102
1-888-ASK-MODOT (1-888-275-6636)

EFK•Moen
Civil Engineering Design
13523 Barrett Parkway Dr, Suite 250
St. Louis, MO 63021
314-394-3100
Missouri Certificate of Authority: 001578

IF A SEAL IS PRESENT ON THIS SHEET IT HAS BEEN ELECTRONICALLY SEALED AND DATED

REV.

BORING DATA

Note: For locations of borings, see Sheet No. 1.

Detailed Feb. 2023
Checked Feb. 2023

Note: This drawing is not to scale. Follow dimensions.

Missouri Department of Transportation
Construction and Materials

BORING NO. V-22-14 (Z1)
Page 2 of 2

Job No.: J7S0532 **County:** McDonald **Route:** MO 90
Design: A9230 **Skew:** 45 RA **Location:** Over Little Sugar Creek
Bent: 1 **Logged By:** Matthew Kistler **Operator:** Gary Degraffenreid
Station: 70+61.3 **Northing:** 140397.8 **Date of Work:** 04/05/22-04/06/22
Offset: 10.0 L **Easting:** 2852587.6 **Depth to Water:** 26.8
Elevation: 933.9 **Requested Northing:** 140390.6 **Depth Hole Open:** 26.8
Requested Station: 70+90.3 **Requested Easting:** 2852618.2 **Time Change:** At Time of Drilling
Requested Offset: 9 L **Equipment:** Acker Renegade ,Grab Sample, Split-Spoon Sampler, NQ
Requested Elevation: 933.9 **Location Note:** Offset due to overhead utilities.
Drill No.: G-9667 **Hammer Efficiency:** 92% **Drilling Method:** Hollow Stem Auger

Depth (ft)	Graphic	Description	Elevation (ft)	Sample Type	REC % (RQD %)	Blow Counts (N_{60})	Shear Data	Field Tests	Index Tests
40									
		Bottom of borehole at 43.5 feet.			100 (92)		pcf Qu Test Results UCS = 2040 ksf MC = 0% γ_{moist} = 168.8 pcf; Qu Test Results UCS = 3110 ksf MC = 0% γ_{moist} = 162.1 pcf		

N_{60} = (Em/60)Nm N_{60} - Corrected N value for standard 60% SPT efficiency; Em - Measured hammer efficiency in percent; Nm - Observed N-value
(1) = Assumed, (2) = Actual

Coordinate System: Modified U.S. State Plane 1983 **Coordinate Zone:** Missouri West **Coordinate Proj. Factor:** 1.0000935
Coordinate Datum: NAD 83 (CONUS) **Coordinate Units:** U.S. Survey Feet

* Persons using this information are cautioned that the materials shown are determined by the equipment noted and accuracy of the "log of materials" is limited thereby and by judgement of the operator. THIS INFORMATION IS FOR DESIGN PURPOSES ONLY.

LETTER BOREHOLE - MODOT 20150728.GDT - 4/26/22 11:38 - Z:\SG\GINT\PROJECT FILES\J7S0532-A9230.GPJ

Missouri Department of Transportation
Construction and Materials

BORING NO. V-22-13 (Z4)
Page 1 of 2

Job No.: J7S0532 **County:** McDonald **Route:** MO 90
Design: A9230 **Skew:** 45 RA **Location:** Over Little Sugar Creek
Bent: 2 **Logged By:** Matthew Kistler **Operator:** Gary Degraffenreid
Station: 72+22.8 **Northing:** 140376.2 **Date of Work:** 04/05/22-04/05/22
Offset: 9.0 R **Easting:** 2852760.7 **Depth to Water:** 26.8
Elevation: 934.1 **Requested Northing:** 140373.1 **Depth Hole Open:** 26.8
Requested Station: 72+10.3 **Requested Easting:** 2852750.3 **Time Change:** 0 hours
Requested Offset: 9 R **Equipment:** Acker Renegade ,Grab Sample, NQ
Requested Elevation: 934.1 **Location Note:** Offset due to overhead utilities.
Drill No.: G-9667 **Hammer Efficiency:** 92% **Drilling Method:** Casing Advancer

Depth (ft)	Graphic	Description	Elevation (ft)	Sample Type	REC % (RQD %)	Blow Counts (N_{60})	Shear Data	Field Tests	Index Tests
0		0.0-0.5' CONCRETE, Bridge Deck							
		0.5-26.8' Air							
5			930						
10			925						
15			920						
20			915						
25			910						
		26.8-28.4' WATER							
30		28.4-32.1' Light tan and dark tan, GRAVEL with fine sand, loose, wet, fine and coarse grained	905						Sieve Analysis Sieve # % Passing 100.0 94.1 86.4 53.2 28.8 17.4 14.7 9.0 5.9 3.2 2.7
		32.1-32.5' Dolomite, highly weathered							
35		32.5-34.1' Dolomite, dark gray and light gray, very thin bedded, highly weathered to moderately weathered, fine grained grained	900		77 (0)				
		34.1-34.4' Void							
40			895		100 (84)		Qu Test Results UCS = 1500 ksf MC = 0% γ_{moist} = 164.8 pcf		

N_{60} = (Em/60)Nm N_{60} - Corrected N value for standard 60% SPT efficiency; Em - Measured hammer efficiency in percent; Nm - Observed N-value
(1) = Assumed, (2) = Actual

Coordinate System: Modified U.S. State Plane 1983 **Coordinate Zone:** Missouri West **Coordinate Proj. Factor:** 1.0000935
Coordinate Datum: NAD 83 (CONUS) **Coordinate Units:** U.S. Survey Feet

* Persons using this information are cautioned that the materials shown are determined by the equipment noted and accuracy of the "log of materials" is limited thereby and by judgement of the operator. THIS INFORMATION IS FOR DESIGN PURPOSES ONLY.

LETTER BOREHOLE - MODOT 20150728.GDT - 4/26/22 11:38 - Z:\SG\GINT\PROJECT FILES\J7S0532-A9230.GPJ

FOR INFORMATION ONLY NOT FOR CONSTRUCTION

DATE PREPARED 4/17/2023
ROUTE 90 STATE MO
DISTRICT BR SHEET NO. 35
COUNTY McDONALD
JOB NO. J7S0532
CONTRACT ID.
PROJECT NO.
BRIDGE NO. A9230

DESCRIPTION | DATE

MISSOURI HIGHWAYS AND TRANSPORTATION COMMISSION
105 WEST CAPITOL
JEFFERSON CITY, MO 65102
1-888-ASK-MODOT (1-888-275-6636)

EFK•Moen
Civil Engineering Design
13523 Barrett Parkway Dr. Suite 250
St. Louis, MO 63021
314-394-3100
Missouri Certificate of Authority: 001578

IF A SEAL IS PRESENT ON THIS SHEET IT HAS BEEN ELECTRONICALLY SEALED AND DATED

REV.

BORING DATA

Note: For locations of borings, see Sheet No. 1.

Detailed Feb. 2023
Checked Feb. 2023

Note: This drawing is not to scale. Follow dimensions.

Missouri Department of Transportation
Construction and Materials

BORING NO. V-22-13 (Z4)
Page 2 of 2

Job No.: J7S0532 **County:** McDonald **Route:** MO 90
Design: A9230 **Skew:** 45 RA **Location:** Over Little Sugar Creek
Bent: 2 **Logged By:** Matthew Kistler **Operator:** Gary Degraffenreid
Station: 72+22.8 **Northing:** 140376.2 **Date of Work:** 04/05/22-04/05/22
Offset: 9.0 R **Easting:** 2852760.7 **Depth to Water:** 26.8
Elevation: 934.1 **Requested Northing:** 140373.1 **Depth Hole Open:** 26.8
Requested Station: 72+10.3 **Requested Easting:** 2852750.3 **Time Change:** 0 hours
Requested Offset: 9 R **Equipment:** Acker Renegade ,Grab Sample, NQ
Requested Elevation: 934.1 **Location Note:** Offset due to overhead utilities.
Drill No.: G-9667 **Hammer Efficiency:** 92% **Drilling Method:** Casing Advancer

Depth (ft)	Graphic	Description	Elevation (ft)	Sample Type	REC % (RQD %)	Blow Counts (N_{60})	Shear Data	Field Tests	Index Tests
40		34.4-60.5' Dolomite, dark gray and light gray, thin bedded to medium bedded, strong rock to extremely strong rock, moderately weathered to slightly weathered, fine grained grained, Pitted to Vuggy *(continued)*							
45			890		90 (80)		Qu Test Results UCS = 874 ksf MC = 0% γ_{moist} = 161.8 pcf		
50			885		100 (86)		Qu Test Results UCS = 1670 ksf MC = 0% γ_{moist} = 165.3 pcf		
55			880		96 (90)		Qu Test Results UCS = 2810 ksf MC = 0% γ_{moist} = 172.2 pcf		
60		Bottom of borehole at 60.5 feet.	875		100 (84)		Qu Test Results UCS = 1700 ksf MC = 0% γ_{moist} = 163.5 pcf		

N_{60} = (Em/60)Nm N_{60} - Corrected N value for standard 60% SPT efficiency; Em - Measured hammer efficiency in percent; Nm - Observed N-value
(1) = Assumed, (2) = Actual

Coordinate System: Modified U.S. State Plane 1983 **Coordinate Zone:** Missouri West **Coordinate Proj. Factor:** 1.0000935
Coordinate Datum: NAD 83 (CONUS) **Coordinate Units:** U.S. Survey Feet

* Persons using this information are cautioned that the materials shown are determined by the equipment noted and accuracy of the "log of materials" is limited thereby and by judgement of the operator. THIS INFORMATION IS FOR DESIGN PURPOSES ONLY.

LETTER BOREHOLE - MODOT 20150728.GDT - 4/26/22 11:38 - Z:\SG\GINT\PROJECT FILES\J7S0532-A9230.GPJ

Missouri Department of Transportation
Construction and Materials

BORING NO. V-22-15 (Z5)
Page 1 of 2

Job No.: J7S0532 **County:** McDonald **Route:** MO 90
Design: A9230 **Skew:** 45 RA **Location:** Over Little Sugar Creek
Bent: 3 **Logged By:** Matthew Kistler **Operator:** Gary Degraffenreid
Station: 73+35.3 **Northing:** 140381.9 **Date of Work:** 04/06/22-04/06/22
Offset: 9.0 L **Easting:** 2852863 **Depth to Water:** 26.8
Elevation: 934.0 **Requested Northing:** **Depth Hole Open:** 0.5
Requested Station: **Requested Easting:** **Time Change:** 0 hours
Requested Offset: **Equipment:** Acker Renegade ,NQ
Requested Elevation: **Location Note:** On stake.
Drill No.: G-9667 **Hammer Efficiency:** 92% **Drilling Method:** Casing Advancer

Depth (ft)	Graphic	Description	Elevation (ft)	Sample Type	REC % (RQD %)	Blow Counts (N_{60})	Shear Data	Field Tests	Index Tests
0		0.0-0.5' CONCRETE, Bridge Deck 0.5-26.8' Air							
5			930						
10			925						
15			920						
20			915						
25			910						
30		26.8-31.7' WATER	905						
35		31.7-32.0' Dolomite, highly weathered 32.0-42.9' Dolomite, dark gray and light gray, thin bedded to medium bedded, extremely strong rock, moderately weathered to slightly weathered, fine grained grained	900		97 (60)		Qu Test Results UCS = 3060 ksf MC = 0% γ_{moist} = 164 pcf		
40			895		100 (84)		Qu Test Results UCS = 2730 ksf MC = 0% γ_{moist} = 173.1 pcf		

N_{60} = (Em/60)Nm N_{60} - Corrected N value for standard 60% SPT efficiency; Em - Measured hammer efficiency in percent; Nm - Observed N-value
(1) = Assumed, (2) = Actual

Coordinate System: Modified U.S. State Plane 1983 **Coordinate Zone:** Missouri West **Coordinate Proj. Factor:** 1.0000935
Coordinate Datum: NAD 83 (CONUS) **Coordinate Units:** U.S. Survey Feet

* Persons using this information are cautioned that the materials shown are determined by the equipment noted and accuracy of the "log of materials" is limited thereby and by judgement of the operator. THIS INFORMATION IS FOR DESIGN PURPOSES ONLY.

LETTER BOREHOLE - MODOT 20150728.GDT - 4/26/22 11:38 - Z:\SG\GINT\PROJECT FILES\J7S0532-A9230.GPJ

FOR INFORMATION ONLY NOT FOR CONSTRUCTION

DATE PREPARED 4/17/2023
ROUTE 90 STATE MO
DISTRICT BR SHEET NO. 36
COUNTY McDONALD
JOB NO. J7S0532
CONTRACT ID.
PROJECT NO.
BRIDGE NO. A9230

DESCRIPTION | DATE

MISSOURI HIGHWAYS AND TRANSPORTATION COMMISSION
105 WEST CAPITOL
JEFFERSON CITY, MO 65102
1-888-ASK-MODOT (1-888-275-6636)

EFK•Moen
Civil Engineering Design
13523 Barrett Parkway Dr, Suite 250
St. Louis, MO 63021
314-394-3100
Missouri Certificate of Authority: 001578

IF A SEAL IS PRESENT ON THIS SHEET IT HAS BEEN ELECTRONICALLY SEALED AND DATED

REV.

BORING DATA

Note: For locations of borings, see Sheet No. 1.

Detailed Feb. 2023
Checked Feb. 2023

Note: This drawing is not to scale. Follow dimensions.

Missouri Department of Transportation
Construction and Materials

BORING NO. V-22-15 (Z5)
Page 2 of 2

Job No.: J7S0532 **County:** McDonald **Route:** MO 90
Design: A9230 **Skew:** 45 RA **Location:** Over Little Sugar Creek
Bent: 3 **Logged By:** Matthew Kistler **Operator:** Gary Degraffenreid
Station: 73+35.3 **Northing:** 140381.9 **Date of Work:** 04/06/22-04/06/22
Offset: 9.0 L **Easting:** 2852863 **Depth to Water:** 26.8
Elevation: 934.0 **Requested Northing:** **Depth Hole Open:** 0.5
Requested Station: **Requested Easting:** **Time Change:** 0 hours
Requested Offset: **Equipment:** Acker Renegade ,NQ
Requested Elevation: **Location Note:** On stake.
Drill No.: G-9667 **Hammer Efficiency:** 92% **Drilling Method:** Casing Advancer

Depth (ft)	Graphic	Description	Elevation (ft)	Sample Type	REC % (RQD %)	Blow Counts (N_{60})	Shear Data	Field Tests	Index Tests
40									
45		42.9-48.0' Dolomite, dark gray and light gray, very thin bedded, extremely strong rock, slightly weathered, fine grained grained	890		100 (74)		Qu Test Results UCS = 2330 ksf MC = 0% γ_{moist} = 170.2 pcf		
50		48.0-60.0' Dolomite, dark gray and light gray, thin bedded to medium bedded, very strong rock to extremely strong rock, slightly weathered, fine grained grained	885		96 (34)		Qu Test Results UCS = 3240 ksf MC = 0% γ_{moist} = 163.5 pcf		
55			880		96 (74)		Qu Test Results UCS = 1510 ksf MC = 0% γ_{moist} = 169 pcf		
60			875		90 (62)		Qu Test Results UCS = 2070 ksf MC = 0% γ_{moist} = 163.3 pcf		
		Bottom of borehole at 60.0 feet.							

N_{60} = (Em/60)Nm N_{60} - Corrected N value for standard 60% SPT efficiency; Em - Measured hammer efficiency in percent; Nm - Observed N-value
(1) = Assumed, (2) = Actual

Coordinate System: Modified U.S. State Plane 1983 **Coordinate Zone:** Missouri West **Coordinate Proj. Factor:** 1.0000935
Coordinate Datum: NAD 83 (CONUS) **Coordinate Units:** U.S. Survey Feet

* Persons using this information are cautioned that the materials shown are determined by the equipment noted and accuracy of the "log of materials" is limited thereby and by judgement of the operator. THIS INFORMATION IS FOR DESIGN PURPOSES ONLY.

LETTER BOREHOLE - MODOT 20150728.GDT - 4/26/22 11:38 - Z:\SG\GINT\PROJECT FILES\J7S0532-A9230.GPJ

Missouri Department of Transportation
Construction and Materials

BORING NO. V-22-16 (Z8)
Page 1 of 1

Job No.: J7S0532 **County:** McDonald **Route:** MO 90
Design: A9230 **Skew:** 45 RA **Location:** Over Little Sugar Creek
Bent: 4 **Logged By:** Matthew Kistler **Operator:** Gary Degraffenreid
Station: 74+84.3 **Northing:** 140361.5 **Date of Work:** 04/07/22-04/07/22
Offset: 14.0 R **Easting:** 2853019.8 **Depth to Water:** 11.9
Elevation: 933.9 **Requested Northing:** 140364.5 **Depth Hole Open:** 11.9
Requested Station: 74+55.3 **Requested Easting:** 2852995.1 **Time Change:**
Requested Offset: 9 R **Equipment:** Acker Renegade ,Split-Spoon Sampler, NQ
Requested Elevation: 934.0 **Location Note:** Offset to avoid riprap.
Drill No.: G-9667 **Hammer Efficiency:** 92% **Drilling Method:** Hollow Stem Auger

Depth (ft)	Graphic	Description	Elevation (ft)	Sample Type	REC % (RQD %)	Blow Counts (N_{60})	Shear Data	Field Tests	Index Tests
0		0.0-10.2' Reddish brown, GRAVELLY LEAN CLAY, medium stiff, moist							
5			930		313	1-2-3 (8)		PP = 1.25 tsf	MC = 15.6% γ_{dry} = 135 pcf(1) LL = 25 PL = 15
10			925		80	3-5-9 (21)		PP = 3.50 tsf	MC = 13.8% γ_{dry} = 132 pcf(1)
		10.2-11.9' Brown, GRAVELLY LEAN CLAY, very stiff, moist							
		11.9-15.2' Dolomite, highly weathered	920						
15					5	10/0.2'			
20		15.2-25.2' Dolomite, dark gray and light gray, thin bedded to medium bedded, very strong rock to extremely strong rock, moderately weathered to slightly weathered, fine grained grained	915		94 (78)		Qu Test Results UCS = 1370 ksf MC = 0% γ_{moist} = 166.5 pcf		
25			910		100 (100)		Qu Test Results UCS = 2870 ksf MC = 0% γ_{moist} = 167.3 pcf		
		Bottom of borehole at 25.2 feet.							

N_{60} = (Em/60)Nm N_{60} - Corrected N value for standard 60% SPT efficiency; Em - Measured hammer efficiency in percent; Nm - Observed N-value
(1) = Assumed, (2) = Actual

Coordinate System: Modified U.S. State Plane 1983 **Coordinate Zone:** Missouri West **Coordinate Proj. Factor:** 1.0000935
Coordinate Datum: NAD 83 (CONUS) **Coordinate Units:** U.S. Survey Feet

* Persons using this information are cautioned that the materials shown are determined by the equipment noted and accuracy of the "log of materials" is limited thereby and by judgement of the operator. THIS INFORMATION IS FOR DESIGN PURPOSES ONLY.

LETTER BOREHOLE - MODOT 20150728.GDT - 4/26/22 11:38 - Z:\SG\GINT\PROJECT FILES\J7S0532-A9230.GPJ

FOR INFORMATION ONLY NOT FOR CONSTRUCTION

DATE PREPARED 4/17/2023
ROUTE 90 STATE MO
DISTRICT BR SHEET NO. 37
COUNTY McDONALD
JOB NO. J7S0532
CONTRACT ID.
PROJECT NO.
BRIDGE NO. A9230

DESCRIPTION
DATE

MISSOURI HIGHWAYS AND TRANSPORTATION COMMISSION
105 WEST CAPITOL
JEFFERSON CITY, MO 65102
1-888-ASK-MODOT (1-888-275-6636)

EFK•Moen
Civil Engineering Design
13523 Barrett Parkway Dr, Suite 250
St. Louis, MO 63021
314-394-3100
Missouri Certificate of Authority: 001578

IF A SEAL IS PRESENT ON THIS SHEET IT HAS BEEN ELECTRONICALLY SEALED AND DATED

REV.

BORING DATA

Note: For locations of borings, see Sheet No. 1.

Detailed Feb. 2023
Checked Feb. 2023

Note: This drawing is not to scale. Follow dimensions.

Missouri Department of Transportation
Construction and Materials

BORING NO. Z7A
Page 1 of 1

Job No.:	J7S0532	**County:**	McDonald	**Route:**	MO 90
Design:	A9230	**Skew:**	45 RA	**Location:**	Over Little Sugar Creek
Bent:	4	**Logged By:**	Matthew Kistler	**Operator:**	Kenneth Tuttle
Station:	74+87.3	**Northing:**	140380.5	**Date of Work:**	04/05/22-04/05/22
Offset:	9.0 L	**Easting:**	2853014.2	**Depth to Water:**	
Elevation:	934.0	**Requested Northing:**	140377.7	**Depth Hole Open:**	
Requested Station:	74+55.3	**Requested Easting:**	2852983	**Time Change:**	
Requested Offset:	9 L	**Equipment:**	Mobile B-31		
Requested Elevation:	934.0	**Location Note:**	Offset to avoid riprap.		
Drill No.:	G-9290	**Hammer Efficiency:**		**Drilling Method:**	Continuous Flight Auger

Depth (ft)	Graphic	Description	Elevation (ft)	Sample Type	REC % (RQD %)	Blow Counts (N_{60})	Field Tests	Specimen Info
0		0.0-0.3' ASPHALT						
		0.3-12.9' Brown, GRAVELLY LEAN CLAY, medium stiff, moist to wet						
			930					
5								
			925					
10								
		12.9-13.0' Dolomite, highly weathered						
		13.0-13.4' Dolomite, moderately weathered to slightly weathered						
		Bottom of borehole at 13.4 feet.						

N_{60} = (Em/60)Nm N_{60} - Corrected N value for standard 60% SPT efficiency; Em - Measured hammer efficency in percent; Nm - Observed N-value
(1) = Assumed, (2) = Actual

Coordinate System: Modified U.S. State Plane 1983 **Coordinate Zone:** Missouri West **Coordinate Proj. Factor:** 1.0000935

Coordinate Datum: NAD 83 (CONUS) **Coordinate Units:** U.S. Survey Feet

* Persons using this information are cautioned that the materials shown are determined by the equipment noted and accuracy of the "log of materials" is limited thereby and by judgement of the operator. THIS INFORMATION IS FOR DESIGN PURPOSES ONLY.

LETTER BOREHOLE - FIELD LOG - MODOT 20150728.GDT - 4/26/22 14:41 - Z:\SG\GINT\PROJECT FILES\J7S0532-A9230.GPJ

MoDOT-Geotechnical Section
1617 Missouri Blvd
Jefferson City, MO 65109

KEY TO SYMBOLS

CLIENT **PROJECT NAME** Bridge Replacement
PROJECT NUMBER J7S0532 **PROJECT LOCATION** Over Little Sugar Creek

LITHOLOGIC SYMBOLS (Unified Soil Classification System)

- Asphalt
- USCS Low Plasticity Clay
- USCS Low Plasticity Gravelly Clay
- Concrete
- Dolomite
- USCS Poorly-graded Gravel
- Highly Weathered Dolomite
- No Core
- Water

SAMPLER SYMBOLS

- Rock Core Barrel
- Grab Sample
- Split-Spoon Sampler

WELL CONSTRUCTION SYMBOLS

ABBREVIATIONS

LL - LIQUID LIMIT (%)
PI - PLASTIC INDEX (%)
W - MOISTURE CONTENT (%)
DD - DRY DENSITY (PCF)
NP - NON PLASTIC
-200 - PERCENT PASSING NO. 200 SIEVE
PP - POCKET PENETROMETER (TSF)
Qu - UNCONFINED COMPRESSIVE STRENGTH (PSF)

TV - TORVANE
PID - PHOTOIONIZATION DETECTOR
UC - UNCONFINED COMPRESSION
ppm - PARTS PER MILLION

Water Level at Time of Drilling
Water Level at End of Drilling
Water Level after Drilling

KEY TO SYMBOLS - MODOT 20150728.GDT - 4/26/22 12:47 - Z:\SG\GINT\PROJECT FILES\J7S0532-A9230.GPJ

FOR INFORMATION ONLY NOT FOR CONSTRUCTION

DATE PREPARED	
4/17/2023	
ROUTE 90	STATE MO
DISTRICT BR	SHEET NO. 38
COUNTY McDONALD	
JOB NO. J7S0532	
CONTRACT ID.	
PROJECT NO.	
BRIDGE NO. A9230	

DATE	DESCRIPTION

MISSOURI HIGHWAYS AND TRANSPORTATION COMMISSION
105 WEST CAPITOL
JEFFERSON CITY, MO 65102
1-888-ASK-MODOT (1-888-275-6636)

EFK•Moen
Civil Engineering Design
13523 Barrett Parkway Dr, Suite 250
St. Louis, MO 63021
314-394-3100
Missouri Certificate of Authority: 001578

IF A SEAL IS PRESENT ON THIS SHEET IT HAS BEEN ELECTRONICALLY SEALED AND DATED

REV.

BORING DATA

Note: For locations of borings, see Sheet No. 1.

Detailed Feb. 2023
Checked Feb. 2023

Note: This drawing is not to scale. Follow dimensions.

Z:\22001 MoDOT McDonald County Route 90 Bridge\DGN\Bridge\final\Plotsheets\B_A9230_038_J7S0532_Boring_Data.dgn 3:30:03 PM 4/17/2023

Missouri Department of Transportation
Construction and Materials

BORING NO. V-22-14 (Z1)

Job No.: J7S0532 **County:** McDonald **Route:** MO 90 **Logged By:** Matthew Kistler
Design: A9230 **Skew:** 45 RA **Coordinate Units:** U.S. Survey Feet **Operator:** Gary Degraffenreid
Bent: 1 **Location:** Over Little Sugar Creek **Coordinate Proj. Factor:** 1.0000935 **Date of Work:** 04/05/22-04/06/22
Station: 70+61.3 **Northing:** 140397.8 **Coordinate System:** Modified U.S. State Plane 1983 **Depth to Water:** 26.8
Offset: 10.0 L **Easting:** 2852587.6 **Coordinate Datum:** NAD 83 (CONUS) **Time Change:** At Time of Drilling
Elevation: 933.9 **Drilling Method:** Hollow Stem Auger **Coordinate Zone:** Missouri West **Depth Hole Open:** 26.8
Drill No.: G-9667 **Hammer Efficiency:** 92% **Equipment:** Acker Renegade ,Grab Sample, Split-Spoon Sampler, NQ

Depth (ft)	Graphic	Description	Elevation (ft)	Scour Parameters: Compressible	Downdrag	Scour	Total Unit Weight (pcf)	Effective Unit Weight (pcf)	Undrained Shear Strength Su or c (psf)	Pocket Pen (tsf)	Torvane (tsf)	Blow Counts (N_{60})	Internal Friction Angle ϕ'	Soil/Rock Strain ($\varepsilon_{50}/\varepsilon_{rm}$)	Lateral Subgrade Modulus K_i (pci)	Young's Modulus E_i (ksf)	Rock Quality Designation (RQD) (%)	Unconfined Compressive Strength Qu (ksf)
0		0 - 24.6' Stiff clay without free water																
			930															
							124(1)	124(1)				3-3-5 (12)		0.007	500			
10							121(1)	121(1)				2-3-3 (9)		0.009	250			
			920	no		no												
							120(1)	120(1)	2000(PP)	2.0		1-2-3 (8)		0.006	700			
20							116(1)	116(1)	3000(PP)	3.0		0-2-2 (6)		0.005	1000			
			910															
		24.6 - 26.8' Soft clay		no		no	108(1)	108(1)	500(PP)	0.5		0-0-2 (3)		0.013	65			
		26.8 - 32.8' Gravel																
30				no		no	117(1)	55(1)				5-3-4 (11)	32(1)		20			
		32.8 - 33.5' Weak rock	900	no		no								0.002	2000			
		33.5 - 43.5' Strong rock															16	
				no		no												
40		*(Continued Next Page)*					171.6(2) 168.8(2)	109(2) 106(2)						0.001	4000		98	1770 2040

(1) = Assumed, (2) = Actual, (3) = Phi' 0, (PP) = Pocket Penetrometer

Missouri Department of Transportation
Construction and Materials

BORING NO. V-22-14 (Z1)

Job No.: J7S0532 **County:** McDonald **Route:** MO 90 **Logged By:** Matthew Kistler
Design: A9230 **Skew:** 45 RA **Coordinate Units:** U.S. Survey Feet **Operator:** Gary Degraffenreid
Bent: 1 **Location:** Over Little Sugar Creek **Coordinate Proj. Factor:** 1.0000935 **Date of Work:** 04/05/22-04/06/22
Station: 70+61.3 **Northing:** 140397.8 **Coordinate System:** Modified U.S. State Plane 1983 **Depth to Water:** 26.8
Offset: 10.0 L **Easting:** 2852587.6 **Coordinate Datum:** NAD 83 (CONUS) **Time Change:** At Time of Drilling
Elevation: 933.9 **Drilling Method:** Hollow Stem Auger **Coordinate Zone:** Missouri West **Depth Hole Open:** 26.8
Drill No.: G-9667 **Hammer Efficiency:** 92% **Equipment:** Acker Renegade ,Grab Sample, Split-Spoon Sampler, NQ

Depth (ft)	Graphic	Description	Elevation (ft)	Scour Parameters: Compressible	Downdrag	Scour	Total Unit Weight (pcf)	Effective Unit Weight (pcf)	Undrained Shear Strength Su or c (psf)	Pocket Pen (tsf)	Torvane (tsf)	Blow Counts (N_{60})	Internal Friction Angle ϕ'	Soil/Rock Strain ($\varepsilon_{50}/\varepsilon_{rm}$)	Lateral Subgrade Modulus K_i (pci)	Young's Modulus E_i (ksf)	Rock Quality Designation (RQD) (%)	Unconfined Compressive Strength Qu (ksf)
40		33.5 - 43.5' Strong rock *(continued)*		no		no	162.1(2)	100(2)						0.001	4000		92	3110
		Bottom of borehole at 43.5 feet.																

(1) = Assumed, (2) = Actual, (3) = Phi' 0, (PP) = Pocket Penetrometer

BORING DATA

Note: For locations of borings, see Sheet No. 1.

Note: This drawing is not to scale. Follow dimensions.

EFK•Moen
Civil Engineering Design
13523 Barrett Parkway Dr, Suite 250
St. Louis, MO 63021
314-394-3100
Missouri Certificate of Authority: 001578

MISSOURI HIGHWAYS AND TRANSPORTATION COMMISSION
MoDOT
105 WEST CAPITOL
JEFFERSON CITY, MO 65102
1-888-ASK-MODOT (1-888-275-6636)

DATE	DESCRIPTION

BRIDGE NO. A9230
PROJECT NO.
CONTRACT ID.
JOB NO. J7S0532
COUNTY McDONALD
DISTRICT BR
ROUTE 90
SHEET NO. 39
STATE MO
DATE PREPARED 4/17/2023

FOR INFORMATION ONLY NOT FOR CONSTRUCTION

Detailed Feb. 2023
Checked Feb. 2023

Missouri Department of Transportation
Construction and Materials

BORING NO. V-22-13 (Z4)

Job No.: J7S0532 **County:** McDonald **Route:** MO 90 **Logged By:** Matthew Kistler
Design: A9230 **Skew:** 45 RA **Coordinate Units:** U.S. Survey Feet **Operator:** Gary Degraffenreid
Bent: 2 **Location:** Over Little Sugar Creek **Coordinate Proj. Factor:** 1.0000935 **Date of Work:** 04/05/22-04/05/22
Station: 72+22.8 **Northing:** 140376.2 **Coordinate System:** Modified U.S. State Plane 1983 **Depth to Water:** 26.8
Offset: 9.0 R **Easting:** 2852760.7 **Coordinate Datum:** NAD 83 (CONUS) **Time Change:** 0 hours
Elevation: 934.1 **Drilling Method:** Casing Advancer **Coordinate Zone:** Missouri West **Depth Hole Open:** 26.8
Drill No.: G-9667 **Hammer Efficiency:** 92% **Equipment:** Acker Renegade ,Grab Sample, NQ

Depth (ft)	Graphic	Description	Elevation (ft)	Scour Parameters: Compressible	Downdrag	Scour	Total Unit Weight (pcf)	Effective Unit Weight (pcf)	Undrained Shear Strength Su or c (psf)	Pocket Pen (tsf)	Torvane (tsf)	Blow Counts (N_{60})	Internal Friction Angle ϕ'	Soil/Rock Strain ($\varepsilon_{50}/\varepsilon_{rm}$)	Lateral Subgrade Modulus K_t (pci)	Young's Modulus E_i (ksf)	Rock Quality Designation (RQD) (%)	Unconfined Compressive Strength Qu (ksf)
0																		
			930															
10																		
			920															
20																		
			910															
30		28.4 - 32.1' Gravel		no		yes												
		32.1 - 32.5' Weak rock		no		no								0.002	2000			
		32.5 - 34.1' Strong rock	900	no		no								0.001	4000		0	
		34.4 - 60.5' Strong rock												0.001	4000			
				no		no	164.8(2)	102(2)									84	1500
40		*(Continued Next Page)*																

(1) = Assumed, (2) = Actual, (3) = Phi' 0, (PP) = Pocket Penetrometer

LPILE SUMMARY - MODOT_20150812.GDT - 4/26/22 12:38 - Z:\SIGN\TIPROJECT FILES\J7S0532-A9230.GPJ

Missouri Department of Transportation
Construction and Materials

BORING NO. V-22-13 (Z4)

Job No.: J7S0532 **County:** McDonald **Route:** MO 90 **Logged By:** Matthew Kistler
Design: A9230 **Skew:** 45 RA **Coordinate Units:** U.S. Survey Feet **Operator:** Gary Degraffenreid
Bent: 2 **Location:** Over Little Sugar Creek **Coordinate Proj. Factor:** 1.0000935 **Date of Work:** 04/05/22-04/05/22
Station: 72+22.8 **Northing:** 140376.2 **Coordinate System:** Modified U.S. State Plane 1983 **Depth to Water:** 26.8
Offset: 9.0 R **Easting:** 2852760.7 **Coordinate Datum:** NAD 83 (CONUS) **Time Change:** 0 hours
Elevation: 934.1 **Drilling Method:** Casing Advancer **Coordinate Zone:** Missouri West **Depth Hole Open:** 26.8
Drill No.: G-9667 **Hammer Efficiency:** 92% **Equipment:** Acker Renegade ,Grab Sample, NQ

Depth (ft)	Graphic	Description	Elevation (ft)	Scour Parameters: Compressible	Downdrag	Scour	Total Unit Weight (pcf)	Effective Unit Weight (pcf)	Undrained Shear Strength Su or c (psf)	Pocket Pen (tsf)	Torvane (tsf)	Blow Counts (N_{60})	Internal Friction Angle ϕ'	Soil/Rock Strain ($\varepsilon_{50}/\varepsilon_{rm}$)	Lateral Subgrade Modulus K_t (pci)	Young's Modulus E_i (ksf)	Rock Quality Designation (RQD) (%)	Unconfined Compressive Strength Qu (ksf)
40		34.4 - 60.5' Strong rock *(continued)*																
			890				161.8(2)	99(2)						0.001	4000		80	874
50				no		no	165.3(2)	103(2)									86	1670
			880				172.2(2)	110(2)						0.001	4000		90	2810
60							163.5(2)	101(2)									84	1700
		Bottom of borehole at 60.5 feet.																

(1) = Assumed, (2) = Actual, (3) = Phi' 0, (PP) = Pocket Penetrometer

LPILE SUMMARY - MODOT_20150812.GDT - 4/26/22 12:38 - Z:\SIGN\TIPROJECT FILES\J7S0532-A9230.GPJ

BORING DATA

Note: For locations of borings, see Sheet No. 1.

Note: This drawing is not to scale. Follow dimensions.

Z:\22001 MoDOT McDonald County Route 90 Bridge\DGN\Bridge\final\Plotsheets\B_A9230_040_J7S0532_Boring_Data.dgn 3:31:32 PM 4/17/2023

EFK•Moen
Civil Engineering Design
13523 Barrett Parkway Dr, Suite 250
St. Louis, MO 63021
314-394-3100
Missouri Certificate of Authority: 001578

MISSOURI HIGHWAYS AND TRANSPORTATION COMMISSION
MoDOT
105 WEST CAPITOL
JEFFERSON CITY, MO 65102
1-888-ASK-MODOT (1-888-275-6636)

DATE	DESCRIPTION

BRIDGE NO. A9230
PROJECT NO.
CONTRACT ID.
JOB NO. J7S0532
COUNTY McDONALD
DISTRICT BR
ROUTE 90
STATE MO
SHEET NO. 40
DATE PREPARED 4/17/2023

FOR INFORMATION ONLY NOT FOR CONSTRUCTION

REV.

IF A SEAL IS PRESENT ON THIS SHEET IT HAS BEEN ELECTRONICALLY SEALED AND DATED

Detailed Feb. 2023
Checked Feb. 2023

Missouri Department of Transportation
Construction and Materials

BORING NO. V-22-15 (Z5)

Job No.: J7S0532	**County:** McDonald	**Route:** MO 90	**Logged By:** Matthew Kistler
Design: A9230	**Skew:** 45 RA	**Coordinate Units:** U.S. Survey Feet	**Operator:** Gary Degraffenreid
Bent: 3	**Location:** Over Little Sugar Creek	**Coordinate Proj. Factor:** 1.0000935	**Date of Work:** 04/06/22-04/06/22
Station: 73+35.3	**Northing:** 140381.9	**Coordinate System:** Modified U.S. State Plane 1983	**Depth to Water:** 26.8
Offset: 9.0 L	**Easting:** 2852863	**Coordinate Datum:** NAD 83 (CONUS)	**Time Change:** 0 hours
Elevation: 934	**Drilling Method:** Casing Advancer	**Coordinate Zone:** Missouri West	**Depth Hole Open:** 0.5
Drill No.: G-9667	**Hammer Efficiency:** 92%	**Equipment:** Acker Renegade ,NQ	

Depth (ft)	Graphic	Description	Elevation (ft)	Scour Parameters: Compressible	Downdrag	Scour	Total Unit Weight (pcf)	Effective Unit Weight (pcf)	Undrained Shear Strength Su or c (psf)	Pocket Pen (tsf)	Torvane (tsf)	Blow Counts (N_{60})	Internal Friction Angle ϕ'	Soil/Rock Strain ($\varepsilon_{50}/\varepsilon_{rm}$)	Lateral Subgrade Modulus K_t (pci)	Young's Modulus E_i (ksf)	Rock Quality Designation (RQD) (%)	Unconfined Compressive Strength Qu (ksf)
0																		
			930															
10																		
			920															
20																		
			910															
30																		
		31.7 - 32' Weak rock		no		no								0.002	2000			
		32 - 60' Strong rock	900				164(2)	102(2)						0.001	4000		60	3060
				no		no												
							173.1(2)	111(2)									84	2730
40		(Continued Next Page)																

(1) = Assumed, (2) = Actual, (3) = Phi' 0, (PP) = Pocket Penetrometer

Missouri Department of Transportation
Construction and Materials

BORING NO. V-22-15 (Z5)

Job No.: J7S0532	**County:** McDonald	**Route:** MO 90	**Logged By:** Matthew Kistler
Design: A9230	**Skew:** 45 RA	**Coordinate Units:** U.S. Survey Feet	**Operator:** Gary Degraffenreid
Bent: 3	**Location:** Over Little Sugar Creek	**Coordinate Proj. Factor:** 1.0000935	**Date of Work:** 04/06/22-04/06/22
Station: 73+35.3	**Northing:** 140381.9	**Coordinate System:** Modified U.S. State Plane 1983	**Depth to Water:** 26.8
Offset: 9.0 L	**Easting:** 2852863	**Coordinate Datum:** NAD 83 (CONUS)	**Time Change:** 0 hours
Elevation: 934	**Drilling Method:** Casing Advancer	**Coordinate Zone:** Missouri West	**Depth Hole Open:** 0.5
Drill No.: G-9667	**Hammer Efficiency:** 92%	**Equipment:** Acker Renegade ,NQ	

Depth (ft)	Graphic	Description	Elevation (ft)	Scour Parameters: Compressible	Downdrag	Scour	Total Unit Weight (pcf)	Effective Unit Weight (pcf)	Undrained Shear Strength Su or c (psf)	Pocket Pen (tsf)	Torvane (tsf)	Blow Counts (N_{60})	Internal Friction Angle ϕ'	Soil/Rock Strain ($\varepsilon_{50}/\varepsilon_{rm}$)	Lateral Subgrade Modulus K_t (pci)	Young's Modulus E_i (ksf)	Rock Quality Designation (RQD) (%)	Unconfined Compressive Strength Qu (ksf)
40		32 - 60' Strong rock *(continued)*																
			890				170.2(2)	108(2)						0.001	4000		74	2330
50							163.5(2)	101(2)						0.001	4000		34	3240
				no		no												
			880				169(2)	107(2)									74	1510
							163.3(2)	101(2)						0.001	4000		62	2070
60		Bottom of borehole at 60.0 feet.																

(1) = Assumed, (2) = Actual, (3) = Phi' 0, (PP) = Pocket Penetrometer

LPILE SUMMARY - MODOT_20150812.GDT - 4/26/22 12:38 - Z:\SIGN\TPROJECT FILES\J7S0532-A9230.GPJ

BORING DATA

Note: For locations of borings, see Sheet No. 1.

Note: This drawing is not to scale. Follow dimensions.

Z:\22001 MoDOT McDonald County Route 90 Bridge\DGN\Bridge\final\Plotsheets\B_A9230_041_J7S0532_Boring_Data.dgn 3:32:15 PM 4/17/2023

EFK•Moen
Civil Engineering Design
13523 Barrett Parkway Dr, Suite 250
St. Louis, MO 63021
314-394-3100
Missouri Certificate of Authority: 001578

MISSOURI HIGHWAYS AND TRANSPORTATION COMMISSION
MoDOT
105 WEST CAPITOL
JEFFERSON CITY, MO 65102
1-888-ASK-MODOT (1-888-275-6636)

DATE	DESCRIPTION

BRIDGE NO. A9230 | PROJECT NO. | CONTRACT ID. | JOB NO. J7S0532 | COUNTY McDONALD | DISTRICT BR | ROUTE 90 | STATE MO | SHEET NO. 41 | DATE PREPARED 4/17/2023

FOR INFORMATION ONLY NOT FOR CONSTRUCTION

REV.

IF A SEAL IS PRESENT ON THIS SHEET IT HAS BEEN ELECTRONICALLY SEALED AND DATED

Detailed Feb. 2023
Checked Feb. 2023

Missouri Department of Transportation
Construction and Materials

BORING NO. V-22-16 (Z8)

Job No.: J7S0532	**County:** McDonald	**Route:** MO 90	**Logged By:** Matthew Kistler
Design: A9230	**Skew:** 45 RA	**Coordinate Units:** U.S. Survey Feet	**Operator:** Gary Degraffenreid
Bent: 4	**Location:** Over Little Sugar Creek	**Coordinate Proj. Factor:** 1.0000935	**Date of Work:** 04/07/22-04/07/22
Station: 74+84.3	**Northing:** 140361.5	**Coordinate System:** Modified U.S. State Plane 1983	**Depth to Water:** 11.9
Offset: 14.0 R	**Easting:** 2853019.8	**Coordinate Datum:** NAD 83 (CONUS)	**Time Change:**
Elevation: 933.9	**Drilling Method:** Hollow Stem Auger	**Coordinate Zone:** Missouri West	**Depth Hole Open:** 11.9
Drill No.: G-9667	**Hammer Efficiency:** 92%	**Equipment:** Acker Renegade ,Split-Spoon Sampler, NQ	

Depth (ft)	Graphic	Description	Elevation (ft)	Scour Parameters: Compressible	Scour Parameters: Downdrag	Scour Parameters: Scour	Total Unit Weight (pcf)	Effective Unit Weight (pcf)	Undrained Shear Strength Su or c (psf)	Pocket Pen (tsf)	Torvane (tsf)	Blow Counts (N_{60})	Internal Friction Angle ϕ'	Soil/Rock Strain ($\varepsilon_{50}/\varepsilon_{rm}$)	Lateral Subgrade Modulus K_t (pci)	Young's Modulus E_i (ksf)	Rock Quality Designation (RQD) (%)	Unconfined Compressive Strength q_u (ksf)
0		0 - 11.9' Stiff clay without free water	930															
				no		no	120(1)	120(1)	1250(PP)	1.25		1-2-3 (8)		0.008	375			
10							128(1)	128(1)	3500(PP)	3.5		3-5-9 (21)		0.005	1200			
		11.9 - 15.2' Weak rock	920	no		no												
		15.2 - 25.2' Strong rock										10/0.2'		0.002	2000			
							166.5(2)	104(2)						0.001	4000		78	1370
20				no		no								0.001	4000			
			910				167.3(2)	105(2)									100	2870
		Bottom of borehole at 25.2 feet.																

(1) = Assumed, (2) = Actual, (3) = Phi' 0, (PP) = Pocket Penetrometer

LPILE SUMMARY - MODOT_20150812.GDT - 4/26/22 12:38 - Z:\SIGIN\PROJECT FILES\J7S0532-A9230.GPJ

Note: This drawing is not to scale. Follow dimensions.

Note: For locations of borings, see Sheet No. 1.

BORING DATA

Z:\22001 MoDOT McDonald County Route 90 Bridge\DGN\Bridge\final\Plotsheets\B_A9230_042_J7S0532_Boring_Data.dgn 3:32:57 PM 4/17/2023

EFK•Moen
Civil Engineering Design
13523 Barrett Parkway Dr, Suite 250
St. Louis, MO 63021
314-394-3100
Missouri Certificate of Authority: 001578

MISSOURI HIGHWAYS AND TRANSPORTATION COMMISSION
MoDOT
105 WEST CAPITOL
JEFFERSON CITY, MO 65102
1-888-ASK-MODOT (1-888-275-6636)

DATE	DESCRIPTION

BRIDGE NO. A9230 | PROJECT NO. | CONTRACT ID. | JOB NO. J7S0532 | COUNTY McDONALD | DISTRICT BR | SHEET NO. 42 | ROUTE 90 | STATE MO | DATE PREPARED 4/17/2023

FOR INFORMATION ONLY NOT FOR CONSTRUCTION

REV.

IF A SEAL IS PRESENT ON THIS SHEET IT HAS BEEN ELECTRONICALLY SEALED AND DATED