09/08/2026
Released for Construction

(127'-127.8'-128.1')(155.6'-154.5') PRESTRESSED CONCRETE NU GIRDER SPANS

SEC/SUR 8 TWP 48N RGE 13W

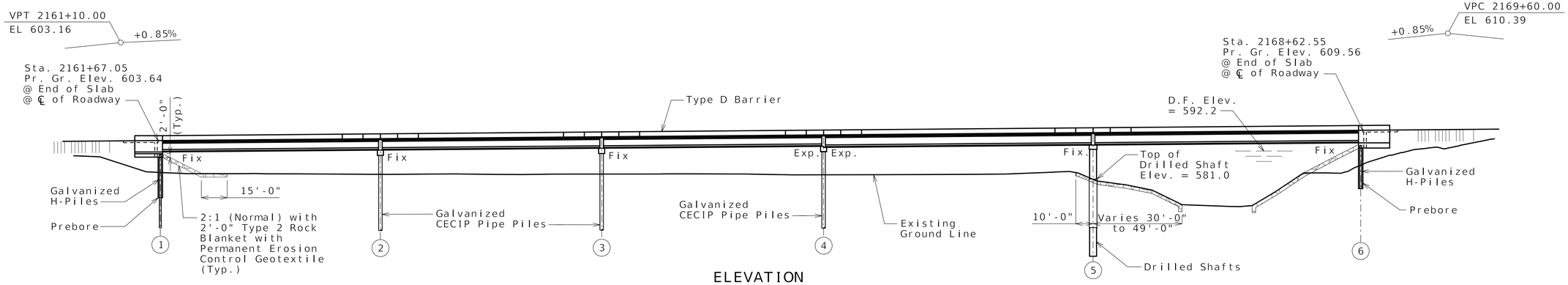

ELEVATION

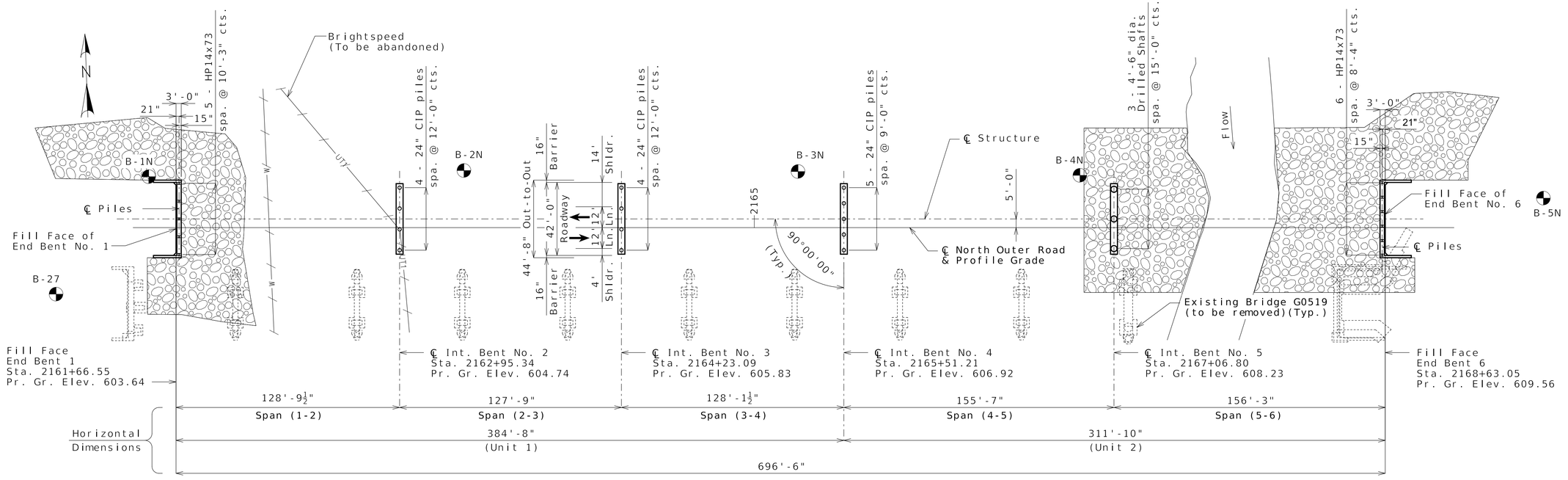

PLAN

Indicates location of borings.

Notice and Disclaimer Regarding Boring Log Data

The locations of all subsurface borings for this structure are shown on the plan sheet(s) for this structure. The boring data for all locations indicated, as well as any other boring logs or other factual records of subsurface data and investigations are shown on Sheets No. 41-48.

B.M. 1034 - ELEVATION 594.306
MoGCS-i70 LOW DISTORTION
LOW DISTORTION PROJECTION DEVELOPED
FOR THE I-70 CORRIDOR "MO I-70 FT"
NORTHING 1684739.578
EASTING 723707.462
POINT DESCRIPTION IR W CAP

B.M. 1035 - ELEVATION 612.338
MoGCS-i70 LOW DISTORTION
LOW DISTORTION PROJECTION DEVELOPED
FOR THE I-70 CORRIDOR "MO I-70 FT"
NORTHING 1684680.747
EASTING 724684.837
POINT DESCRIPTION IR * WITH CAP * LEVEL

BRIDGE: NORTH OUTER ROAD OVER PERCHE CREEK GENERAL PLAN AND ELEVATION

ROUTE I-70 NORTH OUTER ROAD FROM ROUTE 40 TO ROUTE 740
ABOUT 1.1 MILES EAST OF ROUTE 40
BEGINNING STATION 2161+66.55

Designed MAC JUL 2026
Detailed CAB JUL 2026
Checked CMR AUG 2026

Note: This drawing is not to scale. Follow dimensions.

STATE OF MISSOURI
MARTIN ALAN RHORER
NUMBER PE-2013006488
PROFESSIONAL ENGINEER

DATE PREPARED 2-SEP-2026
ROUTE I-70 | STATE MO
DISTRICT BR | SHEET NO. BR05-01
COUNTY BOONE
JOB NUMBER JST0017
CONTRACT ID. 251203-D01
PROJECT NO. IS 70-2(128)
BRIDGE NO. A9820

REV	DATE	DESCRIPTION
0	090426	RFC BRIDGE A9820

IF A SEAL IS PRESENT ON THIS SHEET IT HAS BEEN ELECTRONICALLY SEALED AND DATED.

MISSOURI HIGHWAYS AND TRANSPORTATION COMMISSION
105 WEST CAPITOL
JEFFERSON CITY, MO 65102
1-888-ASK-MODOT (1-888-275-6636)

IMPROVE I-70 ROCHEPORT TO COLUMBIA

EMERY SAPPE & SONS, INC

HORNER SHIFRIN
THE POWER OF BEING UNDERSTOOD
401 S. 18th St., Ste. 400
ST. LOUIS, MISSOURI 63103
314-531-4321 FAX 314-531-6866
www.hornershifrin.com

MO STATE CERTIFICATE OF AUTHORITY #000159 ENGINEERING

REV. RevDesc

09/08/2026
Released for Construction

GENERAL NOTES

Design Specifications:

2020 AASHTO LRFD Bridge Design Specifications (9th Ed.)

Seismic:

2023 AASHTO Guide Specifications for LRFD Seismic Bridge Design (3rd Ed.).

Seismic Design Category = A2 (Nonseismic Details)

Design earthquake response spectral acceleration coefficient at 1.0 second period, $S_{D1} < 0.15$
Acceleration Coefficient (effective peak ground acceleration coefficient), As = N/A

Design Loading:

Vehicular = HL-93
Future Wearing Surface = 35 lb/sf
Earth = 120 lb/cf
Equivalent Fluid Pressure: 45 lb/cf (Min.)
Superstructure: Simply-Supported, Non-Composite for dead load. Continuous Composite for live load.

Design Unit Stresses:

Class B Concrete (Substructure).....f'c = 3,000 psi

Class B-2 Concrete (Drilled Shafts & Rock Sockets).....f'c = 4,000 psi

Class B-2 Concrete (Superstructure, except Prestressed Girders & Barrier).....f'c = 4,000 psi

Class B-1 Concrete (Barrier).....f'c = 4,000 psi

Reinforcing Steel (ASTM A615 Grade 60).....fy = 60,000 psi

Structural Steel HP Pile (ASTM A709 Grade 50).....fy = 50,000 psi

Welded or Seamless steel shell (pipe) for CIP pile (ASTM A252 Modified Grade 3).....fy = 50,000 psi

For prestressed girder stresses, see Sheets No. 18-21.

Neoprene Pads:

Neoprene bearing pads shall be 60 durometer and shall be in accordance with Sec 716.

Joint Filler:

All joint filler shall be in accordance with Sec 1057 for preformed sponge rubber expansion and partition joint filler, except as noted.

Reinforcing Steel:

Minimum clearance to reinforcing steel shall be 1 1/2", unless otherwise shown.

Minimum clearance between galvanized piles and uncoated (plain) reinforcing steel including bar supports shll be 1 1/2". Nylon, PVC, or polyethylene spacers shall be used to maintain clearance. Nylon cable ties shall be used to bind the spacers to the reinforcement.

Miscellaneous:

Roadway fill shall be completed to the final roadway section and up to the elevation of the bottom of the concrete beam within the limits of the structure and for not less than 25 feet in back of the fill face of the end bents before any piles are driven for any bents falling within the embankment section.

Concrete Protective Coatings:

Protective coating for concrete bents and piers (Epoxy) shall be applied as shown on the bridge plans and in accordance with Sec 711.

Stay-In-Place Corrugated Steel Forms:

Method of forming the slab shall be as shown on the plans and in accordance with Sec 703. All hardware for forming the slab to be left in place as a permanent part of the structure shall be coated in accordance with ASTM A123 or ASTM B633 with a thickness class SC 4 and a finish type I, II or III.

Slab shall be cast-in-place with conventional forms or stay-in-place corrugated steel forms. Precast prestressed panels will not be permitted.

Corrugated steel forms, supports, closure elements and accessories shall be in accordance with grade requirement and coating designation G165 of ASTM A653. Complete shop drawings of the permanent steel deck forms shall be required in accordance with Sec 1080.

Corrugations of stay-in-place forms shall be filled with an expanded polystyrene material. The polystyrene material shall be placed in the forms with an adhesive in accordance with the manufacturer's recommendations.

Form sheets shall not rest directly on the top of girder flanges. Sheets shall be securely fastened to form supports with a minimum bearing length of one inch on each end. Form supports shall be placed in direct contact with the flange. Welding on or drilling holes in the girder flanges will not be permitted. All steel fabrication and construction shall be in accordance with Sec 1080 and 712. Certified field welders will not be required for welding of the form supports.

Traffic Handling:

Structure to be closed during construction.

Foundation Data

Type	Design Data		Bent Number 1	2	3	4	5	6
Load Bearing Pile	Pile Type and Size		HP 14x73	CECIP 24"	CECIP 24"	CECIP 24"	-	HP 14x73
	Number	ea	5	4	4	5	-	6
	Approximate Length Per Each	ft	64	62	63	60	-	20
	Pile Point Reinforcement	ea	All	All	All	All	-	All
	Min. Galvanized Penetration (Elev.)	ft	572	564	564	564	-	Full Length
	Minimum Tip Penetration (Elev.)	ft	531	550	550	550	-	*
	Criteria for Min. Tip Penetration		Bear on Rock	Lateral Stability	Lateral Stability	Lateral Stability	-	-
	Est. Max. Scour Depth 100 (Elev.)	ft	-	578	578	578		-
	Pile Driving Verification Method		WEAP	DT	DT	DT	-	WEAP
	Resistance Factor		0.5	0.65	0.65	0.65	-	0.5
	Minimum Nominal Axial Compressive Resistance	kip	710	1530	1530	1365	-	720
Rock Socket	Number		-	-	-	-	3	-
	Foundation Material		-	-	-	-	Rock	-
	Elevation Range	ft	-	-	-	-	538-513	-
	Design Side Friction Minimum Nominal Axial Compressive Resistance (Side Resistance)	ksf	-	-	-	-	30.2	-
	Design End Bearing Minimum Nominal Axial Compressive Resistance (Tip Resistance)	ksf	-	-	-	-	400	-

CECIP = Closed Ended Cast-In-Place concrete pile

DT = Dynamic Testing

WEAP = Wave Equation Analysis of Piles

Minimum Nominal Axial Compressive Resistance = Maximum Factored Loads/Resistance Factor

* Prebore for piles at End Bent No. 1 to Elevation 575 and at Bent No. 6 to Elevation 580. Prebore for piles at End Bent No. 1 shall be in accordance with Sec 702. For End Bent No. 6, see prebore detail on Sheet 16.

All piles shall be galvanized down to the minimum galvanized penetration (elevation).

Pile point reinforcement need not be galvanized. Shop drawings will not be required for pile point reinforcement.

The contractor shall make every effort to achieve the minimum galvanized penetration (elevation) shown on the plans for all piles. Deviations in penetration less than 5 feet of the minimum will be considered acceptable provided the contractor makes the necessary corrections to ensure the minimum penetration is achieved on subsequent piles.

All piles are anticipated to be driven to refusal on rock. Review all boringsfor depth of rock and restrict driving as appropriate to comply with hard rockdriving criteria in accordance with Sec 702. When pile refusal on rock occurs, as approved by the engineer, the minimum nominal axial compressive resistance is verified and no additional pile driving verification method is required.

Estimated Maximum Scour Depth (Elevation) shown is for verifying Minimum Nominal Axial Compressive Resistance using dynamic testing only where pile resistance contribution above this elevation shall not be considered.

Hydrologic Data

Drainage Area = 278 mi^2
Design Flood Frequency = 50 years
Design Flood Discharge = 28,800 cfs
Design Flood (D.F.) Elevation = 592.2
Base Flood (100-year)
Base Flood Elevation = 593.5
Base Flood Discharge = 34,500 cfs
Estimated Backwater = 1.0 ft
Average Velocity thru Opening = 6.0ft/s
Freeboard (50-year)
Freeboard = 8.3 ft
Roadway Overtopping
Overtopping Flood Discharge = N/A
Overtopping Flood Frequency = >500 years
500-year Flood Elevation = 596.1

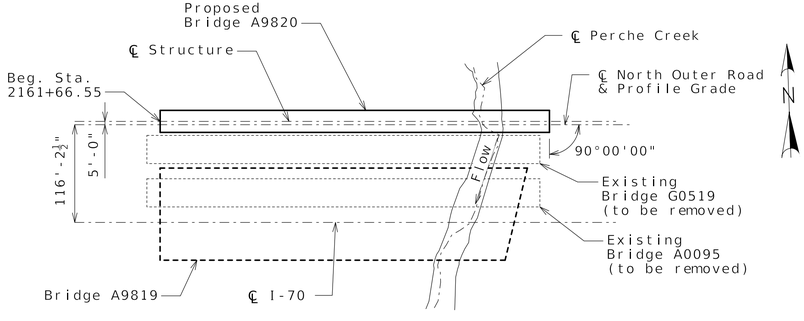

LOCATION SKETCH

GENERAL NOTES AND FOUNDATION DATA

Designed MAC APR 2026
Detailed CAB APR 2026
Checked CMR AUG 2026

Note: This drawing is not to scale. Follow dimensions.

STATE OF MISSOURI
MARTIN ALAN THORNER
NUMBER PE-2013006488
PROFESSIONAL ENGINEER
4-1-26

DATE PREPARED: 2-SEP-2026
ROUTE: I-70 | STATE: MO
DISTRICT: BR | SHEET NO.: BR05-02
COUNTY: BOONE
JOB NUMBER: JST0017
CONTRACT ID.: 251203-D01
PROJECT NO.: IS 70-2(128)
BRIDGE NO.: A9820

REV	DATE	DESCRIPTION
0	090426	RFC BRIDGE A9820

IF A SEAL IS PRESENT ON THIS SHEET IT HAS BEEN ELECTRONICALLY SEALED AND DATED.

MISSOURI HIGHWAYS AND TRANSPORTATION COMMISSION
105 WEST CAPITOL
JEFFERSON CITY, MO 65102
1-888-ASK-MODOT (1-888-275-6636)

IMPROVE I-70 ROCHEPORT TO COLUMBIA

MO STATE CERTIFICATE OF AUTHORITY #000159 ENGINEERING

EMERY SAPPS SOWS, INC

HORNER SHIFRIN
THE POWER OF EXPERIENCE
401 S 18th St, Ste 400
St. Louis, MO 63103
314-531-1021 FAX: 314-531-0966
www.HornerShifrin.com

REV: RevDesc

09/08/2026
Released for Construction

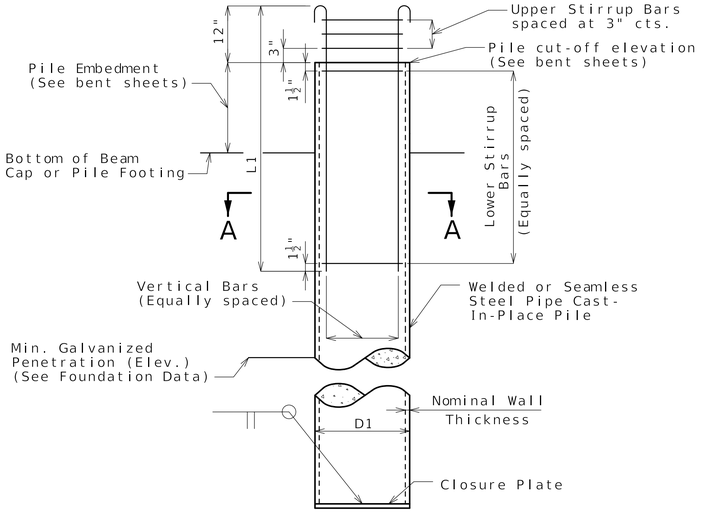

GALVANIZED CLOSED ENDED CAST-IN-PLACE (CECIP) CONCRETE PILE
WITHOUT PILE POINT REINFORCEMENT

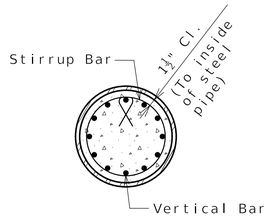

SECTION A-A

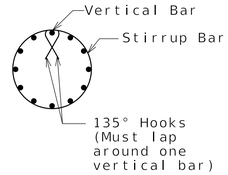

DETAIL OF SEISMIC STIRRUP BAR

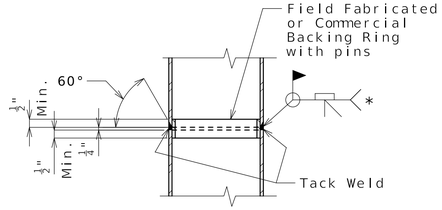

STEEL PIPE PILE SPLICE

* Galvanizing material shall be omitted or removed one inch clear of weld locations in accordance with Sec 702.

Cruciform Pile Point Reinforcement Data				
D1, CECIP Pile (O.D.)	14"	16"	20"	24"
B1	14"	16"	20"	24"
B2	6"	7"	8 7/8"	10 5/8"
B3	5 7/8"	6 7/8"	8 3/4"	10 1/2"
B4	6 5/8"	7 5/8"	9 1/2"	11 1/4"
B5	2"	2"	2 1/4"	2 3/4"
B6	3/4"	3/4"	1"	1 1/2"
H1	9 1/8"	10 1/2"	13"	15 3/8"
H2	8 1/8"	9 1/2"	12"	14 3/8"
H3	8 3/8"	9 3/4"	12 1/4"	14 5/8"
T1 and T2 Plate Thickness	3/4"	3/4"	1"	1 1/2"

Galvanized Closed Ended Cast-In-Place (CECIP) Concrete Pile Data			
Bent Number	2	3	4
D1, CECIP Pile (O.D.)	24"	24"	24"
Min. Nominal Wall Thickness	¾"	¾"	¾"
Closure Plate Thickness	1½"	1½"	1½"
Pile Point Reinforcement	Cruciform	Cruciform	Cruciform
Vertical Bars	12-#6-V200	12-#6-V300	12-#6-V400
L1, Length of Vertical Bars	7'-3"	7'-3"	7'-3"
Upper Stirrup Bars	3-#4-P200	3-#4-P300	3-#4-P400
Lower Stirrup Bars	7-#4-P200	7-#4-P300	7-#4-P400

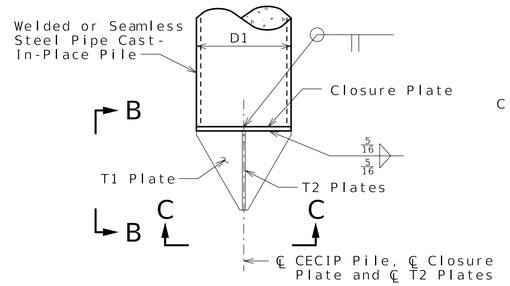

CRUCIFORM PILE POINT

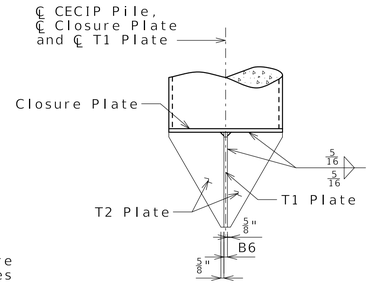

ELEVATION B-B

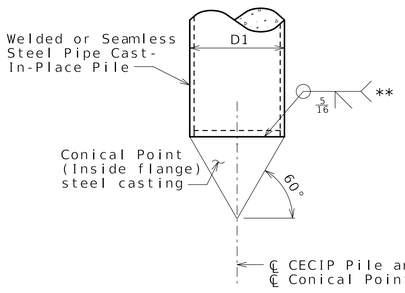

MANUFACTURED CONICAL PILE POINT

(Omit closure plate)

** If the conical pile point is not pre-beveled, place a 3/8" bevel at 40 degrees on the pipe.

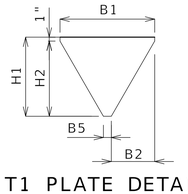

T1 PLATE DETAILS

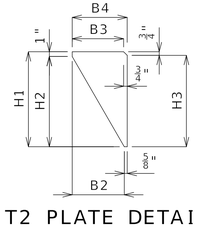

T2 PLATE DETAILS (2 REQUIRED)

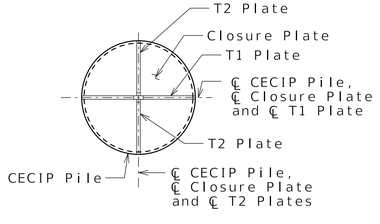

SECTION C-C

CRUCIFORM PILE POINT REINFORCEMENT

Notes:

Welded or seamless steel shell (pipe) shall be ASTM A252 Modified Grade 3 (fy = 50,000 psi) with physical and chemical requirements that meet ASTM A572 Grade 50. Pipe certification and source material certification shall be required.

Concrete for cast-in-place pile shall be Class B-1.

Steel for closure plate shall be ASTM A709 Grade 50.

Steel for cruciform pile point reinforcement shall be ASTM A709 Grade 50.

Steel casting for conical pile point reinforcement shall be ASTM A148 Grade 90-60.

The minimum wall thickness of any spot or local area of any type shall not be more than 12.5% under the specified nominal wall thickness.

The contractor shall determine the pile wall thickness required to avoid damage from all driving activities, but wall thickness shall not be less than the minimum specified.

Closure plate shall not project beyond the outside diameter of the pipe pile. Satisfactory weldments may be made by beveling tip end of pipe or by use of inside backing rings. In either case, proper gaps shall be used to obtain weld penetration full thickness of pipe.

Splices of pipe for cast-in-place concrete pile shall be made watertight and to the full strength of the pipe above and below the splice to permit hard driving without damage. Pipe damaged during driving shall be replaced without cost to the state. Pipe sections used for splicing shall be at least 5 feet in length.

At the contractor's option, the hooks of vertical bars embedded in the beam cap may be oriented inward or outward.

Closure plate need not be galvanized.

Reinforcing steel for cast-in-place piles is included in the Bill of Reinforcing Steel.

For Foundation Data table, see Sheet No. 2.

GALVANIZED CLOSED ENDED CAST-IN-PLACE (CECIP) CONCRETE PILE

STATE OF MISSOURI
MARTIN ALAN THORIN
NUMBER PE-2013006488
PROFESSIONAL ENGINEER
4-2-26

DATE PREPARED: 2-SEP-2026
ROUTE: I-70 | STATE: MO
DISTRICT: BR | SHEET NO.: BR05-03
COUNTY: BOONE
JOB NUMBER: JST0017
CONTRACT ID.: 251203-D01
PROJECT NO.: IS 70-2(128)
BRIDGE NO.: A9820

REV	DATE	DESCRIPTION
0	090426	RFC BRIDGE A9820

IF A SEAL IS PRESENT ON THIS SHEET IT HAS BEEN ELECTRONICALLY SEALED AND DATED.

MISSOURI HIGHWAYS AND TRANSPORTATION COMMISSION
105 WEST CAPITOL
JEFFERSON CITY, MO 65102
1-888-ASK-MODOT (1-888-275-6636)

IMPROVE I-70 ROCHEPORT TO COLUMBIA

MO STATE CERTIFICATE OF AUTHORITY #000159 ENGINEERING

HORNER SHIFRIN
THE POWER OF EXPERIENCE AND INNOVATION
401 S. 18th St., Ste. 400
St. Louis, MO 63103-2709
314-621-4321 FAX: 314-621-6866
www.HornerShifrin.com

EMERY SAPPS SONS, INC

REV. RevDesc

Designed MAC APR 2026
Detailed SLF APR 2026
Checked CMR AUG 2026

Note: This drawing is not to scale. Follow dimensions.

B_JST0017_A9820_03_Cast In Place Piles.dgn 1:03:08 AM Eastern 2-SEP-2026

09/08/2026
Released for Construction

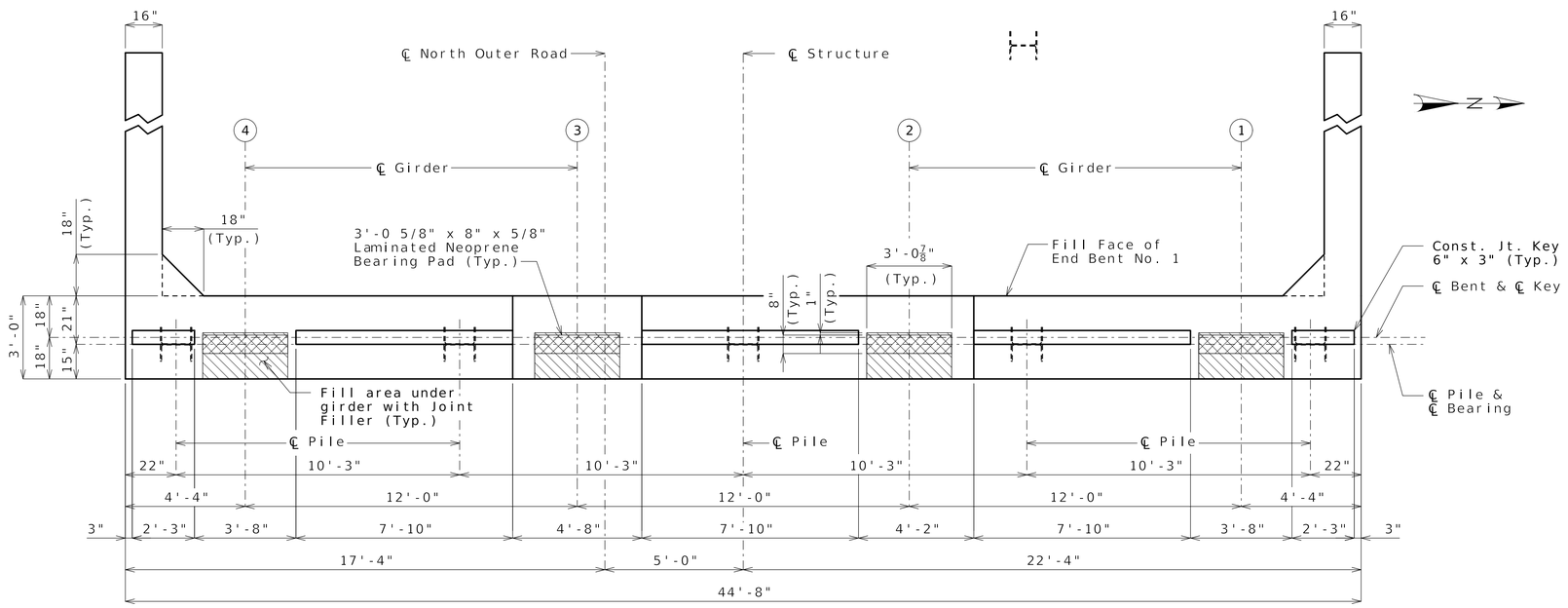

PLAN OF BEAM SHOWING DIMENSIONS

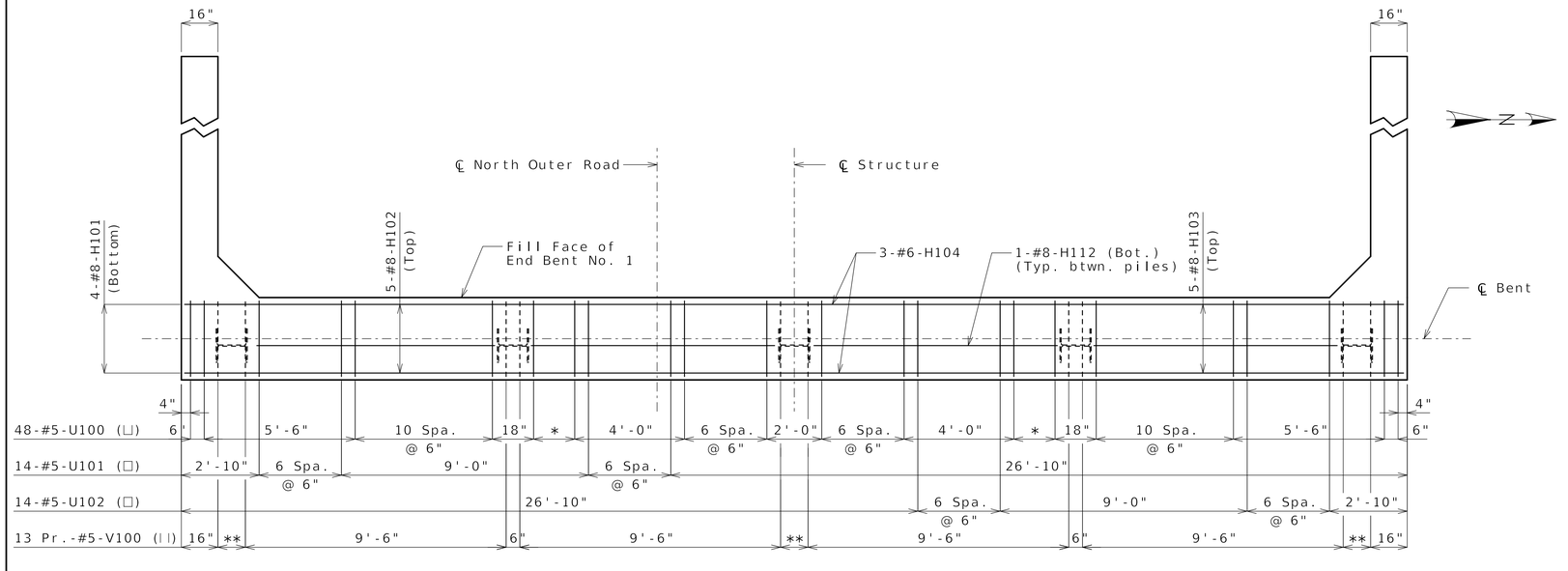

PLAN OF BEAM SHOWING REINFORCEMENT

* 3 Spa. @ 6"
** 2 Spa. @ 6"
(Beam steps and keys not shown for clarity)

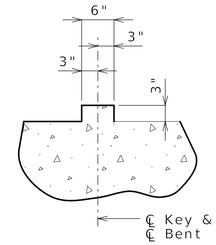

SECTION THRU KEY

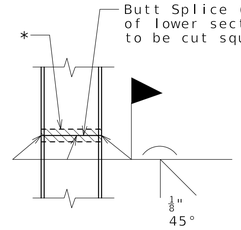

STEEL PILE SPLICE
(If required)

* Galvanizing material shall be omitted or removed one inch clear of weld locations in accordance with Sec 702.

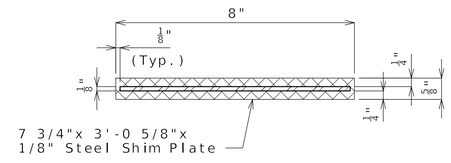

TYPICAL SECTION THRU
LAMINATED NEOPRENE BEARING PAD

Notes:

Work this sheet with Sheets No. 5 & 6.

For details of Vertical Drain at End Bents, see Sheet No. 7.

The U bars shall be placed parallel to centerline of roadway.

Reinforcing steel shall be shifted to clear piles. U bars shall clear piles by at least 1 1/2 inches.

DETAILS FOR END BENT NO. 1

STATE OF MISSOURI
MARTIN ALAN THORNE
NUMBER PE-2013006488
PROFESSIONAL ENGINEER
4-21-26

DATE PREPARED
2-SEP-2026

ROUTE	STATE
I-70	MO
DISTRICT	SHEET NO.
BR	BR05-04

COUNTY
BOONE

JOB NUMBER
JST0017

CONTRACT ID.
251203-D01

PROJECT NO.
IS 70-2(128)

BRIDGE NO.
A9820

REV	DATE	DESCRIPTION
0	090426	RFC BRIDGE A9820

IF A SEAL IS PRESENT ON THIS SHEET IT HAS BEEN ELECTRONICALLY SEALED AND DATED.

MISSOURI HIGHWAYS AND TRANSPORTATION COMMISSION

105 WEST CAPITOL
JEFFERSON CITY, MO 65102
1-888-ASK-MODOT (1-888-275-6636)

IMPROVE I-70 ROCHEPORT TO COLUMBIA

EMERY SAPP & SONS, INC

HORNER SHIFRIN
THE PONTIS BRIDGE SPECIALISTS
401 S. 18th St., Ste. 400
ST. LOUIS, MISSOURI 63103
314-531-1021 FAX: 314-531-0966
www.HornerShifrin.com

MO STATE CERTIFICATE OF AUTHORITY #000159 ENGINEERING

REV: RevDesc

Designed SR JUL 2026
Detailed CAB JUL 2026
Checked MAC JUL 2026

Note: This drawing is not to scale. Follow dimensions.

B_JST0017_A9820_04_End Bent 1.dgn 1:04:00 AM Eastern 2-SEP-2026

09/08/2026
Released for Construction

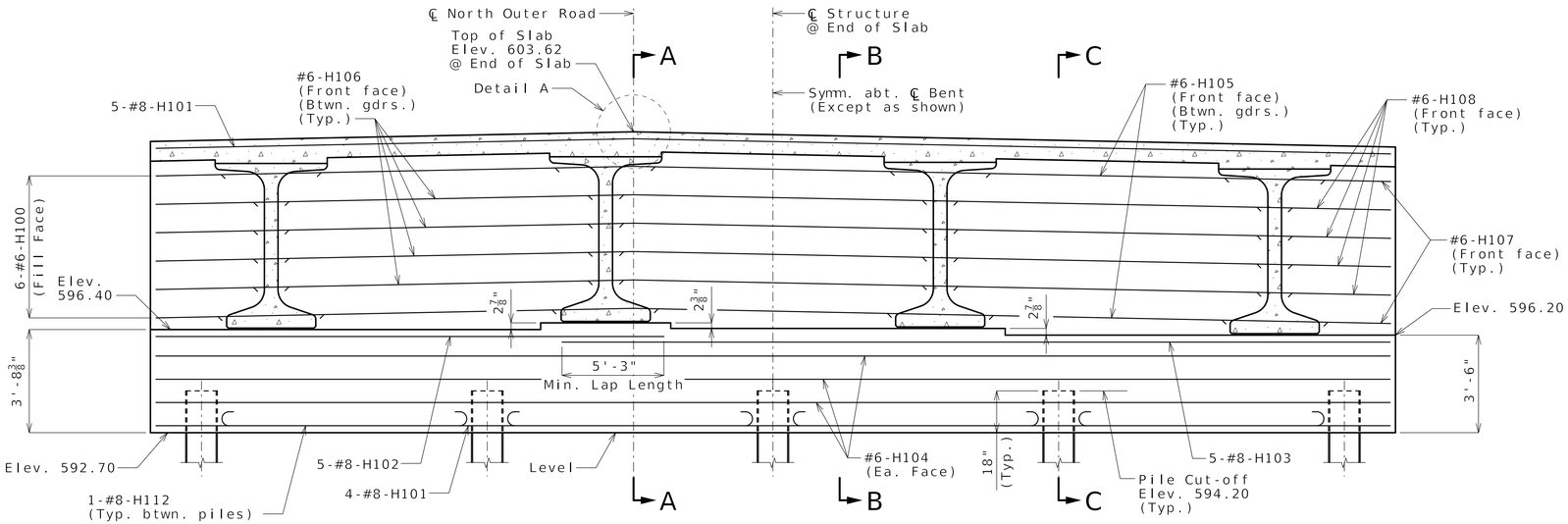

SECTION NEAR END BENT

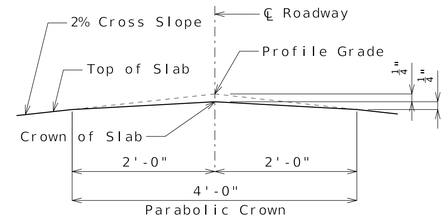

DETAIL A

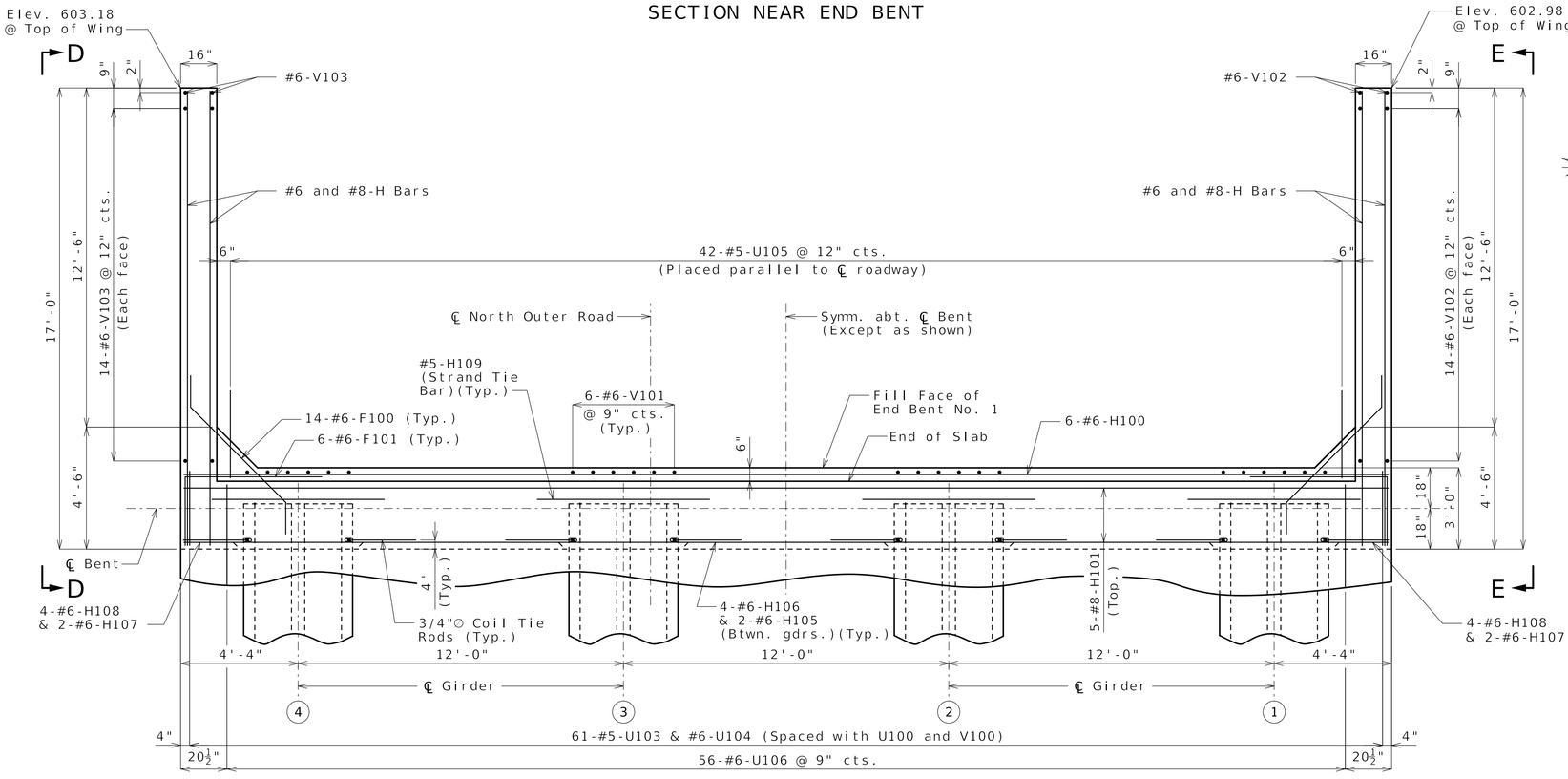

PART PLAN

Notes:

Work this sheet with Sheets No. 4 & 6.

For Sections A-A, B-B & C-C and Elevations D-D & E-E, see Sheet No. 6.

The #6-F100 bars shall be bent in field to clear girders.

The U bars shall be placed parallel to centerline of roadway.

All concrete in the end bent above top of beam and below top of slab shall be Class B-2.

Strands at end of girders shall be field bent or, if necessary, cut in field to maintain 1 1/2 inch minimum clearance to fill face of end bent.

For location of coil tie rods and #5-H109 (strand tie bar), see Sheet No. 18.

For details of vertical drain at end bents, see Sheet No. 7.

For details of bridge approach slab, see Sheet No. 35.

DETAILS FOR END BENT NO. 1

STATE OF MISSOURI
MARTIN ALAN THORIN
NUMBER
PE-2013006488
PROFESSIONAL ENGINEER
4-24

DATE PREPARED
2-SEP-2026

ROUTE	STATE
I-70	MO
DISTRICT	SHEET NO.
BR	BR05-05

COUNTY
BOONE

JOB NUMBER
JST0017

CONTRACT ID.
251203-D01

PROJECT NO.
IS 70-2(128)

BRIDGE NO.
A9820

REV	DATE	DESCRIPTION
0	090426	RFC BRIDGE A9820

IF A SEAL IS PRESENT ON THIS SHEET IT HAS BEEN ELECTRONICALLY SEALED AND DATED.

MISSOURI HIGHWAYS AND TRANSPORTATION COMMISSION
105 WEST CAPITOL
JEFFERSON CITY, MO 65102
1-888-ASK-MODOT (1-888-275-6636)

IMPROVE I-70 ROCHEPORT TO COLUMBIA

MO STATE CERTIFICATE OF AUTHORITY #000159 ENGINEERING

HORNER SHIFRIN
THE POWER OF EXPERIENCE
401 S. 18th St., Ste. 400
St. Louis, MO 63103
314-531-4321 FAX 314-531-6866
www.HornerShifrin.com

EMERY SAPPE SONS, INC

REV. RevDesc

Designed SR JUL 2026
Detailed CAB JUL 2026
Checked MAC JUL 2026

Note: This drawing is not to scale. Follow dimensions.

B_JST0017_A9820_05_End Bent 1.dgn 1:04:01 AM Eastern 2-SEP-2026

09/08/2026
Released for Construction

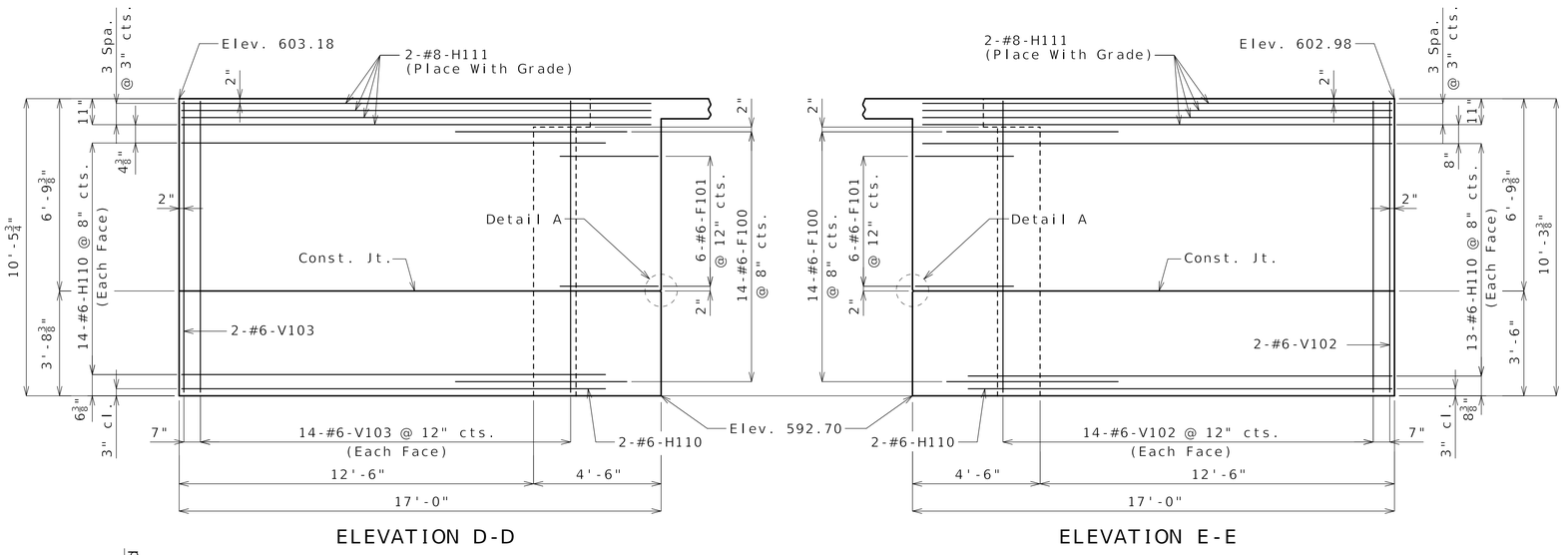

ELEVATION D-D

ELEVATION E-E

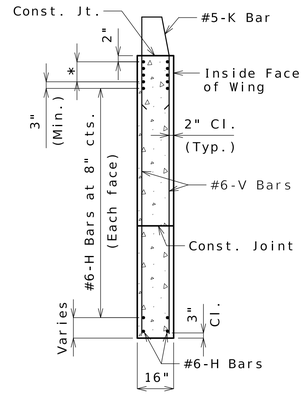

TYPICAL SECTION THRU WING

* #8-H Bars at 3" cts. (Each face)(Place with grade)

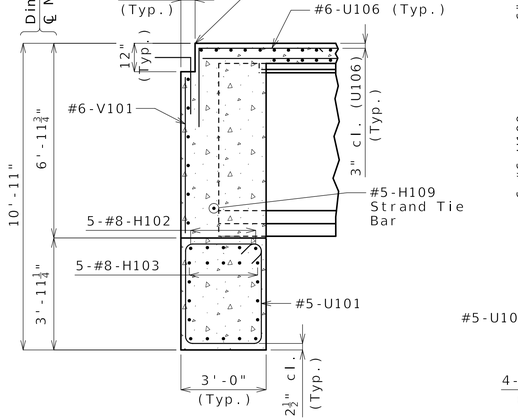

SECTION A-A

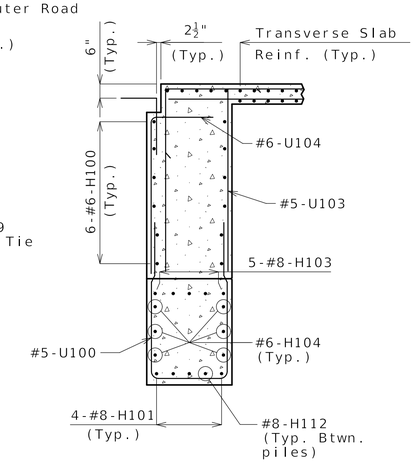

SECTION B-B

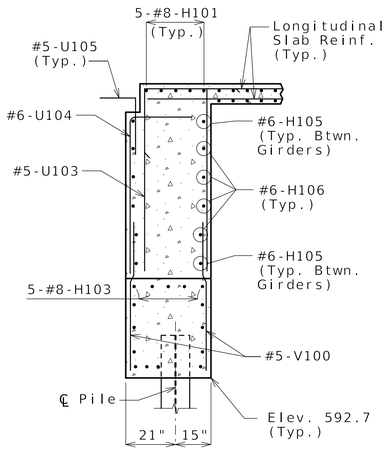

SECTION C-C

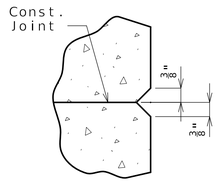

DETAIL A

Notes:

Work this sheet with Sheets No. 4 & 5.

For reinforcement of the barrier, see Sheet No. 34.

DETAILS FOR END BENT NO. 1

Designed SR JUL 2026
Detailed CAB JUL 2026
Checked MAC JUL 2026

Note: This drawing is not to scale. Follow dimensions.

B_JST0017_A9820_06_End Bent 1.dgn 8:11:47 PM Eastern 2-SEP-2026

STATE OF MISSOURI
MARTIN ALAN THORIEN
NUMBER PE-2013006488
PROFESSIONAL ENGINEER
4-2-26

DATE PREPARED: 2-SEP-2026
ROUTE: I-70 | STATE: MO
DISTRICT: BR | SHEET NO.: BR05-06
COUNTY: BOONE
JOB NUMBER: JST0017
CONTRACT ID.: 251203-D01
PROJECT NO.: IS 70-2(128)
BRIDGE NO.: A9820

REV	DATE	DESCRIPTION
0	090426	RFC BRIDGE A9820

IF A SEAL IS PRESENT ON THIS SHEET IT HAS BEEN ELECTRONICALLY SEALED AND DATED.

MISSOURI HIGHWAYS AND TRANSPORTATION COMMISSION
105 WEST CAPITOL
JEFFERSON CITY, MO 65102
1-888-ASK-MODOT (1-888-275-6636)

IMPROVE I-70 ROCHEPORT TO COLUMBIA

HORNER SHIFRIN
7161 PONDEROSA DRIVE, SUITE 100, HAZELWOOD, MISSOURI 63042
401 S. 18th St., Ste. 400, St. Louis, MO 63103
314-531-4321 FAX: 314-531-0866
www.HornerShifrin.com

EMERY SAPP & SONS, INC
1117 BOONVILLE AVENUE, SPRINGFIELD, MISSOURI 65802

MO STATE CERTIFICATE OF AUTHORITY #000159 ENGINEERING

REV. RevDesc

09/08/2026
Released for Construction

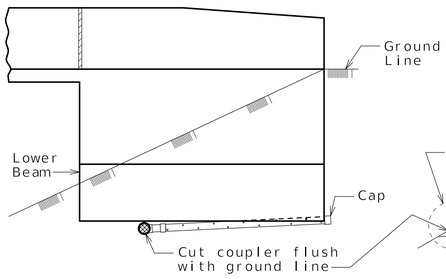

ELEVATION OF WING

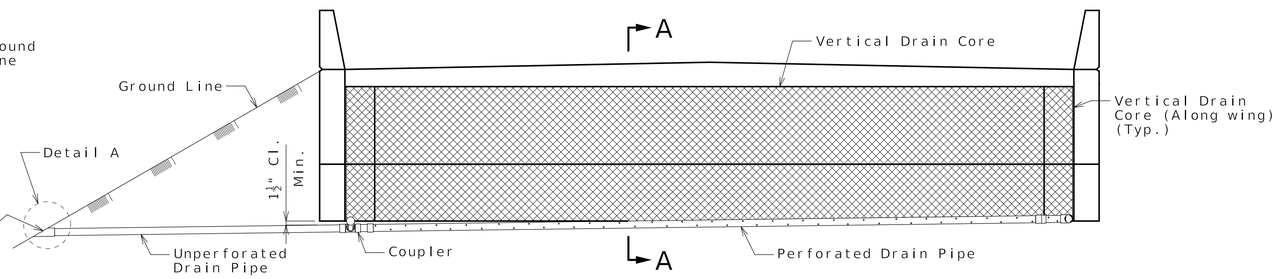

ELEVATION OF END BENT

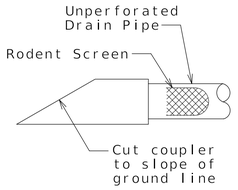

DETAIL A

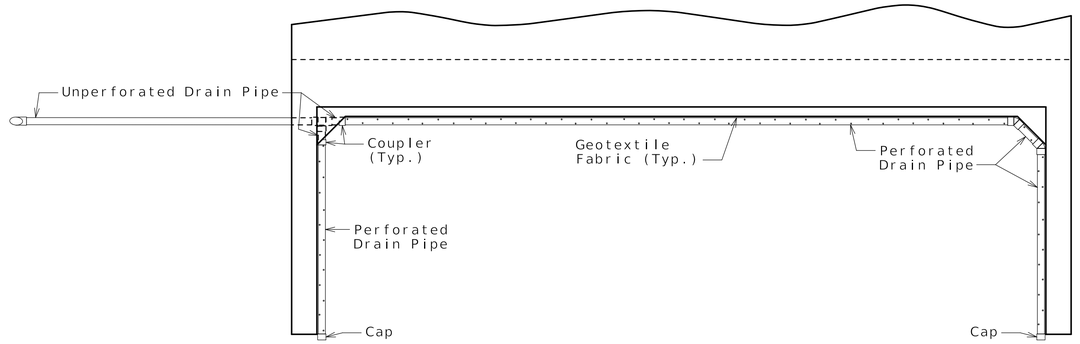

PLAN OF END BENT

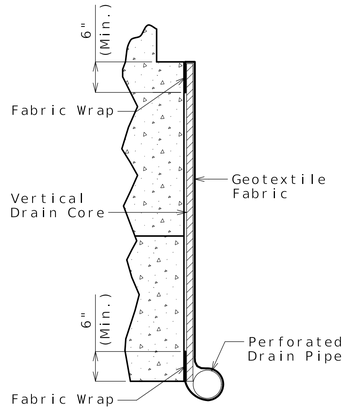

PART SECTION A-A
(Section thru wing similar)

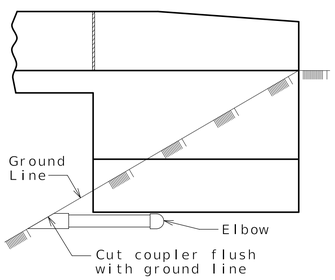

ELEVATION OF WING

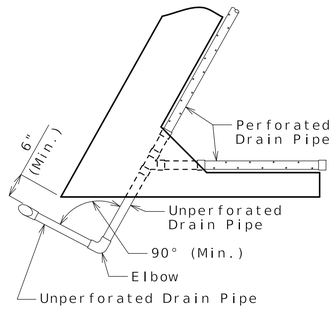

PART PLAN

OPTIONAL TURNED DRAIN
(Use only when straight drain is not practical.)

General Notes:

All drain pipe shall be sloped 1 to 2 percent.

Drain pipe may be either 6-inch diameter corrugated metallic-coated steel pipe underdrain, 4-inch diameter corrugated polyvinyl chloride (PVC) drain pipe, or 4-inch diameter corrugated polyethylene (PE) drain pipe.

Drain pipe shall be placed at fill face of end bent and inside face of wings. The pipe shall slope to lowest grade of ground line, also missing the lower beam of end bent by a minimum of 1 1/2 inches.

Perforated pipe shall be placed at fill face side and inside face of wings at the bottom of end bent and plain pipe shall be used where the vertical drain ends to the exit at ground line.

VERTICAL DRAINS AT END BENTS

STATE OF MISSOURI
MARTIN ALAN THORNBURG
NUMBER PE-2013006488
PROFESSIONAL ENGINEER
4-21

DATE PREPARED
2-SEP-2026

ROUTE	STATE
I-70	MO
DISTRICT	SHEET NO.
BR	BR05-07

COUNTY
BOONE

JOB NUMBER
JST0017

CONTRACT ID.
251203-D01

PROJECT NO.
IS 70-2(128)

BRIDGE NO.
A9820

REV	DATE	DESCRIPTION
0	090426	RFC BRIDGE A9820

IF A SEAL IS PRESENT ON THIS SHEET IT HAS BEEN ELECTRONICALLY SEALED AND DATED.

MISSOURI HIGHWAYS AND TRANSPORTATION COMMISSION

105 WEST CAPITOL
JEFFERSON CITY, MO 65102
1-888-ASK-MODOT (1-888-275-6636)

IMPROVE I-70 ROCHEPORT TO COLUMBIA

HORNER SHIFRIN
THE POWER OF BEING UNDERSTOOD
401 S. 18th St., Ste. 400
St. Louis, MO 63103-2212
314-621-6266 FAX: 314-621-6866
www.HornerShifrin.com

EMERY SAPPS SONS, INC

MO STATE CERTIFICATE OF AUTHORITY #000159 ENGINEERING

REV. RevDesc

Designed MAC APR 2026
Detailed SLF APR 2026
Checked TPL JUL 2026

Note: This drawing is not to scale. Follow dimensions.

B_JST0017_A9820_07_Vertical Drains at End Bents.dgn 1:02:44 AM Eastern 2-SEP-2026

09/08/2026
Released for Construction

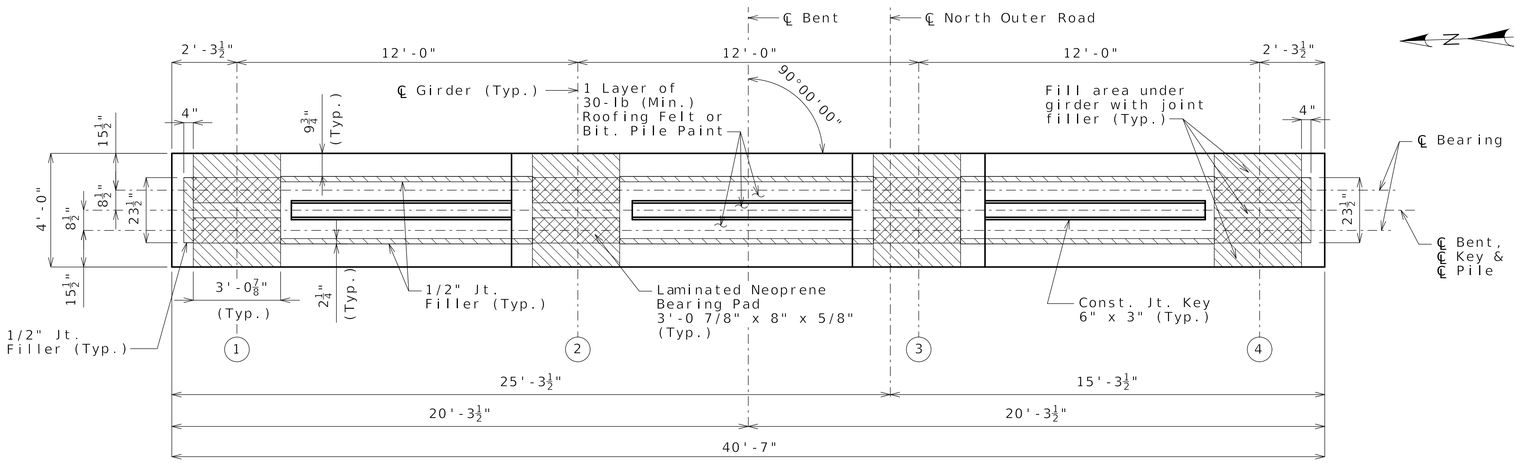

PLAN OF BEAM

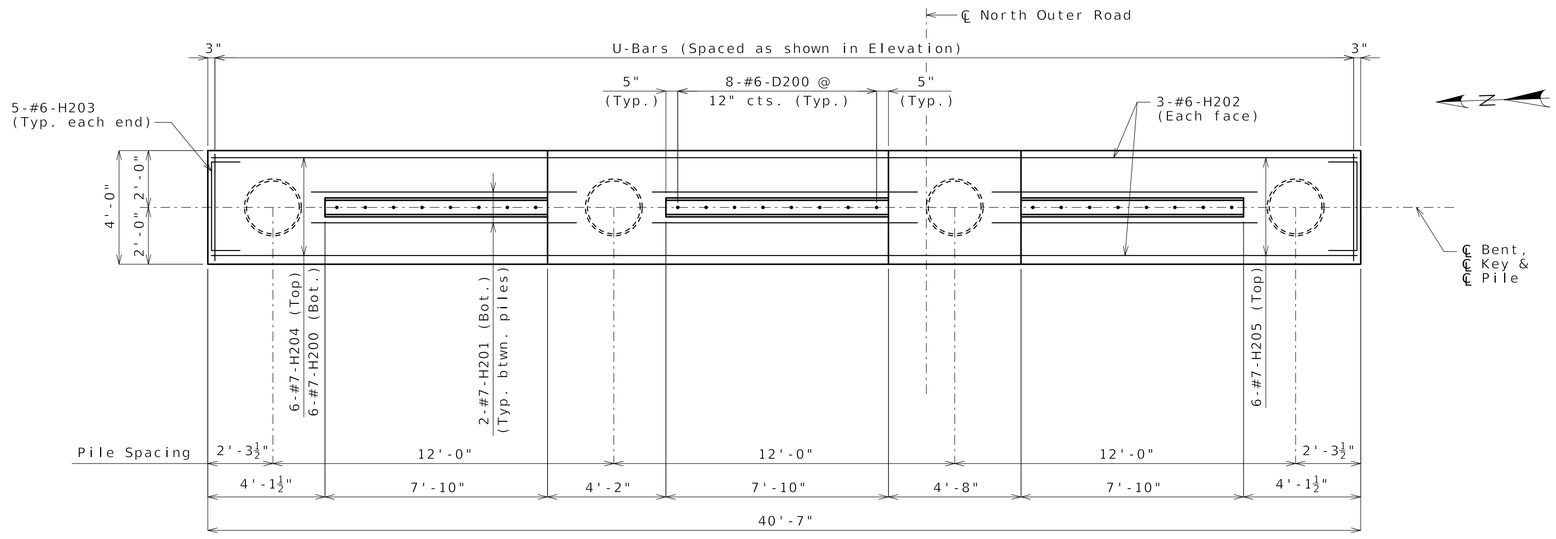

PART OF BEAM SHOWING REINFORCEMENT

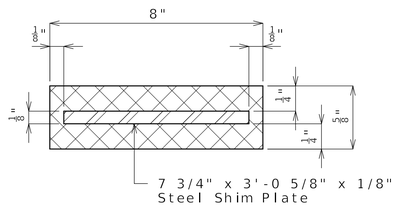

TYPICAL SECTION THRU
LAMINATED NEOPRENE BEARING PAD
AT INTERMEDIATE BENT NO. 2

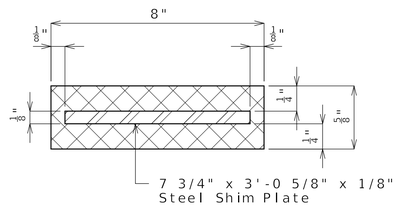

TYPICAL SECTION THRU
LAMINATED NEOPRENE BEARING PAD
AT INTERMEDIATE BENT NO. 3

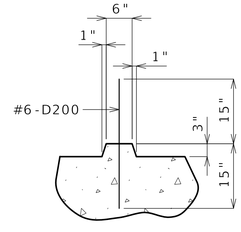

SECTION THRU KEY

Notes:

All U bars shall be placed parallel to centerline of roadway.

Work this sheet with Sheet No. 9.

For details of diaphragms at intermediate bent, see Sheet No. 24.

For steps 2" or more, use 2 1/4" x 1/2" joint filler up vertical face.

DETAILS FOR INTERMEDIATE BENTS NO. 2 & 3

Designed SR JUL 2026
Detailed SLF JUL 2026
Checked MAC JUL 2026

Note: This drawing is not to scale. Follow dimensions.

STATE OF MISSOURI
MARTIN ALAN CHORICH
NUMBER PE-2013006488
PROFESSIONAL ENGINEER
4-2-26

DATE PREPARED
2-SEP-2026

ROUTE	STATE
I-70	MO

DISTRICT	SHEET NO.
BR	BR05-08

COUNTY
BOONE

JOB NUMBER
JST0017

CONTRACT ID.
251203-D01

PROJECT NO.
IS 70-2(128)

BRIDGE NO.
A9820

REV	DATE	DESCRIPTION
0	090426	RFC BRIDGE A9820

IF A SEAL IS PRESENT ON THIS SHEET IT HAS BEEN ELECTRONICALLY SEALED AND DATED.

MISSOURI HIGHWAYS AND TRANSPORTATION COMMISSION
MoDOT
105 WEST CAPITOL
JEFFERSON CITY, MO 65102
1-888-ASK-MODOT (1-888-275-6636)

IMPROVE I-70 ROCHEPORT TO COLUMBIA

EMERY SAPPS SONS, INC

HORNER SHIFRIN
THE POWER OF BRIDGE ENGINEERING
401 S. 18th St., Ste. 400
St. Louis, MO 63103-2709
314-531-4321 FAX 314-531-6966
www.HornerShifrin.com

MO STATE CERTIFICATE OF AUTHORITY #000159 ENGINEERING

REV. RevDesc

B_JST0017_A9820_08_Int. Bents 2 & 3 Plans.dgn 1:03:41 AM Eastern 2-SEP-2026

09/08/2026
Released for Construction

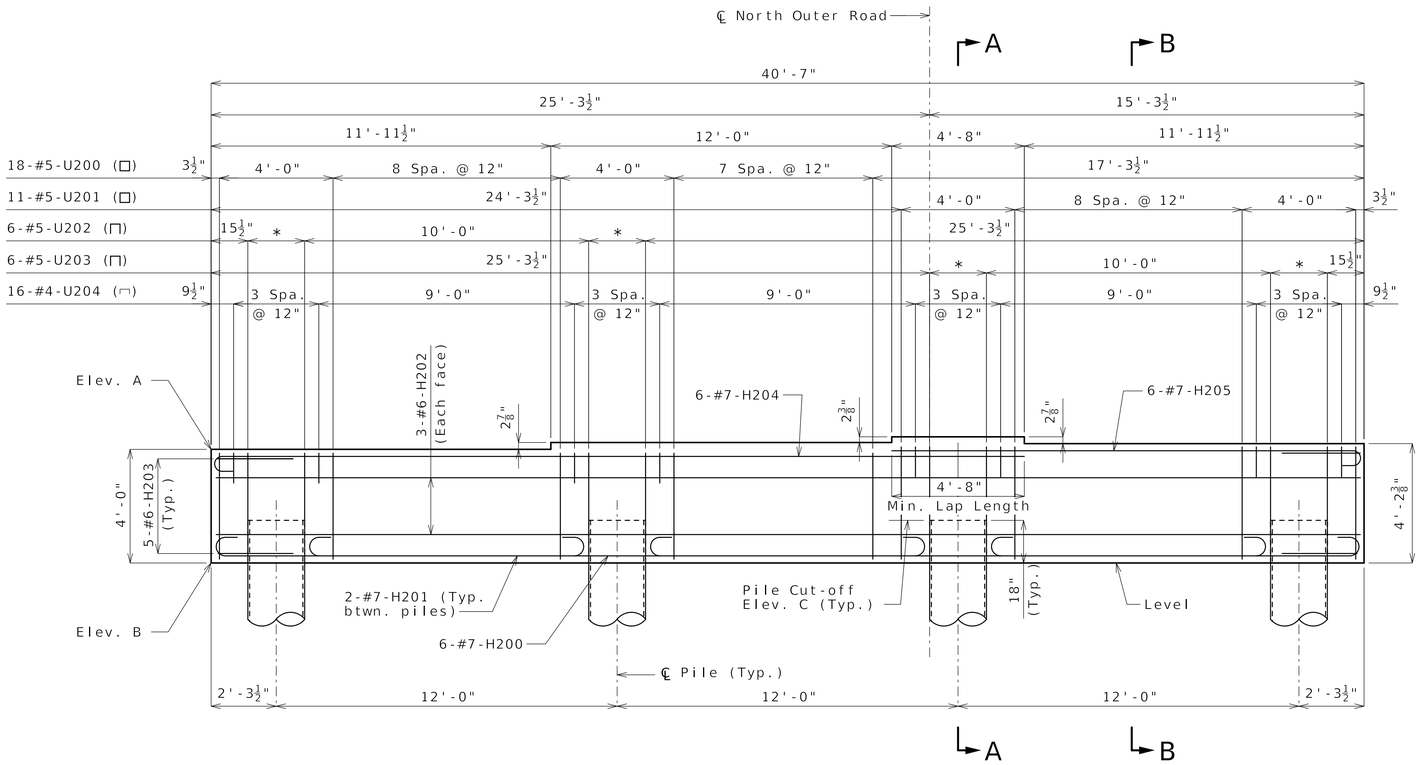

ELEVATION
(Looking ahead station)

Keys not shown for clarity.

∗ 2 Spa. @ 12"

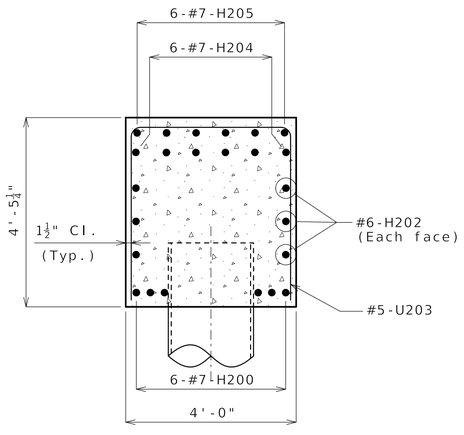

SECTION A-A

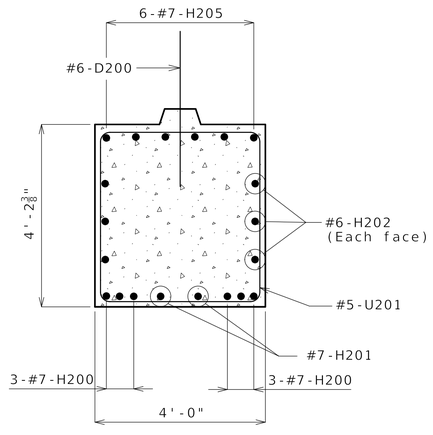

SECTION B-B

Table of Variables		
Variable	Bent 2	Bent 3
"A"	597.28	598.37
"B"	593.28	594.37
"C"	594.78	595.87

Notes:

Work this sheet with Sheet No. 8.

All U bars shall be placed parallel to centerline of roadway.

Reinforcing steel shall be shifted to clear piles. U bars shall clear piles by at least 1 1/2".

Bar marks for Intermediate Bent No. 2 shown (200 series), Intermediate Bent No. 3 similar (300 series).

DETAILS FOR INTERMEDIATE BENTS NO. 2 & 3

Designed SR JUL 2026
Detailed SLF JUL 2026
Checked MAC JUL 2026

Note: This drawing is not to scale. Follow dimensions.

STATE OF MISSOURI
MARTIN ALAN CHORICH
NUMBER PE-2013006488
PROFESSIONAL ENGINEER
4-2-26

DATE PREPARED
2-SEP-2026

ROUTE	STATE
I-70	MO
DISTRICT	SHEET NO.
BR	BR05-09

COUNTY
BOONE

JOB NUMBER
JST0017

CONTRACT ID.
251203-D01

PROJECT NO.
IS 70-2(128)

BRIDGE NO.
A9820

REV	DATE	DESCRIPTION
0	090426	RFC BRIDGE A9820

IF A SEAL IS PRESENT ON THIS SHEET IT HAS BEEN ELECTRONICALLY SEALED AND DATED.

MISSOURI HIGHWAYS AND TRANSPORTATION COMMISSION
105 WEST CAPITOL
JEFFERSON CITY, MO 65102
1-888-ASK-MODOT (1-888-275-6636)

IMPROVE I-70 ROCHEPORT TO COLUMBIA

EMERY SAPPS SONS, INC

HORNER SHIFRIN
THE POWER OF THOUGHTFUL DESIGN NOW
401 S. 18th St., Ste. 400
St. Louis, MO 63103
314-531-4321 FAX 314-531-6866
www.hornershifrin.com

MO STATE CERTIFICATE OF AUTHORITY #000159 ENGINEERING

REV. RevDesc

09/08/2026
Released for Construction

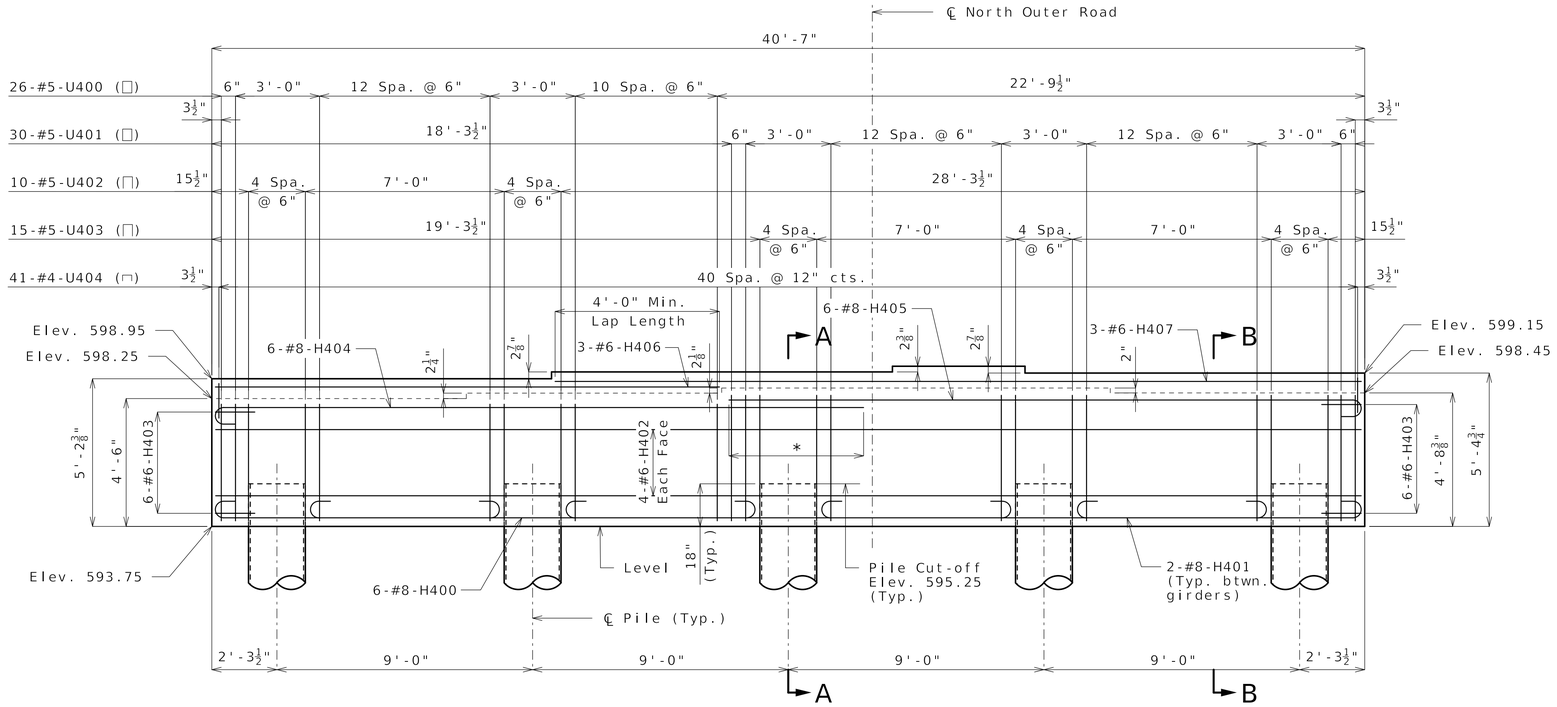

* 5'-5" Min. Lap Length

ELEVATION

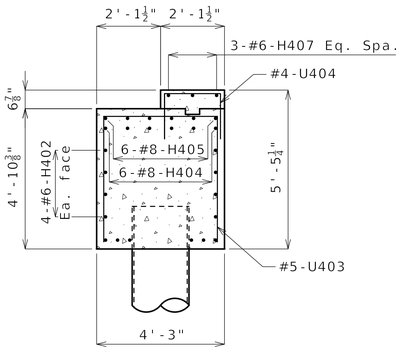

SECTION A-A

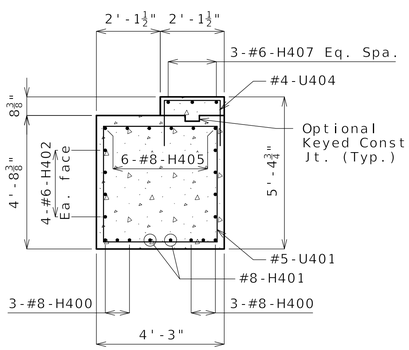

SECTION B-B

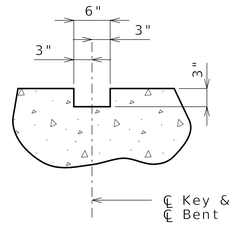

SECTION THRU KEY

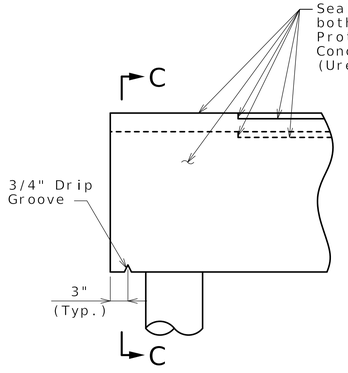

PART ELEVATION

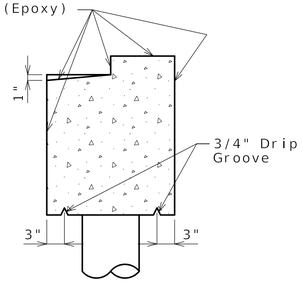

SECTION C-C

Notes:

Work this sheet with Sheet No. 11.

All U bars shall be placed parallel to centerline of roadway.

Reinforcing steel shall be shifted to clear piles. U bars shall clear piles by at least 1 1/2".

DETAILS FOR INTERMEDIATE BENT NO. 4

Designed SR JUL 2026
Detailed CAB JUL 2026
Checked MAC JUL 2026

Note: This drawing is not to scale. Follow dimensions.

B_JST0017_A9820_10_Int. Bent 4 Elevation.dgn 1:01:42 AM Eastern 2-SEP-2026

STATE OF MISSOURI
MARTIN ALAN THORIN
NUMBER PE-2013006488
PROFESSIONAL ENGINEER
4-2-26

DATE PREPARED
2-SEP-2026

ROUTE	STATE
I-70	MO
DISTRICT	SHEET NO.
BR	BR05-10

COUNTY
BOONE

JOB NUMBER
JST0017

CONTRACT ID.
251203-D01

PROJECT NO.
IS 70-2(128)

BRIDGE NO.
A9820

REV	DATE	DESCRIPTION
0	090426	RFC BRIDGE A9820

IF A SEAL IS PRESENT ON THIS SHEET IT HAS BEEN ELECTRONICALLY SEALED AND DATED.

MISSOURI HIGHWAYS AND TRANSPORTATION COMMISSION
105 WEST CAPITOL
JEFFERSON CITY, MO 65102
1-888-ASK-MODOT (1-888-275-6636)

IMPROVE I-70 ROCHEPORT TO COLUMBIA

EMERY SAPP & SONS, INC

HORNER SHIFRIN
The Power of Perspective
401 S. 18th St., Ste. 400
ST. LOUIS, MISSOURI 63103
314-531-1420 FAX: 314-531-0660
www.HornerShifrin.com

MO STATE CERTIFICATE OF AUTHORITY #000159 ENGINEERING

REV: RevDesc

09/08/2026
Released for Construction

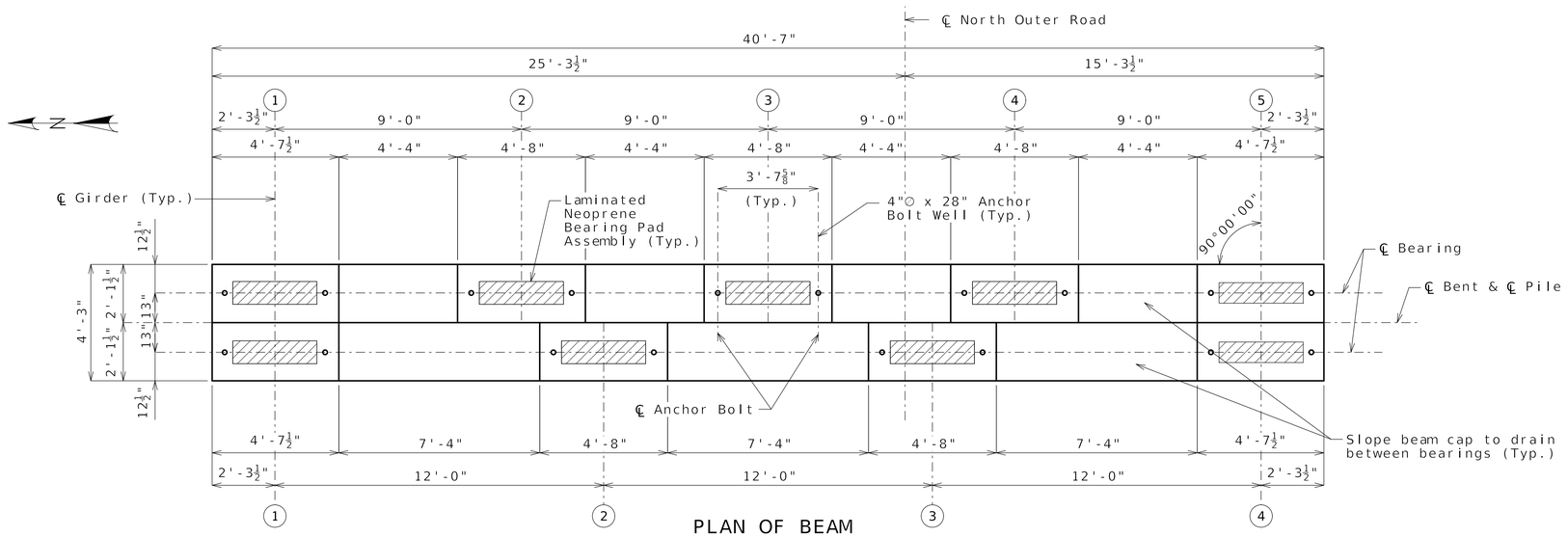

PLAN OF BEAM

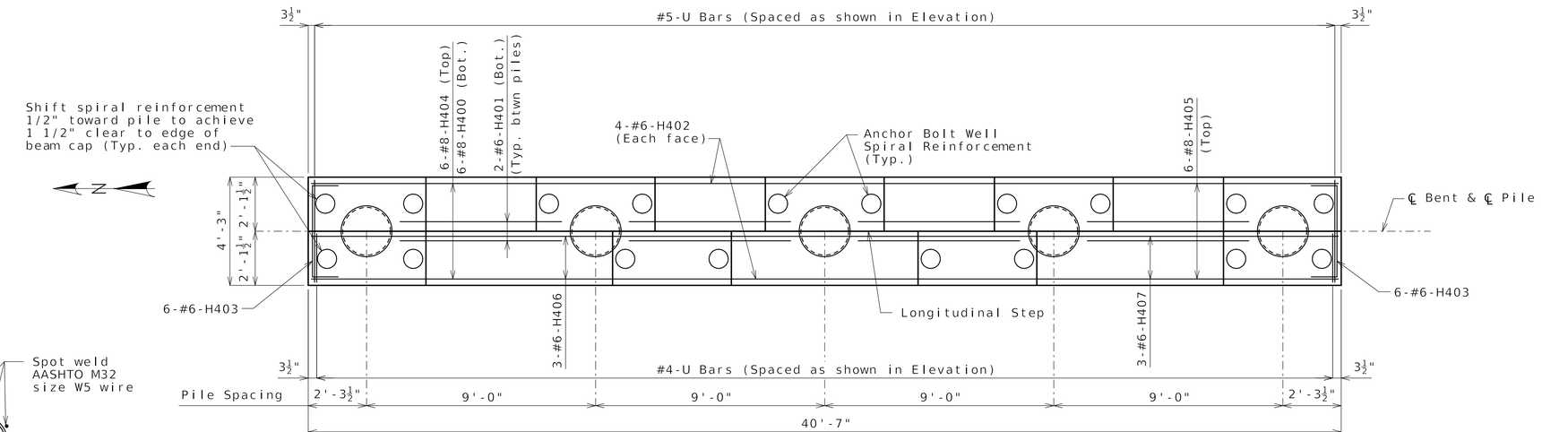

PLAN OF BEAM SHOWING REINFORCEMENT

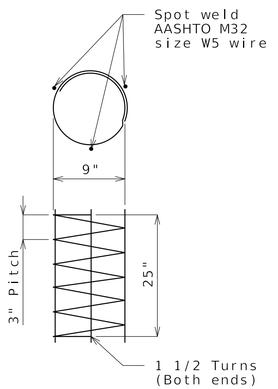

DETAIL OF SPIRAL REINFORCEMENT

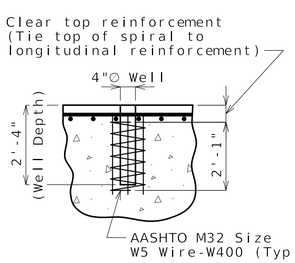

ANCHOR BOLT WELLS

Notes:

All U bars shall be placed parallel to centerline of roadway.

Work this sheet with Sheet No. 10.

For details of diaphragms at intermediate bent, see Sheet No. 25.

For details of bearings, see Sheet No. 17.

Holes for anchor bolts may be drilled into the substructure.

Anchor bolt wells shall not be formed with galvanized corrugated steel pipe.

DETAILS FOR INTERMEDIATE BENT NO. 4

Designed SR JUL 2026
Detailed CAB JUL 2026
Checked MAC JUL 2026

Note: This drawing is not to scale. Follow dimensions.

STATE OF MISSOURI
MARTIN ALAN CHORICH
NUMBER PE-2013006488
PROFESSIONAL ENGINEER
4-21

DATE PREPARED
2-SEP-2026

ROUTE	STATE
I-70	MO
DISTRICT	SHEET NO.
BR	BR05-11

COUNTY
BOONE

JOB NUMBER
JST0017

CONTRACT ID.
251203-D01

PROJECT NO.
IS 70-2(128)

BRIDGE NO.
A9820

REV	DATE	DESCRIPTION
0	090426	RFC BRIDGE A9820

IF A SEAL IS PRESENT ON THIS SHEET IT HAS BEEN ELECTRONICALLY SEALED AND DATED.

MISSOURI HIGHWAYS AND TRANSPORTATION COMMISSION
105 WEST CAPITOL
JEFFERSON CITY, MO 65102
1-888-ASK-MODOT (1-888-275-6636)

IMPROVE I-70 ROCHEPORT TO COLUMBIA

EMERY SAPP & SONS, INC

HORNER SHIFRIN
THE POWER OF INTEGRATED THINKING
401 S. 18th St., Ste. 100
St. Louis, MO 63103
314-531-4321 FAX: 314-531-5866
www.hornershifrin.com

MO STATE CERTIFICATE OF AUTHORITY #000159 ENGINEERING

REV. RevDesc

B_JST0017_A9820_11_Int. Bent 4 Plans.dgn 1:01:53 AM Eastern 2-SEP-2026

09/08/2026
Released for Construction

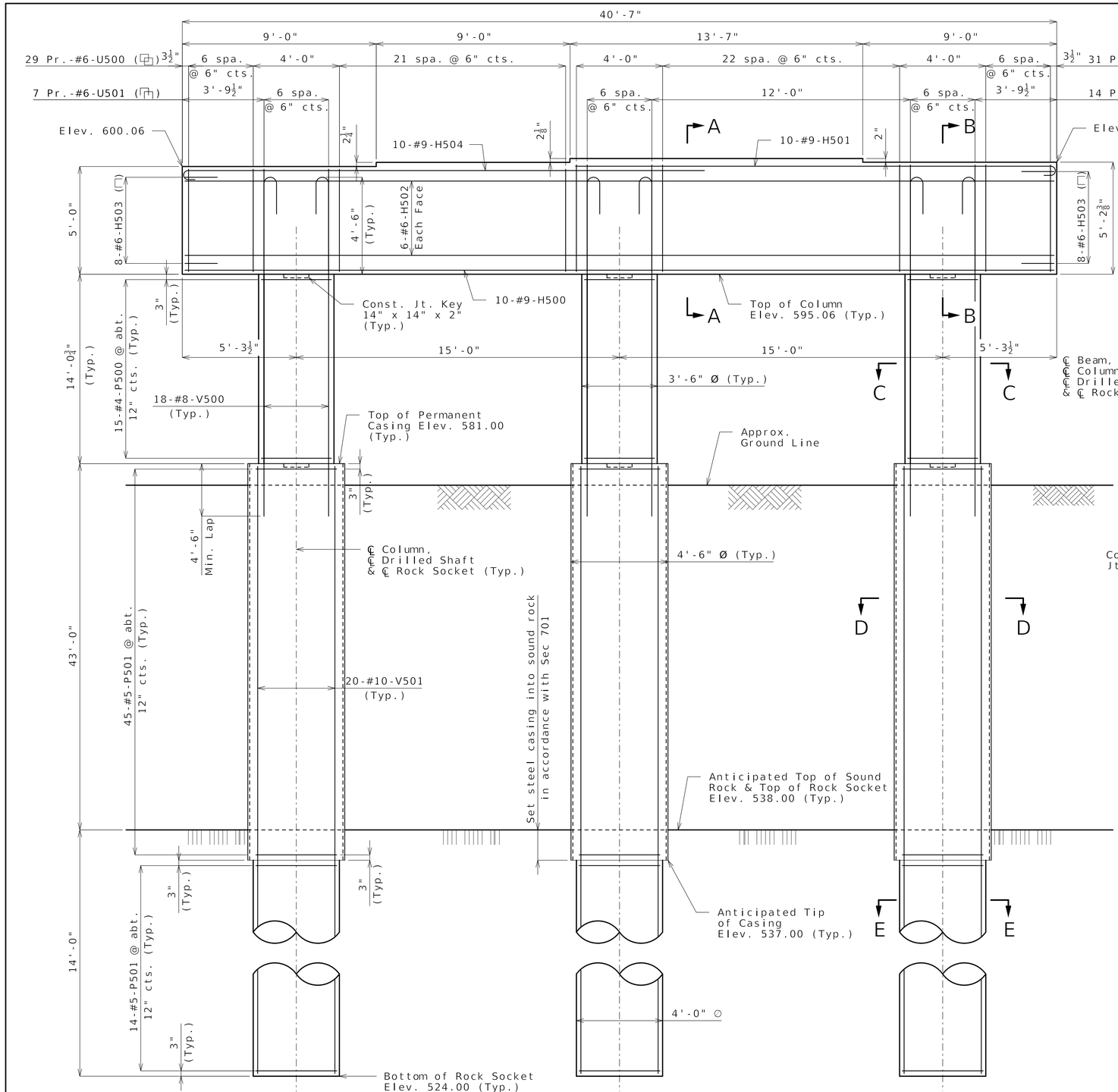

ELEVATION
(Beam keys not shown for clarity)

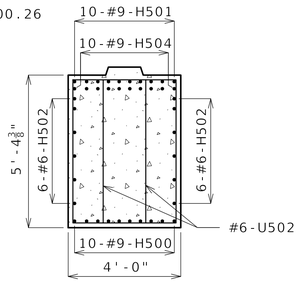

SECTION A-A

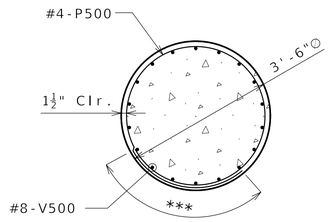

SECTION C-C

℄ Beam, ℄ Key, ℄ Column, ℄ Drilled Shaft & ℄ Rock Socket

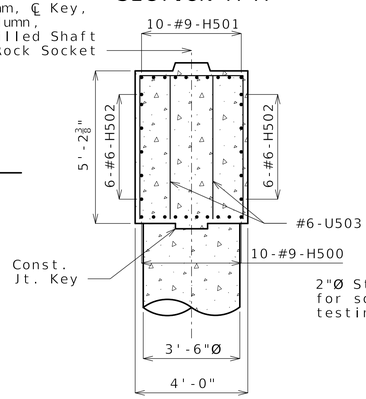

SECTION B-B

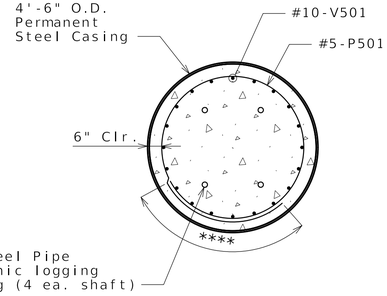

SECTION D-D

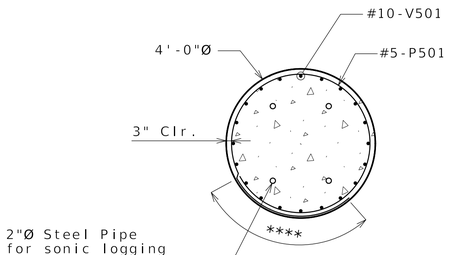

SECTION E-E

*** Minimum Lap = 2'-0"
(Stagger adjacent bar splices)
**** Minimum Lap = 2'-6"
(Stagger adjacent bar splices)

Notes:

For details of Intermediate Bent No. 5 not shown, see Sheet No. 13.

Sonic logging testing shall be performed on all drilled shafts and rock sockets.

An additional 3'-3" has been added to the V501 bar length and an additional (12) #4-P501 bars have been added to the quantities, if required, for possible change in top of rock elevation. The excess bar length shall be cut-off if not required.

Thickness of permanent steel casing shall be in accordance with Sec 701.

At the contractor's option, the hooks of vertical bars embedded in the beam cap may be oriented inward or outward.

DETAILS FOR INTERMEDIATE BENT NO. 5

Designed SR JUL 2026
Detailed SLF JUL 2026
Checked MAC AUG 2026

Note: This drawing is not to scale. Follow dimensions.

STATE OF MISSOURI
MARTIN ALAN THORNE
NUMBER PE-2013006488
PROFESSIONAL ENGINEER
4-2-26

DATE PREPARED
2-SEP-2026

ROUTE	STATE
I-70	MO
DISTRICT	SHEET NO.
BR	BR05-12

COUNTY
BOONE

JOB NUMBER
JST0017

CONTRACT ID.
251203-D01

PROJECT NO.
IS 70-2(128)

BRIDGE NO.
A9820

REV	DATE	DESCRIPTION
0	0904426	RFC BRIDGE A9820

IF A SEAL IS PRESENT ON THIS SHEET IT HAS BEEN ELECTRONICALLY SEALED AND DATED.

MISSOURI HIGHWAYS AND TRANSPORTATION COMMISSION
105 WEST CAPITOL
JEFFERSON CITY, MO 65102
1-888-ASK-MODOT (1-888-275-6636)

IMPROVE I-70 ROCHEPORT TO COLUMBIA

HORNER SHIFRIN
The Power of Experience
401 S. 18th St., Ste. 400
St. Louis, MO 63103-2709
314-531-1420 FAX: 314-531-0660
www.HornerShifrin.com

EMERY SAPP & SONS, INC
1117 Business Loop 70 West
Columbia, MO 65203-3553
573-445-6394 FAX: 573-445-3102
www.emerysapp.com

MO STATE CERTIFICATE OF AUTHORITY #000159 ENGINEERING

REV: RevDesc

09/08/2026
Released for Construction

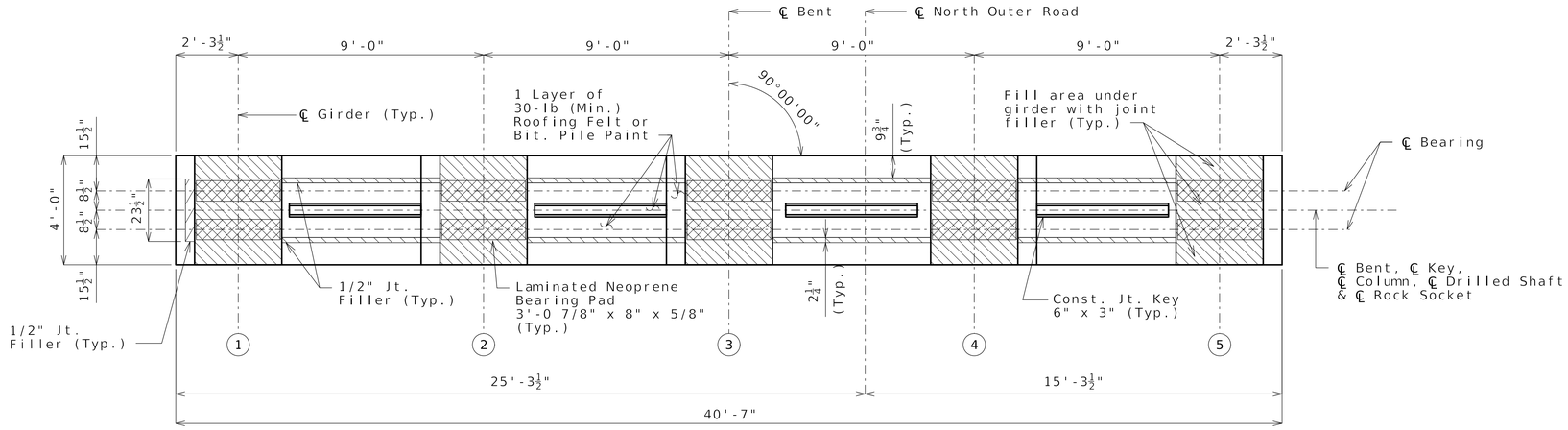

PLAN OF BEAM

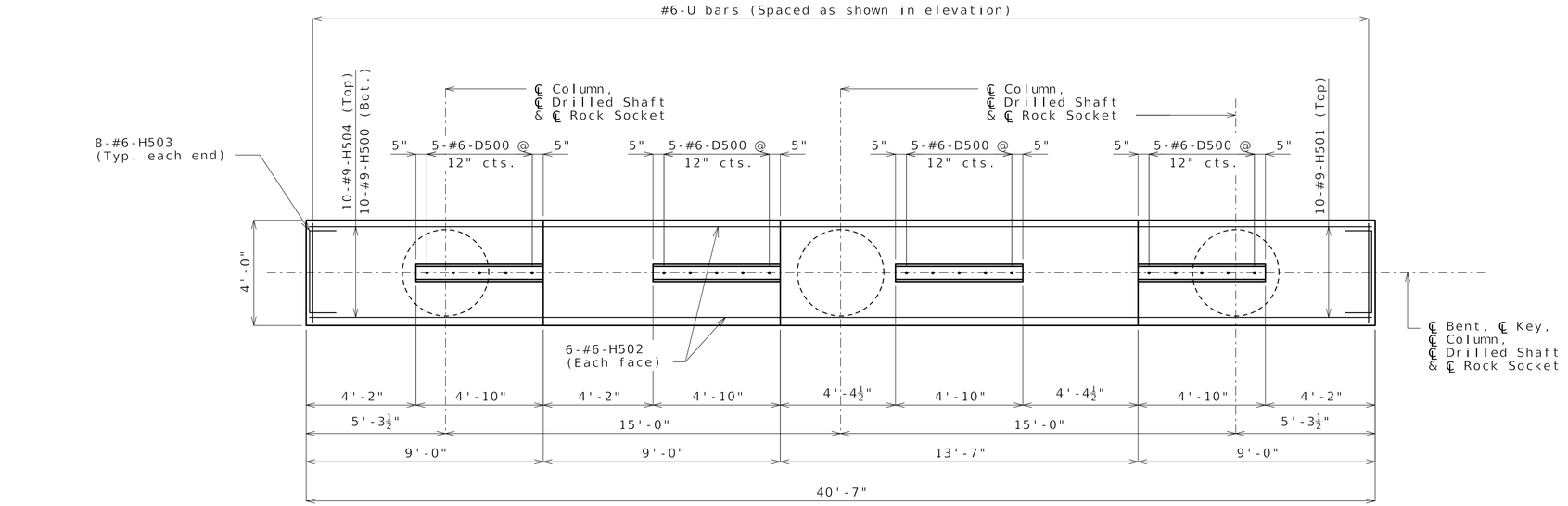

PART OF BEAM SHOWING REINFORCEMENT

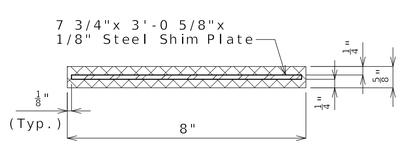

TYPICAL SECTION THRU LAMINATED NEOPRENE BEARING PAD

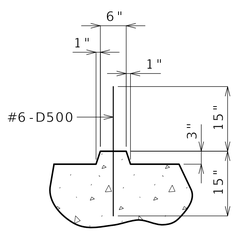

SECTION THRU KEY

Notes:

Work this sheet with Sheet No. 12.

For steps 2" or more, use 2 1/4" x 1/2" joint filler up vertical face.

For details of Diaphragm at Intermediate Bent No. 5, see Sheet No. 26.

DETAILS FOR INTERMEDIATE BENT NO. 5

Designed SR JUL 2026
Detailed SLF JUL 2026
Checked MAC AUG 2026

Note: This drawing is not to scale. Follow dimensions.

STATE OF MISSOURI
MARTIN ALAN CHORIA
NUMBER PE-2013006488
PROFESSIONAL ENGINEER
4-2-26

DATE PREPARED
2-SEP-2026

ROUTE	STATE
I-70	MO

DISTRICT	SHEET NO.
BR	BR05-13

COUNTY
BOONE

JOB NUMBER
JST0017

CONTRACT ID.
251203-D01

PROJECT NO.
IS 70-2(128)

BRIDGE NO.
A9820

REV	DATE	DESCRIPTION
0	090426	RFC BRIDGE A9820

IF A SEAL IS PRESENT ON THIS SHEET IT HAS BEEN ELECTRONICALLY SEALED AND DATED.

MISSOURI HIGHWAYS AND TRANSPORTATION COMMISSION
105 WEST CAPITOL
JEFFERSON CITY, MO 65102
1-888-ASK-MODOT (1-888-275-6636)

IMPROVE I-70 ROCHEPORT TO COLUMBIA

MO STATE CERTIFICATE OF AUTHORITY #000159 ENGINEERING

EMERY SAPP & SONS, INC

HORNER SHIFRIN
THE POWER OF INTEGRATION
401 S. 18th St., Ste. 400
St. Louis, MO 63103-2709
314-531-4321 FAX: 314-531-6866
www.hornershifrin.com

REV. RevDesc

B_JST0017_A9820_13_Int. Bent 5 Plans.dgn 1:01:56 AM Eastern 2-SEP-2026

09/08/2026
Released for Construction

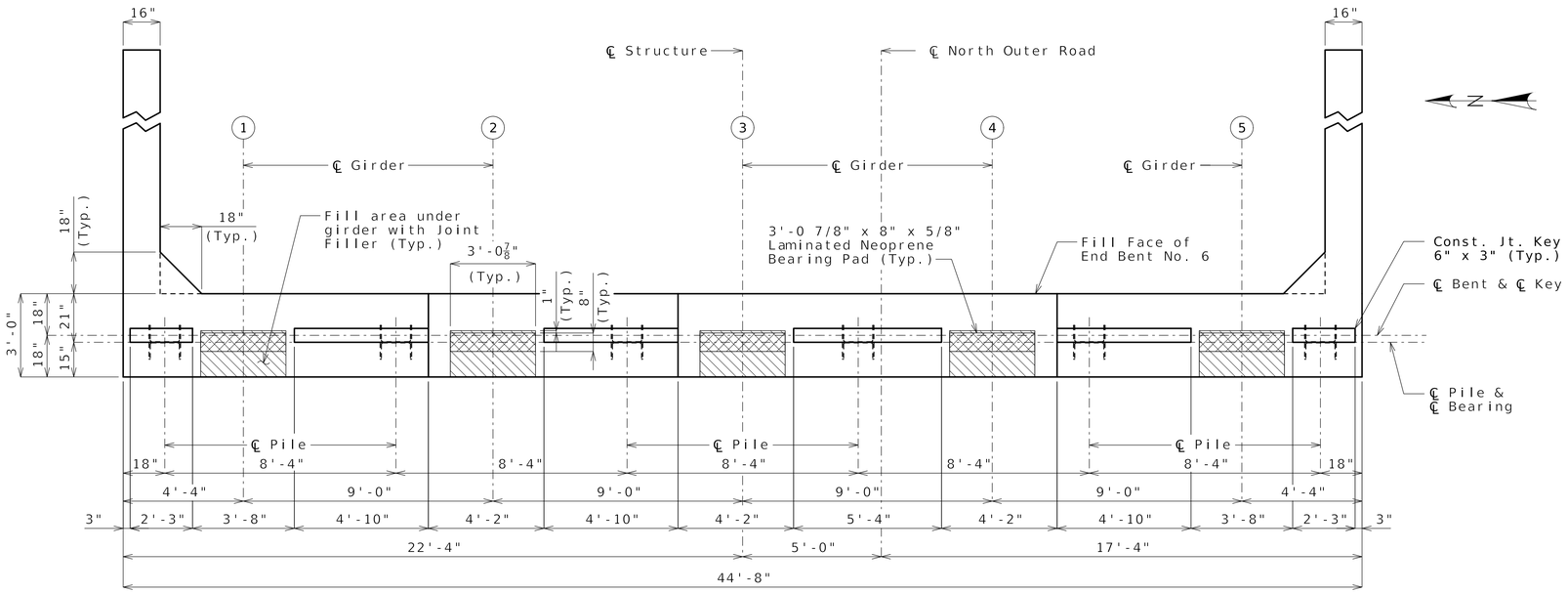

PLAN OF BEAM SHOWING DIMENSIONS

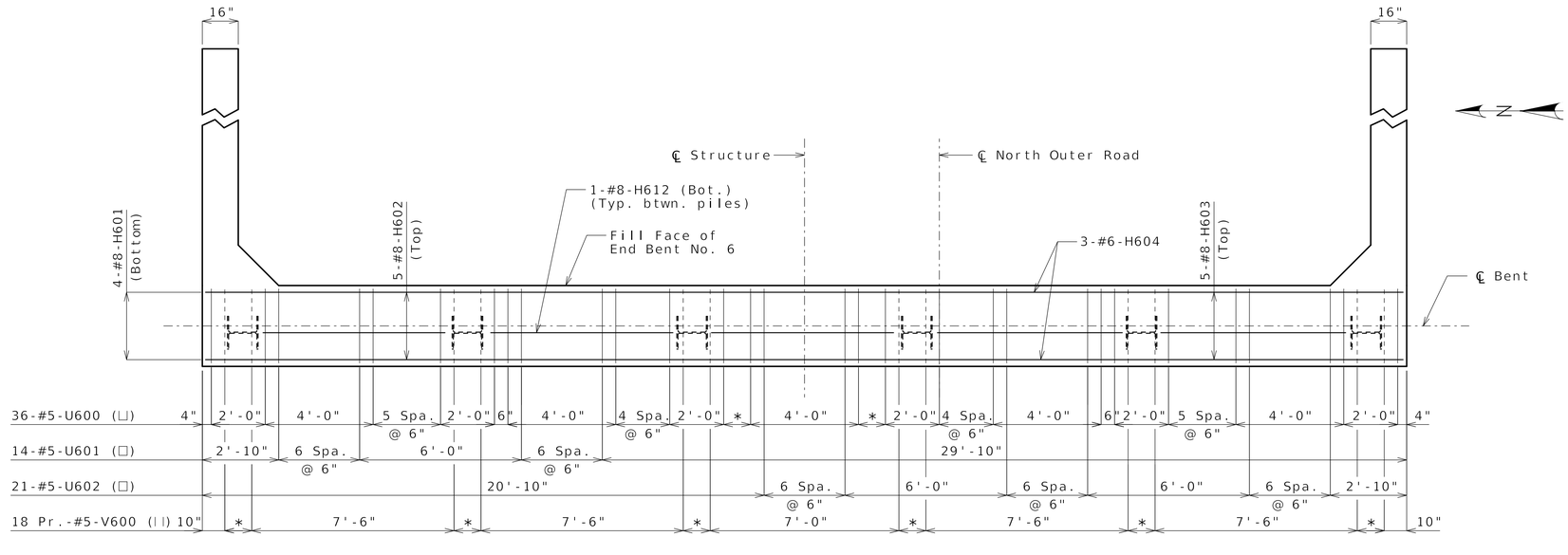

PLAN OF BEAM SHOWING REINFORCEMENT

* 2 Spa. @ 6"
(Beam steps and keys not shown for clarity)

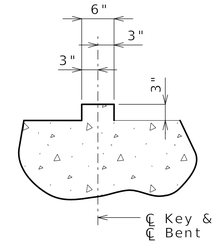

SECTION THRU KEY

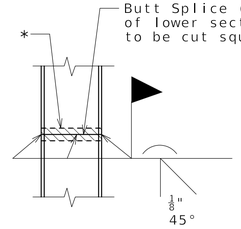

STEEL PILE SPLICE
(If required)

* Galvanizing material shall be omitted or removed one inch clear of weld locations in accordance with Sec 702.

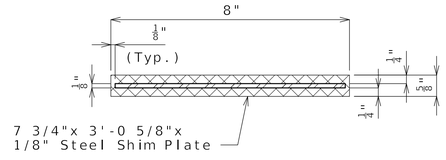

TYPICAL SECTION THRU
LAMINATED NEOPRENE BEARING PAD

Notes:

Work this sheet with Sheets No. 15 & 16.

For details of Vertical Drain at End Bents, see Sheet No. 7.

The U bars shall be placed parallel to centerline of roadway.

Reinforcing steel shall be shifted to clear piles. U bars shall clear piles by at least 1 1/2 inches.

DETAILS FOR END BENT NO. 6

Designed SR JUL 2026
Detailed CAB JUL 2026
Checked MAC JUL 2026

Note: This drawing is not to scale. Follow dimensions.

STATE OF MISSOURI
MARTIN ALAN THORNE
NUMBER PE-2013006488
PROFESSIONAL ENGINEER
9/4/26

DATE PREPARED
2-SEP-2026

ROUTE	STATE
I-70	MO
DISTRICT	SHEET NO.
BR	BR05-14

COUNTY
BOONE

JOB NUMBER
JST0017

CONTRACT ID.
251203-D01

PROJECT NO.
IS 70-2(128)

BRIDGE NO.
A9820

REV	DATE	DESCRIPTION
0	090426	RFC BRIDGE A9820

IF A SEAL IS PRESENT ON THIS SHEET IT HAS BEEN ELECTRONICALLY SEALED AND DATED.

MISSOURI HIGHWAYS AND TRANSPORTATION COMMISSION

MoDOT
105 WEST CAPITOL
JEFFERSON CITY, MO 65102
1-888-ASK-MODOT (1-888-275-6636)

IMPROVE I-70 ROCHEPORT TO COLUMBIA

EMERY SAPPS SONS, INC

HORNER SHIFRIN
THE PROFESSIONAL DESIGN TEAM
401 S. 18th St., Ste. 400
ST. LOUIS, MO 63103
314-531-1021 FAX: 314-531-0966
www.hornershifrin.com

MO STATE CERTIFICATE OF AUTHORITY #000159 ENGINEERING

REV: RevDesc

09/08/2026
Released for Construction

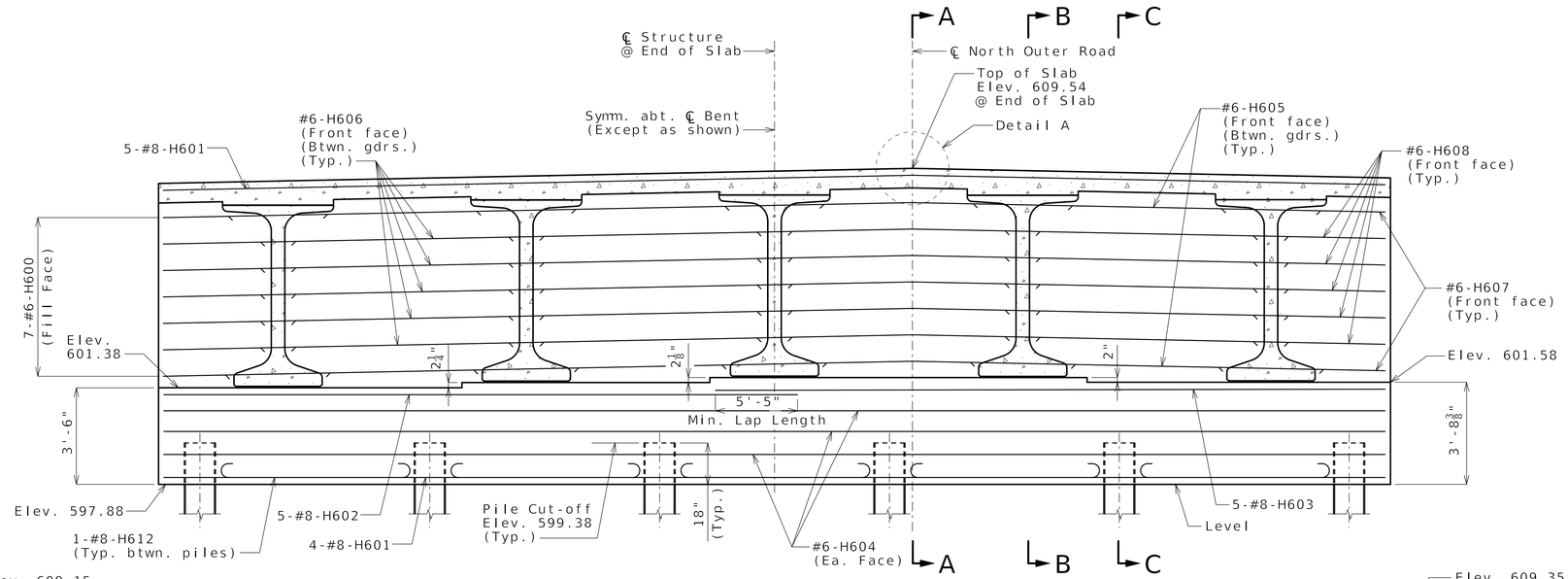

SECTION NEAR END BENT

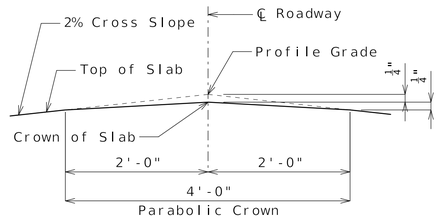

DETAIL A

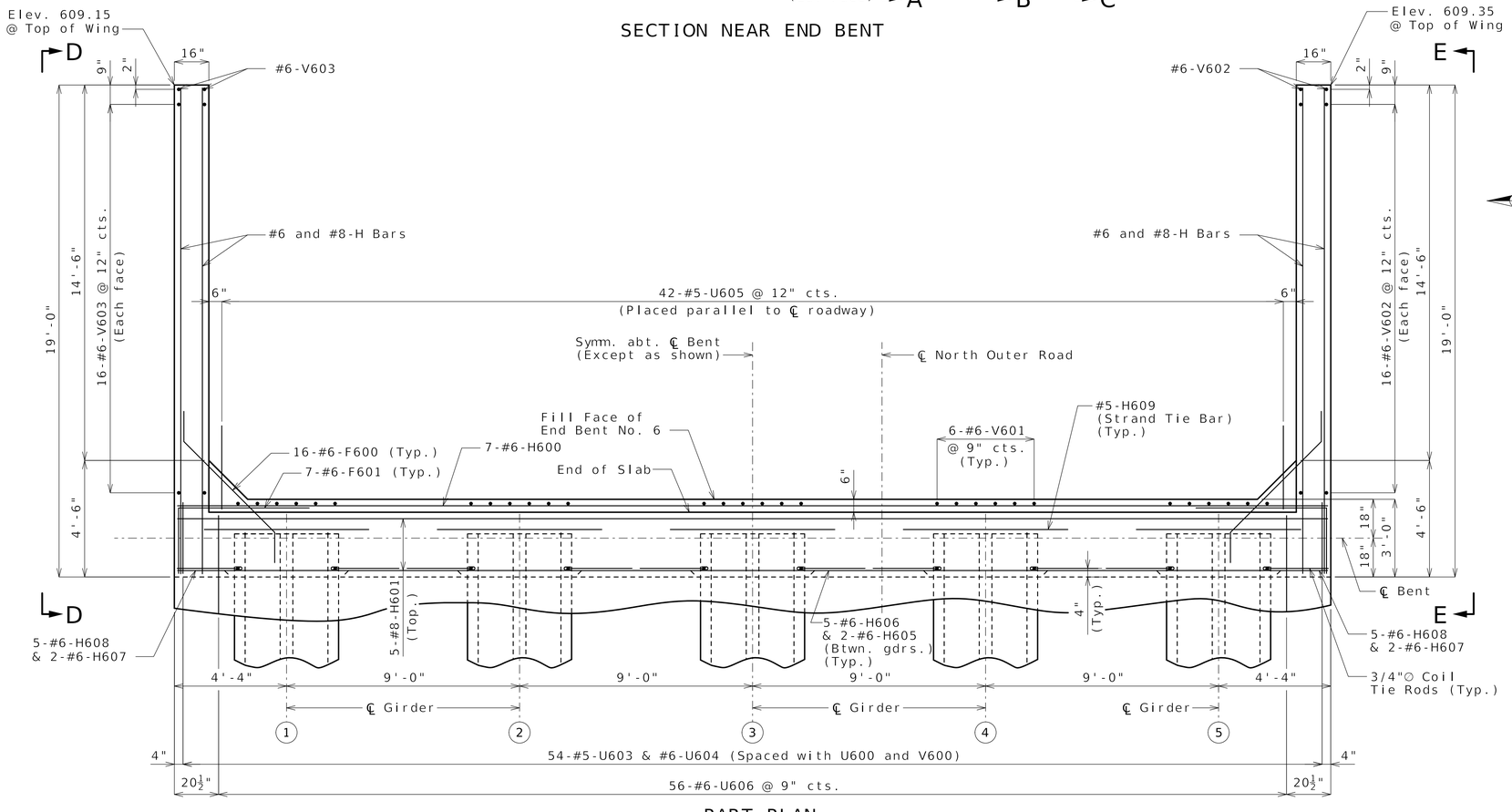

PART PLAN

Designed SR JUL 2026
Detailed CAB JUL 2026
Checked MAC JUL 2026

Note: This drawing is not to scale. Follow dimensions.

Sheet No. 15 of 48

Notes:

Work this sheet with Sheets No. 14 & 16.

For Sections A-A, B-B & C-C and Elevations D-D & E-E, see Sheet No. 16.

The #6-F600 bars shall be bent in field to clear girders.

The U bars shall be placed parallel to centerline of roadway.

All concrete in the end bent above top of beam and below top of slab shall be Class B-2.

Strands at end of girders shall be field bent or, if necessary, cut in field to maintain 1 1/2 inch minimum clearance to fill face of end bent.

For location of coil tie rods and #5-H609 (strand tie bar), see Sheet No. 21.

For details of vertical drain at end bents, see Sheet No. 7.

For details of bridge approach slab, see Sheet No. 35.

DETAILS FOR END BENT NO. 6

STATE OF MISSOURI
MARTIN ALAN THORIN
NUMBER PE-2013006488
PROFESSIONAL ENGINEER
4-2-26

DATE PREPARED
2-SEP-2026

ROUTE	STATE
I-70	MO

DISTRICT	SHEET NO.
BR	BR05-15

COUNTY
BOONE

JOB NUMBER
JST0017

CONTRACT ID.
251203-D01

PROJECT NO.
IS 70-2(128)

BRIDGE NO.
A9820

REV	DATE	DESCRIPTION
0	090426	RFC BRIDGE A9820

IF A SEAL IS PRESENT ON THIS SHEET IT HAS BEEN ELECTRONICALLY SEALED AND DATED.

MISSOURI HIGHWAYS AND TRANSPORTATION COMMISSION

105 WEST CAPITOL
JEFFERSON CITY, MO 65102
1-888-ASK-MODOT (1-888-275-6636)

IMPROVE I-70 ROCHEPORT TO COLUMBIA

HORNER SHIFRIN
THE POWER OF BEING UNDERSTOOD
401 S. 18th St., Ste. 400
St. Louis, MO 63103-2709
314-231-4321 FAX: 314-531-6866
www.HornerShifrin.com

EMERY SAPPS SONS, INC

MO STATE CERTIFICATE OF AUTHORITY #000159 ENGINEERING

REV. RevDesc

B_JST0017_A9820_15_End Bent No. 6 Elevation.dgn 1:04:13 AM Eastern 2-SEP-2026

09/08/2026
Released for Construction

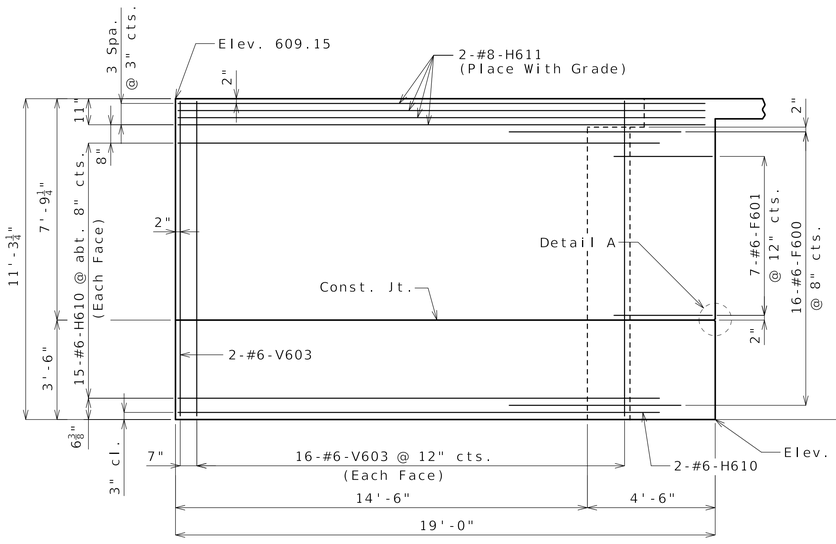

ELEVATION D-D

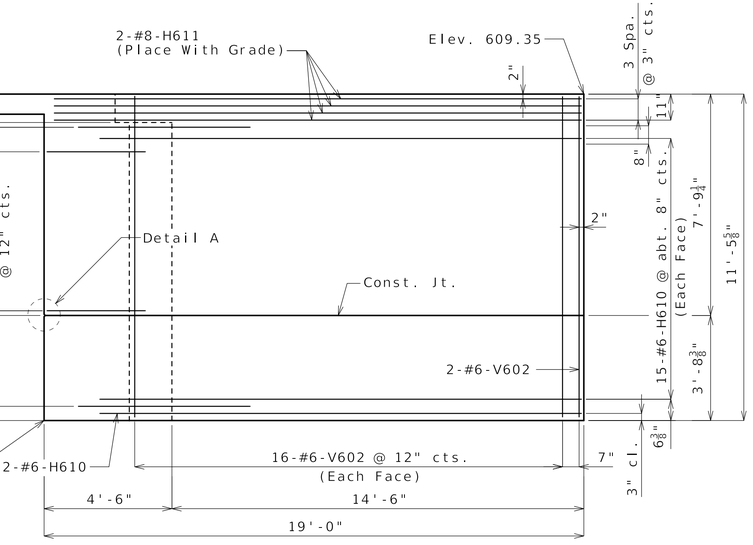

ELEVATION E-E

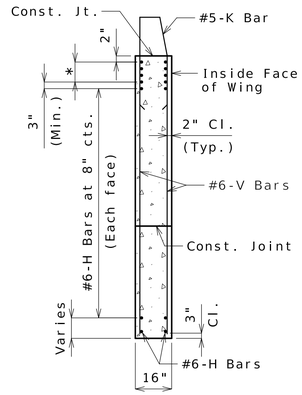

TYPICAL SECTION THRU WING

* #8-H Bars at 3" cts. (Each face)(Place with grade)

Dimensions at ℄ North Outer Road

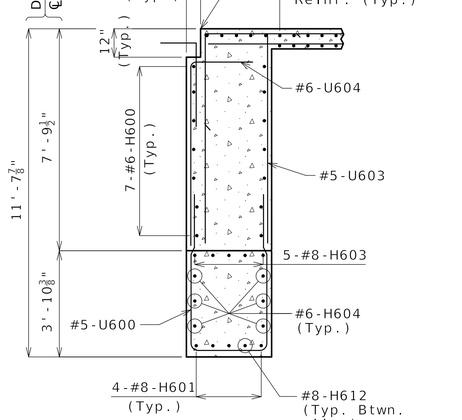

SECTION A-A

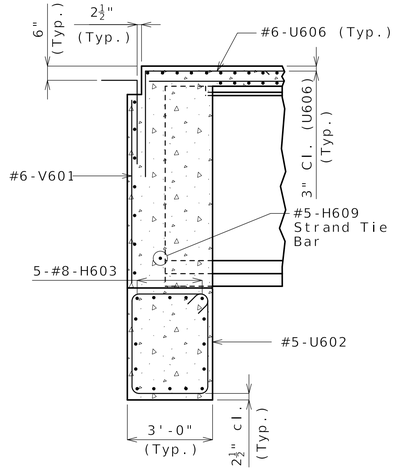

SECTION B-B

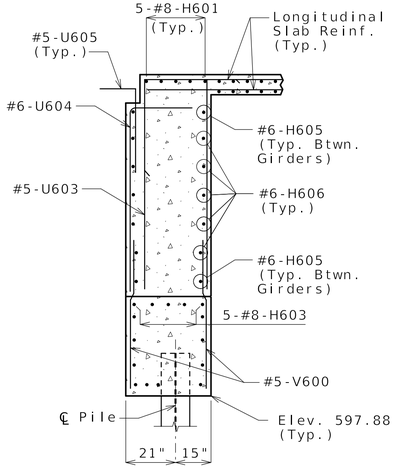

SECTION C-C

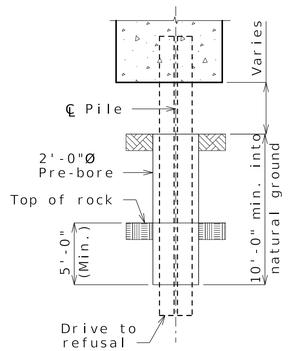

PRE-BORE DETAIL

Pile Installation Sequence:
1. Pre-bore to specified depth into rock.
2. Place and set pile per Sec. 702.
3. Backfill 5 feet with Class B-2 concrete and with sand above top of concrete.

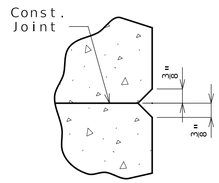

DETAIL A

Notes:

Work this sheet with Sheets No. 14 & 15.

For reinforcement of the barrier, see Sheet No. 34.

DETAILS FOR END BENT NO. 6

Designed SR JUL 2026
Detailed CAB JUL 2026
Checked MAC JUL 2026

Note: This drawing is not to scale. Follow dimensions.

STATE OF MISSOURI
MARTIN ALAN THORNBURG
NUMBER PE-2013006488
PROFESSIONAL ENGINEER
4-2-26

DATE PREPARED
2-SEP-2026

ROUTE	STATE
I-70	MO
DISTRICT	SHEET NO.
BR	BR05-16

COUNTY
BOONE

JOB NUMBER
JST0017

CONTRACT ID.
251203-D01

PROJECT NO.
IS 70-2(128)

BRIDGE NO.
A9820

REV	DATE	DESCRIPTION
0	090426	RFC BRIDGE A9820

IF A SEAL IS PRESENT ON THIS SHEET IT HAS BEEN ELECTRONICALLY SEALED AND DATED.

MISSOURI HIGHWAYS AND TRANSPORTATION COMMISSION
105 WEST CAPITOL
JEFFERSON CITY, MO 65102
1-888-ASK-MODOT (1-888-275-6636)

IMPROVE I-70 ROCHEPORT TO COLUMBIA

EMERY SAPP & SONS, INC

HORNER SHIFRIN
HORNER & SHIFRIN, INC.
THE PROFESSIONAL PARTNERSHIP FOR STRUCTURES
401 S. 18th St., Ste. 400
St. Louis, MO 63103
314-531-1420 FAX: 314-531-0966
www.hornershifrin.com

MO STATE CERTIFICATE OF AUTHORITY #000159 ENGINEERING

REV. RevDesc

09/08/2026
Released for Construction

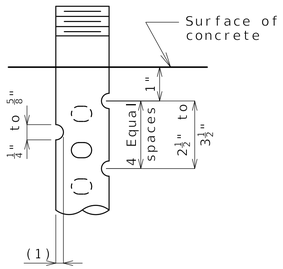

DETAIL FOR 3/4"Ø THRU 2 1/2"Ø ANCHOR BOLTS

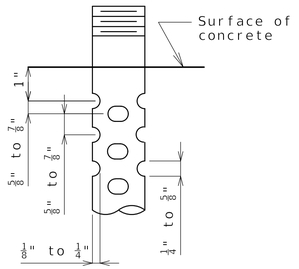

OPTIONAL DETAIL FOR 1 3/8"Ø THRU 2 1/2"Ø ANCHOR BOLTS

SWEDGE ANCHOR BOLT DETAILS

(1) $\frac{1}{8}$" for $\frac{3}{4}$"Ø thru $1\frac{1}{4}$"Ø anchor bolts

$\frac{1}{8}$" to $\frac{1}{4}$" for $1\frac{3}{8}$"Ø thru $2\frac{1}{2}$"Ø anchor bolts

Bearing Replacement Procedure:

1. Erect temporary shoring beneath girders and loosen anchor bolt nuts.
2. Jack girder of bearing to be replaced 1/8".
3. Jack adjacent girders 1/8".
4. Jack girder of bearing to be replaced an additional 1/8" (1/4" total).
5. Replace bearing and reduce jack to 1/8" to match adjacent girders.
6. Reseat adjacent girders and remove jacks.
7. Reseat girder of replaced bearing.
8. Re-tighten anchor bolt nuts to original location and remove shoring.

Bearing Replacement Notes:

Jacking shall not be performed under the concrete diaphragms. Temporary shoring must be erected beneath girders.

Required temporary support load of 215 kips at each bearing is a service load without a factor of safety. It includes the girder dead load, slab, barriers, and 35 psf FWS as well as 30 kips of live load. The live load corresponds to the loading expected under a single lane closure over the bearing being replaced.

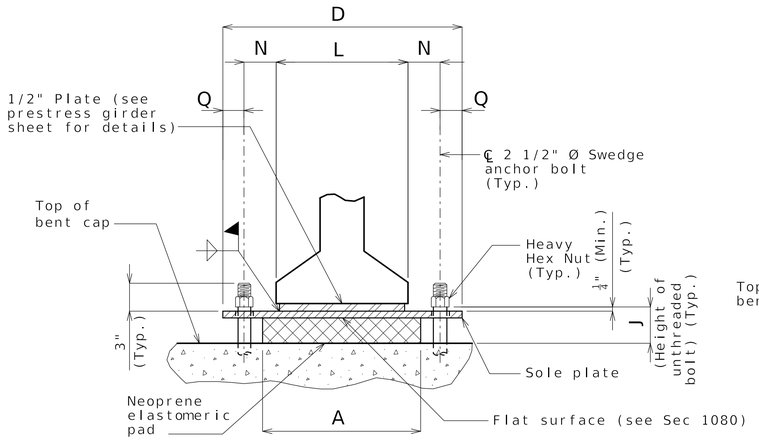

END VIEW

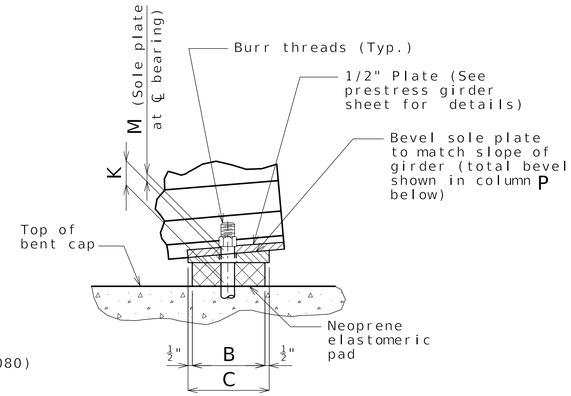

SIDE VIEW

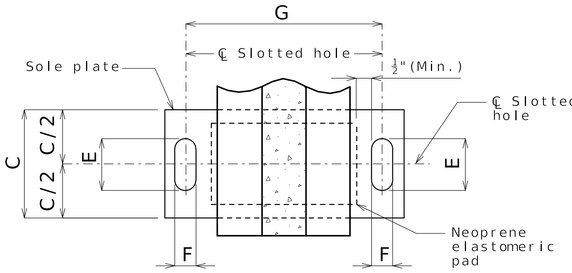

PART PLAN VIEW

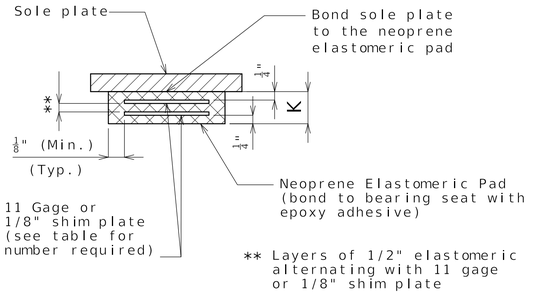

** Layers of 1/2" elastomeric alternating with 11 gage or 1/8" shim plate

NEOPRENE ELASTOMERIC PAD

EXPANSION BEARINGS

BENT NO.	A	B	C	D	E	F	G	J	K	L	M	N	P	Q	R	NUMBER OF SHIM PLATES *	NUMBER REQUIRED
4L	$36\frac{7}{8}$"	12"	13"	$51\frac{1}{8}$"	$7\frac{3}{4}$"	$2\frac{5}{8}$"	$43\frac{3}{8}$"	$6\frac{3}{4}$"	5"	$38\frac{3}{8}$"	$1\frac{1}{2}$"	$2\frac{5}{8}$"	0"	$3\frac{3}{4}$"	$0\frac{3}{16}$"	8	4
4R	$36\frac{7}{8}$"	12"	13"	$51\frac{1}{8}$"	$7\frac{1}{2}$"	$2\frac{5}{8}$"	$43\frac{3}{8}$"	$6\frac{3}{4}$"	5"	$38\frac{3}{8}$"	$1\frac{1}{2}$"	$2\frac{5}{8}$"	0"	$3\frac{3}{4}$"	$0\frac{3}{16}$"	8	5
																TOTAL BEARINGS	9

* The required shim plate shall be placed between layers of elastomeric and molded together to form an integral unit.

GENERAL NOTES:

Anchor bolts shall be 2 1/2" Ø ASTM F1554 Grade 55 swedged bolts and shall extend 2'-1" into the concrete with ASTM A563 Grade A Heavy Hex nuts. Actual manufacturer's certified mill test reports (chemical and mechanical) shall be provided. Swedging shall be 1" less than extension into the concrete.

Anchor bolt shall be at the centerline of slotted hole at 60°F. Bearing position shall be adjusted R for each 10° fall or rise in temperature at installation.

Anchor bolts and heavy hex nuts shall be coated with a minimum of two coats of inorganic zinc primer to provide a total dry film thickness of 4 mils minimum, 6 mils maximum, or galvanized in accordance with ASTM F2329.

Neoprene Elastomeric Pads shall be 60 Durometer.

Structural steel for sole plate shall be ASTM A709 Grade 36 and shall be coated with a minimum of two coats of inorganic zinc primer to provide a total dry film thickness of 4 mils mimimum, 6 mils maximum.

Laminated Neoprene Bearing Pad Assembly shall be in accordance with Sec 716.

LAMINATED NEOPRENE BEARING PAD ASSEMBLY

Designed SR JUL 2026
Detailed SLF APR 2026
Checked TPL JUL 2026

Note: This drawing is not to scale. Follow dimensions.

STATE OF MISSOURI
MARTIN ALAN THORNBURG
NUMBER PE-2013006488
PROFESSIONAL ENGINEER
4-2-26

DATE PREPARED 2-SEP-2026
ROUTE I-70 | STATE MO
DISTRICT BR | SHEET NO. BR05-17
COUNTY BOONE
JOB NUMBER JST0017
CONTRACT ID. 251203-D01
PROJECT NO. IS 70-2(128)
BRIDGE NO. A9820

REV	DATE	DESCRIPTION
0	090426	RFC BRIDGE A9820

IF A SEAL IS PRESENT ON THIS SHEET IT HAS BEEN ELECTRONICALLY SEALED AND DATED.

MISSOURI HIGHWAYS AND TRANSPORTATION COMMISSION
105 WEST CAPITOL
JEFFERSON CITY, MO 65102
1-888-ASK-MODOT (1-888-275-6636)

IMPROVE I-70 ROCHEPORT TO COLUMBIA

MO STATE CERTIFICATE OF AUTHORITY #000159 ENGINEERING

HORNER SHIFRIN
EMERY SAPP & SONS, INC

REV. RevDesc

09/08/2026
Released for Construction

(1) Fabricator shall apply a bond breaker to this region.

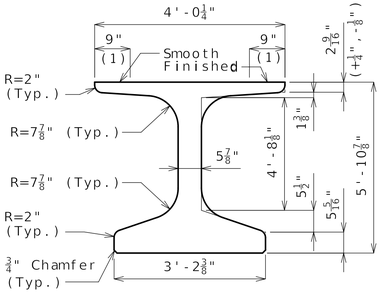

DIMENSIONS

(2) Outer strands tensioned to 2.02 kips/strand and inner strands to 8 kips/strand. Placed symmetrical about ℄ Girder. May be moved laterally in pairs.

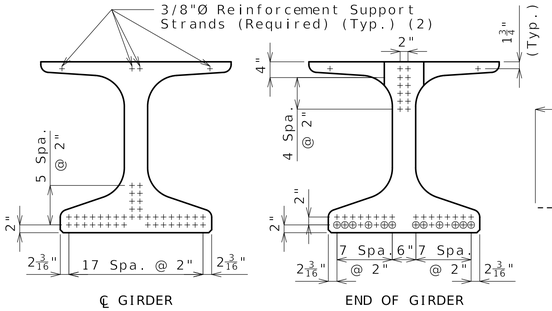

STRAND ARRANGEMENT

+ Indicates prestressing strand.

○ Indicates cut & shop bend with 3'-0" projection.

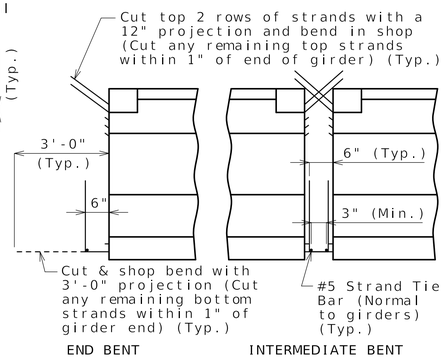

STRANDS AT GIRDER ENDS

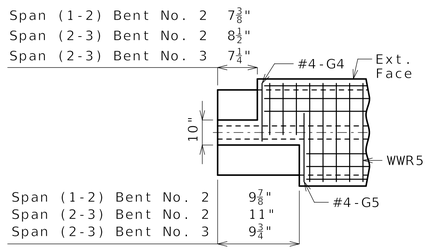

LEFT EXTERIOR GIRDER AT INTERMEDIATE BENT
Rotate 180° for right ext.

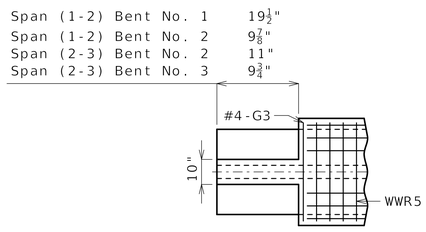

INTERIOR GIRDER AT ALL BENTS & EXTERIOR GIRDER AT END BENT

TOP FLANGE BLOCKOUT

Bill of Reinforcing Steel - Each Girder			
No.	Size/ Mark	Length	Shape
242	5 B1	7'-3"	11S
262	4 D1	4'-0"	9S
2	4 G3	3'-10¼"	20
2	4 G4	2'-3"	20
2	4 G5	2'-8⅛"	20

Bending Diagrams

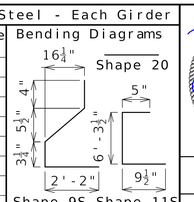

Welded Wire Reinforcement - Each Girder

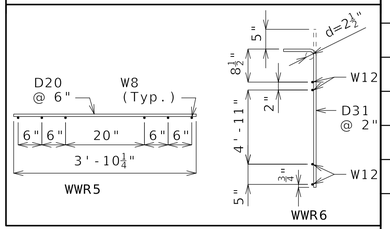

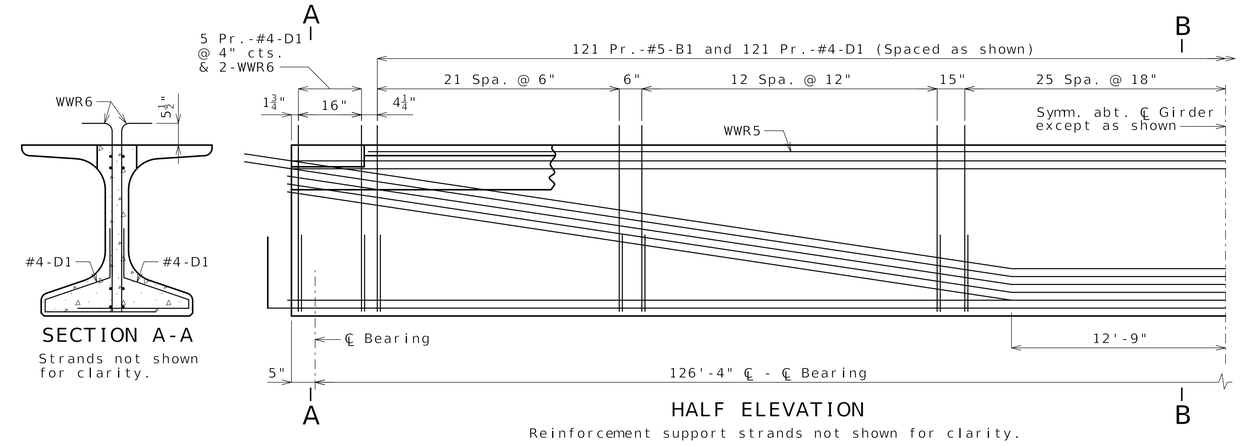

SECTION A-A
Strands not shown for clarity.

HALF ELEVATION
Reinforcement support strands not shown for clarity.

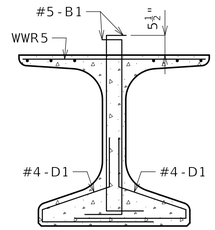

SECTION B-B
Strands not shown for clarity.

All dimensions are out to out.

Hooks and bends shall be in accordance with the CRSI Manual of Standard Practice for Detailing Reinforced Concrete Structures, Stirrup and Tie Dimensions.

Actual bar lengths are measured along centerline of bar to the nearest inch.

Minimum clearance to reinforcing shall be one inch.

All bar reinforcement shall be ASTM A615 or A706 Grade 60.

The two D1 bars may be furnished as one bar at the fabricator's option.

All B1 bars shall be epoxy coated.

G4 and G5 not required for interior girders. G3 not required for exterior girders of intermediate spans. Half no. of G3, G4 and G5 not required for ext. girders of end spans.

General Notes:

Concrete for prestressed girders shall be Class A-1 with f'c = 8000 psi and f'ci = 6500 psi.

Use 42 strands, 0.6"Ø Grade 270, with an initial prestress force of 1846 kips.

Pretensioned members shall be in accordance with Sec 1029.

Fabricator shall be responsible for location and design of lifting devices.

Exterior and interior girders are the same except: coil ties, top flange blockout, coil inserts for slab drains, holes for steel intermediate diaphragms.

For Girder Camber Diagram, see Sheet No. 27.

The 1 1/2"Ø holes shall be cast in the web for steel intermediate diaphragms. Drilling is not allowed. For location of holes and details of steel intermediate diaphragms, see Sheet No. 22.

For location of coil inserts at slab drains, see Sheet No. 28.

For location of coil ties at concrete diaphragms and integral bents, see Sheets No. 5 and 24.

NU-GIRDERS
SPANS (1-2) AND (2-3)

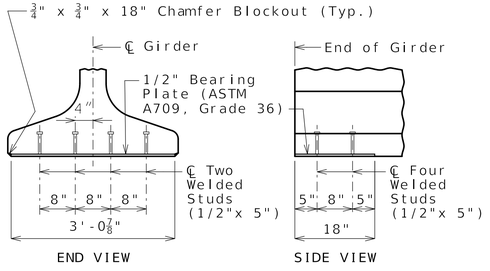

BEARING PLATE

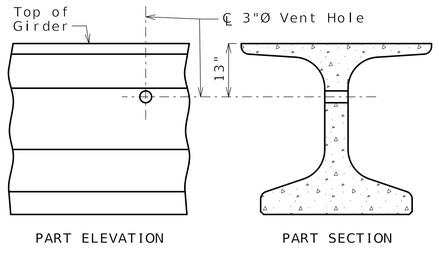

VENT HOLE

Place vent holes at or near upgrade 1/3 point of girders and clear reinforcing steel or strands by 1 1/2" minimum and steel intermediate diaphragm bolt connections by 6" minimum.

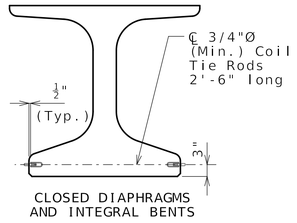

CLOSED DIAPHRAGMS AND INTEGRAL BENTS

COIL TIES

Exclude coil tie at exterior face of exterior girders except at integral end bents.

Designed SR JUN 2026
Detailed SLF APR 2026
Checked TPL JUL 2026

Note: This drawing is not to scale. Follow dimensions.

STATE OF MISSOURI
PROFESSIONAL ENGINEER
MARTIN ALAN THORNTON
NUMBER PE-2013006488
4/1/26

DATE PREPARED 2-SEP-2026
ROUTE I-70 | STATE MO
DISTRICT BR | SHEET NO. BR05-18
COUNTY BOONE
JOB NUMBER JST0017
CONTRACT ID. 251203-D01
PROJECT NO. IS 70-2(128)
BRIDGE NO. A9820

REV	DATE	DESCRIPTION
0	090426	RFC BRIDGE A9820

IF A SEAL IS PRESENT ON THIS SHEET IT HAS BEEN ELECTRONICALLY SEALED AND DATED.

MISSOURI HIGHWAYS AND TRANSPORTATION COMMISSION
105 WEST CAPITOL
JEFFERSON CITY, MO 65102
1-888-ASK-MODOT (1-888-275-6636)

IMPROVE I-70 ROCHEPORT TO COLUMBIA

MO STATE CERTIFICATE OF AUTHORITY #000159 ENGINEERING

HORNER SHIFRIN
THE WORLD IS OUR WORKPLACE
801 S. 18th St., Ste. 400
St. Louis, MO 63103-2306
314-531-1021 FAX: 314-531-0486
www.hornershifrin.com

EMERY SAPP& SONS, INC

REV. RevDesc

B_JST0017_A9820_18_Girder Span (1-2)(2-3).dgn 1:02:37 AM Eastern 2-SEP-2026

09/08/2026
Released for Construction

(1) Fabricator shall apply a bond breaker to this region.

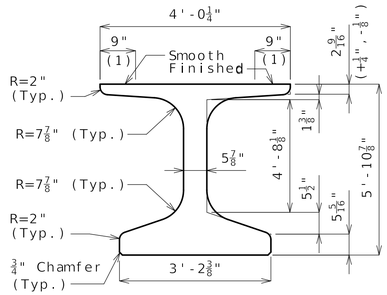

DIMENSIONS

(2) Outer strands tensioned to 2.02 kips/strand and inner strands to 8 kips/strand. Placed symmetrical about ℄ Girder. May be moved laterally in pairs.

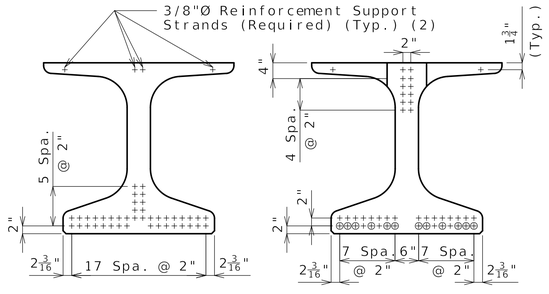

STRAND ARRANGEMENT

+ Indicates prestressing strand.

○ Indicates cut & shop bend with 3'-0" projection.

Cut top 2 rows of strands with a 12" projection and bend in shop (cut any remaining top strands within 1" of end of girder)

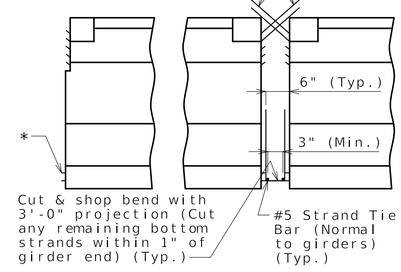

STRANDS AT GIRDER ENDS

* Prestressing strands at Int. Bent No. 4 shall be trimmed to 1 inch and shall be encased in concrete diaphragm.

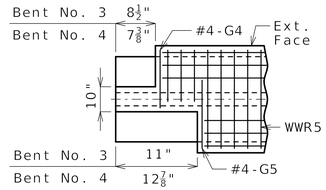

LEFT EXTERIOR GIRDER AT INTERMEDIATE BENT
Rotate 180° for right ext.

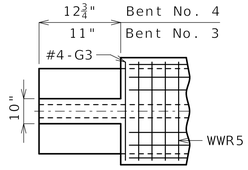

INTERIOR GIRDER AT ALL BENTS

TOP FLANGE BLOCKOUT

Bill of Reinforcing Steel - Each Girder				
No.	Size/ Mark	Length	Shape	Bending Diagrams
242	5 B1	7'-3"	11S	
262	4 D1	4'-0"	9S	
2	4 G3	3'-10¼"	20	
2	4 G4	2'-3"	20	
2	4 G5	2'-8⅛"	20	

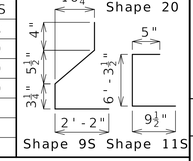

Welded Wire Reinforcement - Each Girder

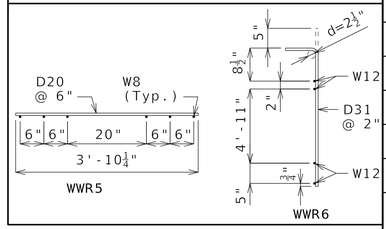

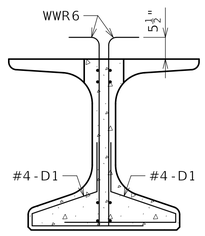

SECTION A-A

Strands not shown for clarity.

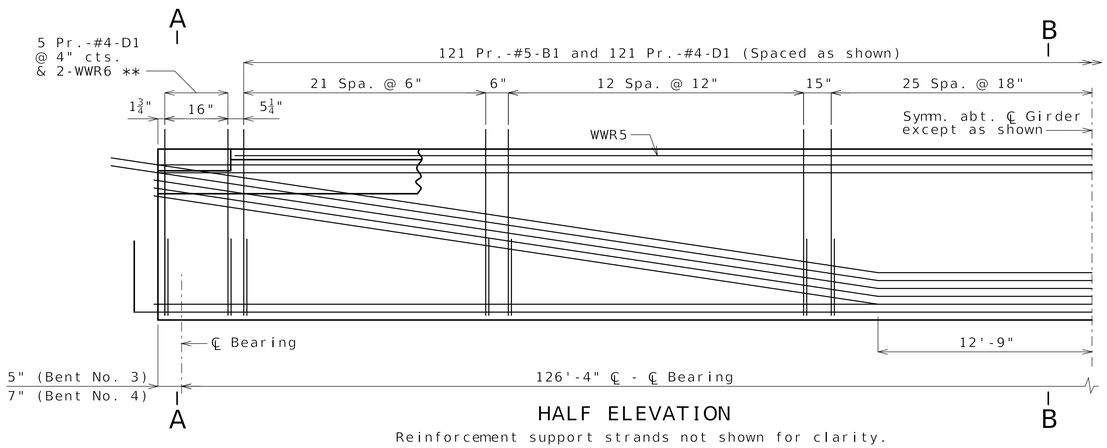

HALF ELEVATION

Reinforcement support strands not shown for clarity.

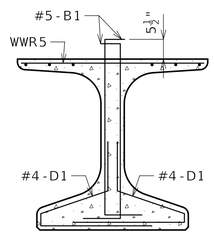

SECTION B-B

Strands not shown for clarity.

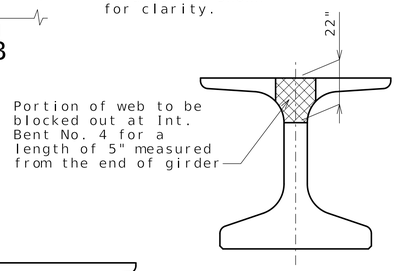

WEB BLOCKOUT DETAIL

Web blockout required for Girders in Span (3-4) at Int. Bent No. 4.

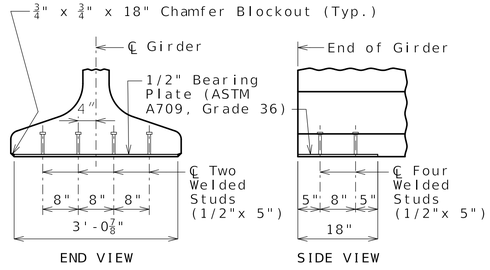

BEARING PLATE

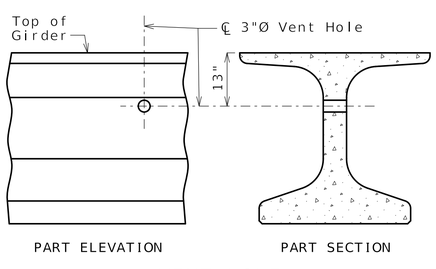

VENT HOLE

Place vent holes at or near upgrade 1/3 point of girders and clear reinforcing steel or strands by 1 1/2" minimum and steel intermediate diaphragm bolt connections by 6" minimum.

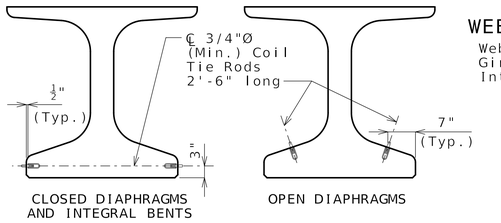

COIL TIES

Exclude coil tie at exterior face of exterior girders except at integral end bents.

All dimensions are out to out.

Hooks and bends shall be in accordance with the CRSI Manual of Standard Practice for Detailing Reinforced Concrete Structures, Stirrup and Tie Dimensions.

Actual bar lengths are measured along centerline of bar to the nearest inch.

Minimum clearance to reinforcing shall be one inch.

All bar reinforcement shall be ASTM A615 or A706 Grade 60.

The two D1 bars may be furnished as one bar at the fabricator's option.

All B1 bars shall be epoxy coated.

G4 and G5 not required for interior girders. G3 not required for exterior girders of intermediate spans. Half no. of G3, G4 and G5 not required for ext. girders of end spans.

** WWR6 shall terminate 1/2" from the top of girder at Int. Bent No. 4 and shall not be exposed.

General Notes:

Concrete for prestressed girders shall be Class A-1 with f'c = 8000 psi and f'ci = 6500 psi.

Use 42 strands, 0.6"Ø Grade 270, with an initial prestress force of 1846 kips.

Pretensioned members shall be in accordance with Sec 1029.

Fabricator shall be responsible for location and design of lifting devices.

Exterior and interior girders are the same except: coil ties, top flange blockout, coil inserts for slab drains, holes for steel intermediate diaphragms.

For Girder Camber Diagram, see Sheet No. 27.

The 1 1/2"Ø holes shall be cast in the web for steel intermediate diaphragms. Drilling is not allowed. For location of holes and details of steel intermediate diaphragms, see Sheet No. 22.

For location of coil inserts at slab drains, see Sheet No. 28.

For location of coil ties at concrete diaphragms and integral bents, see Sheets No. 24 and 25.

For location of slotted wells in end of girder at Int. Bent No. 4, see Sheet No. 29.

NU-GIRDERS SPAN (3-4)

Designed SR JUN 2026
Detailed SLF APR 2026
Checked TPL AUG 2026

Note: This drawing is not to scale. Follow dimensions.

STATE OF MISSOURI MARTIN ALAN THORNE NUMBER PE-2013006488 PROFESSIONAL ENGINEER

DATE PREPARED 2-SEP-2026
ROUTE I-70 | STATE MO
DISTRICT BR | SHEET NO. BR05-19
COUNTY BOONE
JOB NUMBER JST0017
CONTRACT ID. 251203-D01
PROJECT NO. IS 70-2(128)
BRIDGE NO. A9820

REV	DATE	DESCRIPTION
0	090426	RFC BRIDGE A9820

IF A SEAL IS PRESENT ON THIS SHEET IT HAS BEEN ELECTRONICALLY SEALED AND DATED.

MISSOURI HIGHWAYS AND TRANSPORTATION COMMISSION
105 WEST CAPITOL
JEFFERSON CITY, MO 65102
1-888-ASK-MODOT (1-888-275-6636)

IMPROVE I-70 ROCHEPORT TO COLUMBIA

HORNER SHIFRIN
THE HORNER SHIFRIN GROUP, INC.
ST. LOUIS, MISSOURI 63102
401 S. 18th St., Ste. 400
314-621-4321 FAX: 314-621-4866
www.hornershifrin.com

EMERY SAPPS & SONS, INC

MO STATE CERTIFICATE OF AUTHORITY #000159 ENGINEERING

REV. RevDesc

09/08/2026
Released for Construction

(1) Fabricator shall apply a bond breaker to this region.

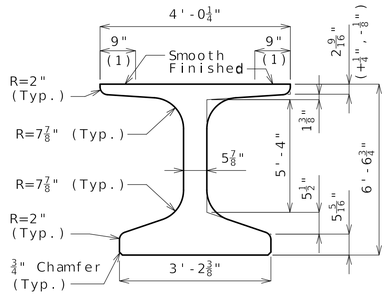

DIMENSIONS

(2) Outer strands tensioned to 2.02 kips/strand and inner strands to 8 kips/strand. Placed symmetrical about ℄ Girder. May be moved laterally in pairs.

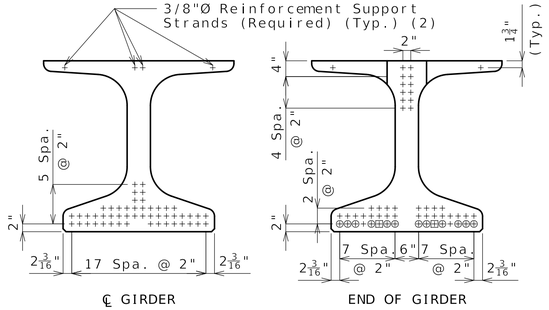

STRAND ARRANGEMENT

+ Indicates prestressing strand.

○ Indicates cut & shop bend with 3'-0" projection.

□ Indicates debonded for 4'-0" from end of girder.

Cut top 2 rows of strands with a 12" projection and bend in shop (cut any remaining top strands within 1" of end of girder)

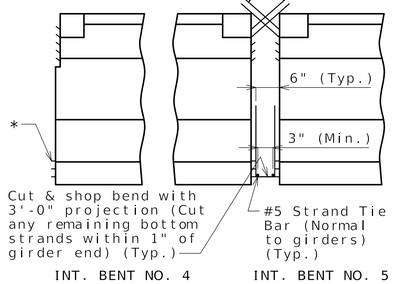

STRANDS AT GIRDER ENDS

* Prestressing strands at Int. Bent No. 4 shall be trimmed to 1 inch and shall be encased in concrete diaphragm.

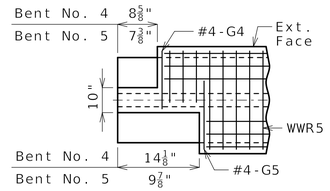

LEFT EXTERIOR GIRDER AT INTERMEDIATE BENT
Rotate 180° for right ext.

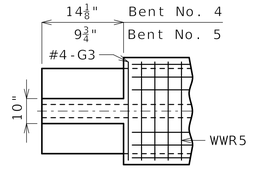

INTERIOR GIRDER AT ALL BENTS

TOP FLANGE BLOCKOUT

Bill of Reinforcing Steel - Each Girder			
No.	Size/ Mark	Length	Shape
274	5 B1	7'-11"	11S
294	4 D1	4'-0"	9S
2	4 G3	3'-10¼"	20
2	4 G4	2'-3"	20
2	4 G5	2'-8⅛"	20

Bending Diagrams

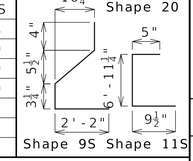

Welded Wire Reinforcement - Each Girder

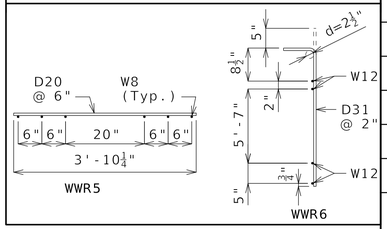

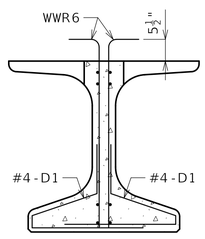

SECTION A-A
Strands not shown for clarity.

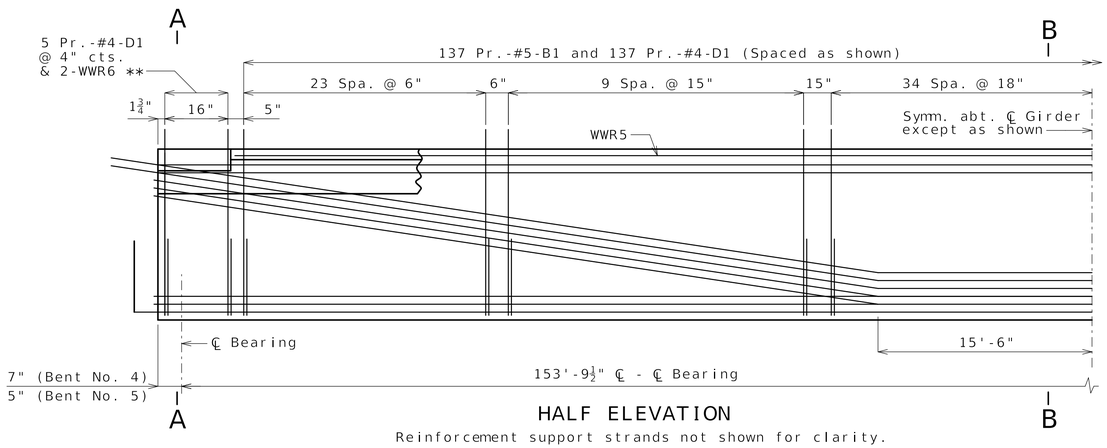

HALF ELEVATION
Reinforcement support strands not shown for clarity.

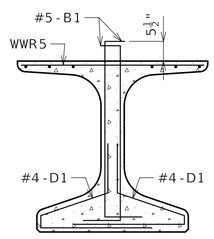

SECTION B-B
Strands not shown for clarity.

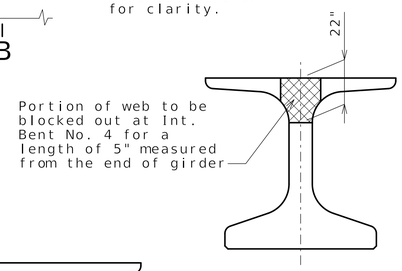

WEB BLOCKOUT DETAIL
Web blockout required for Girders in Span (4-5) at Int. Bent No. 4.

All dimensions are out to out.

Hooks and bends shall be in accordance with the CRSI Manual of Standard Practice for Detailing Reinforced Concrete Structures, Stirrup and Tie Dimensions.

Actual bar lengths are measured along centerline of bar to the nearest inch.

Minimum clearance to reinforcing shall be one inch.

All bar reinforcement shall be ASTM A615 or A706 Grade 60.

The two D1 bars may be furnished as one bar at the fabricator's option.

All B1 bars shall be epoxy coated.

G4 and G5 not required for interior girders. G3 not required for exterior girders of intermediate spans. Half no. of G3, G4 and G5 not required for ext. girders of end spans.

** WWR6 shall terminate 1/2" from the top of girder at Int. Bent No. 4 and shall not be exposed.

General Notes:

Concrete for prestressed girders shall be Class A-1 with f'c = 9000 psi and f'ci = 7000 psi.

Use 50 strands, 0.6"Ø Grade 270, with an initial prestress force of 2197 kips.

Pretensioned members shall be in accordance with Sec 1029.

Fabricator shall be responsible for location and design of lifting devices.

Exterior and interior girders are the same except: coil ties, top flange blockout, coil inserts for slab drains, holes for steel intermediate diaphragms.

For Girder Camber Diagram, see Sheet No. 27.

The 1 1/2"Ø holes shall be cast in the web for steel intermediate diaphragms. Drilling is not allowed. For location of holes and details of steel intermediate diaphragms, see Sheet No. 22.

For location of coil inserts at slab drains, see Sheet No. 28.

For location of coil ties at concrete diaphragms and integral bents, see Sheets No. 25 and 26.

For location of slotted wells in end of girder at Int. Bent No. 4, see Sheet No. 29.

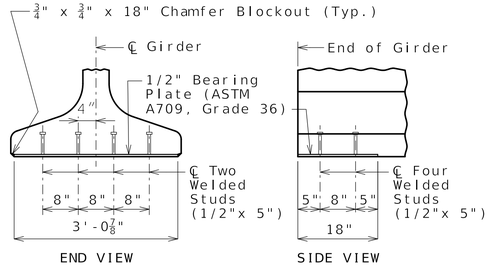

BEARING PLATE

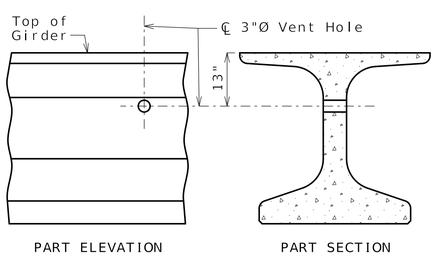

VENT HOLE
Place vent holes at or near upgrade 1/3 point of girders and clear reinforcing steel or strands by 1 1/2" minimum and steel intermediate diaphragm bolt connections by 6" minimum.

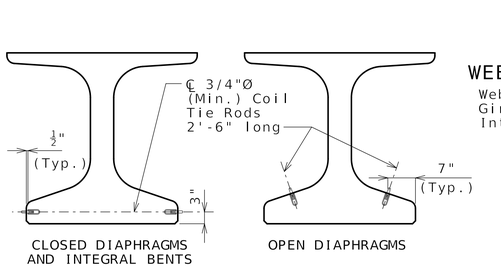

COIL TIES
Exclude coil tie at exterior face of exterior girders except at integral end bents.

NU-GIRDERS
SPAN (4-5)

Designed CMR JUN 2026
Detailed SLF JUL 2026
Checked TPL AUG 2026

Note: This drawing is not to scale. Follow dimensions.

STATE OF MISSOURI
MARTIN ALAN THORNE
NUMBER PE-2013006488
NATIONAL EN

DATE PREPARED 2-SEP-2026
ROUTE I-70 | STATE MO
DISTRICT BR | SHEET NO. BR05-20
COUNTY BOONE
JOB NUMBER JST0017
CONTRACT ID. 251203-D01
PROJECT NO. IS 70-2(128)
BRIDGE NO. A9820

REV	DATE	DESCRIPTION
0	090426	RFC BRIDGE A9820

IF A SEAL IS PRESENT ON THIS SHEET IT HAS BEEN ELECTRONICALLY SEALED AND DATED.

MISSOURI HIGHWAYS AND TRANSPORTATION COMMISSION
105 WEST CAPITOL
JEFFERSON CITY, MO 65102
1-888-ASK-MODOT (1-888-275-6636)

IMPROVE I-70 ROCHEPORT TO COLUMBIA

MO STATE CERTIFICATE OF AUTHORITY #000159 ENGINEERING

HORNER SHIFRIN
THE POWER OF EXPERIENCE IN MOTION
ST. LOUIS, MISSOURI 63102
401 S. 18th St., Ste. 400
314-621-6211 FAX: 314-621-6866
www.HornerShifrin.com

EMERY SAPPS & SONS, INC

REV. RevDesc

09/08/2026
Released for Construction

(1) Fabricator shall apply a bond breaker to this region.

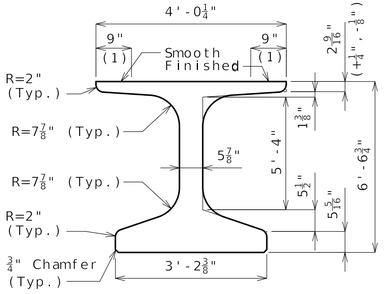

DIMENSIONS

(2) Outer strands tensioned to 2.02 kips/strand and inner strands to 8 kips/strand. Placed symmetrical about ℄ Girder. May be moved laterally in pairs.

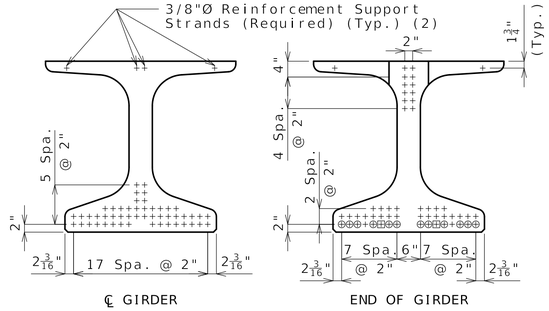

℄ GIRDER END OF GIRDER

STRAND ARRANGEMENT

\+ Indicates prestressing strand.

○ Indicates cut & shop bend with 3'-0" projection.

□ Indicates debonded for 4'-0" from end of girder.

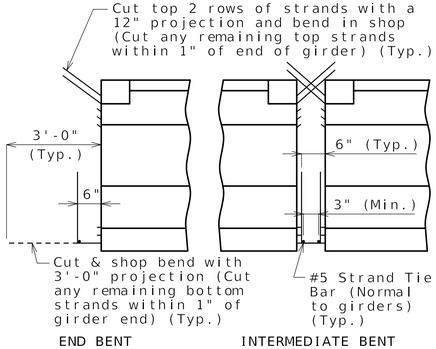

END BENT INTERMEDIATE BENT

STRANDS AT GIRDER ENDS

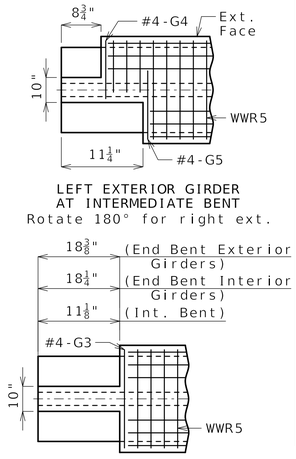

INTERIOR GIRDER AT ALL BENTS & EXTERIOR GIRDER AT END BENT

TOP FLANGE BLOCKOUT

Bill of Reinforcing Steel - Each Girder				
No.	Size/ Mark	Length	Shape	Bending Diagrams
274	5 B1	7'-11"	11S	
294	4 D1	4'-0"	9S	
2	4 G3	3'-10¼"	20	
2	4 G4	2'-3"	20	
2	4 G5	2'-8⅛"	20	

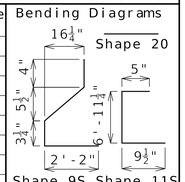

Welded Wire Reinforcement - Each Girder

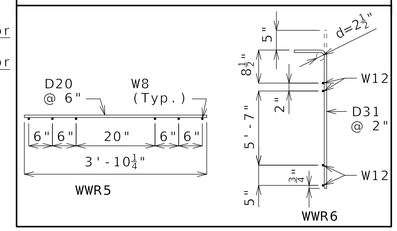

All dimensions are out to out.

Hooks and bends shall be in accordance with the CRSI Manual of Standard Practice for Detailing Reinforced Concrete Structures, Stirrup and Tie Dimensions.

Actual bar lengths are measured along centerline of bar to the nearest inch.

Minimum clearance to reinforcing shall be one inch.

All bar reinforcement shall be ASTM A615 or A706 Grade 60.

The two D1 bars may be furnished as one bar at the fabricator's option.

All B1 bars shall be epoxy coated.

G4 and G5 not required for interior girders. G3 not required for exterior girders of intermediate spans. Half no. of G3, G4 and G5 not required for ext. girders of end spans.

General Notes:

Concrete for prestressed girders shall be Class A-1 with f'c = 9000 psi and f'ci = 7000 psi.

Use 50 strands, 0.6"Ø Grade 270, with an initial prestress force of 2197 kips.

Pretensioned members shall be in accordance with Sec 1029.

Fabricator shall be responsible for location and design of lifting devices.

Exterior and interior girders are the same except: coil ties, top flange blockout, coil inserts for slab drains, holes for steel intermediate diaphragms.

For Girder Camber Diagram, see Sheet No. 27.

The 1 1/2"Ø holes shall be cast in the web for steel intermediate diaphragms. Drilling is not allowed. For location of holes and details of steel intermediate diaphragms, see Sheet No. 22.

For location of coil inserts at slab drains, see Sheet No. 28.

For location of coil ties at concrete diaphragms and integral bents, see Sheets No. 15 and 26.

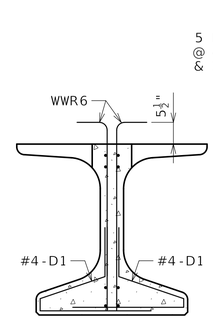

SECTION A-A

Strands not shown for clarity.

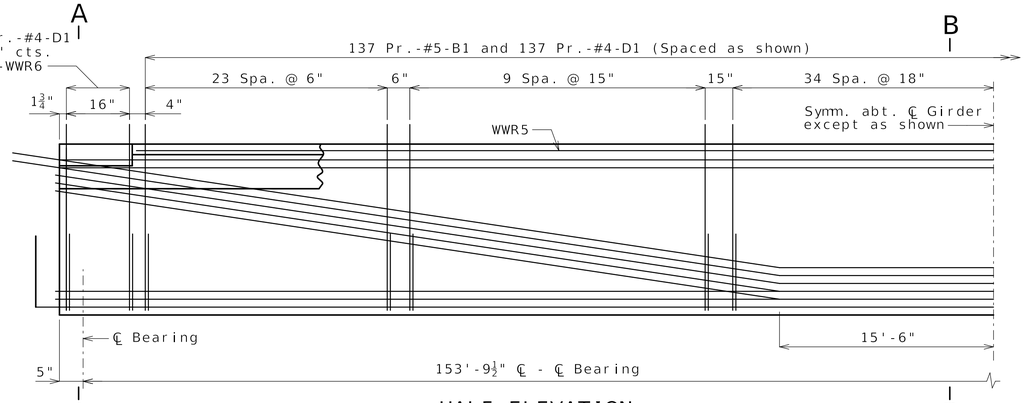

HALF ELEVATION

Reinforcement support strands not shown for clarity.

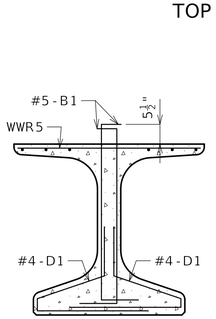

SECTION B-B

Strands not shown for clarity.

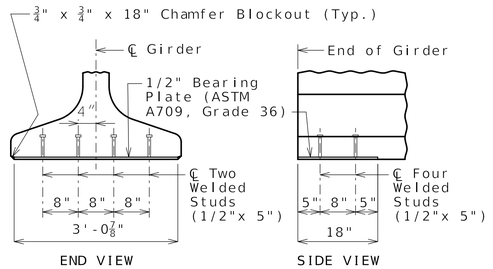

BEARING PLATE

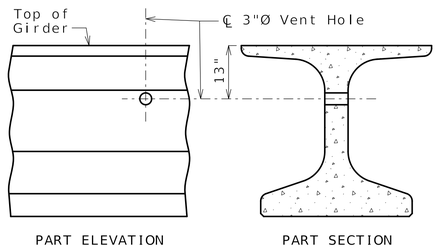

VENT HOLE

Place vent holes at or near upgrade 1/3 point of girders and clear reinforcing steel or strands by 1 1/2" minimum and steel intermediate diaphragm bolt connections by 6" minimum.

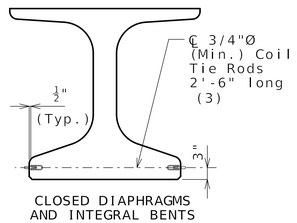

CLOSED DIAPHRAGMS AND INTEGRAL BENTS

COIL TIES

Exclude coil tie at exterior face of exterior girders except at integral end bents.

(3) 2'-3" at exterior face of exterior girders at end bents

NU-GIRDERS SPAN (5-6)

Designed CMR JUN 2026
Detailed SLF JUN 2026
Checked TPL AUG 2026

Note: This drawing is not to scale. Follow dimensions.

STATE OF MISSOURI
MARTIN ALAN THORIN
NUMBER PE-2013006488
PROFESSIONAL ENGINEER
4-SEP-2026

DATE PREPARED 2-SEP-2026
ROUTE I-70 | STATE MO
DISTRICT BR | SHEET NO. BR05-21
COUNTY BOONE
JOB NUMBER JST0017
CONTRACT ID. 251203-D01
PROJECT NO. IS 70-2(128)
BRIDGE NO. A9820

REV	DATE	DESCRIPTION
0	090426	RFC BRIDGE A9820

IF A SEAL IS PRESENT ON THIS SHEET IT HAS BEEN ELECTRONICALLY SEALED AND DATED.

MISSOURI HIGHWAYS AND TRANSPORTATION COMMISSION
105 WEST CAPITOL
JEFFERSON CITY, MO 65102
1-888-ASK-MODOT (1-888-275-6636)

IMPROVE I-70 ROCHEPORT TO COLUMBIA

MO STATE CERTIFICATE OF AUTHORITY #000159 ENGINEERING

EMERY SAPPS SONS, INC

HORNER SHIFRIN
THE POWER OF BEING UNDERSTOOD
401 S. 18th St., Ste. 400
St. Louis, MO 63103
314-231-4321 FAX: 314-531-4986
www.HornerShifrin.com

REV. RevDesc

09/08/2026
Released for Construction

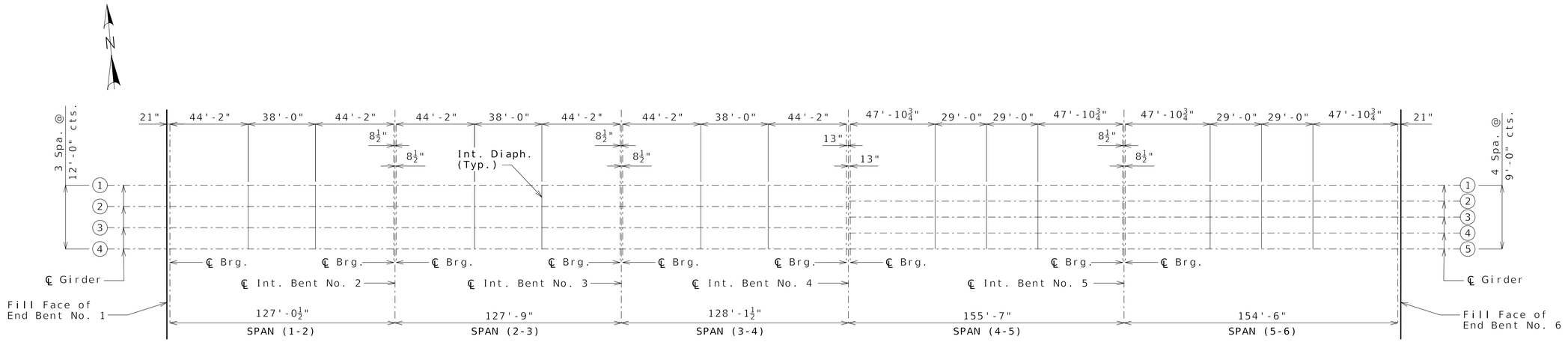

PLAN SHOWING LOCATION OF STEEL INTERMEDIATE DIAPHRAGMS

Longitudinal dimensions are horizontal.

Note:

Work this sheet with Sheet No. 23.

STEEL INTERMEDIATE DIAPHRAGM FRAMING PLAN

Designed SBH JUL 2026
Detailed CAB JUL 2026
Checked TPL JUL 2026

Note: This drawing is not to scale. Follow dimensions.

STATE OF MISSOURI
MARTIN ALAN THORIN
NUMBER PE-2013006488
PROFESSIONAL ENGINEER
4-24-26

DATE PREPARED
2-SEP-2026

ROUTE	STATE
I-70	MO

DISTRICT	SHEET NO.
BR	BR05-22

COUNTY
BOONE

JOB NUMBER
JST0017

CONTRACT ID.
251203-D01

PROJECT NO.
IS 70-2(128)

BRIDGE NO.
A9820

REV	DATE	DESCRIPTION
0	090426	RFC BRIDGE A9820

IF A SEAL IS PRESENT ON THIS SHEET IT HAS BEEN ELECTRONICALLY SEALED AND DATED.

MISSOURI HIGHWAYS AND TRANSPORTATION COMMISSION

105 WEST CAPITOL
JEFFERSON CITY, MO 65102
1-888-ASK-MODOT (1-888-275-6636)

IMPROVE I-70 ROCHEPORT TO COLUMBIA

HORNER SHIFRIN
THE POWER OF COLLABORATION
401 S. 18th St., Ste. 400
St. Louis, MO 63103
314-621-4321 FAX: 314-621-6986
www.HornerShifrin.com

EMERY SAPPS SONS, INC

MO STATE CERTIFICATE OF AUTHORITY #000159 ENGINEERING

REV. RevDesc

B_JST0017_A9820_22_Framing Plan.dgn 1:02:02 AM Eastern 2-SEP-2026

09/08/2026
Released for Construction

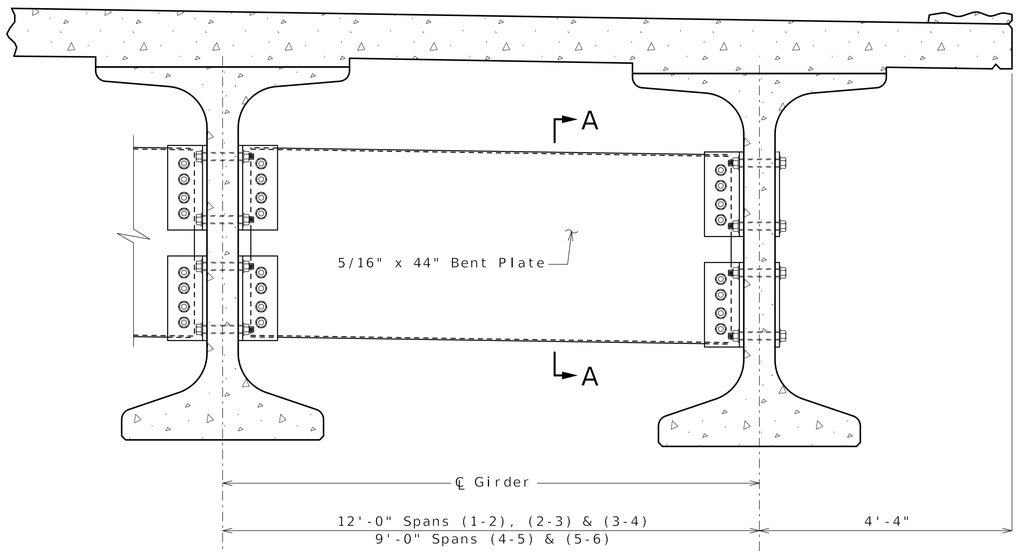

PART SECTION SHOWING
INTERMEDIATE DIAPHRAGMS

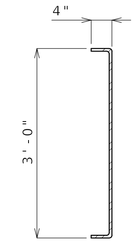

SECTION A-A

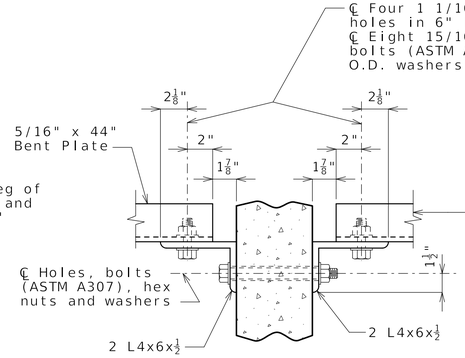

SECTION B-B

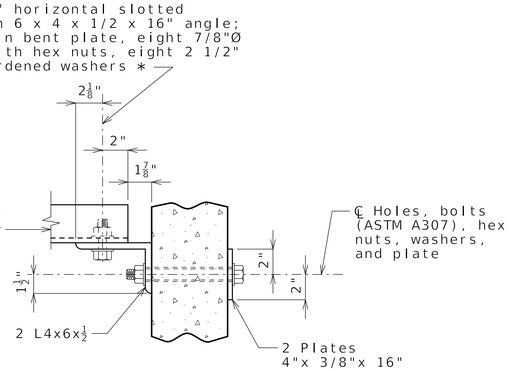

SECTION C-C

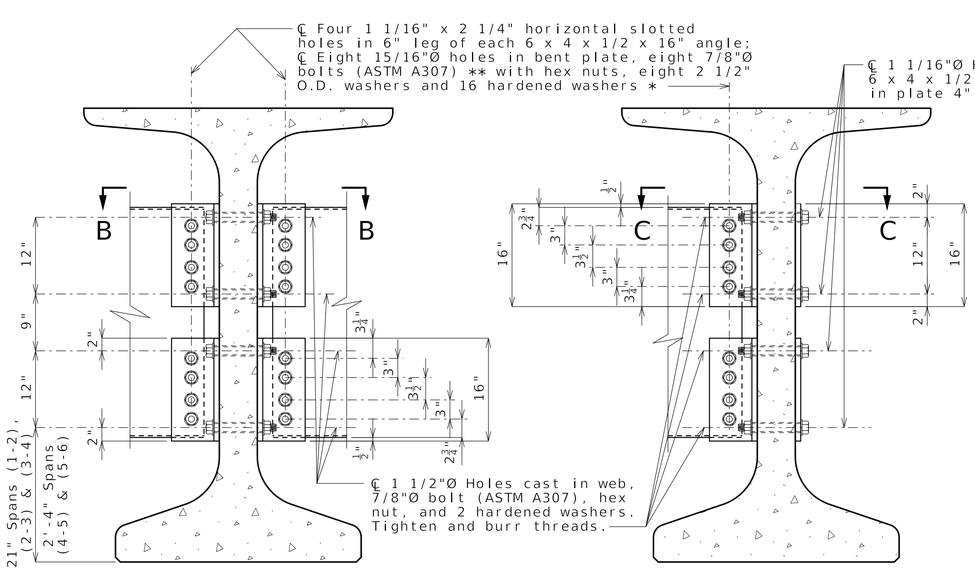

SECTION THRU INT. GIRDER
AT DIAPHRAGM

SECTION THRU EXT. GIRDER
AT DIAPHRAGM

STEEL DIAPHRAGM NOTES:

* In lieu of 2 1/2" outside diameter washers, contractor may substitute a 3/16" (Min. thickness) plate with four 15/16"Ø holes and one hardened washer per bolt.

** Bolts shall be tightened to provide a tension of one-half that specified in Sec 712 for high strength bolt installation. ASTM F3125 Grade A325 Type 1 bolts may be substituted for and installed in accordance with the requirements for the specified ASTM A307 bolts.

All diaphragm materials including bolts, nuts, and washers shall be galvanized.

Fabricated structural steel shall be ASTM A709 Grade 36 except as noted.

Shop drawings will not be required for steel intermediate diaphragms and angle connections.

For location of intermediate diaphragms, see Sheet No. 22.

STEEL INTERMEDIATE DIAPHRAGM DETAILS

Designed CMR JUL 2026
Detailed SLF MAY 2026
Checked TPL JUL 2026

Note: This drawing is not to scale. Follow dimensions.

STATE OF MISSOURI
MARTIN ALAN THORNBURG
NUMBER PE-2013006488
PROFESSIONAL ENGINEER
4-2-26

DATE PREPARED
2-SEP-2026

ROUTE	STATE
I-70	MO
DISTRICT	SHEET NO.
BR	BR05-23

COUNTY
BOONE

JOB NUMBER
JST0017

CONTRACT ID.
251203-D01

PROJECT NO.
IS 70-2(128)

BRIDGE NO.
A9820

REV	DATE	DESCRIPTION
0	090426	RFC BRIDGE A9820

IF A SEAL IS PRESENT ON THIS SHEET IT HAS BEEN ELECTRONICALLY SEALED AND DATED.

MISSOURI HIGHWAYS AND TRANSPORTATION COMMISSION
105 WEST CAPITOL
JEFFERSON CITY, MO 65102
1-888-ASK-MODOT (1-888-275-6636)

IMPROVE I-70 ROCHEPORT TO COLUMBIA

MO STATE CERTIFICATE OF AUTHORITY #000159 ENGINEERING

HORNER & SHIFRIN
The Power of Integrated Solutions
401 S. 18th St., Ste. 400
St. Louis, MO 63103-2709
314-531-1420 FAX: 314-531-0966
www.HornerShifrin.com

EMERY SAPP& SONS, INC

REV: RevDesc

09/08/2026
Released for Construction

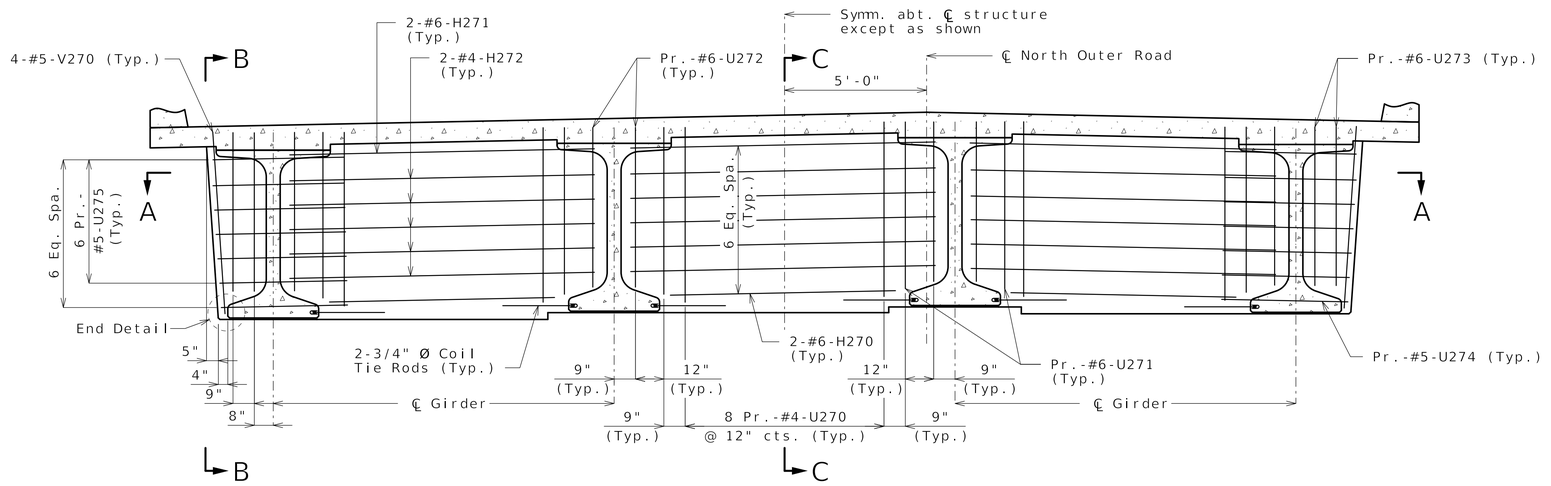

SECTION NEAR INTERMEDIATE BENT
Normal to ℄ Structure

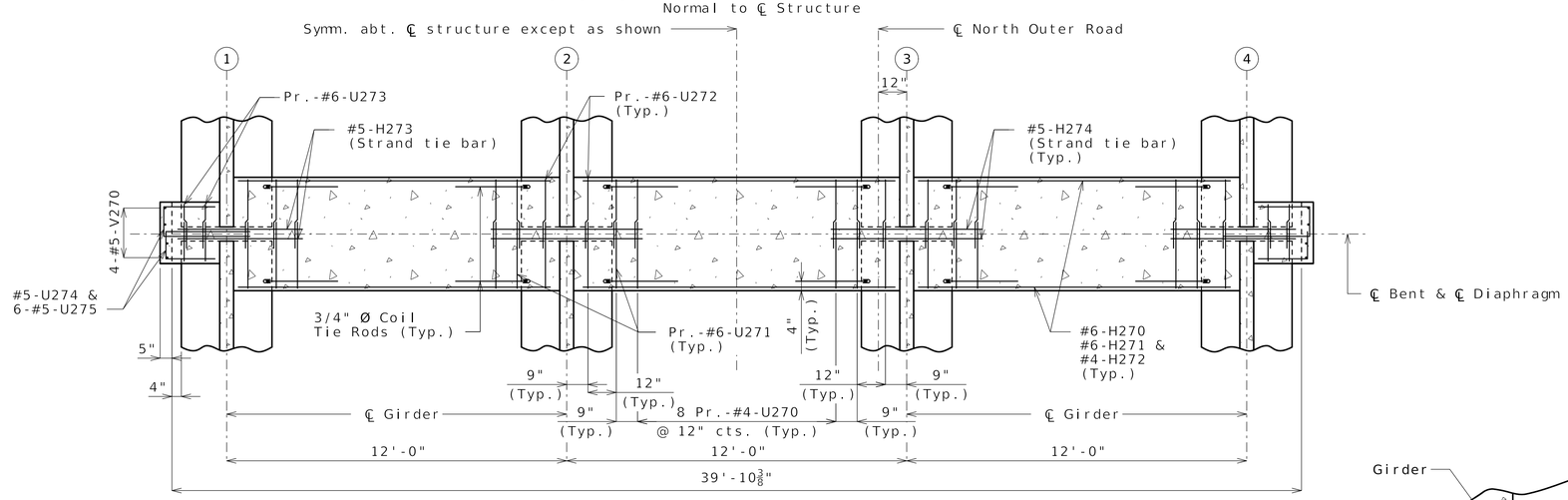

SECTION A-A

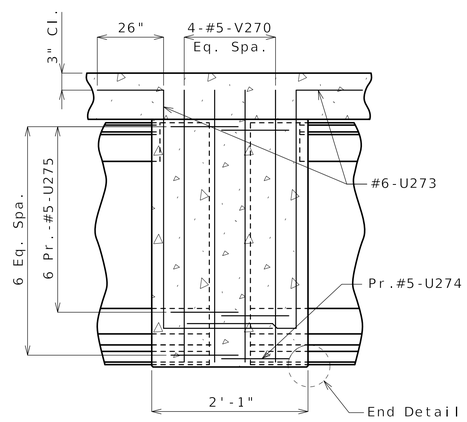

SECTION B-B

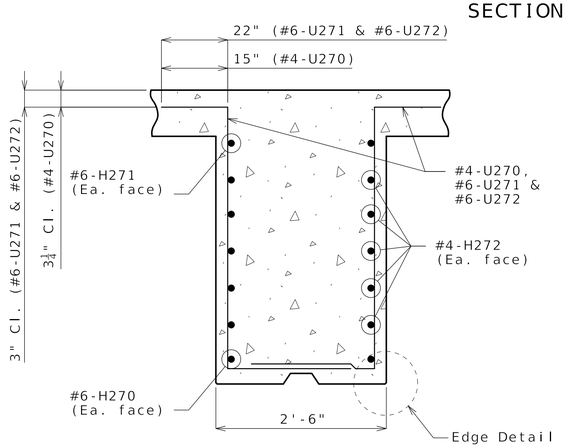

SECTION C-C

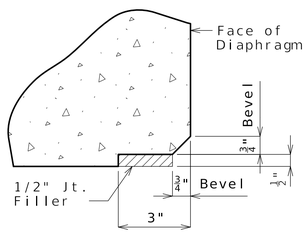

EDGE DETAIL

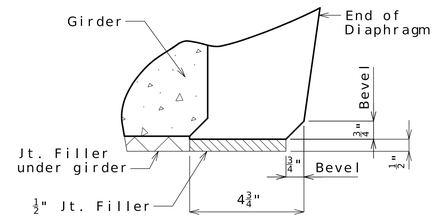

END DETAIL

Notes:

For location of Strand Tie Bars, see Sheets No. 18 & 19.

For location and details of Coil Tie Rods, see Sheets No. 18 & 19.

Diaphragms at intermediate bents shall be built vertical.

Bar marks for Intermediate Bent No. 2 shown (200 series). Intermediate Bent No. 3 similar (300 series).

CONCRETE DIAPHRAGM AT INTERMEDIATE BENTS NO. 2 & 3

Designed SBH JUL 2026
Detailed SLF JUL 2026
Checked CMR AUG 2026

Note: This drawing is not to scale. Follow dimensions.

STATE OF MISSOURI
MARTIN ALAN THORNTON
NUMBER PE-2013006488
PROFESSIONAL ENGINEER
4-2-26

DATE PREPARED: 2-SEP-2026
ROUTE: I-70 | STATE: MO
DISTRICT: BR | SHEET NO.: BR05-24
COUNTY: BOONE
JOB NUMBER: JST0017
CONTRACT ID.: 251203-D01
PROJECT NO.: IS 70-2(128)
BRIDGE NO.: A9820

REV	DATE	DESCRIPTION
0	090426	RFC BRIDGE A9820

IF A SEAL IS PRESENT ON THIS SHEET IT HAS BEEN ELECTRONICALLY SEALED AND DATED.

MISSOURI HIGHWAYS AND TRANSPORTATION COMMISSION
105 WEST CAPITOL
JEFFERSON CITY, MO 65102
1-888-ASK-MODOT (1-888-275-6636)

IMPROVE I-70 ROCHEPORT TO COLUMBIA

HORNER SHIFRIN
THE POWER OF SHIFT THINKING
401 S. 18th St., Ste. 100
St. Louis, MO 63103-2709
314-531-4321 FAX: 314-531-0966
www.hornershifrin.com

EMERY SAPP & SONS, INC

MO STATE CERTIFICATE OF AUTHORITY #000159 ENGINEERING

REV. RevDesc

09/08/2026
Released for Construction

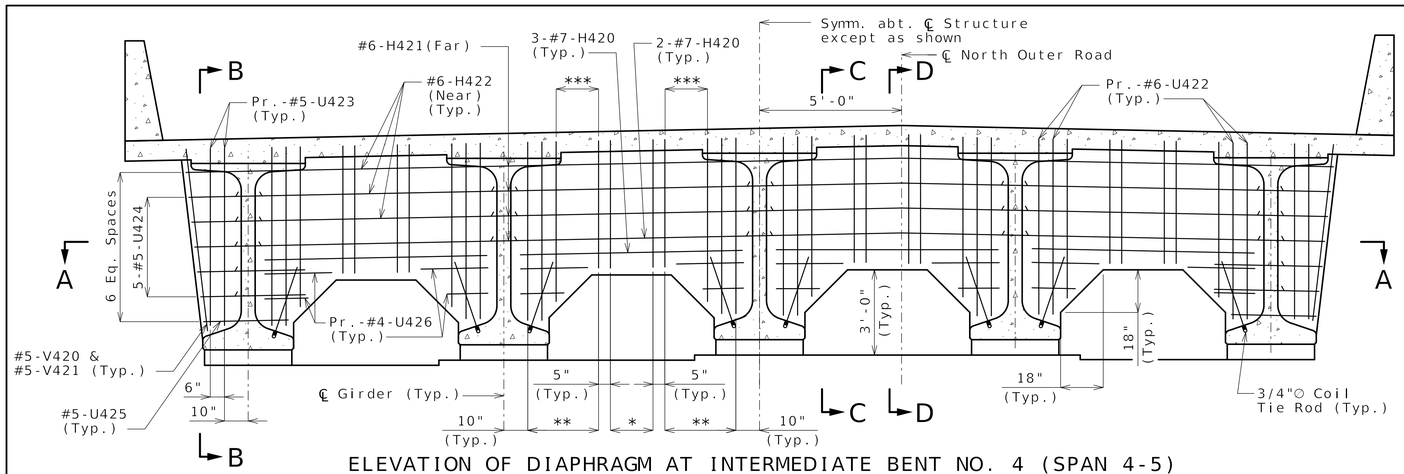

ELEVATION OF DIAPHRAGM AT INTERMEDIATE BENT NO. 4 (SPAN 4-5)

* 3 Pr-#4-U420 & 3-#4-U428 @ 9" cts. (Typ. @ Span 4-5) or 7 Pr-#4-U430 & 7-#4-U438 @ 9" cts. (Typ. @ Span 3-4)

** 5 Spa. @ 6" cts. (Typ.)

*** 4 Pr.-#6-U421 & 4-#4-U427 (Typ. @ Span 4-5) or 4 Pr.-#6-U431 & 4-#4-U437 (Typ. @ Span 3-4)

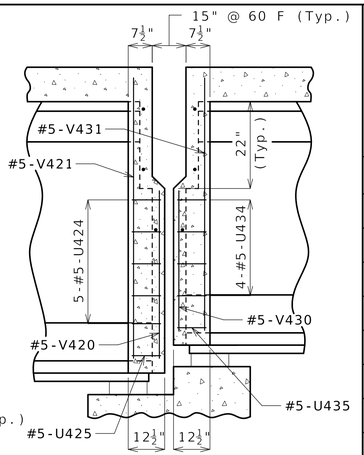

SECTION B-B

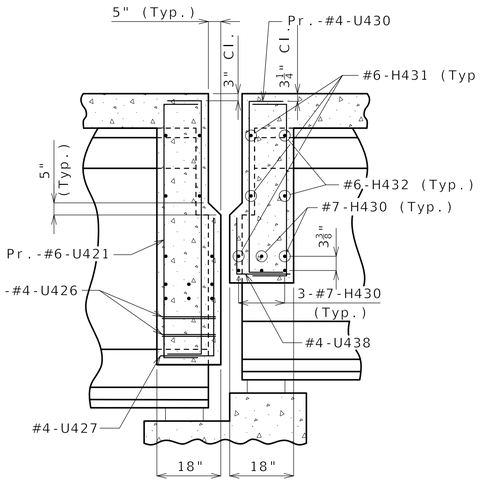

SECTION C-C

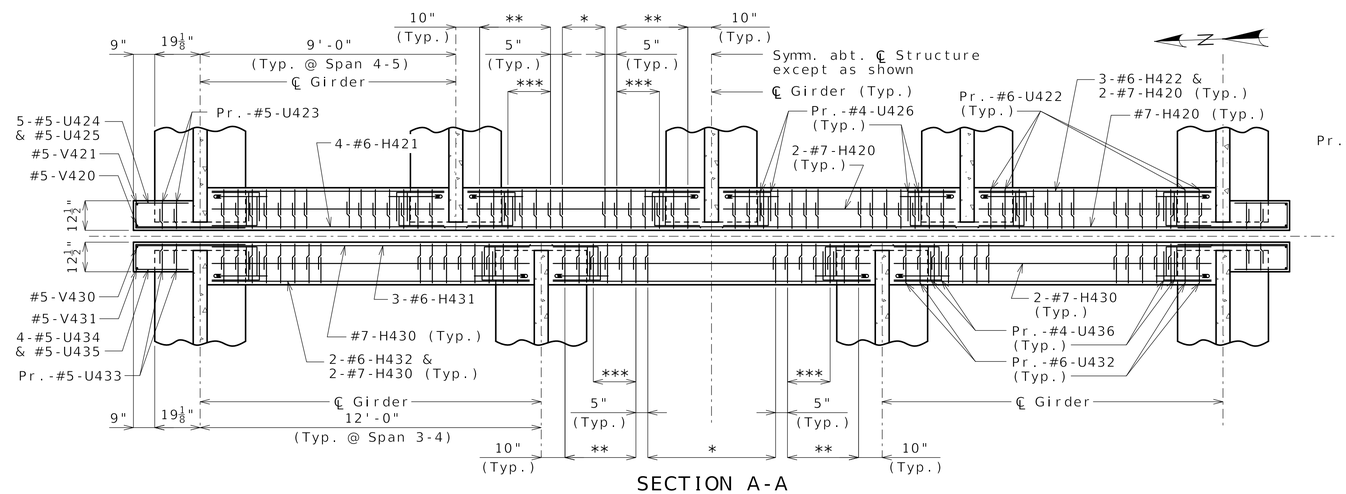

SECTION A-A

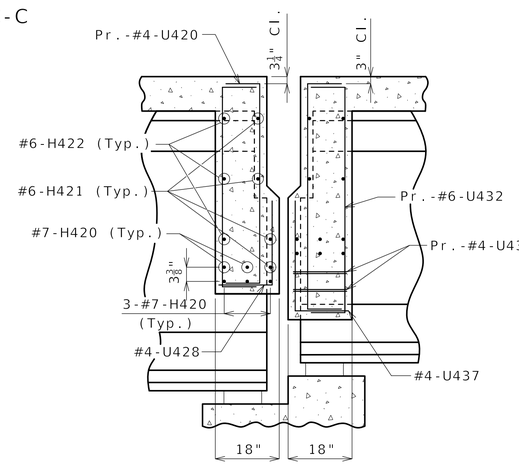

SECTION D-D

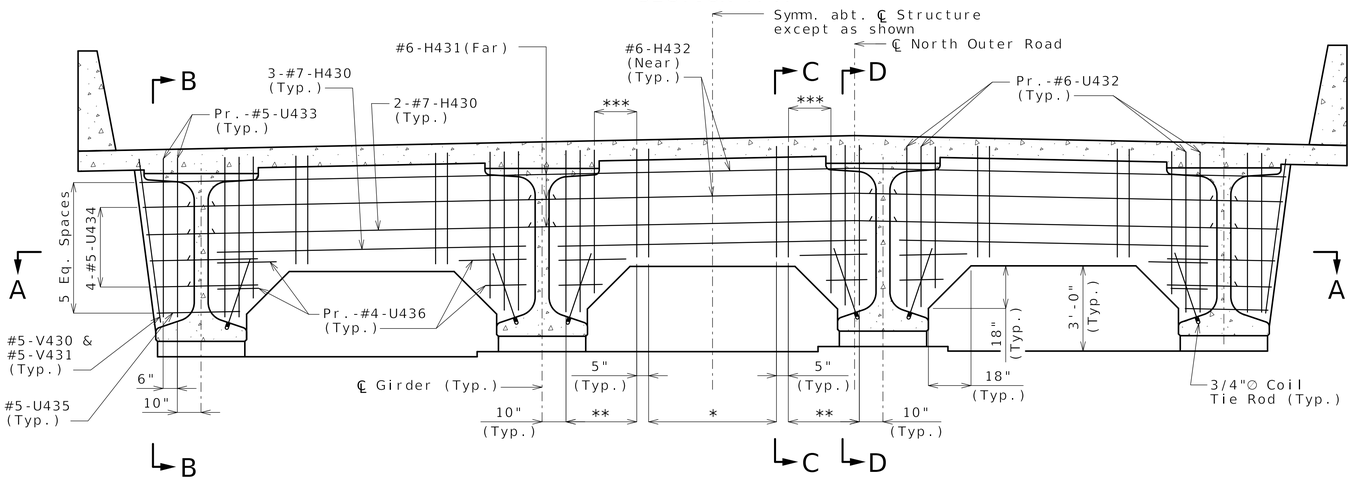

ELEVATION OF DIAPHRAGM AT INTERMEDIATE BENT NO. 4 (SPAN 3-4)

Notes:

For location of Strand Tie Bars, see Sheets No. 19 & 20.

For location and details of Coil Tie Rods, see Sheets No. 19 & 20.

Diaphragms at intermediate bent shall be built vertical.

CONCRETE DIAPHRAGM AT INTERMEDIATE BENT NO. 4

Designed SBH JUL 2026
Detailed SLF JUL 2026
Checked CMR AUG 2026

Note: This drawing is not to scale. Follow dimensions.

STATE OF MISSOURI — PROFESSIONAL ENGINEER — MARTIN ALAN THORNTON — NUMBER PE-2013006488

DATE PREPARED: 2-SEP-2026
ROUTE: I-70 | STATE: MO
DISTRICT: BR | SHEET NO.: BR05-25
COUNTY: BOONE
JOB NUMBER: JST0017
CONTRACT ID.: 251203-D01
PROJECT NO.: IS 70-2(128)
BRIDGE NO.: A9820

REV	DATE	DESCRIPTION
0	090426	RFC BRIDGE A9820

IF A SEAL IS PRESENT ON THIS SHEET IT HAS BEEN ELECTRONICALLY SEALED AND DATED.

MISSOURI HIGHWAYS AND TRANSPORTATION COMMISSION
105 WEST CAPITOL
JEFFERSON CITY, MO 65102
1-888-ASK-MODOT (1-888-275-6636)

IMPROVE I-70 ROCHEPORT TO COLUMBIA

EMERY SAPP & SONS, INC

HORNER SHIFRIN
HORNER & SHIFRIN, INC. ARCHITECTS/ENGINEERS
401 S. 18th St., Ste. 400
St. Louis, MO 63103-2709
314-531-1420 FAX: 314-531-6966
www.hornershifrin.com

MO STATE CERTIFICATE OF AUTHORITY #000159 ENGINEERING

REV. RevDesc

B_JST0017_A9820_25_Int. Bent 4 Diaphragm.dgn 1:01:59 AM Eastern 2-SEP-2026

09/08/2026
Released for Construction

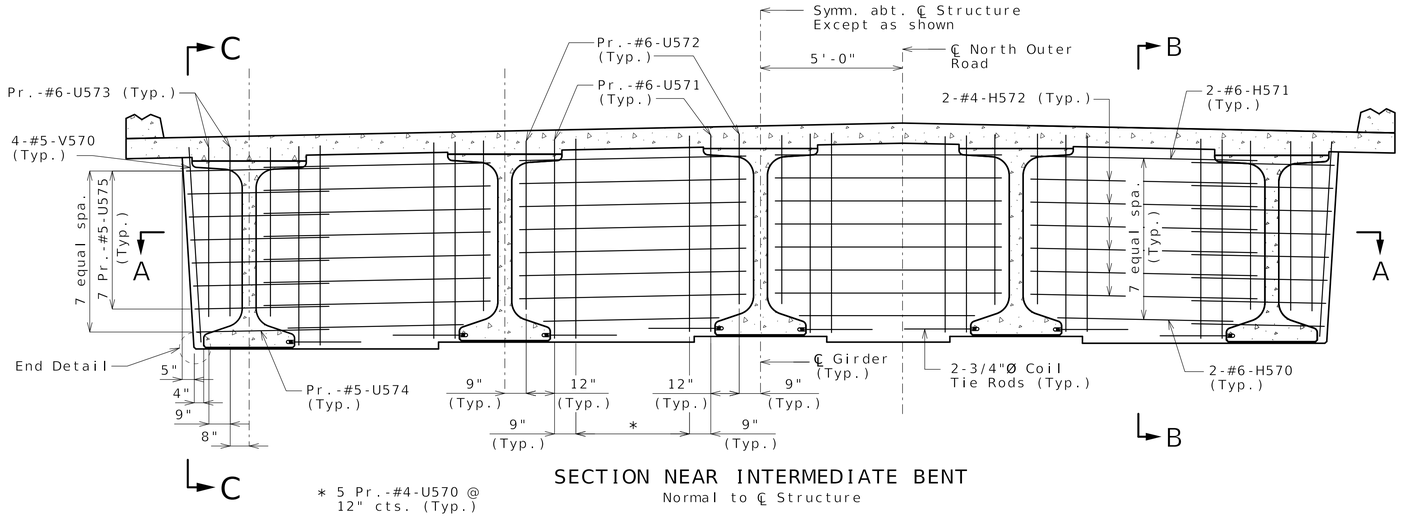

* 5 Pr.-#4-U570 @ 12" cts. (Typ.)

SECTION NEAR INTERMEDIATE BENT
Normal to ℄ Structure

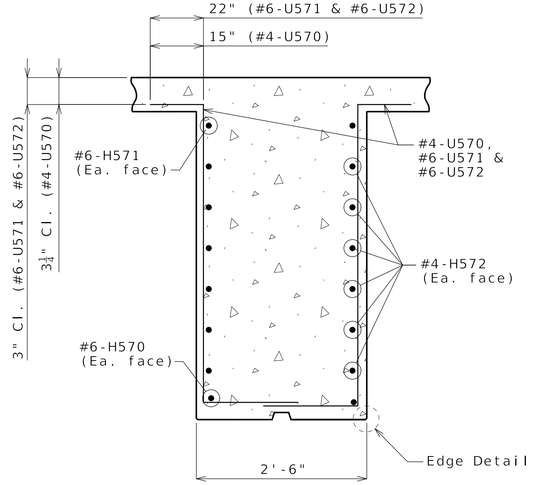

SECTION B-B

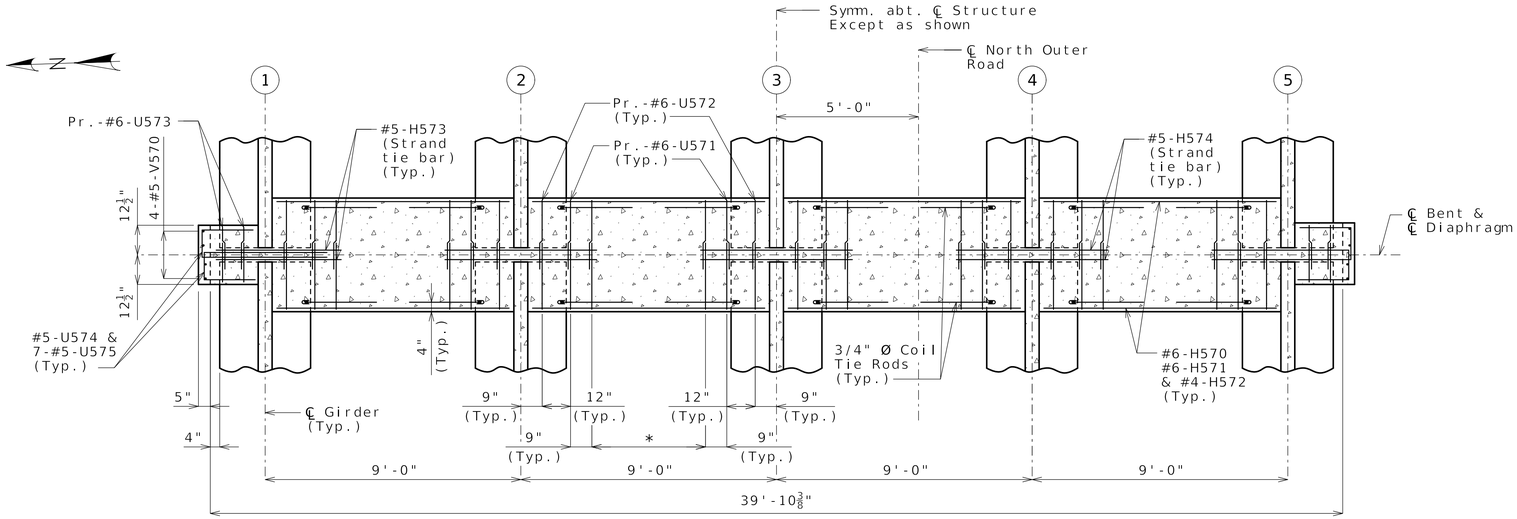

SECTION A-A

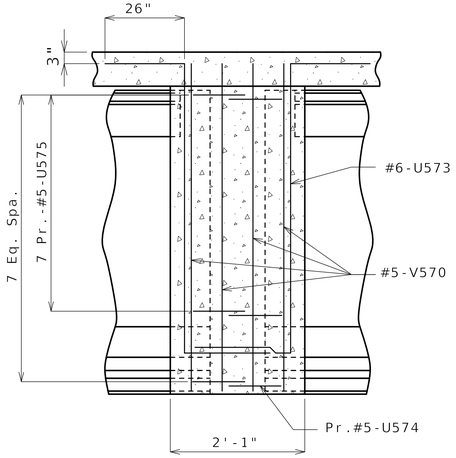

SECTION C-C

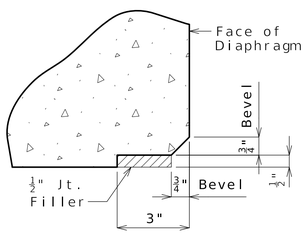

EDGE DETAIL

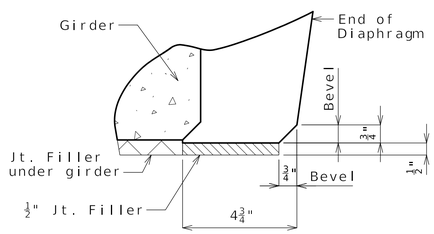

END DETAIL

Notes:

For location of Strand Tie Bars, see Sheets No. 20 & 21.

For location and details of Coil Tie Rods, see Sheets No. 20 & 21.

Diaphragms at intermediate bents shall be built vertical.

CONCRETE DIAPHRAGM AT INTERMEDIATE BENT NO. 5

Designed MAC APR 2026
Detailed SLF JUL 2026
Checked CMR AUG 2026

Note: This drawing is not to scale. Follow dimensions.

STATE OF MISSOURI
MARTIN ALAN THORNTON
NUMBER PE-2013006488
PROFESSIONAL ENGINEER
4-2-26

DATE PREPARED: 2-SEP-2026
ROUTE: I-70 | STATE: MO
DISTRICT: BR | SHEET NO.: BR05-26
COUNTY: BOONE
JOB NUMBER: JST0017
CONTRACT ID.: 251203-D01
PROJECT NO.: IS 70-2(128)
BRIDGE NO.: A9820

REV	DATE	DESCRIPTION
0	090426	RFC BRIDGE A9820

MISSOURI HIGHWAYS AND TRANSPORTATION COMMISSION
105 WEST CAPITOL
JEFFERSON CITY, MO 65102
1-888-ASK-MODOT (1-888-275-6636)

IMPROVE I-70 ROCHEPORT TO COLUMBIA

HORNER SHIFRIN
THE POWER OF BEING UNDERSTOOD
401 S. 18th St. Ste. 400
St. Louis, MO 63103
314-231-4321 FAX: 314-531-6866
www.hornershifrin.com

EMERY SAPPS SONS, INC

MO STATE CERTIFICATE OF AUTHORITY #000159 ENGINEERING

REV. RevDesc

IF A SEAL IS PRESENT ON THIS SHEET IT HAS BEEN ELECTRONICALLY SEALED AND DATED.

09/08/2026
Released for Construction

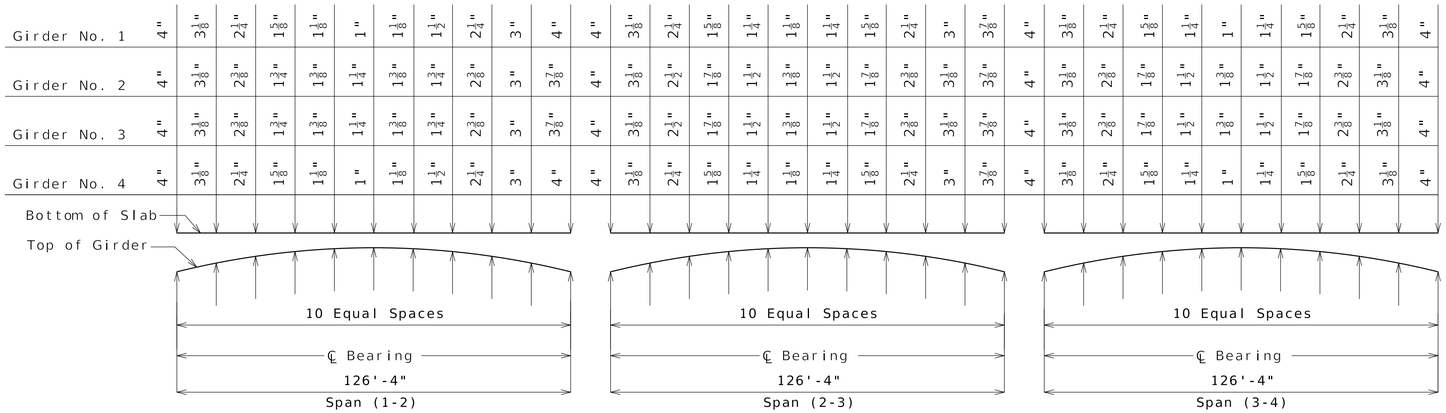

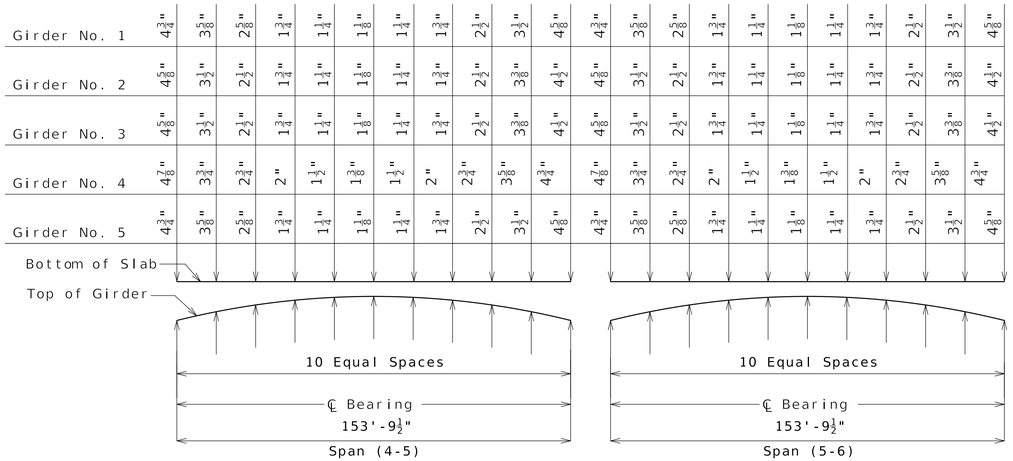

THEORETICAL SLAB HAUNCHING DIAGRAM

If girder camber is different from that shown in the camber diagram, in order to maintain minimum slab thickness, an adjustment of the slab haunches, an increase in slab thickness or a raise in grade uniformly throughout the structure shall be necessary. The haunch shall be limited to ensure the projecting girder reinforcement or hairpin bar is embedded into slab at least 2 inches.

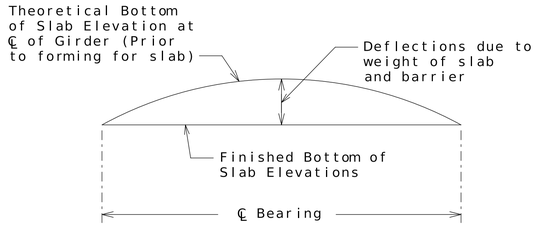

TYPICAL SLAB ELEVATIONS DIAGRAM

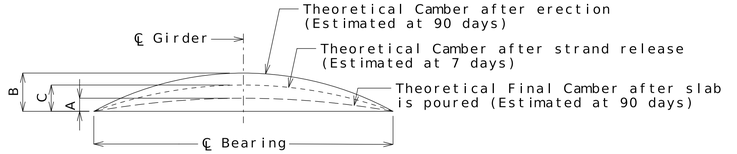

Girder	Span (1-2)			Span (2-3)			Span (3-4)		
	A	B	C	A	B	C	A	B	C
Exterior	3"	5"	3"	$2\frac{7}{8}$"	$4\frac{7}{8}$"	3"	3"	5"	3"
Interior	$2\frac{3}{4}$"		$3\frac{1}{8}$"	$2\frac{5}{8}$"	5"		$2\frac{3}{4}$"		$3\frac{1}{8}$"

Girder	Span (4-5)			Span (5-6)		
	A	B	C	A	B	C
Exterior	$3\frac{5}{8}$"	$6\frac{3}{8}$"	4"	$3\frac{5}{8}$"	$6\frac{3}{8}$"	4"
Interior	$3\frac{1}{2}$"			$3\frac{1}{2}$"		

GIRDER CAMBER DIAGRAM

Conversion Factors for Girder Camber (Estimated at 90 days):

0.1 pt. = 0.314 x 0.5 pt.
0.2 pt. = 0.593 x 0.5 pt.
0.3 pt. = 0.813 x 0.5 pt.
0.4 pt. = 0.952 x 0.5 pt.

Theoretical Bottom of Slab Elevations at Centerline of Girder (Prior to forming for slab) (Estimated at 90 days)

Girder Number	Span (1-2) (126'-4" ℄ Brg. - ℄ Brg.)										
	℄ Brg.	.10	.20	.30	.40	.50	.60	.70	.80	.90	℄ Brg.
1	602.49	602.65	602.81	602.96	603.09	603.20	603.30	603.38	603.45	603.51	603.56
2	602.73	602.90	603.07	603.22	603.35	603.47	603.57	603.65	603.71	603.76	603.80
3	602.93	603.10	603.27	603.42	603.55	603.67	603.77	603.85	603.91	603.96	604.00
4	602.69	602.85	603.01	603.16	603.29	603.40	603.50	603.58	603.65	603.71	603.76

Girder Number	Span (2-3) (126'-4" ℄ Brg. - ℄ Brg.)										
	℄ Brg.	.10	.20	.30	.40	.50	.60	.70	.80	.90	℄ Brg.
1	603.58	603.74	603.89	604.03	604.17	604.28	604.38	604.46	604.53	604.59	604.65
2	603.82	603.98	604.15	604.30	604.43	604.55	604.65	604.73	604.79	604.84	604.89
3	604.02	604.18	604.35	604.50	604.63	604.75	604.85	604.93	604.99	605.04	605.09
4	603.78	603.94	604.09	604.23	604.37	604.48	604.58	604.66	604.73	604.79	604.85

Girder Number	Span (3-4) (126'-4" ℄ Brg. - ℄ Brg.)										
	℄ Brg.	.10	.20	.30	.40	.50	.60	.70	.80	.90	℄ Brg.
1	604.66	604.82	604.98	605.13	605.26	605.38	605.48	605.56	605.63	605.68	605.74
2	604.90	605.07	605.24	605.39	605.52	605.64	605.74	605.82	605.88	605.93	605.98
3	605.10	605.27	605.44	605.59	605.72	605.84	605.94	606.02	606.08	606.13	606.18
4	604.86	605.02	605.18	605.33	605.46	605.58	605.68	605.76	605.83	605.88	605.94

Girder Number	Span (4-5) (153'-9 1/2" ℄ Brg. - ℄ Brg.)										
	℄ Brg.	.10	.20	.30	.40	.50	.60	.70	.80	.90	℄ Brg.
1	605.75	605.96	606.16	606.35	606.51	606.65	606.77	606.87	606.94	607.00	607.06
2	605.93	606.14	606.34	606.53	606.70	606.84	606.95	607.05	607.12	607.19	607.24
3	606.11	606.32	606.52	606.71	606.88	607.02	607.13	607.23	607.30	607.37	607.42
4	606.13	606.34	606.54	606.73	606.90	607.04	607.15	607.25	607.32	607.39	607.44
5	605.95	606.16	606.36	606.55	606.71	606.85	606.97	607.07	607.14	607.20	607.26

Girder Number	Span (5-6) (153'-9 1/2" ℄ Brg. - ℄ Brg.)										
	℄ Brg.	.10	.20	.30	.40	.50	.60	.70	.80	.90	℄ Brg.
1	607.07	607.28	607.48	607.66	607.83	607.97	608.09	608.19	608.26	608.33	608.38
2	607.25	607.46	607.66	607.85	608.01	608.16	608.28	608.37	608.45	608.51	608.56
3	607.43	607.64	607.84	608.03	608.19	608.34	608.46	608.55	608.63	608.69	608.74
4	607.45	607.66	607.86	608.05	608.21	608.36	608.48	608.57	608.65	608.71	608.76
5	607.27	607.48	607.68	607.86	608.03	608.17	608.29	608.39	608.46	608.53	608.58

Elevations are based on a constant slab thickness of 8 1/2" and include allowance for theoretical dead load deflections due to weight of slab and barrier.

SLAB HAUNCHING, ELEVATIONS AND CAMBER

Designed SBH JUN 2026
Detailed SLF JUN 2026
Checked CMR AUG 2026

Note: This drawing is not to scale. Follow dimensions.

B_JST0017_A9820_27_Slab Haunch & Camber.dgn
1:03:51 AM Eastern 2-SEP-2026

STATE OF MISSOURI
MARTIN ALAN THORNE
NUMBER PE-2013006488
PROFESSIONAL ENGINEER

DATE PREPARED: 2-SEP-2026
ROUTE: I-70 | STATE: MO
DISTRICT: BR | SHEET NO.: BR05-27
COUNTY: BOONE
JOB NUMBER: JST0017
CONTRACT ID.: 251203-D01
PROJECT NO.: IS 70-2(128)
BRIDGE NO.: A9820

REV	DATE	DESCRIPTION
0	090426	RFC BRIDGE A9820

IF A SEAL IS PRESENT ON THIS SHEET IT HAS BEEN ELECTRONICALLY SEALED AND DATED.

MISSOURI HIGHWAYS AND TRANSPORTATION COMMISSION
105 WEST CAPITOL
JEFFERSON CITY, MO 65102
1-888-ASK-MODOT (1-888-275-6636)

IMPROVE I-70 ROCHEPORT TO COLUMBIA

EMERY SAPP & SONS, INC

HORNER SHIFRIN
HORNER & SHIFRIN, INC.
THE PROFESSIONAL PARTNERSHIP
401 S. 18th St., Ste. 400
St. Louis, Missouri 63103-2709
314-531-1420 FAX: 314-531-0966
www.hornershifrin.com

MO STATE CERTIFICATE OF AUTHORITY #000159 ENGINEERING

REV. RevDesc

09/08/2026
Released for Construction

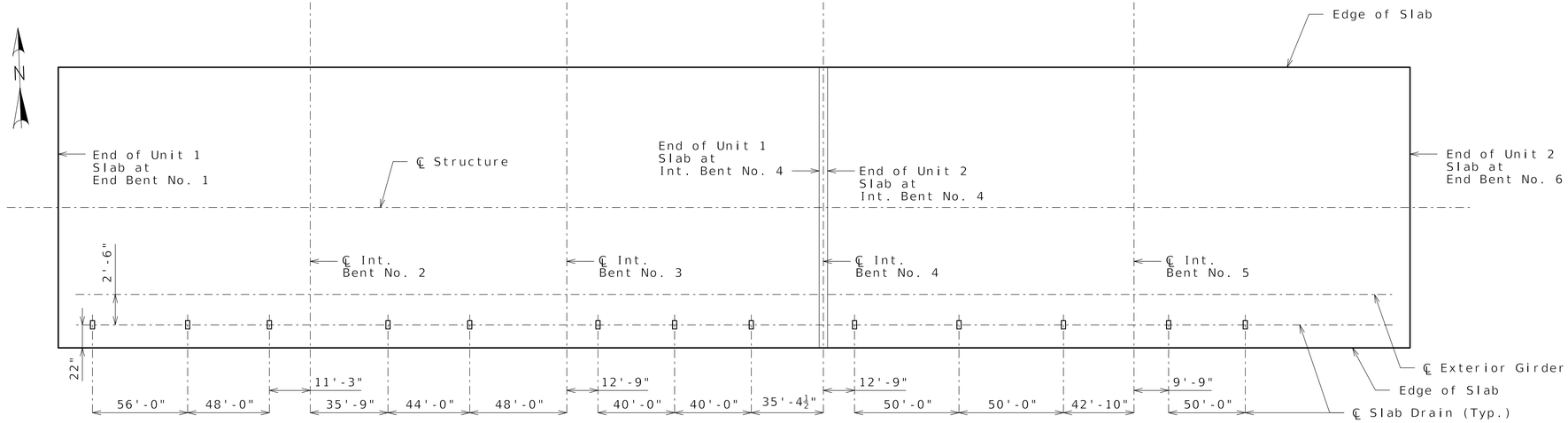

PLAN OF SLAB SHOWING SLAB DRAIN LOCATIONS

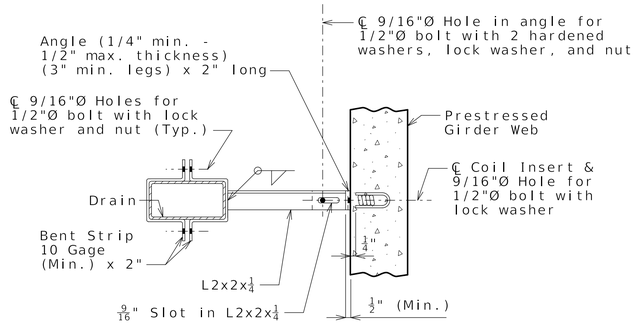

PART SECTION SHOWING BRACKET ASSEMBLY

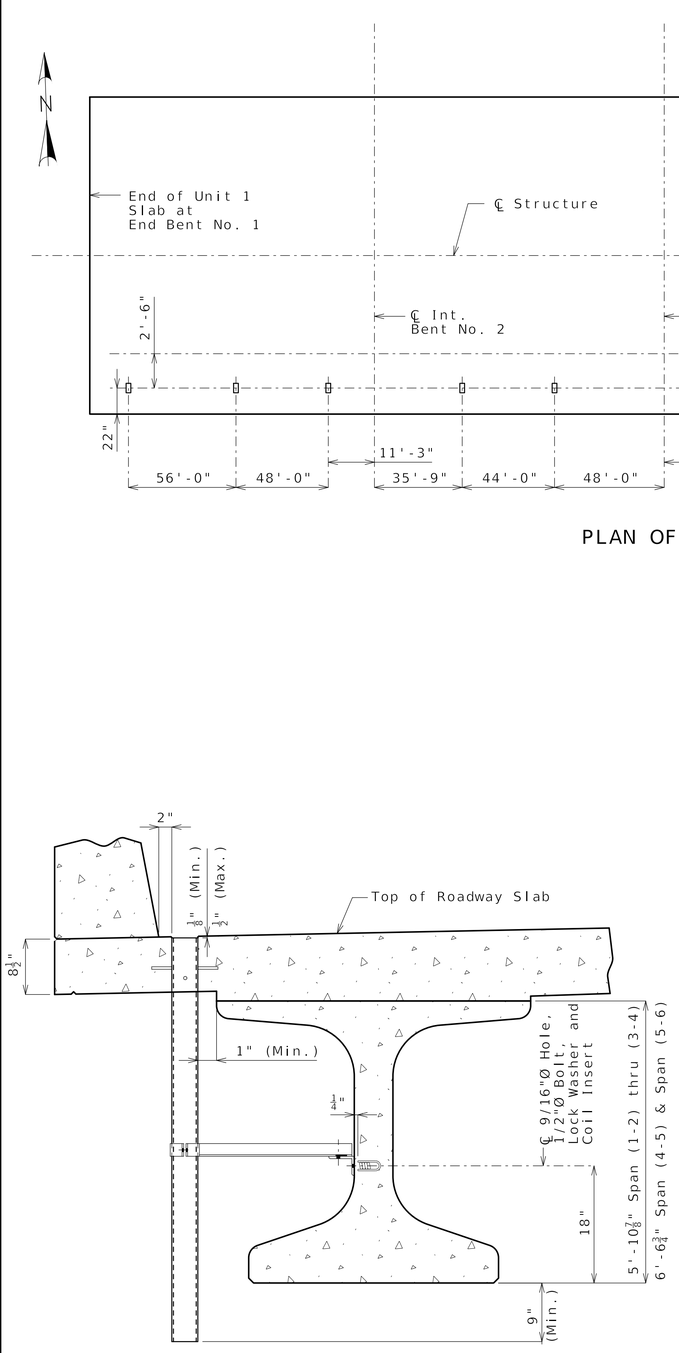

PART SECTION NEAR DRAIN

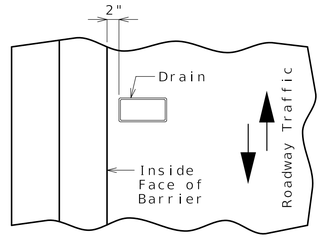

PART PLAN OF SLAB AT DRAIN

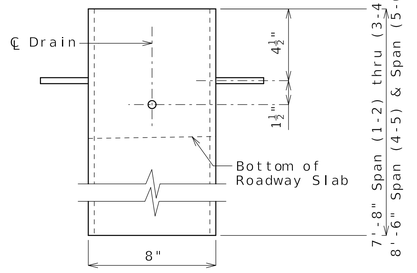

ELEVATION OF DRAIN

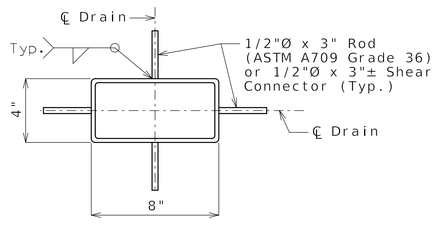

PLAN OF STEEL DRAIN OPTION

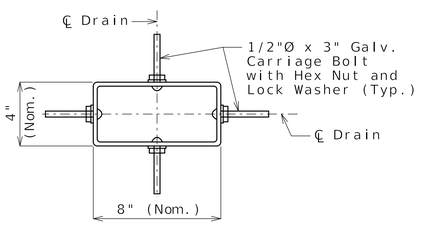

PLAN OF FRP DRAIN OPTION

General Notes:

Contractor shall have the option to construct either steel or FRP slab drains. All drains shall be of same type.

Slab drain bracket assembly shall be ASTM A709 Grade 36 steel.

Locate drains in slab by dimensions shown in Part Section Near Drain.

Reinforcing steel shall be shifted to clear drains.

The coil inserts and bracket assembly shall be galvanized in accordance with ASTM A123.

All bolts, hardened washers, lock washers and nuts shall be galvanized in accordance with ASTM F2329

All 1/2"Ø bolts shall be ASTM A307.

Shop drawings will not be required for the slab drains and the bracket assembly.

The coil insert required for the bracket assembly attachment shall be located on the prestressed girder shop drawings.

Coil inserts shall have a concrete pull-out strength (ultimate load) of at least 2,500 pounds in 5,000 psi concrete.

The bolt required to attach the slab drain bracket assembly to the prestressed girder web shall be supplied by the prestressed girder fabricator.

Notes for Steel Drain:

Slab drains may be fabricated of either 1/4" welded sheets of ASTM A709 Grade 36 steel or from 1/4" structural steel tubing ASTM A500 or A501.

Outside dimensions of drains are 8" x 4".

The drains shall be galvanized in accordance with ASTM A123.

Notes for FRP Drain:

Drains shall be machine filament-wound thermosetting resin tubing meeting the requirements of ASTM D2996 with the following exceptions:

Shape of drains shall be rectangular with outside nominal dimensions of 8" x 4".

Minimum reinforced wall thickness shall be 1/4 inch.

The resin used shall be ultraviolet (UV) resistant and/or have UV inhibitors mixed throughout. Drains may have an exterior coating for additional UV resistance.

The color of the slab drain shall be gray (Federal Standard #26373). The color shall be uniform throughout the resin and any coating used.

The combination of materials used in the manufacture of the drains shall be tested for UV resistance in accordance with ASTM D4329 Cycle A. The representative material shall withstand at least 500 hours of testing with only minor discoloration and without any physical deterioration. The contractor shall furnish the results of the required ultraviolet testing prior to acceptance of the slab drains.

At the contractor's option, drains may be field cut. The method of cutting FRP slab drain shall be as recommended by the manufacturer to ensure a smooth, chip free cut.

SLAB DRAINS

Designed SR JUL 2026
Detailed SLF APR 2026
Checked TPL JUL 2026

Note: This drawing is not to scale. Follow dimensions.

STATE OF MISSOURI
MARTIN ALAN THORIUS
NUMBER PE-2013006488
PROFESSIONAL ENGINEER
4-SEP-2026

DATE PREPARED 2-SEP-2026
ROUTE I-70 | STATE MO
DISTRICT BR | SHEET NO. BR05-28
COUNTY BOONE
JOB NUMBER JST0017
CONTRACT ID. 251203-D01
PROJECT NO. IS 70-2(128)
BRIDGE NO. A9820

REV	DATE	DESCRIPTION
0	090426	RFC BRIDGE A9820

IF A SEAL IS PRESENT ON THIS SHEET IT HAS BEEN ELECTRONICALLY SEALED AND DATED.

MISSOURI HIGHWAYS AND TRANSPORTATION COMMISSION
105 WEST CAPITOL
JEFFERSON CITY, MO 65102
1-888-ASK-MODOT (1-888-275-6636)

IMPROVE I-70 ROCHEPORT TO COLUMBIA

HORNER SHIFRIN
THE POWER OF BEING UNDERSTOOD
401 S. 18th St., Ste. 400
ST. LOUIS, MO 63103-2709
314-531-4321 FAX 314-531-6866
www.hornershifrin.com

EMERY SAPP & SONS, INC

MO STATE CERTIFICATE OF AUTHORITY #000159 ENGINEERING

REV. RevDesc

09/08/2026
Released for Construction

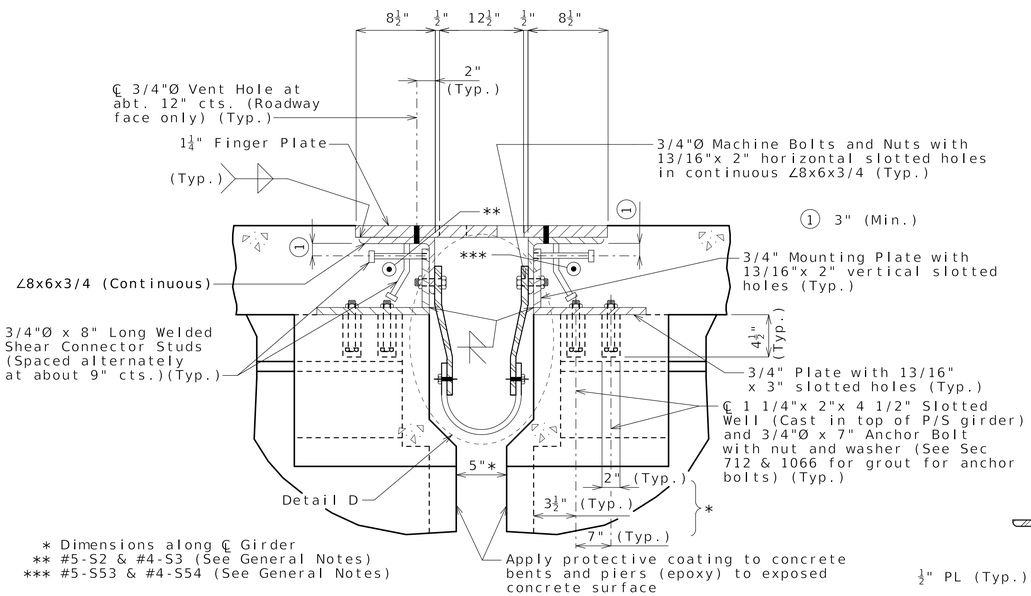

* Dimensions along ℄ Girder
** #5-S2 & #4-S3 (See General Notes)
*** #5-S53 & #4-S54 (See General Notes)

SECTION THRU DEVICE

Note:
Concrete shall be forced under and around finger plate supporting hardware, anchors, angles and bars. Proper consolidation shall be achieved by localized internal vibration.

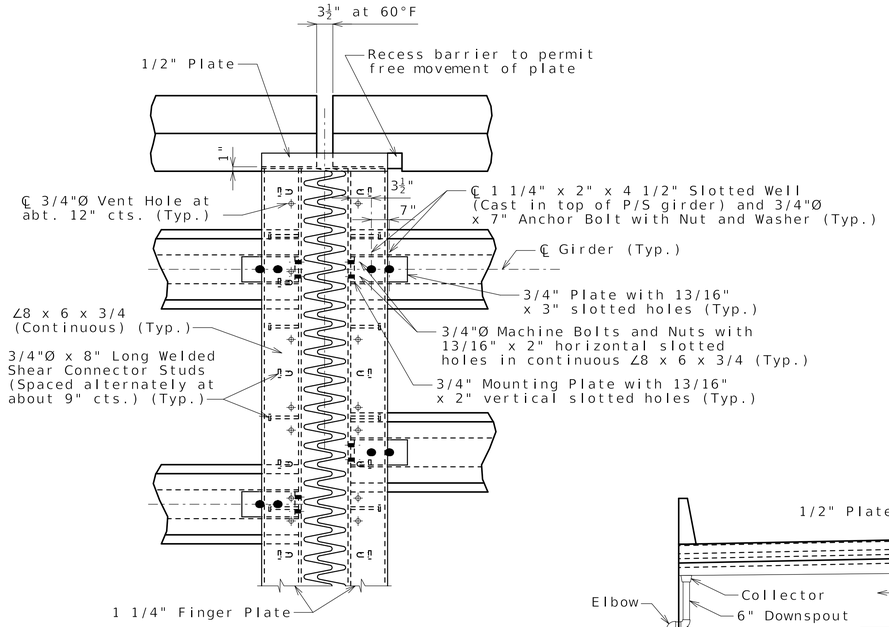

PART PLAN OF DEVICE

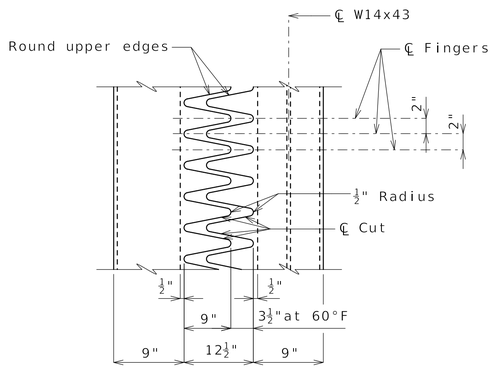

PART PLAN OF FINGER PLATE

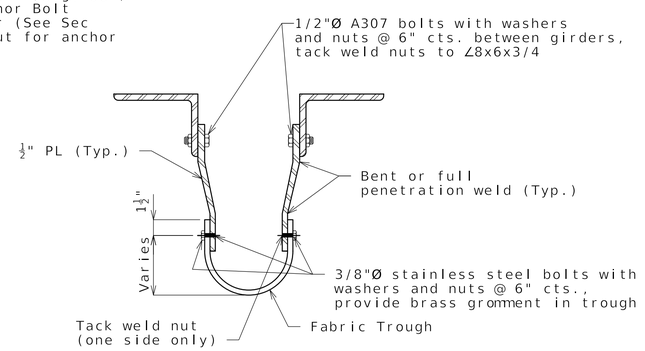

DETAIL D

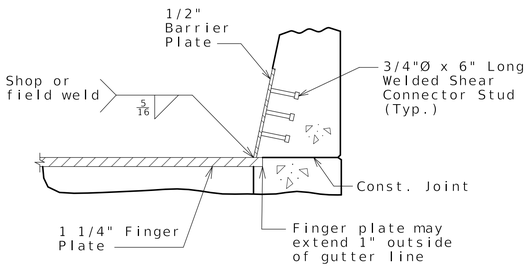

SECTION A-A

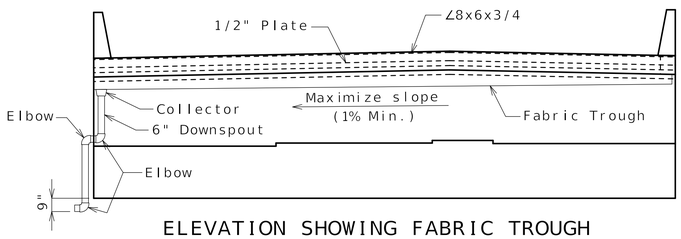

ELEVATION SHOWING FABRIC TROUGH (LOOKING UPSTATION)

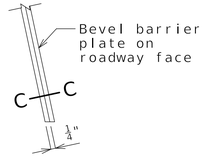

PART ELEVATION AT END OF BARRIER PLATE

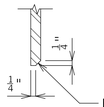

SECTION C-C

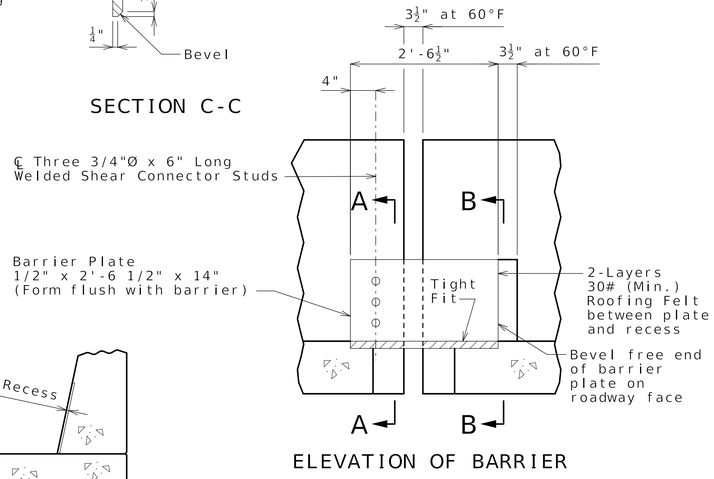

ELEVATION OF BARRIER

SECTION B-B

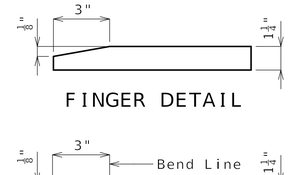

FINGER DETAIL

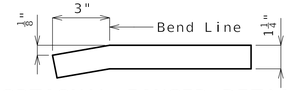

OPTIONAL FINGER DETAIL

GENERAL NOTES:

Finger plate shall be cut with a machine guided gas torch from one plate. The plate from which fingers are cut may be spliced before fingers are cut. The surface of cut shall be perpendicular to the surface of the plate. The cut shall not exceed 1/8" in width. The centerline of cut shall not deviate more than 1/16" from the position of centerline of cut shown. No splicing of finger plate or finger plate assembly will be allowed after fingers are cut. The expansion device shall be fabricated and installed to the crown and grade of the roadway.

Plan dimensions are based on installation at 60°F. The expansion gap and other dimensions shall be increased or decreased 3/8" for each 10° fall or rise in temperature at installation.

Material for the expansion device shall be ASTM A709 Grade 36 structural steel. Anchors for the expansion device shall be in accordance with Sec 1037.

Structural steel for the expansion device and barrier plate shall be coated with a minimum of two coats of inorganic zinc primer to provide a total dry film thickness of 4 mils minimum, 6 mils maximum, or galvanized in accordance with ASTM A123. Anchors need not be protected from overspray.

Longitudinal reinforcing steel shall be placed so that ends shall not be more than ±1" from the 3/4" vertical mounting plate at the expansion device.

Complete joint penetration welds utilized in the fabrication of the expansion device shall be nondestructively tested by an approved method.

Place #5-S2, #4-S3, #5-S53 and #4-S54 in between shear studs as shown. Cutting bars may be necessary for placement but should be done at a minimum. Lapping will not be required.

STATE OF MISSOURI
MARTIN ALAN THORNTON
NUMBER PE-2013006488
PROFESSIONAL ENGINEER
4-2-26

DATE PREPARED: 2-SEP-2026
ROUTE: I-70 | STATE: MO
DISTRICT: BR | SHEET NO.: BR05-29
COUNTY: BOONE
JOB NUMBER: JST0017
CONTRACT ID.: 251203-D01
PROJECT NO.: IS 70-2(128)
BRIDGE NO.: A9820

REV	DATE	DESCRIPTION
0	0904426	RFC BRIDGE A9820

IF A SEAL IS PRESENT ON THIS SHEET IT HAS BEEN ELECTRONICALLY SEALED AND DATED.

MISSOURI HIGHWAYS AND TRANSPORTATION COMMISSION
105 WEST CAPITOL
JEFFERSON CITY, MO 65102
1-888-ASK-MODOT (1-888-275-6636)

IMPROVE I-70 ROCHEPORT TO COLUMBIA

EMERY SAPP & SONS, INC

HORNER SHIFRIN
HORNER & SHIFRIN, INC.
TIM PHELPS, P.E. - MANAGING PRINCIPAL
401 S. 18th St., Ste. 300
ST. LOUIS, MO 63103
314-531-1420 FAX: 314-531-0966
www.HornerShifrin.com

MO STATE CERTIFICATE OF AUTHORITY #000159 ENGINEERING

REV. RevDesc

FINGER PLATE JOINT AT INTERMEDIATE BENT NO. 4

Designed SR MAY 2026
Detailed SLF MAY 2026
Checked TPL JUL 2026

Note: This drawing is not to scale. Follow dimensions.

B_JST0017_A9820_29_Finger Plate Joint.dgn 1:03:26 AM Eastern 2-SEP-2026

09/08/2026
Released for Construction

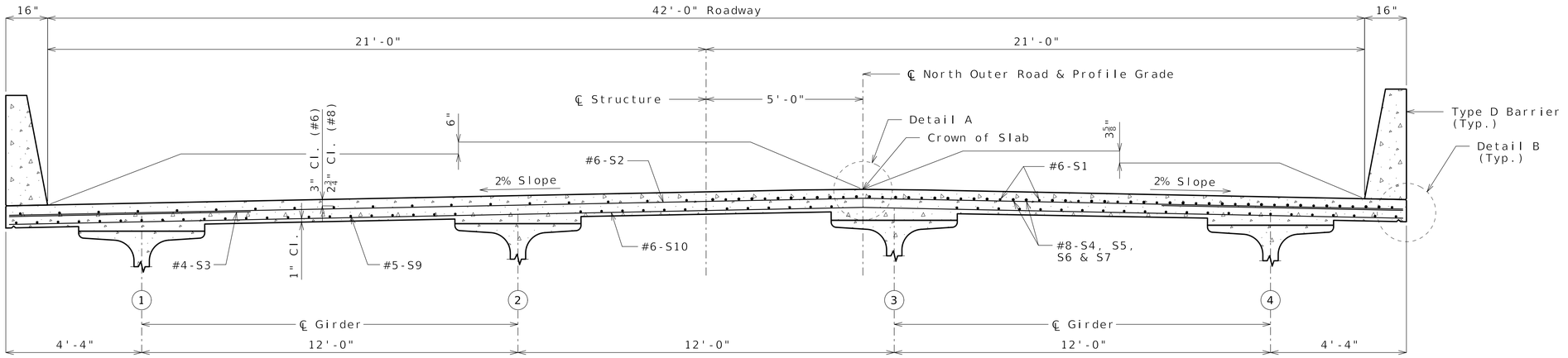

HALF SECTION NEAR MIDSPAN

HALF SECTION NEAR INTERMEDIATE BENT

SECTION THRU SLAB-UNIT 1

Notes:

For reinforcement of barrier not shown, see Sheet No. 33.

For Theoretical Bottom of Slab Elevations, Girder Camber Diagram and Theoretical Slab Haunching Diagram, see Sheet No. 27.

For Plan of Slab Showing Reinforcement, see Sheets No. 31 & 32.

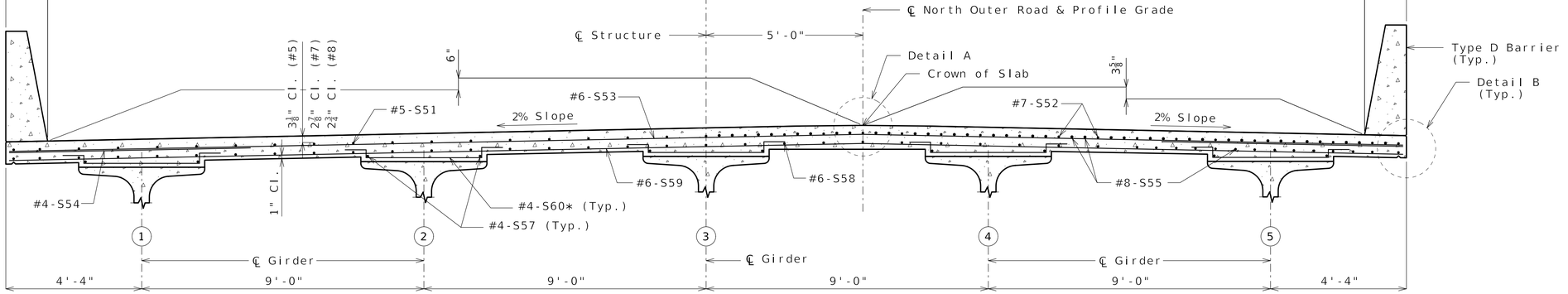

HALF SECTION NEAR MIDSPAN

HALF SECTION NEAR INTERMEDIATE BENT

SECTION THRU SLAB-UNIT 2

* #4-S60 Hairpin bars may be placed at an angle to meet clearances.

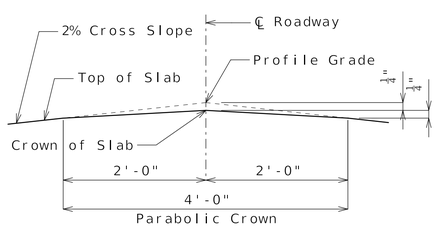

DETAIL A

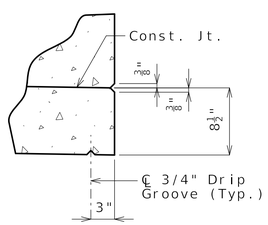

DETAIL B

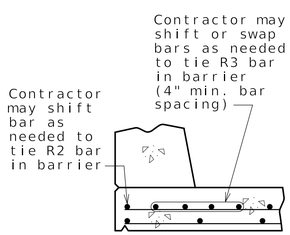

OPTIONAL SHIFTING TOP BARS AT BARRIER

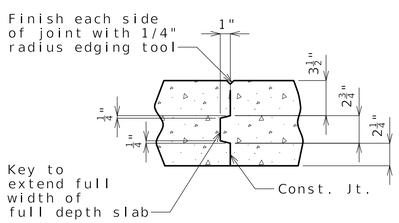

SLAB CONSTRUCTION JOINT

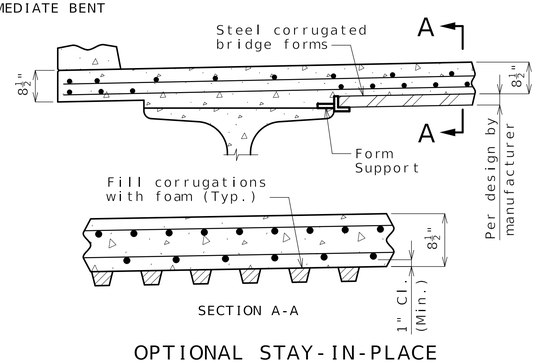

SECTION A-A

OPTIONAL STAY-IN-PLACE FORM DETAILS

Note: See Sheet No. 2 for notes about stay-in-place forms

SLAB SECTION AND DETAILS

Designed CMR JUL 2026
Detailed CAB JUL 2026
Checked CMR JUL 2026

Note: This drawing is not to scale. Follow dimensions.

STATE OF MISSOURI
MARTIN ALAN THORNE
NUMBER PE-2013006488
PROFESSIONAL ENGINEER
4-2-26

DATE PREPARED
2-SEP-2026

ROUTE	STATE
I-70	MO
DISTRICT	SHEET NO.
BR	BR05-30

COUNTY
BOONE

JOB NUMBER
JST0017

CONTRACT ID.
251203-D01

PROJECT NO.
IS 70-2(128)

BRIDGE NO.
A9820

REV	DATE	DESCRIPTION
0	090426	RFC BRIDGE A9820

IF A SEAL IS PRESENT ON THIS SHEET IT HAS BEEN ELECTRONICALLY SEALED AND DATED.

MISSOURI HIGHWAYS AND TRANSPORTATION COMMISSION

105 WEST CAPITOL
JEFFERSON CITY, MO 65102
1-888-ASK-MODOT (1-888-275-6636)

IMPROVE I-70 ROCHEPORT TO COLUMBIA

MO STATE CERTIFICATE OF AUTHORITY #000159 ENGINEERING

EMERY SAPPS SONS, INC

HORNER SHIFRIN
THE POWER OF EXPERIENCE AND INNOVATION
801 CHESTNUT, SUITE 1000
ST. LOUIS, MISSOURI 63101
314-231-1321 FAX: 314-231-4966
www.hornershifrin.com

REV. RevDesc

09/08/2026
Released for Construction

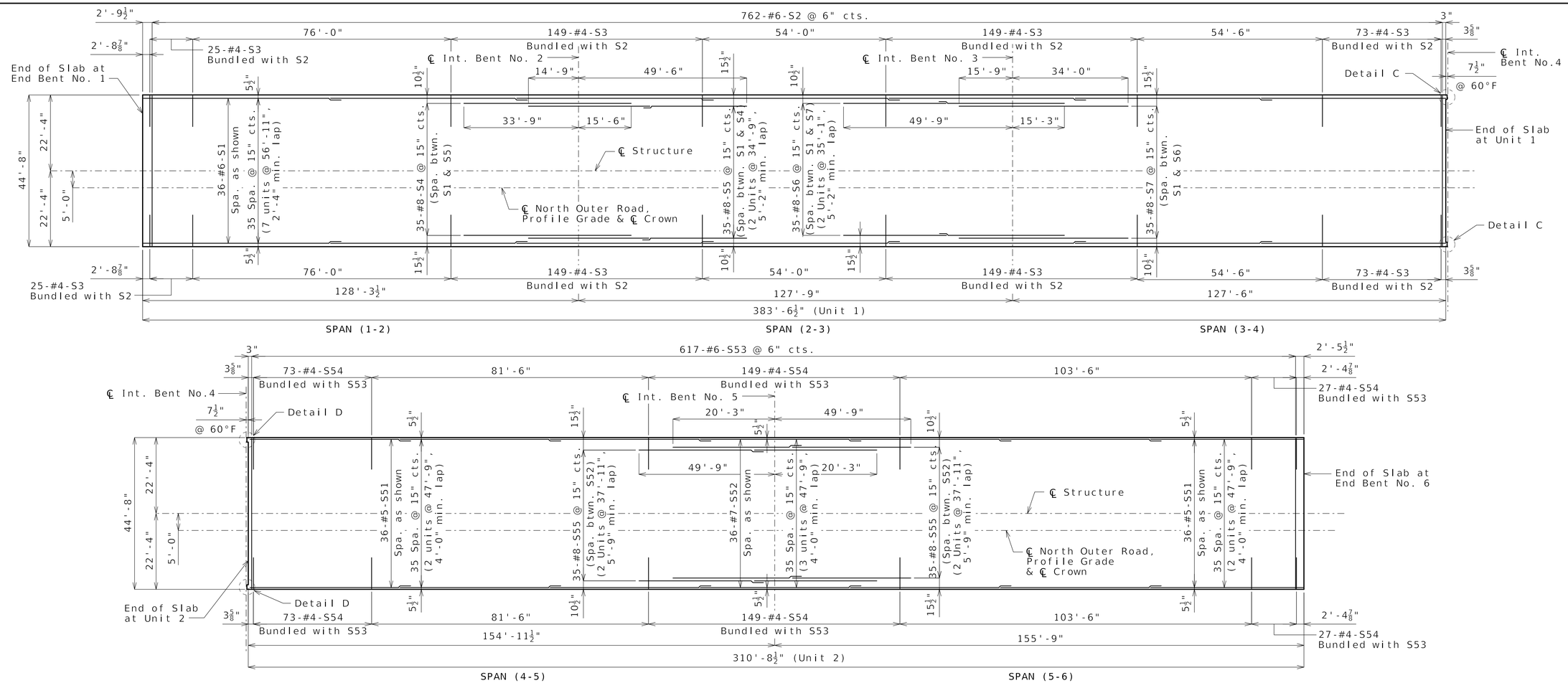

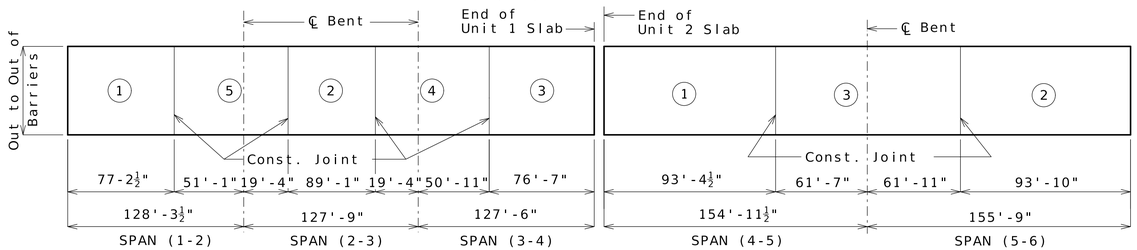

General Notes:

Work this sheet with Sheets No. 30 & 32.

Longitudinal slab dimensions are measured horizontally.

For Details and Reinforcement of Barriers not shown, see Sheet No. 33.

For Theoretical Slab Haunching Diagram and Theoretical Bottom of Slab Elevations, see Sheet No. 27.

For details and locations of slab drains, see Sheet No. 28.

	Sequence of Pours					Min. Rate of Pour Cu. Yds./Hr.
	Direction					With Retarder
Basic Sequence	1	2	3	4	5	25
	1 to 5					
Alternate pours to the basic skip sequence are subject to the approval of the engineer in accordance with Sec 703.						
Alternate A Pours	1	5 + 2		4 + 3		45
	End to 5	1 to 4		2 to End		
Alternate B Pours	1 + 5 + 2		4 + 3			45
	End to 4		2 to End			
Alternate C Pours	1 + 5 + 2 + 4 + 3					45
	End to End					

	Sequence of Pours			Min. Rate of Pour Cu. Yds./Hr.
	Direction			With Retarder
Basic Sequence	1	2	3	25
	1 to 3			
Alternate pours to the basic skip sequence are subject to the approval of the engineer in accordance with Sec 703.				
Alternate A Pours	1	3 + 2		76
	End to 3	1 to End		
Alternate B Pours	1 + 3 + 2			76
	End to End			

Slab Pouring Sequence Notes:

The contractor shall furnish an approved retarder to retard the set of the concrete to 2.5 hours, and shall pour and satisfactorily finish the slab pours at the rate given.

The concrete diaphragm at the intermediate bents and integral end bents shall be poured a minimum of 30 minutes and a maximum of 2 hours before the slab is poured.

End diaphragms at expansion devices may be poured with a construction joint between the diaphragm and slab, or monolithic with the slab.

SLAB POURING SEQUENCE

PLAN OF SLAB SHOWING TOP REINFORCEMENT

Designed CMR JUL 2026
Detailed CAB JUL 2026
Checked CMR JUL 2026

Note: This drawing is not to scale. Follow dimensions.

STATE OF MISSOURI
MARTIN ALAN THORIN
NUMBER PE-2013006488
PROFESSIONAL ENGINEER
4-SEP-2026

DATE PREPARED: 2-SEP-2026
ROUTE: I-70 | STATE: MO
DISTRICT: BR | SHEET NO.: BR05-31
COUNTY: BOONE
JOB NUMBER: JST0017
CONTRACT ID.: 251203-D01
PROJECT NO.: IS 70-2(128)
BRIDGE NO.: A9820

REV	DATE	DESCRIPTION
0	090426	RFC BRIDGE A9820

IF A SEAL IS PRESENT ON THIS SHEET IT HAS BEEN ELECTRONICALLY SEALED AND DATED.

MISSOURI HIGHWAYS AND TRANSPORTATION COMMISSION
105 WEST CAPITOL
JEFFERSON CITY, MO 65102
1-888-ASK-MODOT (1-888-275-6636)

IMPROVE I-70 ROCHEPORT TO COLUMBIA

MO STATE CERTIFICATE OF AUTHORITY #000159 ENGINEERING

EMERY SAPPS& SONS, INC
HORNER SHIFRIN
THE HORNER & SHIFRIN GROUP OF COMPANIES
801 S. 18th St., Ste. 400
St. Louis, Missouri 63103
314-231-1021 FAX: 314-231-6866
www.hornershifrin.com

REV. RevDesc

09/08/2026
Released for Construction

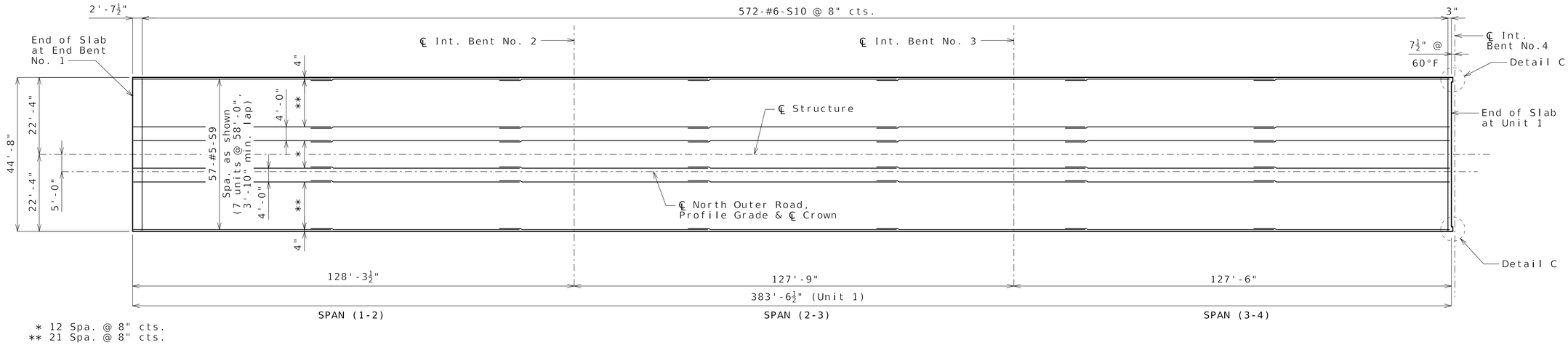

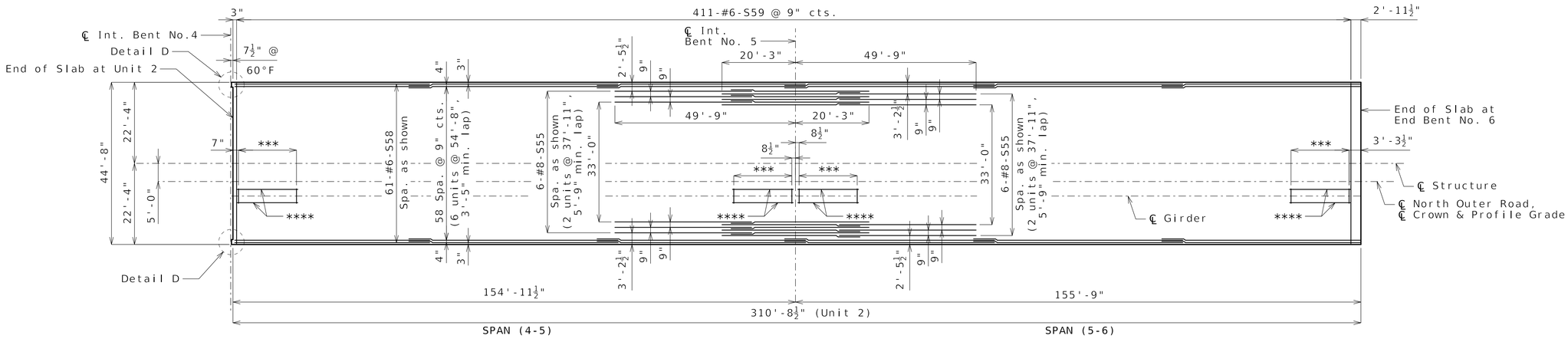

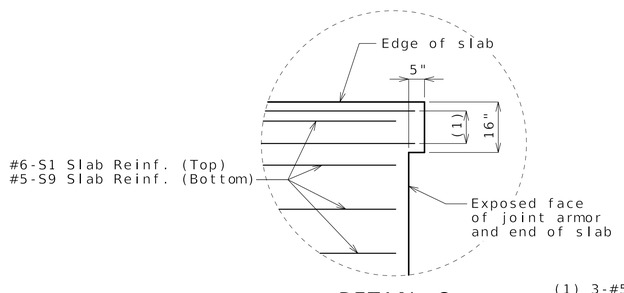

DETAIL C

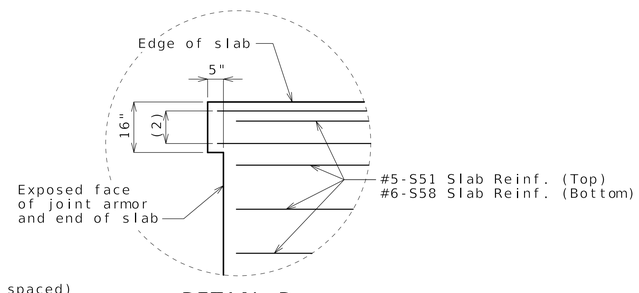

DETAIL D

(1) 3-#5-S8 (Equally spaced) (Top and bottom)

(2) 3-#5-S56 (Equally spaced) (Top and bottom)

Notes:

Work this sheet with Sheets No. 30 & 31.

Longitudinal slab dimensions are measured horizontally.

For Details and Reinforcement of Barriers not shown, see Sheet No. 33.

For Theoretical Slab Haunching Diagram and Theoretical Bottom of Slab Elevations, see Sheet No. 27.

For details and locations of slab drains, see Sheet No. 28.

PLAN OF SLAB SHOWING BOTTOM REINFORCEMENT

Designed CMR JUL 2026
Detailed CAB JUL 2026
Checked CMR JUL 2026

Note: This drawing is not to scale. Follow dimensions.

STATE OF MISSOURI
MARTIN ALAN THORNE
NUMBER PE-2013006488
PROFESSIONAL ENGINEER
4-SEP-2026

DATE PREPARED: 2-SEP-2026
ROUTE: I-70
STATE: MO
DISTRICT: BR
SHEET NO.: BR05-32
COUNTY: BOONE
JOB NUMBER: JST0017
CONTRACT ID.: 251203-D01
PROJECT NO.: IS 70-2(128)
BRIDGE NO.: A9820

REV	DATE	DESCRIPTION
0	090426	RFC BRIDGE A9820

IF A SEAL IS PRESENT ON THIS SHEET IT HAS BEEN ELECTRONICALLY SEALED AND DATED.

MISSOURI HIGHWAYS AND TRANSPORTATION COMMISSION

105 WEST CAPITOL
JEFFERSON CITY, MO 65102
1-888-ASK-MODOT (1-888-275-6636)

IMPROVE I-70 ROCHEPORT TO COLUMBIA

HORNER SHIFRIN
Horner & Shifrin, Inc. (MO Firm #000304)
401 S. 18th St., Ste. 300
St. Louis, MO 63103-2759
314-531-1420 FAX: 314-531-0966
www.HornerShifrin.com

EMERY SAPP & SONS, INC

MO STATE CERTIFICATE OF AUTHORITY #000159 ENGINEERING

REV. RevDesc

09/08/2026
Released for Construction

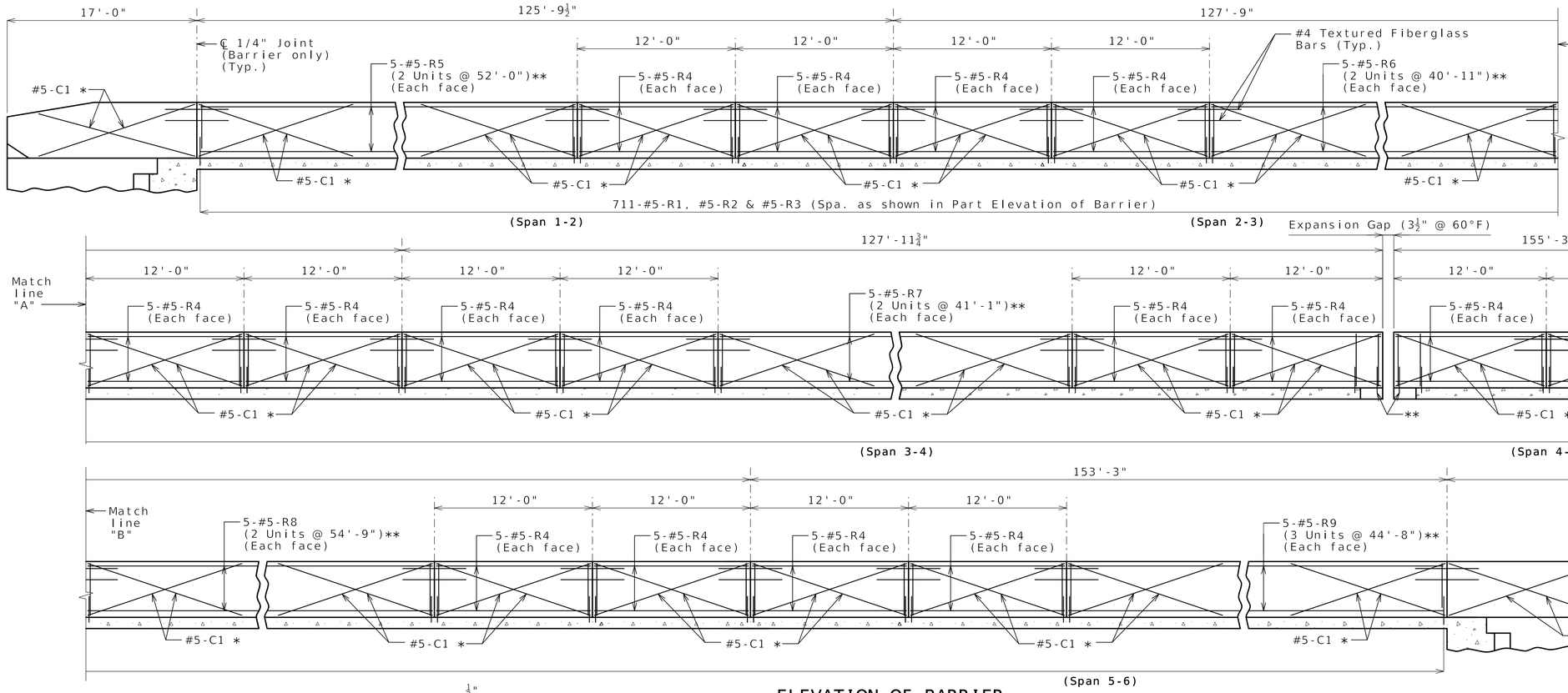

ELEVATION OF BARRIER

(Left barrier shown, right barrier similar)
Longitudinal dimensions are horizontal.

** 2'-6" Min. Lap Splice (Typ.)

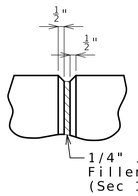

PART ELEVATION AT FORMED JOINT

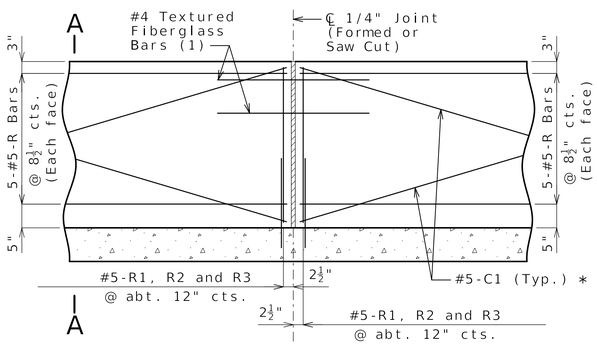

PART ELEVATION OF BARRIER

(1) Four feet long, centered on joint, slip-formed option only

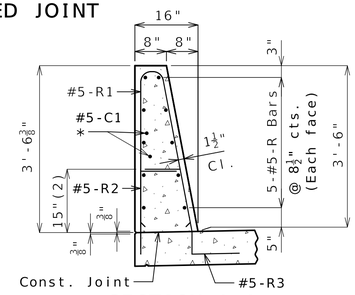

SECTION A-A

Use a minimum lap of 2'-6" for #5 horizontal barrier bars.

The cross-sectional area above the slab is 3.52 square feet.

(2) To top of bar

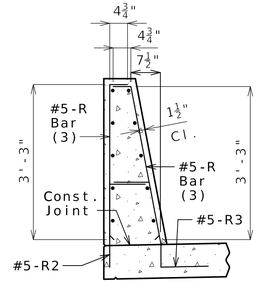

R-BAR PERMISSIBLE ALTERNATE SHAPE

(3) The R1 bar may be separated into two bars as shown, at the contractor's option, only when slip forming is not used. (All dimensions are out to out.)

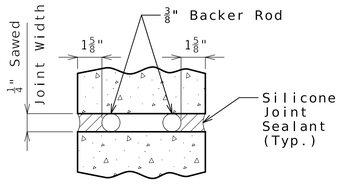

SECTION B-B

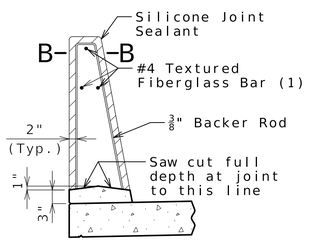

SECTION THRU SAW CUT JOINT

General Notes:

* Slip-formed option only.

** Field cut bottom leg of #5-R3 bars at expansion joint.

Conventional forming or slip forming may be used. Saw cut joints may be used with conventional forming.

Top of barrier shall be built parallel to grade and barrier joints (except at end bents) normal to grade.

All exposed edges of barrier shall have either a 1/2-inch radius or a 3/8-inch bevel, unless otherwise noted.

Concrete in barrier shall be Class B-1.

Concrete traffic barrier delineators shall be placed on top of the barrier as shown on Missouri Standard Plan 617.10 and in accordance with Sec 617. Delineators on bridges with two-lane, two-way traffic shall have retroreflective sheeting on both sides.

Joint sealant and backer rods shall be in accordance with Sec 717 for silicone joint sealant for saw cut and formed joints.

For slip-formed option, both sides of barrier shall have a vertically broomed finish and the top shall have a transversely broomed finish.

For details of finger plate expansion joints, see Sheet No. 29.

TYPE D BARRIER DETAILS

Designed MAC JUL 2026
Detailed SLF APR 2026
Checked TPL JUL 2026

Note: This drawing is not to scale. Follow dimensions.

STATE OF MISSOURI
MARTIN ALAN THORNE
NUMBER PE-2013006488
PROFESSIONAL ENGINEER
4-2-26

DATE PREPARED: 2-SEP-2026
ROUTE: I-70 | STATE: MO
DISTRICT: BR | SHEET NO.: BR05-33
COUNTY: BOONE
JOB NUMBER: JST0017
CONTRACT ID.: 251203-D01
PROJECT NO.: IS 70-2(128)
BRIDGE NO.: A9820

REV	DATE	DESCRIPTION
0	090426	RFC BRIDGE A9820

IF A SEAL IS PRESENT ON THIS SHEET IT HAS BEEN ELECTRONICALLY SEALED AND DATED.

MISSOURI HIGHWAYS AND TRANSPORTATION COMMISSION
105 WEST CAPITOL
JEFFERSON CITY, MO 65102
1-888-ASK-MODOT (1-888-275-6636)

IMPROVE I-70 ROCHEPORT TO COLUMBIA

MO STATE CERTIFICATE OF AUTHORITY #000159 ENGINEERING

HORNER SHIFRIN
THE HORNER SHIFRIN GROUP, INC.
801 S. 18th St., Ste. 400
St. Louis, MO 63103
314-231-1021 FAX: 314-231-4866
www.hornershifrin.com

EMERY SAPP& SONS, INC

REV. RevDesc

09/08/2026
Released for Construction

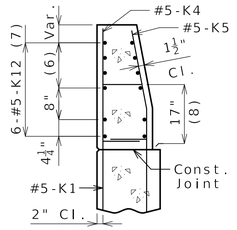

SECTION A-A

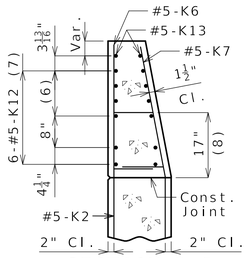

SECTION B-B

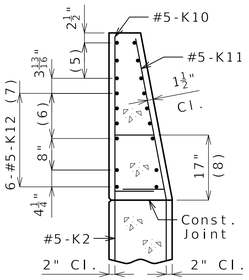

SECTION C-C

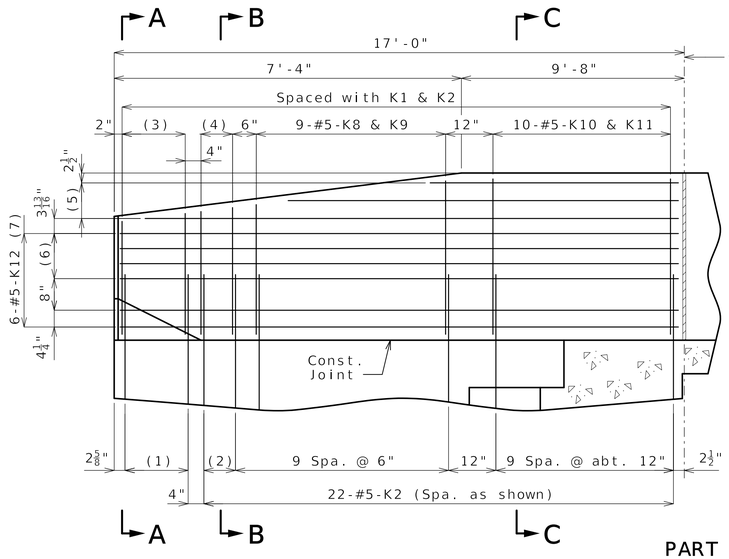

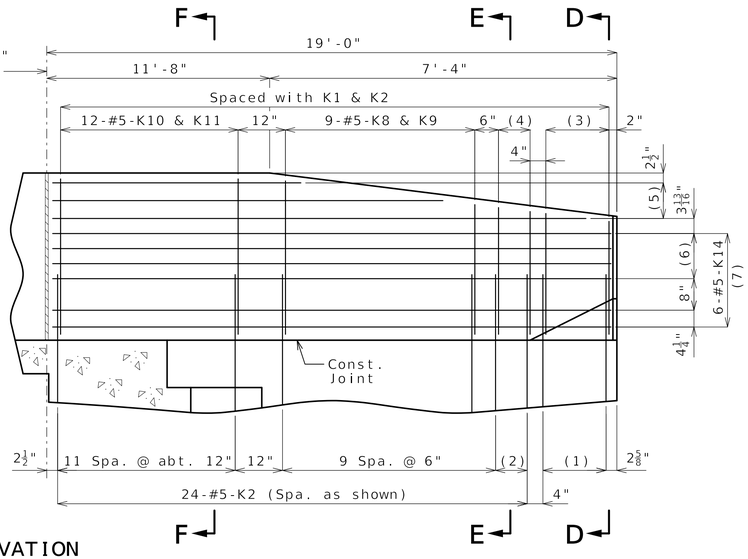

PART ELEVATION

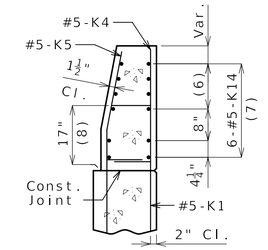

SECTION D-D

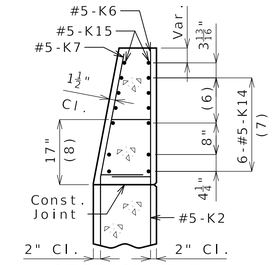

SECTION E-E

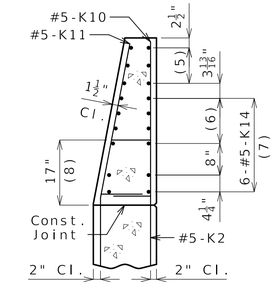

SECTION F-F

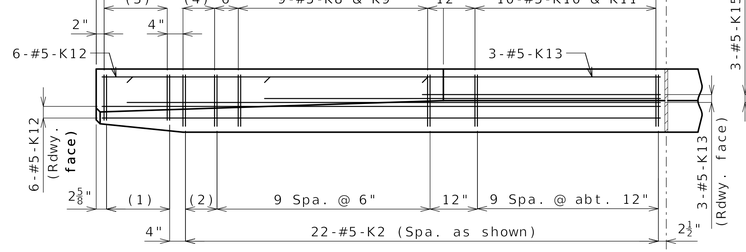

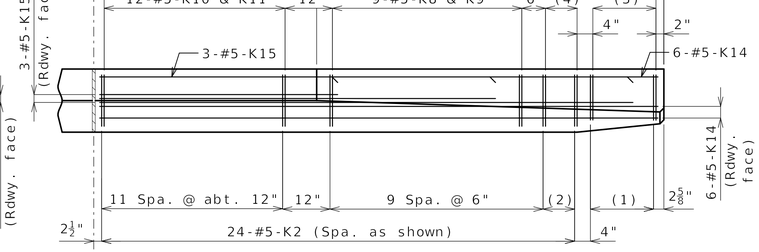

PART PLAN

(1) 5-#5-K1 @ 4" cts.

(2) 2 spaces @ 4"

(3) 5-#5-K4 & K5

(4) 3-#5-K6 & K7

(5) 3-#5-K13 or K15 @ 4½" cts., each face

(6) 3 spaces @ 3 13/16"

(7) Spaced as shown, each face

(8) To top of bar

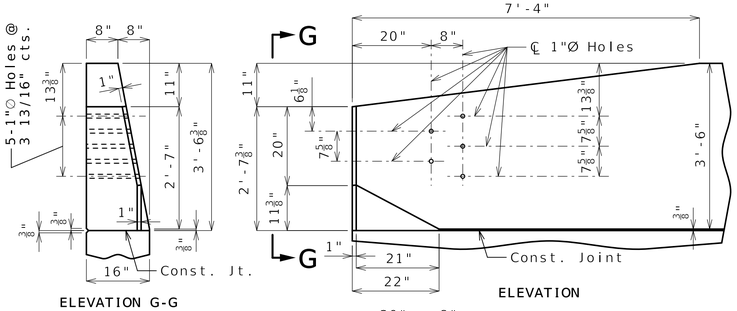

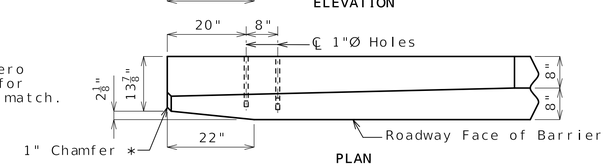

* Transition to zero at Type A curb for gutter lines to match.

DETAILS OF GUARD RAIL ATTACHMENT

General Notes:

Concrete traffic barrier delineators shall be placed on top of the barrier as shown on Missouri Standard Plan 617.10 and in accordance with Sec 617. Delineators on bridges with two-lane, two-way traffic shall have retroreflective sheeting on both sides.

Reinforcing Steel:

Minimum clearance to reinforcing steel shall be 1 1/2" except as shown for bars embedded into end bent.

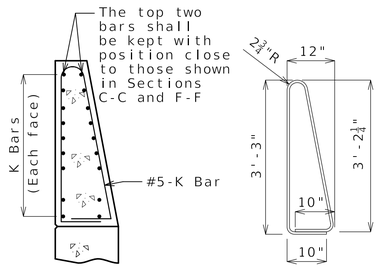

K10-K11 BAR PERMISSIBLE ALTERNATE SHAPE

(Other K bars not shown for clarity)

The K10-K11 bar combination may be furnished as one bar as shown, at the contractor's option.

All dimensions are out to out.

TYPE D BARRIER AT END BENTS

(Left Barrier shown, Right Barrier similar)

Designed MAC APR 2026
Detailed SLF APR 2026
Checked TPL JUL 2026

Note: This drawing is not to scale. Follow dimensions.

STATE OF MISSOURI
MARTIN ALAN THORNE
NUMBER PE-2013006488
PROFESSIONAL ENGINEER
4-1-2026

DATE PREPARED
2-SEP-2026

ROUTE	STATE
I-70	MO
DISTRICT	SHEET NO.
BR	BR05-34

COUNTY
BOONE

JOB NUMBER
JST0017

CONTRACT ID.
251203-D01

PROJECT NO.
IS 70-2(128)

BRIDGE NO.
A9820

REV	DATE	DESCRIPTION
0	090426	RFC BRIDGE A9820

IF A SEAL IS PRESENT ON THIS SHEET IT HAS BEEN ELECTRONICALLY SEALED AND DATED.

MISSOURI HIGHWAYS AND TRANSPORTATION COMMISSION
105 WEST CAPITOL
JEFFERSON CITY, MO 65102
1-888-ASK-MODOT (1-888-275-6636)

IMPROVE I-70 ROCHEPORT TO COLUMBIA

MO STATE CERTIFICATE OF AUTHORITY #000159 ENGINEERING

EMERY SAPPS SONS, INC

HORNER SHIFRIN
THE POWER OF BEING UNDERSTOOD
401 S. 18th St., Ste. 400
St. Louis, MO 63103-2709
314-531-4321 FAX: 314-531-8966
www.HornerShifrin.com

REV. RevDesc

09/08/2026
Released for Construction

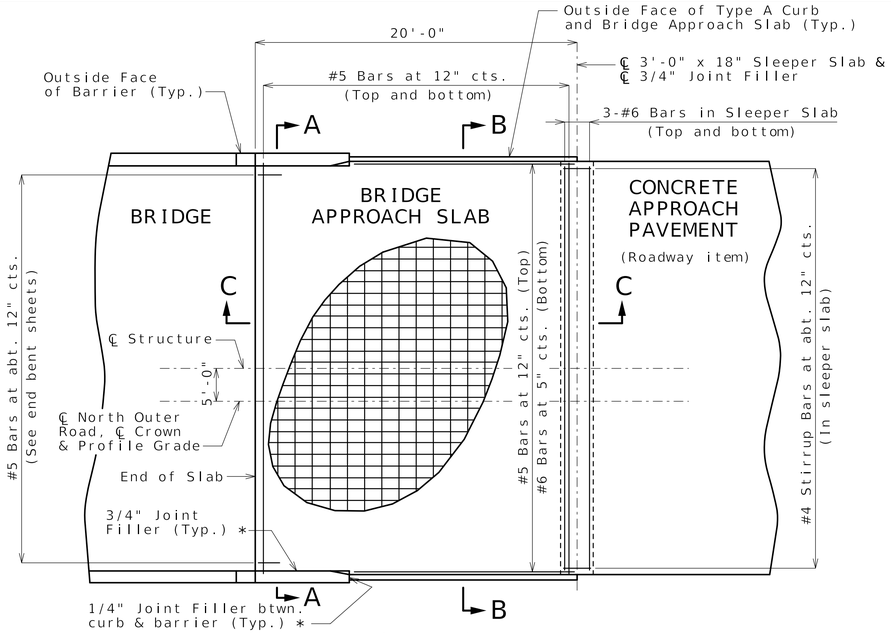

PART PLAN SHOWING REINFORCEMENT

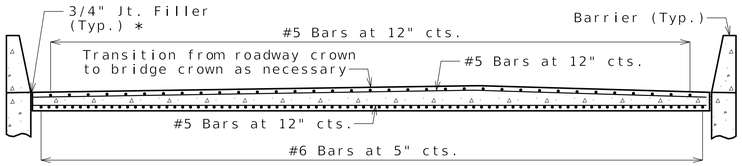

SECTION A-A

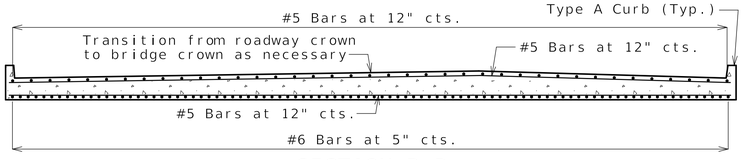

SECTION B-B

With the approval of the engineer, the contractor may crown the bottom of the approach slab to match the crown of the roadway surface.

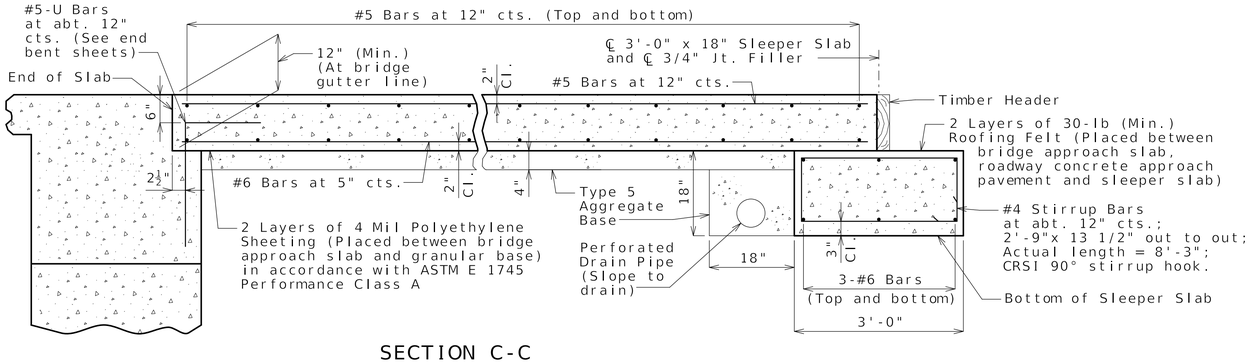

SECTION C-C

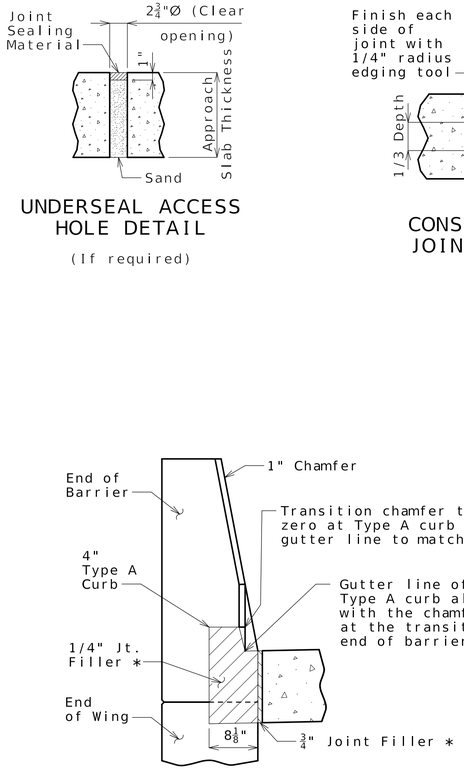

UNDERSEAL ACCESS HOLE DETAIL

(If required)

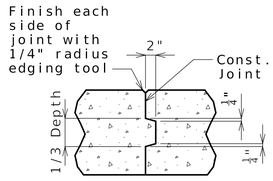

CONSTRUCTION JOINT DETAIL

SECTION BETWEEN CURB AND BARRIER

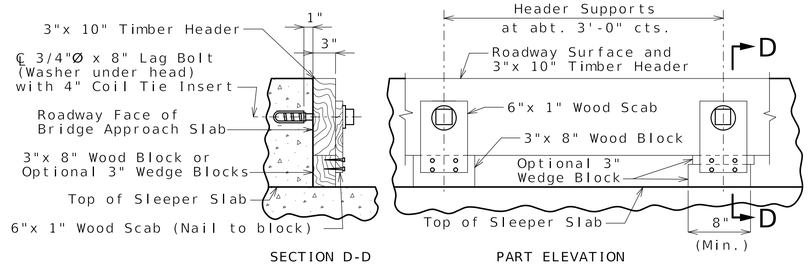

SECTION D-D PART ELEVATION

DETAILS OF TIMBER HEADER

Remove timber header when concrete pavement is placed.

General Notes:

All concrete for the bridge approach slab and sleeper slab shall be in accordance with Sec 503 (f'c = 4,000 psi).

The reinforcing steel in the bridge approach slab and the sleeper slab shall be epoxy coated Grade 60 with fy = 60,000 psi.

Drain pipe may be either 6" diameter corrugated metallic-coated pipe underdrain, 4" diameter corrugated polyvinyl chloride (PVC) drain pipe, or 4" diameter corrugated polyethylene (PE) drain pipe.

Minimum clearance to reinforcing steel shall be 1 1/2", unless otherwise shown.

The reinforcing steel in the bridge approach slab and the sleeper slab shall be continuous. The transverse reinforcing steel may be made continuous by providing a minimum lap splice of 24 inches for #5 bars and 40 inches for #6 bars, or by mechanical bar splice.

All joint filler shall be in accordance with Sec 1057 for preformed fiber expansion joint filler except as noted.

The contractor shall pour and satisfactorily finish the bridge slab before placing the bridge approach slab.

For concrete approach pavement details, see roadway plans.

See Missouri Standard Plan 609.00 for details of Type A curb.

* Seal joint between vertical face of approach slab and wing with sealant in accordance with Sec 717 for silicone joint sealant for saw cut and formed joints.

STATE OF MISSOURI
MARTIN ALAN THORIUS
NUMBER PE-2013006488
PROFESSIONAL ENGINEER
4-2-26

DATE PREPARED: 2-SEP-2026
ROUTE: I-70 | STATE: MO
DISTRICT: BR | SHEET NO.: BR05-35
COUNTY: BOONE
JOB NUMBER: JST0017
CONTRACT ID.: 251203-D01
PROJECT NO.: IS 70-2(128)
BRIDGE NO.: A9820

REV	DATE	DESCRIPTION
0	090426	RFC BRIDGE A9820

IF A SEAL IS PRESENT ON THIS SHEET IT HAS BEEN ELECTRONICALLY SEALED AND DATED.

MISSOURI HIGHWAYS AND TRANSPORTATION COMMISSION
105 WEST CAPITOL
JEFFERSON CITY, MO 65102
1-888-ASK-MODOT (1-888-275-6636)

IMPROVE I-70 ROCHEPORT TO COLUMBIA

EMERY SAPP & SONS, INC

HORNER SHIFRIN
ENGINEERS ARCHITECTS PLANNERS
401 S. 18th St., Ste. 300
St. Louis, MO 63103
314-531-1420 FAX: 314-531-0966
www.HornerShifrin.com

MO STATE CERTIFICATE OF AUTHORITY #000159 ENGINEERING

REV. RevDesc

Designed MAC JUL 2026
Detailed SLF JUL 2026
Checked TPL JUL 2026

Note: This drawing is not to scale. Follow dimensions.

BRIDGE APPROACH SLAB (MAJOR)

09/08/2026
Released for Construction

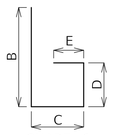

SHAPE 6
or 6S

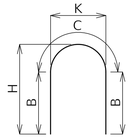

SHAPE 7

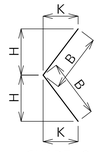

SHAPE 8
or 8S

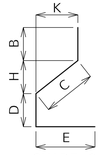

SHAPE 9
or 9S

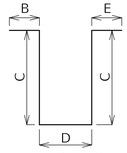

SHAPE 10
or 10S

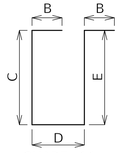

SHAPE 11
or 11S

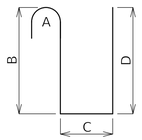

SHAPE 12

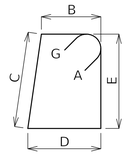

SHAPE 13S

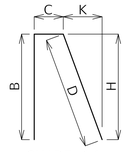

SHAPE 14
or 14S

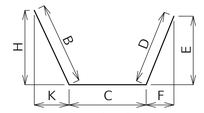

SHAPE 15
or 15S

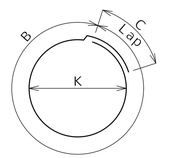

SHAPE 16

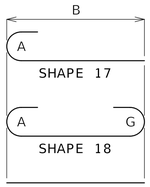

SHAPE 17
SHAPE 18
SHAPE 20

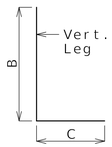

SHAPE 19
or 19S

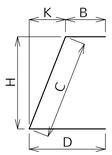

SHAPE 21
or 21S

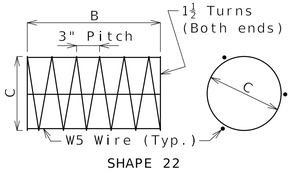

SHAPE 22

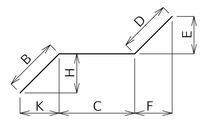

SHAPE 23
or 23S

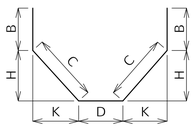

SHAPE 24
or 24S

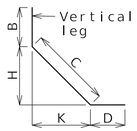

SHAPE 25
or 25S

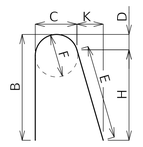

SHAPE 26

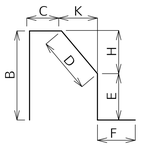

SHAPE 27S

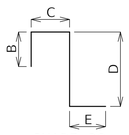

SHAPE 28
or 28S

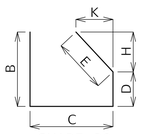

SHAPE 29
or 29S

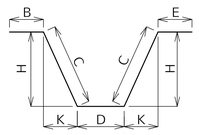

SHAPE 30
or 30S

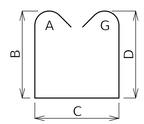

SHAPE 31S

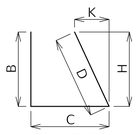

SHAPE 32
or 32S

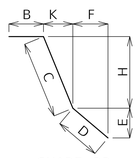

SHAPE 33
or 33S

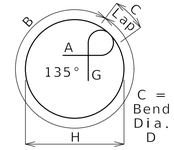

SHAPE 34S

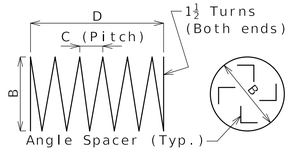

SHAPE 35 (1)

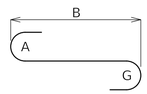

SHAPE 36

Finished Bend Diameters D and Hook Dimensions

Standard Pin Bend Shapes

Size	Case	D	A or G		J
			90°	180°	180°
#4	1	3"	8"	6"	4"
#5	1	3¾"	10"	7"	5"
#6	1	4½"	12"	8¼"	6"
#7	2	5¼"	14"	9¾"	7"
	3	7"	15"	11½"	8¾"
#8	2	6"	16"	11"	8"
	3	8"	17"	13¼"	10"
#9	1	9½"	19½"	15½"	11¾"
#10	1	10¾"	22"	17½"	13¼"
#11	1	12"	24½"	19½"	14⅞"
#14	1	18¼"	31¼"	27½"	21⅜"
#18	1	24"	41½"	36¼"	28½"

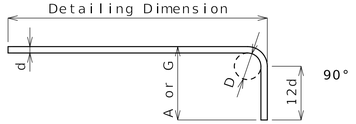

Stirrup Pin Bend Shapes (S)

Size	Case	D	A or G			H	J
			90°	135°	180°	135°	180°
#4	2	2"	4½"	4½"	5"	2⅝"	3"
	3	3"	5"	5¼"	6"	3"	4"
#5	2	2½"	5¾"	5¾"	5¾"	3⅝"	3¾"
	3	3¾"	6¼"	6½"	7"	3⅞"	5"
#6	1	4½"	12"	7¾"	8¼"	4⅝"	6"

Applicable for all grades of steel.

Case 1 applies to all reinforcement. Case 2 applies to all reinforcement except for galvanized bars. Case 3 applies to galvanized bars only.

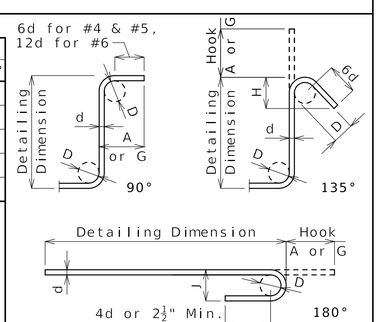

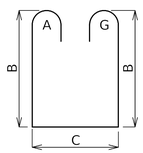

SHAPE 37S

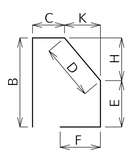

SHAPE 38S

BENDING DIAGRAMS

All dimensions are out to out.

Shapes ending with an S shall be bent in accordance with stirrup pin bend shapes.

Unless otherwise noted, finished bending diameter D is the same for all bends of a shape.

(1) Shall be a deformed or plain spiral bar or wire.

Four angle or channel spacers are required for each column spiral. Spacers are to be placed on inside of spirals. Length and weight of column spirals do not include splices or spacers.

BENDING DIAGRAMS

Designed MAC JUL 2026
Detailed SLF JUL 2026
Checked CMR AUG 2026

Note: This drawing is not to scale. Follow dimensions.

STATE OF MISSOURI
MARTIN ALAN THORNE
NUMBER PE-2013006488
PROFESSIONAL ENGINEER
4-SEP-2026

DATE PREPARED 2-SEP-2026
ROUTE I-70 | STATE MO
DISTRICT BR | SHEET NO. BR05-36
COUNTY BOONE
JOB NUMBER JST0017
CONTRACT ID. 251203-D01
PROJECT NO. IS 70-2(128)
BRIDGE NO. A9820

REV	DATE	DESCRIPTION
0	090426	RFC BRIDGE A9820

IF A SEAL IS PRESENT ON THIS SHEET IT HAS BEEN ELECTRONICALLY SEALED AND DATED.

MISSOURI HIGHWAYS AND TRANSPORTATION COMMISSION
105 WEST CAPITOL
JEFFERSON CITY, MO 65102
1-888-ASK-MODOT (1-888-275-6636)

IMPROVE I-70 ROCHEPORT TO COLUMBIA

HORNER SHIFRIN
HORNER & SHIFRIN, INC.
ENGINEERS | PLANNERS | SURVEYORS
401 S. 18th St., Ste. 100
St. Louis, MO 63103-2759
314-531-4321 FAX: 314-531-6966
www.hornershifrin.com

EMERY SAPP & SONS, INC

MO STATE CERTIFICATE OF AUTHORITY #000159 ENGINEERING

REV. RevDesc

B_JST0017_A9820_36_BarBill Diagrams Total.dgn 1:02:59 AM Eastern 2-SEP-2026

09/08/2026
Released for Construction

Bill of Reinforcing Steel

No. Req.	Size/ Mark	Location	Codes C	Codes SH	Codes V	Dimensions B	C	D	E	F	H	K	Nom. Length	Actual Length	Weight
						ft in.	ft in.	ft in.	ft in.	ft in.	ft in.	ft in.	ft in.	ft in.	lb
		SUBSTRUCTURE													
		INT. BENT NO. 2													
24	6 D200	DOWEL		20		2 6.000							2 6	2 6	90
6	7 H200	BEAM		18		40 3.000							41 11	41 11	514
6	7 H201	BEAM		18		9 8.000							11 4	11 4	139
6	6 H202	BEAM		20		40 3.000							40 3	40 3	363
10	6 H203	BEAM		10S			1 0.000	3 7.500					5 8	5 4	80
6	7 H204	BEAM		17		29 1.000							29 11	29 11	367
6	7 H205	BEAM		17		16 4.000							17 2	17 2	211
40	4 P200	CECIP		34S							1 7.500		5 10	5 9	154
18	5 U200	BEAM		13S		3 9.000	3 9.000	3 9.000	3 9.000				16 0	15 8	294
11	5 U201	BEAM		13S		3 9.000	3 11.250	3 9.000	3 11.250				16 4	16 0	184
6	5 U202	BEAM		10S			3 9.000	3 9.000					11 3	11 0	69
6	5 U203	BEAM		10S			3 11.250	3 9.000					11 8	11 5	71
16	4 U204	BEAM		10S			0 6.000	3 9.000					4 9	4 7	49
48	6 V200	CECIP		17		7 3.000							7 11	7 11	571
		INT. BENT NO. 3													
24	6 D300	DOWEL		20		2 6.000							2 6	2 6	90
6	7 H300	BEAM		18		40 3.000							41 11	41 11	514
6	7 H301	BEAM		18		9 8.000							11 4	11 4	139
6	6 H302	BEAM		20		40 3.000							40 3	40 3	363
10	6 H303	BEAM		10S			1 0.000	3 7.500					5 8	5 4	80
6	7 H304	BEAM		17		29 1.000							29 11	29 11	367
6	7 H305	BEAM		17		16 4.000							17 2	17 2	211
40	4 P300	CECIP		34S							1 7.500		5 10	5 9	154
18	5 U300	BEAM		13S		3 9.000	3 9.000	3 9.000	3 9.000				16 0	15 8	294
11	5 U301	BEAM		13S		3 9.000	3 11.250	3 9.000	3 11.250				16 4	16 0	184
6	5 U302	BEAM		10S			3 9.000	3 9.000					11 3	11 0	69
6	5 U303	BEAM		10S			3 11.250	3 9.000					11 8	11 5	71
16	4 U304	BEAM		10S			0 6.000	3 9.000					4 9	4 7	49
48	6 V300	CECIP		17		7 3.000							7 11	7 11	571
		INT. BENT NO. 4													
6	8 H400	BEAM	E	18		40 3.000							42 1	42 1	674
8	8 H401	BEAM	E	18		6 8.000							8 6	8 6	182
8	6 H402	BEAM	E	20		40 3.000							40 3	40 3	484
12	6 H403	BEAM	E	10S			1 0.000	3 10.500					5 11	5 7	101
6	8 H404	BEAM	E	17		23 4.000							24 3	24 3	388
6	8 H405	BEAM	E	17		22 3.000							23 2	23 2	371
3	6 H406	BEAM	E	20		15 4.000							15 4	15 4	69
3	6 H407	BEAM	E	20		28 3.000							28 3	28 3	127
50	4 P400	CECIP	E	34S							1 7.500		5 10	5 9	192
26	5 U400	BEAM	E	13S		4 0.000	4 3.000	4 0.000	4 3.000				17 6	17 2	466
30	5 U401	BEAM	E	13S		4 0.000	4 5.250	4 0.000	4 5.250				17 10	17 6	548
10	5 U402	BEAM	E	10S			4 3.000	4 0.000					12 6	12 3	128
15	5 U403	BEAM	E	10S			4 5.250	4 0.000					12 11	12 8	198
41	4 U404	BEAM	E	10S			1 4.000	1 10.500					4 7	4 4	119
60	6 V400	CECIP	E	17		7 3.000							7 11	7 11	713
18	W5 W400	ANCHOR WELL	E	22		2 1.000	0 9.000						33 1	32 4	99

Bill of Reinforcing Steel

No. Req.	Size/ Mark	Location	Codes C	Codes SH	Codes V	Dimensions B	C	D	E	F	H	K	Nom. Length	Actual Length	Weight
						ft in.	ft in.	ft in.	ft in.	ft in.	ft in.	ft in.	ft in.	ft in.	lb
		INT. BENT NO. 5													
20	6 D500	DOWEL		20		2 6.000							2 6	2 6	75
10	9 H500	BEAM		20		40 3.000							40 3	40 3	1369
10	9 H501	BEAM		17		22 4.000							23 8	23 8	805
12	6 H502	BEAM		20		40 3.000							40 3	40 3	725
16	6 H503	BEAM		10S			1 0.000	3 7.500					5 8	5 4	128
10	9 H504	BEAM		17		23 0.000							24 4	24 4	827
45	4 P500	COLUMN		16			2 0.000					3 3.000	12 3	12 1	363
189	5 P501	DRILLED SHAFT		16			2 6.000					3 6.000	13 6	13 4	2628
58	6 U500	BEAM		13S		2 8.000	4 9.000	2 8.000	4 9.000				16 2	15 8	1365
14	6 U501	BEAM		10S			4 9.000	2 8.000					12 2	11 10	249
62	6 U502	BEAM		13S		2 8.000	4 11.250	2 8.000	4 11.250				16 6	16 0	1490
28	6 U503	BEAM		10S			4 11.250	2 8.000					12 7	12 3	515
54	8 V500	COLUMN		17		23 1.000							24 0	24 0	3460
60	10 V501	DRILLED SHAFT		20		60 0.000							60 0	60 0	15491
		SUPERSTRUCTURE													
		END BENT NO. 1													
28	6 F100	WING BRACE	E	23		1 7.750	5 1.750	1 7.750	1 2.000	1 2.000	1 2.000	1 2.000	8 5	8 5	354
12	6 F101	BEAM	E	19		5 11.000	2 9.000						8 8	8 6	153
6	6 H100	DIAPHRAGM	E	20		44 4.000							44 4	44 4	400
9	8 H101	BEAM & SLAB	E	20		44 4.000							44 4	44 4	1065
5	8 H102	BEAM	E	20		18 6.000							18 6	18 6	247
5	8 H103	BEAM	E	20		31 0.000							31 0	31 0	414
6	6 H104	BEAM	E	20		44 4.000							44 4	44 4	400
6	6 H105	DIAPHRAGM	E	20		8 6.000							8 6	8 6	77
12	6 H106	DIAPHRAGM	E	20		11 2.000							11 2	11 2	201
4	6 H107	DIAPHRAGM	E	20		2 5.000							2 5	2 5	15
8	6 H108	DIAPHRAGM	E	20		3 9.000							3 9	3 9	45
4	5 H109	STRAND TIE	E	20		5 9.000							5 9	5 9	24
58	6 H110	WING	E	20		15 0.000							15 0	15 0	1307
16	8 H111	WING	E	20		16 6.000							16 6	16 6	705
4	8 H112	BEAM	E	18		8 7.000							10 5	10 5	111
48	5 U100	BEAM	E	10S			6 9.000	2 9.000					16 3	16 0	801
14	5 U101	BEAM	E	13S		2 9.000	3 2.000	2 9.000	3 2.000				12 10	12 6	183
14	5 U102	BEAM	E	13S		2 9.000	3 4.250	2 9.000	3 4.250				13 2	12 10	187
61	5 U103	DIAPHRAGM	E	10S			6 6.000	2 3.000					15 3	15 0	954
61	6 U104	DIAPHRAGM	E	19S		5 7.000	2 9.000						8 4	8 2	748
42	5 U105	APPR. SLAB	E	19S		2 0.000	1 3.000						3 3	3 2	139
56	6 U106	DIAPHRAGM	E	19S		3 0.000	4 3.000						7 3	7 1	596
26	5 V100	BEAM	E	20		6 9.000							6 9	6 9	183
24	6 V101	DIAPHRAGM	E	20		5 7.000							5 7	5 7	201
30	6 V102	WING	E	20		9 10.000							9 10	9 10	443
30	6 V103	WING	E	20		10 0.000							10 0	10 0	451
		INT. BENT NO. 2													
6	6 H270	DIAPHRAGM	E	20		8 6.000							8 6	8 6	77
6	6 H271	DIAPHRAGM	E	20		10 11.000							10 11	10 11	98
30	4 H272	DIAPHRAGM	E	20		11 3.000							11 3	11 3	225
4	5 H273	STRAND TIE	E	20		4 10.000							4 10	4 10	20
4	5 H274	STRAND TIE	E	20		5 9.000							5 9	5 9	24
48	4 U270	DIAPHRAGM	E	28S			1 3.000	6 4.000	1 11.000				9 6	9 4	299
12	6 U271	DIAPHRAGM	E	28S			1 10.000	6 3.000	2 3.000				10 4	10 0	180
12	6 U272	DIAPHRAGM	E	28S			1 10.000	5 9.000	2 3.000				9 10	9 6	171
8	6 U273	DIAPHRAGM	E	28S			2 2.000	5 9.000	1 10.000				9 9	9 5	113
4	5 U274	DIAPHRAGM	E	19S		4 5.000	1 1.000						5 6	5 5	23
24	5 U275	DIAPHRAGM	E	6S		4 10.000	1 1.000	1 5.000					7 4	7 1	177
8	5 V270	DIAPHRAGM	E	20		6 7.000							6 7	6 7	55

Nominal lengths are based on out to out dimensions shown in bending diagrams and are listed to the nearest inch for fabricator's use. Actual lengths are measured along centerline bar to the nearest inch. Weights are based on actual lengths.

For bending diagrams and steel reinforcing totals, see Sheet No. 36.
Designed MAC JUL 2026
Detailed SLF JUL 2026
Checked CMR AUG 2026

Reinforcing steel (ASTM A615 Grade 60) fy = 60,000 psi

Codes: C = Required coatings, where E = Epoxy Coated and G = Galvanized.
SH = Required shape, see bending diagrams.
V = Sets of varied bars and number of bars of each length. Bar dimensions vary in equal increments between dimensions shown on this line and the following line and the actual length dimension shown on this line and the following line vary by the specified increment.

BILL OF REINFORCING STEEL

Note: This drawing is not to scale. Follow dimensions.

STATE OF MISSOURI
MARTIN ALAN THORNTON
NUMBER PE-2013006488
PROFESSIONAL ENGINEER
4-SEP-2026

DATE PREPARED 2-SEP-2026
ROUTE I-70 | STATE MO
DISTRICT BR | SHEET NO. BR05-37
COUNTY BOONE
JOB NUMBER JST0017
CONTRACT ID. 251203-D01
PROJECT NO. IS 70-2(128)
BRIDGE NO. A9820

REV	DATE	DESCRIPTION
0	090426	RFC BRIDGE A9820

IF A SEAL IS PRESENT ON THIS SHEET IT HAS BEEN ELECTRONICALLY SEALED AND DATED.

MISSOURI HIGHWAYS AND TRANSPORTATION COMMISSION
105 WEST CAPITOL
JEFFERSON CITY, MO 65102
1-888-ASK-MODOT (1-888-275-6636)

IMPROVE I-70 ROCHEPORT TO COLUMBIA

EMERY SAPP & SONS, INC

HORNER SHIFRIN
ENGINEERS | ARCHITECTS | PLANNERS
THE PENTHOUSE AT THE PLAZA
401 S. 18th St., Ste. 400
ST. LOUIS, MISSOURI 63103
314-531-1420 FAX: 314-531-0966
www.HornerShifrin.com

MO STATE CERTIFICATE OF AUTHORITY #000159 ENGINEERING

REV: RevDesc

B_JST0017_A9820_37_Barbill Data Tables.dgn 9:02:54 PM Eastern 2-SEP-2026

09/08/2026
Released for Construction

Bill of Reinforcing Steel

No. Req.	Size/ Mark	Location	Codes C	SH	V	Dimensions B	C	D	E	F	H	K	Nom. Length	Actual Length	Weight
						ft in.	ft in.	ft in.	ft in.	ft in.	ft in.	ft in.	ft in.	ft in.	lb
		INT. BENT NO. 3													
6	6 H370	DIAPHRAGM	E	20		8 6.000							8 6	8 6	77
6	6 H371	DIAPHRAGM	E	20		10 11.000							10 11	10 11	98
30	4 H372	DIAPHRAGM	E	20		11 3.000							11 3	11 3	225
4	5 H373	STRAND TIE	E	20		4 10.000							4 10	4 10	20
4	5 H374	STRAND TIE	E	20		5 9.000							5 9	5 9	24
48	4 U370	DIAPHRAGM	E	28S			1 3.000	6 4.000	1 11.000				9 6	9 4	299
12	6 U371	DIAPHRAGM	E	28S			1 10.000	6 3.000	2 3.000				10 4	10 0	180
12	6 U372	DIAPHRAGM	E	28S			1 10.000	5 9.000	2 3.000				9 10	9 6	171
8	6 U373	DIAPHRAGM	E	28S			2 2.000	5 9.000	1 10.000				9 9	9 5	113
4	5 U374	DIAPHRAGM	E	19S		4 5.000	1 1.000						5 6	5 5	23
24	5 U375	DIAPHRAGM	E	6S		4 10.000	1 1.000	1 5.000					7 4	7 1	177
8	5 V370	DIAPHRAGM	E	20		6 7.000							6 7	6 7	55
		INT. BENT NO. 4													
20	7 H420	DIAPHRAGM	E	20		8 3.000							8 3	8 3	337
4	6 H421	DIAPHRAGM	E	20	1	39 8.000							39 8	39 8	
		INCREMENT =				40 2.000							40 2	40 2	240
		2.000 INCH													
12	6 H422	DIAPHRAGM	E	20		7 11.000							7 11	7 11	143
24	4 U420	DIAPHRAGM	E	10S			0 9.500	4 10.000					6 5	6 3	100
64	6 U421	DIAPHRAGM	E	10S	16		0 9.500	4 6.000					6 1	5 9	
		INCREMENT =					0 9.500	6 0.000					7 7	7 3	629
		6.000 INCH													
32	6 U422	DIAPHRAGM	E	10S			0 9.500	6 5.000					8 0	7 8	368
8	5 U423	DIAPHRAGM	E	10S			0 4.500	6 5.000					7 2	6 11	58
10	5 U424	DIAPHRAGM	E	6S		4 0.000	0 9.500	1 1.000					5 11	5 8	59
2	5 U425	DIAPHRAGM	E	6S		4 0.000	0 9.500	1 0.000					5 10	5 7	12
32	4 U426	DIAPHRAGM	E	19S	16	2 0.000	1 3.000						3 3	3 2	
		INCREMENT =				2 10.000	1 3.000						4 1	4 0	77
		10.000 INCH													
32	4 U427	DIAPHRAGM	E	19S	8	1 8.000	1 3.000						2 11	2 10	
		INCREMENT =				3 2.000	1 3.000						4 5	4 4	77
		6.000 INCH													
12	4 U428	DIAPHRAGM	E	19S		2 0.000	1 3.000						3 3	3 2	25
2	5 V420	DIAPHRAGM	E	20		4 0.000							4 0	4 0	8
2	5 V421	DIAPHRAGM	E	20		6 8.000							6 8	6 8	14
15	7 H430	DIAPHRAGM	E	20		11 3.000							11 3	11 3	345
3	6 H431	DIAPHRAGM	E	20	1	39 10.000							39 10	39 10	
		INCREMENT =				40 2.000							40 2	40 2	180
		2.000 INCH													
6	6 H432	DIAPHRAGM	E	20		10 11.000							10 11	10 11	98
42	4 U430	DIAPHRAGM	E	10S			0 9.500	4 2.000					5 9	5 7	157
48	6 U431	DIAPHRAGM	E	10S	12		0 9.500	3 10.000					5 5	5 1	
		INCREMENT =					0 9.500	5 4.000					6 11	6 7	424
		6.000 INCH													
24	6 U432	DIAPHRAGM	E	10S			0 9.500	5 9.000					7 4	7 0	252
8	5 U433	DIAPHRAGM	E	10S			0 4.500	5 9.000					6 6	6 3	52
8	5 U434	DIAPHRAGM	E	6S		4 0.000	0 9.500	1 1.000					5 11	5 8	47
2	5 U435	DIAPHRAGM	E	6S		4 0.000	0 9.500	1 0.000					5 10	5 7	12
24	4 U436	DIAPHRAGM	E	19S	12	2 0.000	1 3.000						3 3	3 2	
		INCREMENT =				2 10.000	1 3.000						4 1	4 0	57
		10.000 INCH													
24	4 U437	DIAPHRAGM	E	19S	6	1 0.000	1 3.000						2 3	2 2	
		INCREMENT =				2 6.000	1 3.000						3 9	3 8	47
		6.000 INCH													
21	4 U438	DIAPHRAGM	E	19S		1 4.000	1 3.000						2 7	2 6	35
2	5 V430	DIAPHRAGM	E	20		3 4.000							3 4	3 4	7
2	5 V431	DIAPHRAGM	E	20		6 0.000							6 0	6 0	13

Bill of Reinforcing Steel

No. Req.	Size/ Mark	Location	Codes C	SH	V	Dimensions B	C	D	E	F	H	K	Nom. Length	Actual Length	Weight
						ft in.	ft in.	ft in.	ft in.	ft in.	ft in.	ft in.	ft in.	ft in.	lb
		INT. BENT NO. 5													
8	6 H570	DIAPHRAGM	E	20		5 6.000							5 6	5 6	66
8	6 H571	DIAPHRAGM	E	20		7 11.000							7 11	7 11	95
48	4 H572	DIAPHRAGM	E	20		8 3.000							8 3	8 3	265
4	5 H573	STRAND TIE	E	20		4 10.000							4 10	4 10	20
6	5 H574	STRAND TIE	E	20		5 9.000							5 9	5 9	36
40	4 U570	DIAPHRAGM	E	28S			1 3.000	7 0.000	1 11.000				10 2	10 0	267
16	6 U571	DIAPHRAGM	E	28S			1 10.000	6 11.000	2 3.000				11 0	10 8	256
16	6 U572	DIAPHRAGM	E	28S			1 10.000	6 5.000	2 3.000				10 6	10 2	244
8	6 U573	DIAPHRAGM	E	28S			2 2.000	6 5.000	1 10.000				10 5	10 1	121
4	5 U574	DIAPHRAGM	E	19S		4 5.000	1 1.000						5 6	5 5	23
28	5 U575	DIAPHRAGM	E	6S		4 10.000	1 1.000	1 5.000					7 4	7 1	207
8	5 V570	DIAPHRAGM	E	20		7 3.000							7 3	7 3	60
		END BENT NO. 6													
32	6 F600	WING BRACE	E	23		1 7.750	5 1.750	1 7.750	1 2.000	1 2.000	1 2.000	1 2.000	8 5	8 5	405
14	6 F601	BEAM	E	19		5 11.000	2 9.000						8 8	8 6	179
7	6 H600	DIAPHRAGM	E	20		44 4.000							44 4	44 4	466
9	8 H601	BEAM & SLAB	E	20		44 4.000							44 4	44 4	1065
5	8 H602	BEAM	E	20		25 2.000							25 2	25 2	336
5	8 H603	BEAM	E	20		24 5.000							24 5	24 5	326
6	6 H604	BEAM	E	20		44 4.000							44 4	44 4	400
8	6 H605	DIAPHRAGM	E	20		5 5.000							5 5	5 5	65
20	6 H606	DIAPHRAGM	E	20		8 2.000							8 2	8 2	245
4	6 H607	DIAPHRAGM	E	20		2 5.000							2 5	2 5	15
10	6 H608	DIAPHRAGM	E	20		3 9.000							3 9	3 9	56
5	5 H609	STRAND TIE	E	20		5 9.000							5 9	5 9	30
64	6 H610	WING	E	20		17 0.000							17 0	17 0	1634
16	8 H611	WING	E	20		18 6.000							18 6	18 6	790
5	8 H612	BEAM	E	18		6 8.000							8 6	8 6	113
36	5 U600	BEAM	E	10S			6 9.000	2 9.000					16 3	16 0	601
14	5 U601	BEAM	E	13S		2 9.000	3 2.000	2 9.000	3 2.000				12 10	12 6	183
21	5 U602	BEAM	E	13S		2 9.000	3 4.250	2 9.000	3 4.250				13 2	12 10	281
54	5 U603	DIAPHRAGM	E	10S			7 1.000	2 3.000					16 5	16 2	911
54	6 U604	DIAPHRAGM	E	19S		6 2.000	2 9.000						8 11	8 9	710
42	5 U605	APPR. SLAB	E	19S		2 0.000	1 3.000						3 3	3 2	139
56	6 U606	DIAPHRAGM	E	19S		3 0.000	4 3.000						7 3	7 1	596
36	5 V600	BEAM	E	20		6 9.000							6 9	6 9	253
30	6 V601	DIAPHRAGM	E	20		6 2.000							6 2	6 2	278
34	6 V602	WING	E	20		11 0.000							11 0	11 0	562
34	6 V603	WING	E	20		10 10.000							10 10	10 10	553
		UNIT 1 SLAB													
252	6 S1	SLAB	E	20		56 11.000							56 11	56 11	21543
762	6 S2	SLAB	E	20		44 5.000							44 5	44 5	50836
792	4 S3	SLAB	E	20		7 0.000							7 0	7 0	3703
35	8 S4	SLAB	E	20		49 3.000							49 3	49 3	4602
70	8 S5	SLAB	E	20		34 9.000							34 9	34 9	6495
70	8 S6	SLAB	E	20		35 1.000							35 1	35 1	6557
35	8 S7	SLAB	E	20		49 9.000							49 9	49 9	4649
12	5 S8	SLAB	E	20		3 0.000							3 0	3 0	38
399	5 S9	SLAB	E	20		58 0.000							58 0	58 0	24137
572	6 S10	SLAB	E	20		44 5.000							44 5	44 5	38160
		UNIT 2 SLAB													
144	5 S51	SLAB	E	20		47 9.000							47 9	47 9	7172
108	7 S52	SLAB	E	20		47 9.000							47 9	47 9	10541
617	6 S53	SLAB	E	20		44 5.000							44 5	44 5	41162
498	4 S54	SLAB	E	20		7 0.000							7 0	7 0	2329
164	8 S55	SLAB	E	20		37 11.000							37 11	37 11	16603
12	5 S56	SLAB	E	20		3 0.000							3 0	3 0	38
40	4 S57	SLAB	E	20		17 0.000							17 0	17 0	454
366	6 S58	SLAB	E	20		54 8.000							54 8	54 8	30052
411	6 S59	SLAB	E	20		44 5.000							44 5	44 5	27419
340	4 S60	SLAB	E	10		0 6.000	0 7.000	3 8.000	0 6.000				5 10	5 5	1230

Nominal lengths are based on out to out dimensions shown in bending diagrams and are listed to the nearest inch for fabricator's use. Actual lengths are measured along centerline bar to the nearest inch. Weights are based on actual lengths.

For bending diagrams and steel reinforcing totals, see Sheet No. 36.

Designed MAC JUL 2026
Detailed SLF JUL 2026
Checked CMR AUG 2026

Reinforcing steel (ASTM A615 Grade 60) fy = 60,000 psi

Codes: C = Required coatings, where E = Epoxy Coated and G = Galvanized.
SH = Required shape, see bending diagrams.
V = Sets of varied bars and number of bars of each length. Bar dimensions vary in equal increments between dimensions shown on this line and the following line and the actual length dimension shown on this line and the following line vary by the specified increment.

BILL OF REINFORCING STEEL

Note: This drawing is not to scale. Follow dimensions.

STATE OF MISSOURI
MARTIN ALAN FRATTINI
NUMBER PE-2013006488
PROFESSIONAL ENGINEER
4-7-26

DATE PREPARED 2-SEP-2026
ROUTE I-70 | STATE MO
DISTRICT BR | SHEET NO. BR05-38
COUNTY BOONE
JOB NUMBER JST0017
CONTRACT ID. 251203-D01
PROJECT NO. IS 70-2(128)
BRIDGE NO. A9820

REV	DATE	DESCRIPTION
0	090426	RFC BRIDGE A9820

IMPROVE I-70 ROCHEPORT TO COLUMBIA

MISSOURI HIGHWAYS AND TRANSPORTATION COMMISSION
105 WEST CAPITOL
JEFFERSON CITY, MO 65102
1-888-ASK-MODOT (1-888-275-6636)

EMERY SAPP & SONS, INC
HORNER SHIFRIN
MO STATE CERTIFICATE OF AUTHORITY #000159 ENGINEERING

IF A SEAL IS PRESENT ON THIS SHEET IT HAS BEEN ELECTRONICALLY SEALED AND DATED.

REV: RevDesc

09/08/2026
Released for Construction

Bill of Reinforcing Steel

No. Req.	Size/ Mark	Location	Codes C	SH	V	Dimensions B ft in.	C ft in.	D ft in.	E ft in.	F ft in.	H ft in.	K ft in.	Nom. Length ft in.	Actual Length ft in.	Weight lb
		BARRIERS													
20	5 K1	BARRIER	E	27S		3 5.000	0 9.250	0 5.375	2 11.750		0 5.250	0 1.000	7 7	7 5	155
92	5 K2	BARRIER	E	27S		3 5.000	0 9.250	1 2.500	2 2.750		1 2.250	0 2.750	7 8	7 5	712
20	5 K4	BARRIER	E	19S	4	2 4.250	0 10.000						3 2	3 1	
		INCREMENT =				2 6.250	0 10.000						3 4	3 3	66
		0.500 INCH													
20	5 K5	BARRIER	E	38S	4			1 6.500	0 9.500	0 8.250	1 6.000	0 4.000	3 0	2 10	
		INCREMENT =						1 8.500	0 9.500	0 8.250	1 8.000	0 4.500	3 2	3 0	61
		0.500 INCH													
12	5 K6	BARRIER	E	19S		2 6.750	0 10.000						3 5	3 4	42
12	5 K7	BARRIER	E	21S		2 6.625		0 10.000			2 6.000	0 6.250	3 5	3 2	40
36	5 K8	BARRIER	E	19S	4	2 8.500	0 10.000						3 7	3 5	
		INCREMENT =				3 2.500	0 10.000						4 1	3 11	139
		0.750 INCH													
36	5 K9	BARRIER	E	21S	4	2 8.500		0 10.000			2 7.750	0 6.750	3 6	3 4	
		INCREMENT =				3 2.500		0 10.000			3 1.750	0 7.750	4 1	3 10	135
		0.750 INCH													
44	5 K10	BARRIER	E	19S		3 3.000	0 10.000						4 1	4 0	184
44	5 K11	BARRIER	E	21S		3 3.000		0 10.000			3 2.250	0 7.750	4 1	3 10	176
24	5 K12	BARRIER	E	20		16 9.000							16 9	16 9	419
12	5 K13	BARRIER	E	20	2	10 0.000							10 0	10 0	
		INCREMENT =				16 0.000							16 0	16 0	163
		3 FT 0.000 INCH													
24	5 K14	BARRIER	E	20		18 9.000							18 9	18 9	469
12	5 K15	BARRIER	E	20	2	12 0.000							12 0	12 0	
		INCREMENT =				18 0.000							18 0	18 0	188
		3 FT 0.000 INCH													
1422	5 R1	BARRIER	E	26		3 3.000	0 5.500	0 2.250		0 5.500	3 0.750	0 6.750	6 8	6 7	9764
1422	5 R2	BARRIER	E	19S		1 8.500	0 9.500						2 6	2 5	3584
1422	5 R3	BARRIER	E	27S			0 9.500	1 3.250	0 5.000	1 0.000	1 3.000	0 3.000	3 6	3 4	4944
320	5 R4	BARRIER	E	20		11 8.000							11 8	11 8	3894
40	5 R5	BARRIER	E	20		52 0.000							52 0	52 0	2169
40	5 R6	BARRIER	E	20		40 11.000							40 11	40 11	1707
40	5 R7	BARRIER	E	20		41 1.000							41 1	41 1	1714
40	5 R8	BARRIER	E	20		54 9.000							54 9	54 9	2284
60	5 R9	BARRIER	E	20		44 8.000							44 8	44 8	2795
		SLIP FORM OPTION													
108	5 C1	TYPE D BARRIER	E	20		12 0.000							12 0	12 0	1352
8	5 C2	TYPE D BARRIER	E	20		8 0.000							8 0	8 0	67

Bill of Reinforcing Steel

No. Req.	Size/ Mark	Location	Codes C	SH	V	Dimensions B ft in.	C ft in.	D ft in.	E ft in.	F ft in.	H ft in.	K ft in.	Nom. Length ft in.	Actual Length ft in.	Weight lb

Nominal lengths are based on out to out dimensions shown in bending diagrams and are listed to the nearest inch for fabricator's use. Actual lengths are measured along centerline bar to the nearest inch. Weights are based on actual lengths.

For bending diagrams and steel reinforcing totals, see Sheet No. 36.
Designed MAC JUL 2026
Detailed SLF JUL 2026
Checked CMR AUG 2026

Reinforcing steel (ASTM A615 Grade 60) fy = 60,000 psi

Codes: C = Required coatings, where E = Epoxy Coated and G = Galvanized.
SH = Required shape, see bending diagrams.
V = Sets of varied bars and number of bars of each length. Bar dimensions vary in equal increments between dimensions shown on this line and the following line and the actual length dimension shown on this line and the following line vary by the specified increment.

BILL OF REINFORCING STEEL

Note: This drawing is not to scale. Follow dimensions.

STATE OF MISSOURI
MARTIN ALAN THORNTON
NUMBER PE-2013006488
PROFESSIONAL ENGINEER

DATE PREPARED: 2-SEP-2026
ROUTE: I-70 STATE: MO
DISTRICT: BR SHEET NO.: BR05-39
COUNTY: BOONE
JOB NUMBER: JST0017
CONTRACT ID.: 251203-D01
PROJECT NO.: IS 70-2(128)
BRIDGE NO.: A9820

REV	DATE	DESCRIPTION
0	090426	RFC BRIDGE A9820

IF A SEAL IS PRESENT ON THIS SHEET IT HAS BEEN ELECTRONICALLY SEALED AND DATED.

MISSOURI HIGHWAYS AND TRANSPORTATION COMMISSION
105 WEST CAPITOL
JEFFERSON CITY, MO 65102
1-888-ASK-MODOT (1-888-275-6636)

IMPROVE I-70 ROCHEPORT TO COLUMBIA

HORNER SHIFRIN
HORNER & SHIFRIN, INC. MISSOURI CERTIFICATE OF AUTHORITY #2001019004
THE PENTHOUSE AT THE PARK
401 S. 18th St., Ste. 400
ST. LOUIS, MISSOURI 63103
314-531-1420 FAX: 314-531-0966
www.HornerShifrin.com

EMERY SAPP & SONS, INC

MO STATE CERTIFICATE OF AUTHORITY #000159 ENGINEERING

REV: RevDesc

09/08/2026
Released for Construction

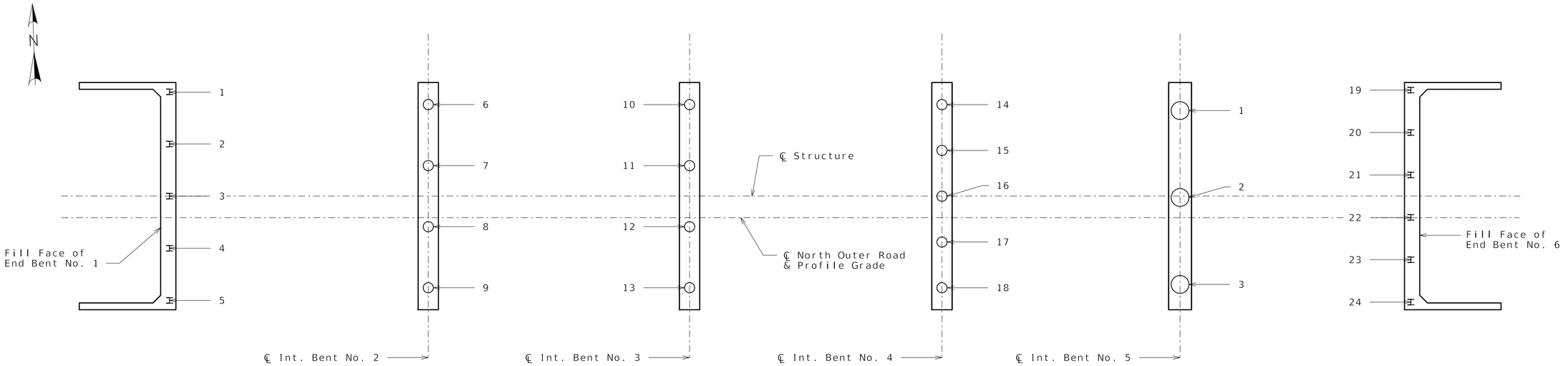

PART PLAN SHOWING PILE NUMBERING FOR RECORDING AS-BUILT PILE DATA & DRILLED SHAFT NUMBERING FOR RECORDING AS-BUILT DRILLED SHAFT DATA

As-Built Pile Data

Pile No.	Length in Place (ft)	PDA Nom. Axial Compressive Resistance (kips)	PDA End of Drive Blow Count (blows/in.)	Actual End of Drive Blow Count (blows/in.)	Remarks
					Intermediate Bent No. 2
6					
7					
8					
9					
					Intermediate Bent No. 3
10					
11					
12					
13					
					Intermediate Bent No. 4
14					
15					
16					
17					
18					

Note:
Indicate in remarks column:
A. Pile type and grade
B. Batter
C. Driven to practical refusal
D. PDA test pile
E. Minimum tip elevation controlled

(Use when actual blow count is less than PDA blow count due to minimum tip elevation requirement. A plus sign (+) shall be placed after the PDA nominal axial compressive resistance value indicating actual value is higher than PDA value.)

This sheet to be completed by construction personnel.

As-Built Pile Data

Pile No.	Length in Place (ft)	Computed Nominal Axial Compressive Resistance (kips)	Remarks
			End Bent No. 1
1			
2			
3			
4			
5			
			End Bent No. 6
19			
20			
21			
22			
23			
24			

As-Built Drilled Shaft Data

Shaft No.	Top of Sound Rock (Elev.)	Tip of Casing (Elev.)	Bottom of Rock Socket (Elev.)	Remarks
				Intermediate Bent No. 5
1				
2				
3				

AS BUILT PILE DATA AND AS BUILT DRILLED SHAFT DATA

Designed MAC APR 2026
Detailed SLF APR 2026
Checked CMR AUG 2026

Note: This drawing is not to scale. Follow dimensions.

STATE OF MISSOURI
MARTIN ALAN THORNE
NUMBER PE-2013006488
PROFESSIONAL ENGINEER
4-27-26

DATE PREPARED
2-SEP-2026

ROUTE	STATE
I-70	MO

DISTRICT	SHEET NO.
BR	BR05-40

COUNTY
BOONE

JOB NUMBER
JST0017

CONTRACT ID.
251203-D01

PROJECT NO.
IS 70-2(128)

BRIDGE NO.
A9820

REV	DATE	DESCRIPTION
0	090426	RFC BRIDGE A9820

IF A SEAL IS PRESENT ON THIS SHEET IT HAS BEEN ELECTRONICALLY SEALED AND DATED.

MISSOURI HIGHWAYS AND TRANSPORTATION COMMISSION
105 WEST CAPITOL
JEFFERSON CITY, MO 65102
1-888-ASK-MODOT (1-888-275-6636)

IMPROVE I-70 ROCHEPORT TO COLUMBIA

HORNER SHIFRIN
THE POWER OF BEING UNDERSTOOD
401 S. 18th St., Ste. 400
St. Louis, MO 63103
314-621-6211 FAX: 314-621-6866
www.HornerShifrin.com

EMERY SAPPS SONS, INC

MO STATE CERTIFICATE OF AUTHORITY #000159 ENGINEERING

REV. RevDesc

09/08/2026
Released for Construction

Missouri Department of Transportation
Construction and Materials

BORING NO. B-1N
Page 1 of 2

Job No.: ST0017 (SCI No. 2025-0017.10) **County:** Boone **Route:** 70 Outer Roads
Design: **Skew:** **Location:** Columbia, Missouri
Bent: **Logged By:** Ian Aubuchon **Operator:** Palmerton and Parrish, Inc.
Station: **Northing:** 1142629.823 **Date of Work:** 05/05/25
Offset: **Easting:** 1665332.19 **Depth to Water:** 10.0
Elevation: 584.6 **Requested Northing:** **Depth Hole Open:** 62.5
Requested Station: **Requested Easting:** **Time Change:**
Requested Offset: **Equipment:** CME-55,Split-Spoon Sampler, Shelby Tube, NQ
Requested Elevation: **Location Note:**
Drill No.: **Hammer Efficiency:** 84.7% **Drilling Method:** Continuous Flight Auger, Mud rotary

Depth (ft)	Description	Elevation (ft)	Sample Type	REC % (RQD %)	Blow Counts (N_{60})	Shear Data	Field Tests	Index Tests
0	0.0-0.3' 4" TOPSOIL							
	0.3-8.0' (FILL) Brown, LEAN CLAY, trace crushed rock, trace fine- to coarse-grained sand			39	3-4-5 (13)		PP = 1.50 tsf	MC = 18.7%
	3.0' With fine- to coarse-grained sand	580		96		Qu Test Results UCS = 1.20 ksf MC = 25.1% γ_{moist} = 112.8 pcf		LL = 34 PL = 20
5	5.5' Few fine- to coarse-grained sand			72	1-1-2 (4)		PP <0.25 tsf	MC = 25.5%
	8.0-9.5' (SC) Brown, SILTY SAND, fine- to coarse-grained	575		100		Qu Test Results MC = 26.2% γ_{moist} = 116.5 pcf		LL = 24 PL = 19
10	8.0' *INSUFFICIENT COHESIVE SAMPLE FOR MEANINGFUL STRENGTH TESTING*							
	9.5-11.0' (SP) Brown, POORLY GRADED SAND, fine- to coarse-grained							
	11.0-17.0' (CL) Brown, SANDY LEAN CLAY, sand is fine- to coarse-grained	570		83	1-1-1 (3)			MC = 30.1%
15	17.0-40.3' (SP-SC) Brown, POORLY GRADED SAND WITH CLAY, fine- to coarse-grained, clay is lean							
	20.0' Switched to mud rotary	565		33	0-2-1 (4)			Sieve Analysis Sieve # % Passing #4 100.0 #10 100.0 #20 99.9 #40 96.1 #60 53.7 #100 19.2 #140 13.3 #200 11.1
20	22.0' Becomes gray							
		560		78	3-4-7 (16)			
25								
		555		50	2-3-4 (10)			
30								
		550		39	5-5-6 (16)			
35								

N_{60} = (Em/60)Nm N_{60} - Corrected N value for standard 60% SPT efficiency; Em - Measured hammer efficiency in percent; Nm - Observed N-value
(1) = Assumed, (2) = Actual

Coordinate System: Modified U.S. State Plane 1988 **Coordinate Zone:** Missouri Central **Coordinate Proj. Factor:** 1.00000000
Coordinate Datum: NAD 88 (CONUS) **Coordinate Units:** U.S. Survey Feet

* Persons using this information are cautioned that the materials shown are determined by the equipment noted and accuracy of the "log of materials" is limited thereby and by judgement of the operator. THIS INFORMATION IS FOR DESIGN PURPOSES ONLY.

LETTER BOREHOLE - MODOT 20150728.GDT - 7/31/25 12:09 - N:\LABORATORY\ACTIVE GINT PROJECTS\2025-0017.10 PERCHE CREEK MODOT.GPJ

Missouri Department of Transportation
Construction and Materials

BORING NO. B-1N
Page 2 of 2

Job No.: ST0017 (SCI No. 2025-0017.10) **County:** Boone **Route:** 70 Outer Roads
Design: **Skew:** **Location:** Columbia, Missouri
Bent: **Logged By:** Ian Aubuchon **Operator:** Palmerton and Parrish, Inc.
Station: **Northing:** 1142629.823 **Date of Work:** 05/05/25
Offset: **Easting:** 1665332.19 **Depth to Water:** 10.0
Elevation: 584.6 **Requested Northing:** **Depth Hole Open:** 62.5
Requested Station: **Requested Easting:** **Time Change:**
Requested Offset: **Equipment:** CME-55,Split-Spoon Sampler, Shelby Tube, NQ
Requested Elevation: **Location Note:**
Drill No.: **Hammer Efficiency:** 84.7% **Drilling Method:** Continuous Flight Auger, Mud rotary

Depth (ft)	Description	Elevation (ft)	Sample Type	REC % (RQD %)	Blow Counts (N_{60})	Shear Data	Field Tests	Index Tests
35	17.0-40.3' (SP-SC) Brown, POORLY GRADED SAND WITH CLAY, fine- to coarse-grained, clay is lean *(continued)*							
		545		33	5-5-11 (23)			
40	40.3-47.0' (SP) Gray, POORLY GRADED SAND WITH GRAVEL, fine- to coarse-grained, gravel is fine							
		540		50	15-9-10 (27)			
45	47.0-52.5' (SP) Gray, POORLY GRADED SAND, fine- to coarse-grained							
		535		50	9-6-6 (17)			
50	52.5-62.5' LIMESTONE: Gray, moderately hard, finely crystalline to micritic, thin to thick bedding, moderately weathered, dense, with chert nodules							
		530		93 (13)				
55				97 (78)		Qu Test Results UCS = 655 ksf MC = 0% γ_{moist} = 150 pcf		
		525		100 (100)		Qu Test Results UCS = 641 ksf MC = 0% γ_{moist} = 159.1 pcf		
60	Refusal at 52.5 feet. Bottom of borehole at 62.5 feet.							

N_{60} = (Em/60)Nm N_{60} - Corrected N value for standard 60% SPT efficiency; Em - Measured hammer efficiency in percent; Nm - Observed N-value
(1) = Assumed, (2) = Actual

Coordinate System: Modified U.S. State Plane 1988 **Coordinate Zone:** Missouri Central **Coordinate Proj. Factor:** 1.00000000
Coordinate Datum: NAD 88 (CONUS) **Coordinate Units:** U.S. Survey Feet

* Persons using this information are cautioned that the materials shown are determined by the equipment noted and accuracy of the "log of materials" is limited thereby and by judgement of the operator. THIS INFORMATION IS FOR DESIGN PURPOSES ONLY.

LETTER BOREHOLE - MODOT 20150728.GDT - 7/31/25 12:09 - N:\LABORATORY\ACTIVE GINT PROJECTS\2025-0017.10 PERCHE CREEK MODOT.GPJ

STATE OF MISSOURI
MARTIN ALAN THORNE
NUMBER PE-2013006488
PROFESSIONAL ENGINEER
4-30-2027

DATE PREPARED 2-SEP-2026
ROUTE I-70 | STATE MO
DISTRICT BR | SHEET NO. BR05-41
COUNTY BOONE
JOB NUMBER JST0017
CONTRACT ID. 251203-D01
PROJECT NO. IS 70-2(128)
BRIDGE NO. A9820

DESCRIPTION: RFC BRIDGE A9820
DATE: 090426
REV: 0

IF A SEAL IS PRESENT ON THIS SHEET IT HAS BEEN ELECTRONICALLY SEALED AND DATED.

MISSOURI HIGHWAYS AND TRANSPORTATION COMMISSION
105 WEST CAPITOL
JEFFERSON CITY, MO 65102
1-888-ASK-MODOT (1-888-275-6636)

IMPROVE I-70 ROCHEPORT TO COLUMBIA

EMERY SAPP & SONS, INC

HORNER SHIFRIN
Horner & Shifrin, Inc. (HORNER-SHIFRIN)
401 S. 18th St., Ste. 300
St. Louis, MO 63103-2759
314-531-1420 FAX: 314-531-0966
www.HornerShifrin.com

MO STATE CERTIFICATE OF AUTHORITY #000159 ENGINEERING

REV. RevDesc

BORING DATA

Designed MAC APR 2026
Detailed CAB APR 2026
Checked TPL JUL 2026

Note: For locations of borings, see Sheet No. 1.
Note: This drawing is not to scale. Follow dimensions.

B_JST0017_A9820_41_Boring Log 1.dgn 1:02:08 AM Eastern 2-SEP-2026

09/08/2026
Released for Construction

Missouri Department of Transportation
Construction and Materials

BORING NO. B-2N
Page 1 of 3

Job No.: ST0017 (SCI No. 2025-0017.10) **County:** Boone **Route:** 70 Outer Roads
Design: **Skew:** **Location:** Columbia, Missouri
Bent: **Logged By:** Ian Aubuchon **Operator:** Palmerton and Parrish, Inc.
Station: **Northing:** 1142620.567 **Date of Work:** 05/06/25
Offset: **Easting:** 1665523.038 **Depth to Water:** 12.0
Elevation: 582.9 **Requested Northing:** **Depth Hole Open:** 76.0
Requested Station: **Requested Easting:** **Time Change:**
Requested Offset: **Equipment:** CME-55,Split-Spoon Sampler, Shelby Tube, NQ
Requested Elevation: **Location Note:**
Drill No.: **Hammer Efficiency:** 84.7% **Drilling Method:** Continuous Flight Auger, Mud rotary

Depth (ft)	Description	Elevation (ft)	Sample Type	REC % (RQD %)	Blow Counts (N_{60})	Shear Data	Field Tests	Index Tests
0	0.0-0.3' 3" TOPSOIL 0.3-5.5' (CL) Brown, LEAN CLAY	580		96		Qu Test Results UCS = 3.00 ksf MC = 20.3% γ_{moist} = 127.3 pcf		LL = 27 PL = 18
5				83	2-2-3 (7)		PP = 1.00 tsf	MC = 30.1%
	5.5-7.0' (ML) Brown, SILT 6.0' *INSUFFICIENT COHESIVE SAMPLE FOR MEANINGFUL STRENGTH TESTING*	575		92		Qu Test Results MC = 23.3% γ_{moist} = 120.5 pcf		LL = 22 PL = 18
10	7.0-8.0' (SP) Brown, POORLY GRADED SAND, fine- to coarse-grained 8.0-13.0' (CL) Brown, SANDY LEAN CLAY, sand is fine- to coarse-grained			94	2-3-3 (8)		PP = 0.25 tsf	MC = 22.3%
		570						
15	13.0-22.0' (SP) Brown, POORLY GRADED SAND, fine- to coarse-grained 15.0' Switched to mud rotary			56	1-1-1 (3)			
		565						
20				50	2-2-3 (7)			
	22.0-32.0' (CL) Gray, LEAN CLAY, trace fine- to coarse-grained sand	560		100	1-1-2 (4)			MC = 24.6%
25								
	27.0' With fine- to coarse-grained sand	555		100	3-5-8 (18)			MC = 26.4%
30								
	32.0-39.9' (SP) Gray, POORLY GRADED SAND, fine- to coarse-grained	550		28	4-6-4 (14)			
35								

N_{60} = (Em/60)Nm N_{60} - Corrected N value for standard 60% SPT efficiency; Em - Measured hammer efficiency in percent; Nm - Observed N-value
(1) = Assumed, (2) = Actual

Coordinate System: Modified U.S. State Plane 1988 **Coordinate Zone:** Missouri Central **Coordinate Proj. Factor:** 1.00000000
Coordinate Datum: NAD 88 (CONUS) **Coordinate Units:** U.S. Survey Feet

* Persons using this information are cautioned that the materials shown are determined by the equipment noted and accuracy of the "log of materials" is limited thereby and by judgement of the operator. THIS INFORMATION IS FOR DESIGN PURPOSES ONLY.

LETTER BOREHOLE - MODOT 20150728.GDT - 7/31/25 12:09 - N:\LABORATORY\ACTIVE GINT PROJECTS\2025-0017.10 PERCHE CREEK MODOT.GPJ

Missouri Department of Transportation
Construction and Materials

BORING NO. B-2N
Page 2 of 3

Job No.: ST0017 (SCI No. 2025-0017.10) **County:** Boone **Route:** 70 Outer Roads
Design: **Skew:** **Location:** Columbia, Missouri
Bent: **Logged By:** Ian Aubuchon **Operator:** Palmerton and Parrish, Inc.
Station: **Northing:** 1142620.567 **Date of Work:** 05/06/25
Offset: **Easting:** 1665523.038 **Depth to Water:** 12.0
Elevation: 582.9 **Requested Northing:** **Depth Hole Open:** 76.0
Requested Station: **Requested Easting:** **Time Change:**
Requested Offset: **Equipment:** CME-55,Split-Spoon Sampler, Shelby Tube, NQ
Requested Elevation: **Location Note:**
Drill No.: **Hammer Efficiency:** 84.7% **Drilling Method:** Continuous Flight Auger, Mud rotary

Depth (ft)	Description	Elevation (ft)	Sample Type	REC % (RQD %)	Blow Counts (N_{60})	Shear Data	Field Tests	Index Tests
35	32.0-39.9' (SP) Gray, POORLY GRADED SAND, fine- to coarse-grained *(continued)*	545		61	5-9-15 (34)			
40	39.9-42.0' Weak Rock: Limestone							
	42.0-49.5' POORLY GRADED SAND (SP): Gray, fine- to coarse-grained	540		61	13-14-15 (41)			
45				17	10-10-9 (27)			
		535		13	1-3-50/0.3'			
50	49.5-75.5' LIMESTONE: Gray, hard, finely crystalline to micritic, medium to thick bedding, moderately weathered, dense			100 (0)				
		530		95 (82)		Qu Test Results UCS = 804 ksf MC = 0% γ_{moist} = 161.6 pcf		
55	55.0' 3.5" DOLOMITE							
		525		100 (87)		Qu Test Results UCS = 544 ksf MC = 0% γ_{moist} = 167.2 pcf		
60						Qu Test Results UCS = 552 ksf MC = 0% γ_{moist} = 156.1 pcf		
	62.0' Thick to Massive bedding	520		100 (100)				
65								
		515		100 (92)		Qu Test Results UCS = 671 ksf		
70								

N_{60} = (Em/60)Nm N_{60} - Corrected N value for standard 60% SPT efficiency; Em - Measured hammer efficiency in percent; Nm - Observed N-value
(1) = Assumed, (2) = Actual

Coordinate System: Modified U.S. State Plane 1988 **Coordinate Zone:** Missouri Central **Coordinate Proj. Factor:** 1.00000000
Coordinate Datum: NAD 88 (CONUS) **Coordinate Units:** U.S. Survey Feet

* Persons using this information are cautioned that the materials shown are determined by the equipment noted and accuracy of the "log of materials" is limited thereby and by judgement of the operator. THIS INFORMATION IS FOR DESIGN PURPOSES ONLY.

LETTER BOREHOLE - MODOT 20150728.GDT - 7/31/25 12:09 - N:\LABORATORY\ACTIVE GINT PROJECTS\2025-0017.10 PERCHE CREEK MODOT.GPJ

STATE OF MISSOURI
MARTIN ALAN THORNTON
NUMBER PE-2013006488
PROFESSIONAL ENGINEER
4-4-26

DATE PREPARED: 2-SEP-2026
ROUTE: I-70 | STATE: MO
DISTRICT: BR | SHEET NO.: BR05-42
COUNTY: BOONE
JOB NUMBER: JST0017
CONTRACT ID.: 251203-D01
PROJECT NO.: IS 70-2(128)
BRIDGE NO.: A9820

REV	DATE	DESCRIPTION
0	090426	RFC BRIDGE A9820

IF A SEAL IS PRESENT ON THIS SHEET IT HAS BEEN ELECTRONICALLY SEALED AND DATED.

MISSOURI HIGHWAYS AND TRANSPORTATION COMMISSION
105 WEST CAPITOL
JEFFERSON CITY, MO 65102
1-888-ASK-MODOT (1-888-275-6636)

IMPROVE I-70 ROCHEPORT TO COLUMBIA

HORNER SHIFRIN
HORNER & SHIFRIN, INC.
ENGINEERS • ARCHITECTS • PLANNERS
401 S. 18th St., Ste. 300
St. Louis, MO 63103-2759
314-531-1420 FAX: 314-531-0966
www.HornerShifrin.com

EMERY SAPP & SONS, INC

MO STATE CERTIFICATE OF AUTHORITY #000159 ENGINEERING

REV. RevDesc

BORING DATA

Designed MAC APR 2026
Detailed CAB APR 2026
Checked TPL JUL 2026

Note: For locations of borings, see Sheet No. 1.
Note: This drawing is not to scale. Follow dimensions.

B_JST0017_A9820_42_Boring Log 2.dgn 1:01:59 AM Eastern 2-SEP-2026

09/08/2026
Released for Construction

Missouri Department of Transportation
Construction and Materials

BORING NO. B-2N
Page 3 of 3

Job No.: ST0017 (SCI No. 2025-0017.10) **County:** Boone **Route:** 70 Outer Roads
Design: **Skew:** **Location:** Columbia, Missouri
Bent: **Logged By:** Ian Aubuchon **Operator:** Palmerton and Parrish, Inc.
Station: **Northing:** 1142620.567 **Date of Work:** 05/06/25
Offset: **Easting:** 1665523.038 **Depth to Water:** 12.0
Elevation: 582.9 **Requested Northing:** **Depth Hole Open:** 76.0
Requested Station: **Requested Easting:** **Time Change:**
Requested Offset: **Equipment:** CME-55,Split-Spoon Sampler, Shelby Tube, NQ
Requested Elevation: **Location Note:**
Drill No.: **Hammer Efficiency:** 84.7% **Drilling Method:** Continuous Flight Auger, Mud rotary

Depth (ft)	Graphic	Description	Elevation (ft)	Sample Type	REC % (RQD %)	Blow Counts (N_{60})	Shear Data	Field Tests	Index Tests
70									
		49.5-75.5' LIMESTONE: Gray, hard, finely crystalline to micritic, medium to thick bedding, moderately weathered, dense *(continued)*					MC = 0% γ_{moist} = 165 pcf		
			510		94 (87)				
75		Refusal at 49.5 feet. Bottom of borehole at 75.5 feet.					Qu Test Results UCS = 794 ksf MC = 0% γ_{moist} = 167.1 pcf		

N_{60} = (Em/60)Nm N_{60} - Corrected N value for standard 60% SPT efficiency; Em - Measured hammer efficiency in percent; Nm - Observed N-value
(1) = Assumed, (2) = Actual

Coordinate System: Modified U.S. State Plane 1988 **Coordinate Zone:** Missouri Central **Coordinate Proj. Factor:** 1.00000000
Coordinate Datum: NAD 88 (CONUS) **Coordinate Units:** U.S. Survey Feet

* Persons using this information are cautioned that the materials shown are determined by the equipment noted and accuracy of the "log of materials" is limited thereby and by judgement of the operator. THIS INFORMATION IS FOR DESIGN PURPOSES ONLY.

LETTER BOREHOLE - MODOT 20150728.GDT - 7/31/25 12:09 - N:\LABORATORY\ACTIVE GINT PROJECTS\2025-0017.10 PERCHE CREEK MODOT.GPJ

Missouri Department of Transportation
Construction and Materials

BORING NO. B-3N
Page 1 of 3

Job No.: ST0017 (SCI No. 2025-0017.10) **County:** Boone **Route:** 70 Outer Roads
Design: **Skew:** **Location:** Columbia, Missouri
Bent: **Logged By:** Ian Aubuchon **Operator:** Palmerton and Parrish, Inc.
Station: **Northing:** 1142615.528 **Date of Work:** 05/08/25
Offset: **Easting:** 1665697.456 **Depth to Water:** 8.0
Elevation: 583.4 **Requested Northing:** **Depth Hole Open:** 72.0
Requested Station: **Requested Easting:** **Time Change:**
Requested Offset: **Equipment:** CME-55,Split-Spoon Sampler, Shelby Tube, NQ
Requested Elevation: **Location Note:**
Drill No.: **Hammer Efficiency:** 84.7% **Drilling Method:** Continuous Flight Auger, Mud rotary

Depth (ft)	Graphic	Description	Elevation (ft)	Sample Type	REC % (RQD %)	Blow Counts (N_{60})	Shear Data	Field Tests	Index Tests
0		0.0-0.3' 3" TOPSOIL							
		0.3-3.0' (FILL) Brown and gray, LEAN CLAY, trace fine- to coarse-grained sand, trace wood			94	2-6-10 (23)			MC = 17.1%
		3.0-8.0' (CL) Brown and gray, LEAN CLAY	580		100		Qu Test Results UCS = 1.60 ksf MC = 25.5% γ_{moist} = 121.3 pcf		LL = 35 PL = 20
5					94	1-2-3 (7)		PP = 0.75 tsf	MC = 31.7%
		8.0-12.0' (SP) Brown, POORLY GRADED SAND, fine- to coarse-grained	575		100	1-1-1 (3)			
10									
		12.0-17.0' (CL) Gray, LEAN CLAY, with fine- to coarse-grained sand	570		100	1-1-1 (3)		PP <0.25 tsf	MC = 26.1%
15									
		17.0-37.0' (SP-SC) Brown and gray, POORLY GRADED SAND WITH CLAY, fine- to coarse-grained, trace fine gravel, clay is lean	565		67	1-1-2 (4)			
20		20.0' Switched to mud rotary							
		22.0' Becomes gray	560		78	3-3-2 (7)			Sieve Analysis Sieve # % Passing 3/8-inch 100.0 #4 99.6 #10 99.4 #20 94.5 #40 67.0 #60 41.1 #100 24.6 #140 14.5 #200 10.4
25									
			555		39	4-5-4 (13)			
30									
			550		50	2-3-5 (11)			
35									

N_{60} = (Em/60)Nm N_{60} - Corrected N value for standard 60% SPT efficiency; Em - Measured hammer efficiency in percent; Nm - Observed N-value
(1) = Assumed, (2) = Actual

Coordinate System: Modified U.S. State Plane 1988 **Coordinate Zone:** Missouri Central **Coordinate Proj. Factor:** 1.00000000
Coordinate Datum: NAD 88 (CONUS) **Coordinate Units:** U.S. Survey Feet

* Persons using this information are cautioned that the materials shown are determined by the equipment noted and accuracy of the "log of materials" is limited thereby and by judgement of the operator. THIS INFORMATION IS FOR DESIGN PURPOSES ONLY.

LETTER BOREHOLE - MODOT 20150728.GDT - 7/31/25 12:09 - N:\LABORATORY\ACTIVE GINT PROJECTS\2025-0017.10 PERCHE CREEK MODOT.GPJ

STATE OF MISSOURI
MARTIN ALAN THORNE
NUMBER PE-2013006488
PROFESSIONAL ENGINEER
4-2-26

DATE PREPARED 2-SEP-2026
ROUTE I-70 | STATE MO
DISTRICT BR | SHEET NO. BR05-43
COUNTY BOONE
JOB NUMBER JST0017
CONTRACT ID. 251203-D01
PROJECT NO. IS 70-2(128)
BRIDGE NO. A9820

REV	DATE	DESCRIPTION
0	090426	RFC BRIDGE A9820

IF A SEAL IS PRESENT ON THIS SHEET IT HAS BEEN ELECTRONICALLY SEALED AND DATED.

MISSOURI HIGHWAYS AND TRANSPORTATION COMMISSION
105 WEST CAPITOL
JEFFERSON CITY, MO 65102
1-888-ASK-MODOT (1-888-275-6636)

IMPROVE I-70 ROCHEPORT TO COLUMBIA

HORNER SHIFRIN
THE POWER OF BEING UNDERSTOOD
401 S. 18th St., Ste. 400
St. Louis, Missouri 63103
314-531-4321 FAX 314-531-8966
www.HornerShifrin.com

EMERY SAPPS SONS, INC

MO STATE CERTIFICATE OF AUTHORITY #000159 ENGINEERING

REV. RevDesc

BORING DATA

Designed MAC APR 2026
Detailed CAB APR 2026
Checked TPL JUL 2026

Note: For locations of borings, see Sheet No. 1.
Note: This drawing is not to scale. Follow dimensions.

B_JST0017_A9820_43_Boring Log 3.dgn 1:02:40 AM Eastern 2-SEP-2026

09/08/2026
Released for Construction

Missouri Department of Transportation
Construction and Materials

BORING NO. B-3N
Page 2 of 3

Job No.: ST0017 (SCI No. 2025-0017.10) **County:** Boone **Route:** 70 Outer Roads
Design: **Skew:** **Location:** Columbia, Missouri
Bent: **Logged By:** Ian Aubuchon **Operator:** Palmerton and Parrish, Inc.
Station: **Northing:** 1142615.528 **Date of Work:** 05/08/25
Offset: **Easting:** 1665697.456 **Depth to Water:** 8.0
Elevation: 583.4 **Requested Northing:** **Depth Hole Open:** 72.0
Requested Station: **Requested Easting:** **Time Change:**
Requested Offset: **Equipment:** CME-55,Split-Spoon Sampler, Shelby Tube, NQ
Requested Elevation: **Location Note:**
Drill No.: **Hammer Efficiency:** 84.7% **Drilling Method:** Continuous Flight Auger, Mud rotary

Depth (ft)	Graphic	Description	Elevation (ft)	Sample Type	REC % (RQD %)	Blow Counts (N_{60})	Shear Data	Field Tests	Index Tests
35									
40		37.0-41.5' (CL) Gray, SANDY LEAN CLAY, sand is fine- to coarse-grained	545		39	4-5-6 (16)			MC = 37.8%
45		41.5-46.9' (SP) Gray, POORLY GRADED SAND WITH GRAVEL, fine- to coarse-grained, gravel is fine	540		33	4-4-4 (11)			
50		46.9-72.9' LIMESTONE: Gray, hard, finely crystalline to micritic, thin bedding, moderately weathered, dense 50.0' Thick bedding, slightly weathered	535		100 (13)		Qu Test Results UCS = 1050 ksf MC = 0% γ_{moist} = 165.5 pcf		
55			530		100 (87)				
60			525		100 (90)		Qu Test Results UCS = 1110 ksf MC = 0% γ_{moist} = 159.4 pcf		
65		62.0' Massive bedding	520		98 (93)		Qu Test Results UCS = 1050 ksf MC = 0% γ_{moist} = 166.6 pcf		
70		67.0' Thick bedding	515		97 (83)		Qu Test Results UCS = 2000 ksf MC = 0% γ_{moist} = 165.3 pcf		

N_{60} = (Em/60)Nm N_{60} - Corrected N value for standard 60% SPT efficiency; Em - Measured hammer efficiency in percent; Nm - Observed N-value
(1) = Assumed, (2) = Actual

Coordinate System: Modified U.S. State Plane 1988 **Coordinate Zone:** Missouri Central **Coordinate Proj. Factor:** 1.00000000
Coordinate Datum: NAD 88 (CONUS) **Coordinate Units:** U.S. Survey Feet

* Persons using this information are cautioned that the materials shown are determined by the equipment noted and accuracy of the "log of materials" is limited thereby and by judgement of the operator. THIS INFORMATION IS FOR DESIGN PURPOSES ONLY.

LETTER BOREHOLE - MODOT 20150728.GDT - 7/31/25 12:09 - N:\LABORATORY\ACTIVE GINT PROJECTS\2025-0017.10 PERCHE CREEK MODOT.GPJ

Missouri Department of Transportation
Construction and Materials

BORING NO. B-3N
Page 3 of 3

Job No.: ST0017 (SCI No. 2025-0017.10) **County:** Boone **Route:** 70 Outer Roads
Design: **Skew:** **Location:** Columbia, Missouri
Bent: **Logged By:** Ian Aubuchon **Operator:** Palmerton and Parrish, Inc.
Station: **Northing:** 1142615.528 **Date of Work:** 05/08/25
Offset: **Easting:** 1665697.456 **Depth to Water:** 8.0
Elevation: 583.4 **Requested Northing:** **Depth Hole Open:** 72.0
Requested Station: **Requested Easting:** **Time Change:**
Requested Offset: **Equipment:** CME-55,Split-Spoon Sampler, Shelby Tube, NQ
Requested Elevation: **Location Note:**
Drill No.: **Hammer Efficiency:** 84.7% **Drilling Method:** Continuous Flight Auger, Mud rotary

Depth (ft)	Graphic	Description	Elevation (ft)	Sample Type	REC % (RQD %)	Blow Counts (N_{60})	Shear Data	Field Tests	Index Tests
70		46.9-72.9' LIMESTONE: Gray, hard, finely crystalline to micritic, thin bedding, moderately weathered, dense *(continued)* 70.0' Medium bedding Refusal at 46.9 feet. Bottom of borehole at 72.9 feet.			100 (91)		Qu Test Results UCS = 1170 ksf MC = 0% γ_{moist} = 165 pcf		

N_{60} = (Em/60)Nm N_{60} - Corrected N value for standard 60% SPT efficiency; Em - Measured hammer efficiency in percent; Nm - Observed N-value
(1) = Assumed, (2) = Actual

Coordinate System: Modified U.S. State Plane 1988 **Coordinate Zone:** Missouri Central **Coordinate Proj. Factor:** 1.00000000
Coordinate Datum: NAD 88 (CONUS) **Coordinate Units:** U.S. Survey Feet

* Persons using this information are cautioned that the materials shown are determined by the equipment noted and accuracy of the "log of materials" is limited thereby and by judgement of the operator. THIS INFORMATION IS FOR DESIGN PURPOSES ONLY.

LETTER BOREHOLE - MODOT 20150728.GDT - 7/31/25 12:09 - N:\LABORATORY\ACTIVE GINT PROJECTS\2025-0017.10 PERCHE CREEK MODOT.GPJ

STATE OF MISSOURI
MARTIN ALAN THORIE
NUMBER PE-2013006488
PROFESSIONAL ENGINEER
4-30-27

DATE PREPARED 2-SEP-2026
ROUTE I-70 | STATE MO
DISTRICT BR | SHEET NO. BR05-44
COUNTY BOONE
JOB NUMBER JST0017
CONTRACT ID. 251203-D01
PROJECT NO. IS 70-2(128)
BRIDGE NO. A9820

DESCRIPTION: RFC BRIDGE A9820

REV	DATE
0	090426

IF A SEAL IS PRESENT ON THIS SHEET IT HAS BEEN ELECTRONICALLY SEALED AND DATED.

MISSOURI HIGHWAYS AND TRANSPORTATION COMMISSION
105 WEST CAPITOL
JEFFERSON CITY, MO 65102
1-888-ASK-MODOT (1-888-275-6636)

IMPROVE I-70 ROCHEPORT TO COLUMBIA

HORNER SHIFRIN
THE POWER OF EXPERIENCE AND INNOVATION
401 S. 18th St., Ste. 100
St. Louis, MO 63103
314-531-4321 FAX: 314-531-0966
www.hornershifrin.com

EMERY SAPP & SONS, INC

MO STATE CERTIFICATE OF AUTHORITY #000159 ENGINEERING

REV. RevDesc

BORING DATA

Designed MAC APR 2026
Detailed CAB APR 2026
Checked TPL JUL 2026

Note: For locations of borings, see Sheet No. 1.
Note: This drawing is not to scale. Follow dimensions.

B_JST0017_A9820_44_Boring Log 4.dgn 1:02:04 AM Eastern 2-SEP-2026

09/08/2026
Released for Construction

Missouri Department of Transportation
Construction and Materials

BORING NO. B-4N
Page 1 of 3

Job No.: ST0017 (SCI No. 2025-0017.10) **County:** Boone **Route:** 70 Outer Roads
Design: **Skew:** **Location:** Columbia, Missouri
Bent: **Logged By:** Ian Aubuchon **Operator:** Palmerton and Parrish, Inc.
Station: **Northing:** 1142607.375 **Date of Work:** 05/07/25
Offset: **Easting:** 1665876.421 **Depth to Water:** 15.0
Elevation: 585.6 **Requested Northing:** **Depth Hole Open:** 72.5
Requested Station: **Requested Easting:** **Time Change:**
Requested Offset: **Equipment:** CME-55,Split-Spoon Sampler, Shelby Tube, NQ
Requested Elevation: **Location Note:**
Drill No.: **Hammer Efficiency:** 84.7% **Drilling Method:** Continuous Flight Auger, Mud rotary

Depth (ft)	Description	Elevation (ft)	Sample Type	REC % (RQD %)	Blow Counts (N_{60})	Shear Data	Field Tests	Index Tests
0	0.0-0.5' (SP) Brown, POORLY GRADED SAND, fine- to coarse-grained	585						
	0.5-5.5' (ML) Brown, SANDY SILT, sand is fine- to coarse-grained			75		Qu Test Results UCS = 0.400 ksf MC = 15.7% γ_{moist} = 121.5 pcf		LL = 19 PL = 16
5				72	2-2-1 (4)		PP = 0.50 tsf	MC = 18.1%
	5.5-8.0' (ML) Brown, SILT, with fine- to coarse-grained sand	580		100		Qu Test Results UCS = 1.00 ksf MC = 17% γ_{moist} = 125.4 pcf		LL = 22 PL = 18
	8.0-9.8' (CL) Brown, SANDY LEAN CLAY, sand is fine- to coarse-grained			89	3-4-3 (10)			MC = 12.9%
10	9.8-12.0' (SP) Brown, POORLY GRADED SAND, fine- to coarse-grained	575						
	12.0-17.0' (CL) Brown, SANDY LEAN CLAY, sand is fine- to coarse-grained			67	0-0-0 (0)			MC = 27.6%
15	▽	570						
	17.0-32.0' (SP) Brown, POORLY GRADED SAND, fine- to coarse-grained							
20	20.0' Switched to mud rotary	565		56	0-0-1 (1)			
25		560						
30		555		83	1-2-2 (6)			
	32.0-37.0' (CL) Gray, LEAN CLAY, few fine- to coarse-grained sand							
35				100	4-3-3 (8)		PP = 1.50 tsf	MC = 35.6%

N_{60} = (Em/60)Nm N_{60} - Corrected N value for standard 60% SPT efficiency; Em - Measured hammer efficiency in percent; Nm - Observed N-value
(1) = Assumed, (2) = Actual

Coordinate System: Modified U.S. State Plane 1988 **Coordinate Zone:** Missouri Central **Coordinate Proj. Factor:** 1.00000000
Coordinate Datum: NAD 88 (CONUS) **Coordinate Units:** U.S. Survey Feet

* Persons using this information are cautioned that the materials shown are determined by the equipment noted and accuracy of the "log of materials" is limited thereby and by judgement of the operator. THIS INFORMATION IS FOR DESIGN PURPOSES ONLY.

Missouri Department of Transportation
Construction and Materials

BORING NO. B-4N
Page 2 of 3

Job No.: ST0017 (SCI No. 2025-0017.10) **County:** Boone **Route:** 70 Outer Roads
Design: **Skew:** **Location:** Columbia, Missouri
Bent: **Logged By:** Ian Aubuchon **Operator:** Palmerton and Parrish, Inc.
Station: **Northing:** 1142607.375 **Date of Work:** 05/07/25
Offset: **Easting:** 1665876.421 **Depth to Water:** 15.0
Elevation: 585.6 **Requested Northing:** **Depth Hole Open:** 72.5
Requested Station: **Requested Easting:** **Time Change:**
Requested Offset: **Equipment:** CME-55,Split-Spoon Sampler, Shelby Tube, NQ
Requested Elevation: **Location Note:**
Drill No.: **Hammer Efficiency:** 84.7% **Drilling Method:** Continuous Flight Auger, Mud rotary

Depth (ft)	Description	Elevation (ft)	Sample Type	REC % (RQD %)	Blow Counts (N_{60})	Shear Data	Field Tests	Index Tests
35	32.0-37.0' (CL) Gray, LEAN CLAY, few fine- to coarse-grained sand *(continued)*	550						
	37.0-46.0' (SC) Brown, CLAYEY SAND, fine- to coarse-grained, trace fine gravel, clay is lean			67	4-4-6 (14)			Sieve Analysis Sieve# % Passing 3/8-inch 100.0 #4 99.9 #10 98.7 #20 95.0 #40 75.0 #60 34.3 #100 14.8 #140 13.0 #200 12.3
40		545						
45				50	6-6-7 (18)	Qu Test Results UCS = 1570 ksf MC = 0% γ_{moist} = 162.7 pcf		
	46.0-47.5' Weak Rock: Limestone	540		100	50/0.3'			
	47.5-72.5' LIMESTONE: Gray, hard, finely crystalline to micritic, thin bedding, moderately weathered, dense			97 (0)				
50	50.0' Medium bedding, slightly weathered	535				Qu Test Results UCS = 1030 ksf MC = 0% γ_{moist} = 164.8 pcf		
55	55.0' Thick bedding	530		100 (62)				
60	58.0' Massive bedding	525		98 (95)		Qu Test Results UCS = 787 ksf MC = 0% γ_{moist} = 156.9 pcf		
				100 (88)				
65		520						
70				100 (93)		Qu Test Results UCS = 937 ksf MC = 0% γ_{moist} = 163.6 pcf		

N_{60} = (Em/60)Nm N_{60} - Corrected N value for standard 60% SPT efficiency; Em - Measured hammer efficiency in percent; Nm - Observed N-value
(1) = Assumed, (2) = Actual

Coordinate System: Modified U.S. State Plane 1988 **Coordinate Zone:** Missouri Central **Coordinate Proj. Factor:** 1.00000000
Coordinate Datum: NAD 88 (CONUS) **Coordinate Units:** U.S. Survey Feet

* Persons using this information are cautioned that the materials shown are determined by the equipment noted and accuracy of the "log of materials" is limited thereby and by judgement of the operator. THIS INFORMATION IS FOR DESIGN PURPOSES ONLY.

LETTER BOREHOLE - MODOT 20150728.GDT - 7/31/25 12:09 - N:\LABORATORY\ACTIVE GINT PROJECTS\2025-0017.10 PERCHE CREEK MODOT.GPJ

STATE OF MISSOURI
MARTIN ALAN THORNE
NUMBER PE-2013006488
PROFESSIONAL ENGINEER
4-4-26

DATE PREPARED 2-SEP-2026
ROUTE I-70 | STATE MO
DISTRICT BR | SHEET NO. BR05-45
COUNTY BOONE
JOB NUMBER JST0017
CONTRACT ID. 251203-D01
PROJECT NO. IS 70-2(128)
BRIDGE NO. A9820

REV	DATE	DESCRIPTION
0	090426	RFC BRIDGE A9820

IF A SEAL IS PRESENT ON THIS SHEET IT HAS BEEN ELECTRONICALLY SEALED AND DATED.

MISSOURI HIGHWAYS AND TRANSPORTATION COMMISSION
105 WEST CAPITOL
JEFFERSON CITY, MO 65102
1-888-ASK-MODOT (1-888-275-6636)

IMPROVE I-70 ROCHEPORT TO COLUMBIA

HORNER SHIFRIN
THE POWER OF SOLUTIONS
911 Washington Ave., Suite 600
St. Louis, MO 63101-1276
314-621-6522 FAX: 314-621-6866
www.HornerShifrin.com

EMERY SAPPS SONS, INC

MO STATE CERTIFICATE OF AUTHORITY #000159 ENGINEERING

REV. RevDesc

BORING DATA

Designed MAC APR 2026
Detailed CAB APR 2026
Checked TPL JUL 2026

Note: For locations of borings, see Sheet No. 1.
Note: This drawing is not to scale. Follow dimensions.

B_JST0017_A9820_45_Boring Log 5.dgn 1:03:01 AM Eastern 2-SEP-2026

09/08/2026
Released for Construction

Missouri Department of Transportation
Construction and Materials

BORING NO. B-4N
Page 3 of 3

Job No.: ST0017 (SCI No. 2025-0017.10) **County:** Boone **Route:** 70 Outer Roads
Design: **Skew:** **Location:** Columbia, Missouri
Bent: **Logged By:** Ian Aubuchon **Operator:** Palmerton and Parrish, Inc.
Station: **Northing:** 1142607.375 **Date of Work:** 05/07/25
Offset: **Easting:** 1665876.421 **Depth to Water:** 15.0
Elevation: 585.6 **Requested Northing:** **Depth Hole Open:** 72.5
Requested Station: **Requested Easting:** **Time Change:**
Requested Offset: **Equipment:** CME-55,Split-Spoon Sampler, Shelby Tube, NQ
Requested Elevation: **Location Note:**
Drill No.: **Hammer Efficiency:** 84.7% **Drilling Method:** Continuous Flight Auger, Mud rotary

Depth (ft)	Graphic	Description	Elevation (ft)	Sample Type	REC % (RQD %)	Blow Counts (N_{60})	Shear Data	Field Tests	Index Tests
70		47.5-72.5' LIMESTONE: Gray, hard, finely crystalline to micritic, thin bedding, moderately weathered, dense *(continued)*	515		100 (100)		Qu Test Results UCS = 731 ksf MC = 0% γ_{moist} = 161.3 pcf		
		Refusal at 47.5 feet. Bottom of borehole at 72.5 feet.							

N_{60} = (Em/60)Nm N_{60} - Corrected N value for standard 60% SPT efficiency; Em - Measured hammer efficiency in percent; Nm - Observed N-value
(1) = Assumed, (2) = Actual

Coordinate System: Modified U.S. State Plane 1988 **Coordinate Zone:** Missouri Central **Coordinate Proj. Factor:** 1.00000000
Coordinate Datum: NAD 88 (CONUS) **Coordinate Units:** U.S. Survey Feet

* Persons using this information are cautioned that the materials shown are determined by the equipment noted and accuracy of the "log of materials" is limited thereby and by judgement of the operator. THIS INFORMATION IS FOR DESIGN PURPOSES ONLY.

LETTER BOREHOLE - MODOT 20150728.GDT - 7/31/25 12:09 - N:\LABORATORY\ACTIVE GINT PROJECTS\2025-0017.10 PERCHE CREEK MODOT.GPJ

Missouri Department of Transportation
Construction and Materials

BORING NO. B-5N
Page 1 of 1

Job No.: ST0017 (SCI No. 2025-0017.10) **County:** Boone **Route:** 70 Outer Roads
Design: **Skew:** **Location:** Columbia, Missouri
Bent: **Logged By:** Tina Cowan **Operator:** Palmerton and Parrish, Inc.
Station: **Northing:** 1142565.368 **Date of Work:** 05/20/25
Offset: **Easting:** 1666136.83 **Depth to Water:**
Elevation: 607.9 **Requested Northing:** **Depth Hole Open:**
Requested Station: **Requested Easting:** **Time Change:**
Requested Offset: **Equipment:** CME-55,Split-Spoon Sampler, NQ
Requested Elevation: **Location Note:**
Drill No.: **Hammer Efficiency:** 84.7% **Drilling Method:** Continuous Flight Auger

Depth (ft)	Graphic	Description	Elevation (ft)	Sample Type	REC % (RQD %)	Blow Counts (N_{60})	Shear Data	Field Tests	Index Tests
0		0.0-0.2' 2" TOPSOIL							
		0.2-1.0' (CL) Brown, LEAN CLAY			22	3-4-20 (34)			MC = 35.9%
		1.0-2.0' (CH) Brown, FAT CLAY	605						
		2.0-3.0' LIMESTONE BOULDERS AND COBBLES			50	50/0.2'			MC = 25.4%
5		3.0-14.5' LIMESTONE: Gray, hard, finely crystalline to micritic, thin bedding, moderately weathered, pitted			73 (32)				
			600		62 (11)		Qu Test Results UCS = 697 ksf MC = 0% γ_{moist} = 163.1 pcf		
10		12.0' Medium bedding, slightly weathered	595		97 (52)		Qu Test Results UCS = 567 ksf MC = 0% γ_{moist} = 162.3 pcf		
15		14.5-15.5' (CH) Brown, FAT CLAY							
		15.5-20.5' LIMESTONE: Gray, hard, finely crystalline to micritic, medium bedding, moderately weathered, pitted	590		75 (39)				
20		Refusal at 3.0 feet. Bottom of borehole at 20.5 feet.							

N_{60} = (Em/60)Nm N_{60} - Corrected N value for standard 60% SPT efficiency; Em - Measured hammer efficiency in percent; Nm - Observed N-value
(1) = Assumed, (2) = Actual

Coordinate System: Modified U.S. State Plane 1988 **Coordinate Zone:** Missouri Central **Coordinate Proj. Factor:** 1.00000000
Coordinate Datum: NAD 88 (CONUS) **Coordinate Units:** U.S. Survey Feet

* Persons using this information are cautioned that the materials shown are determined by the equipment noted and accuracy of the "log of materials" is limited thereby and by judgement of the operator. THIS INFORMATION IS FOR DESIGN PURPOSES ONLY.

LETTER BOREHOLE - MODOT 20150728.GDT - 7/31/25 12:09 - N:\LABORATORY\ACTIVE GINT PROJECTS\2025-0017.10 PERCHE CREEK MODOT.GPJ

STATE OF MISSOURI
MARTIN ALAN THORNTON
NUMBER PE-2013006488
PROFESSIONAL ENGINEER
4-30-2027

DATE PREPARED
2-SEP-2026

ROUTE	STATE
I-70	MO
DISTRICT	SHEET NO.
BR	BR05-46

COUNTY
BOONE
JOB NUMBER
JST0017
CONTRACT ID.
251203-D01
PROJECT NO.
IS 70-2(128)
BRIDGE NO.
A9820

REV	DATE	DESCRIPTION
0	090426	RFC BRIDGE A9820

IF A SEAL IS PRESENT ON THIS SHEET IT HAS BEEN ELECTRONICALLY SEALED AND DATED.

MISSOURI HIGHWAYS AND TRANSPORTATION COMMISSION
105 WEST CAPITOL
JEFFERSON CITY, MO 65102
1-888-ASK-MODOT (1-888-275-6636)

IMPROVE I-70 ROCHEPORT TO COLUMBIA

HORNER SHIFRIN
HORNER & SHIFRIN, INC.
401 S. 18th St., Ste. 300
ST. LOUIS, MISSOURI 63103
314-531-1420 FAX: 314-531-0966
www.hornershifrin.com

EMERY SAPP& SONS, INC

MO STATE CERTIFICATE OF AUTHORITY #000159 ENGINEERING

REV. RevDesc

BORING DATA

Designed MAC APR 2026
Detailed CAB APR 2026
Checked TPL JUL 2026

Note: For locations of borings, see Sheet No. 1.
Note: This drawing is not to scale. Follow dimensions.

09/08/2026
Released for Construction

Surface Elevation: 601.0 Datum: NAVD88
Completion Date: 7/20/23
Northing: 1142552.95
Easting: 1665274.52

DEPTH IN FEET	ELEVATION IN FEET	DESCRIPTION OF MATERIAL	GRAPHIC LOG	DRY UNIT WEIGHT (pcf) SPT BLOW COUNTS (N60) CORE RECOVERY/RQD	SAMPLES
		Concrete - 10 inches			
		Granular Base - 7 inches			
		(1.4 to 22.0 ft) FILL: medium stiff, brown and gray, lean clay, trace to little gravel		3-3-6 (12)	SS1
				2-2-2 (5)	SS2
5	596.0			3-6-7 (17)	SS3
				2-3-2 (7)	SS4
10	591.0			102	ST5
				3-4-5 (12)	SS6
15	586.0				
				5-10-13 (31)	SS7
20	581.0				
		(22.0 to 32.0 ft) Medium stiff, brown, LEAN CLAY, little sand - CL		2-3-4 (9)	SS8

SHEAR STRENGTH, tsf
Δ - UU/2 ○ - QU/2 □ - PP/2
0.5 1.0 1.5 2.0 2.5

STANDARD PENETRATION RESISTANCE
▲ N-VALUE (BLOWS PER FOOT)
(ASTM D 1586)

WATER CONTENT, %
PL 10 20 30 40 50 LL

NOTE: STRATIFICATION LINES REPRESENT THE APPROXIMATE BOUNDARIES BETWEEN SOIL TYPES AND THE TRANSITION MAY BE GRADUAL. GRAPHIC LOG FOR ILLUSTRATION PURPOSES ONLY.

N60 BORING LOG (WITH PAGE #) B-27 AND B-28.GPJ 00 CLONE ME.GPJ 11/8/23

GROUNDWATER DATA

ENCOUNTERED AT 32 FEET ▽

DRILLING DATA

___ AUGER 3 3/4" HOLLOW STEM
WASHBORING FROM 35 FEET
RR DRILLER VTZ LOGGER
CME 55HTX DRILL RIG
HAMMER TYPE Auto
HAMMER EFFICIENCY 80 %

REMARKS:
Rough drilling observed at 60 feet.

Drawn by: VTZ	Checked by: CKK	App'vd. by: CKK
Date: 8/1/23	Date: 11/8/23	Date: 11/8/23

GEOTECHNOLOGY
A Universal Engineering Sciences Company

I-70 Improvements
I-70 over Perche Creek
Boone County, Missouri

LOG OF BORING: B-27
Page 1 of 4

Project No. J036741.01

Surface Elevation: 601.0 Datum: NAVD88
Completion Date: 7/20/23
Northing: 1142552.95
Easting: 1665274.52

DEPTH IN FEET	ELEVATION IN FEET	DESCRIPTION OF MATERIAL	GRAPHIC LOG	DRY UNIT WEIGHT (pcf) SPT BLOW COUNTS (N60) CORE RECOVERY/RQD	SAMPLES
		(22.0 to 32.0 ft) Medium stiff, brown, LEAN CLAY, little sand - CL *(continued)*			
30	571.0	83% passing #200 sieve		2-3-2 (7)	SS9
		(32.0 to 47.0 ft) Medium dense, gray, poorly-graded SAND, trace silt - SP		4-4-6 (13)	SS10
35	566.0			6-8-5 (17)	SS11
40	561.0			8-8-5 (17)	SS12
45	556.0	(47.0 to 52.0 ft) Soft, gray SILT and sand -MH		3-1-1 (3)	SS13
		55% passing #200 sieve			

SHEAR STRENGTH, tsf
Δ - UU/2 ○ - QU/2 □ - PP/2
0.5 1.0 1.5 2.0 2.5

STANDARD PENETRATION RESISTANCE
▲ N-VALUE (BLOWS PER FOOT)
(ASTM D 1586)

WATER CONTENT, %
PL 10 20 30 40 50 LL

NOTE: STRATIFICATION LINES REPRESENT THE APPROXIMATE BOUNDARIES BETWEEN SOIL TYPES AND THE TRANSITION MAY BE GRADUAL. GRAPHIC LOG FOR ILLUSTRATION PURPOSES ONLY.

N60 BORING LOG (WITH PAGE #) B-27 AND B-28.GPJ 00 CLONE ME.GPJ 11/8/23

GROUNDWATER DATA

ENCOUNTERED AT 32 FEET ▽

DRILLING DATA

___ AUGER 3 3/4" HOLLOW STEM
WASHBORING FROM 35 FEET
RR DRILLER VTZ LOGGER
CME 55HTX DRILL RIG
HAMMER TYPE Auto
HAMMER EFFICIENCY 80 %

REMARKS:
Rough drilling observed at 60 feet.

Drawn by: VTZ	Checked by: CKK	App'vd. by: CKK
Date: 8/1/23	Date: 11/8/23	Date: 11/8/23

GEOTECHNOLOGY
A Universal Engineering Sciences Company

I-70 Improvements
I-70 over Perche Creek
Boone County, Missouri

LOG OF BORING: B-27
Page 2 of 4

Project No. J036741.01

BORING DATA

Designed MAC JUL 2026
Detailed SLF JUL 2026
Checked TPL JUL 2026

Note: For locations of borings, see Sheet No. 1.
Note: This drawing is not to scale. Follow dimensions.

B_JST0017_A9820_47_Boring Log 7.dgn 1:01:59 AM Eastern 2-SEP-2026

STATE OF MISSOURI
MARTIN ALAN THORNE
NUMBER PE-2013006488
PROFESSIONAL ENGINEER
4-1-26

DATE PREPARED 2-SEP-2026
ROUTE I-70 STATE MO
DISTRICT BR SHEET NO. BR05-47
COUNTY BOONE
JOB NUMBER JST0017
CONTRACT ID. 251203-D01
PROJECT NO. IS 70-2(128)
BRIDGE NO. A9820

REV	DATE	DESCRIPTION
0	090426	RFC BRIDGE A9820

IF A SEAL IS PRESENT ON THIS SHEET IT HAS BEEN ELECTRONICALLY SEALED AND DATED.

MISSOURI HIGHWAYS AND TRANSPORTATION COMMISSION
105 WEST CAPITOL
JEFFERSON CITY, MO 65102
1-888-ASK-MODOT (1-888-275-6636)

IMPROVE I-70 ROCHEPORT TO COLUMBIA

HORNER & SHIFRIN
The Professional Engineering Corporation
401 S. 18th St., Ste. 400
St. Louis, MO 63103
314-531-1420 FAX: 314-531-0666
www.HornerShifrin.com

EMERY SAPP& SONS, INC

MO STATE CERTIFICATE OF AUTHORITY #000159 ENGINEERING

REV: RevDesc

09/08/2026
Released for Construction

Surface Elevation: 601.0 Datum: NAVD88
Completion Date: 7/20/23 Northing: 1142552.95 Easting: 1665274.52

DEPTH IN FEET	ELEVATION IN FEET	DESCRIPTION OF MATERIAL	GRAPHIC LOG	DRY UNIT WEIGHT (pcf) SPT BLOW COUNTS (N60) CORE RECOVERY/RQD	SAMPLES
		(47.0 to 52.0 ft) Very loose, gray SILT and sand - MH *(continued)*			
55	546.0	(52.0 to 68.5 ft) Dense to very dense, brown and gray, poorly-graded SAND and gravel, trace clay - SP		12-14-12 (35)	SS14
				13-17-27 (59)	SS15
60	541.0			24-22-25 (63)	SS16
				20-23-20 (57)	SS17
65	536.0				
70	531.0	(68.5 to 68.8 ft) Core Loss - 3 inches (sand washout)		75% 33%	NQ1
		(68.8 to 79.4 ft) Very strong, gray, finely crystalline, thin to thick bedded, unweathered LIMESTONE		100% 65%	NQ2
		unconfined compressive strength = 18,155 psi (2,614 ksf)			

SHEAR STRENGTH, tsf
Δ - UU/2 ○ - QU/2 □ - PP/2
0.5 1.0 1.5 2.0 2.5
STANDARD PENETRATION RESISTANCE
▲ N-VALUE (BLOWS PER FOOT) (ASTM D 1586)
WATER CONTENT, %
PL LL
10 20 30 40 50

NOTE: STRATIFICATION LINES REPRESENT THE APPROXIMATE BOUNDARIES BETWEEN SOIL TYPES AND THE TRANSITION MAY BE GRADUAL. GRAPHIC LOG FOR ILLUSTRATION PURPOSES ONLY.

N60 BORING LOG (WITH PAGE #) B-27 AND B-28.GPJ 00 CLONE ME.GPJ 11/8/23

GROUNDWATER DATA

ENCOUNTERED AT 32 FEET ▽

DRILLING DATA

___ AUGER 3 3/4" HOLLOW STEM
WASHBORING FROM 35 FEET
RR DRILLER VTZ LOGGER
CME 55HTX DRILL RIG
HAMMER TYPE Auto
HAMMER EFFICIENCY 80 %

REMARKS:
Rough drilling observed at 60 feet.

Drawn by: VTZ	Checked by: CKK	App'vd. by: CKK
Date: 8/1/23	Date: 11/8/23	Date: 11/8/23

GEOTECHNOLOGY
A Universal Engineering Sciences Company

I-70 Improvements
I-70 over Perche Creek
Boone County, Missouri

LOG OF BORING: B-27
Page 3 of 4

Project No. J036741.01

Surface Elevation: 601.0 Datum: NAVD88
Completion Date: 7/20/23 Northing: 1142552.95 Easting: 1665274.52

DEPTH IN FEET	ELEVATION IN FEET	DESCRIPTION OF MATERIAL	GRAPHIC LOG	DRY UNIT WEIGHT (pcf) SPT BLOW COUNTS (N60) CORE RECOVERY/RQD	SAMPLES
		(68.8 to 79.4 ft) Very strong, gray, finely crystalline, thin to thick bedded, unweathered LIMESTONE *(continued)*		98% 97%	NQ3
80	521.0	unconfined compressive strength = 16,062 psi (2,313 ksf)			
		(79.4 to 79.5 ft) Core Loss - 1 inch (rock core not recovered)		98% 78%	NQ4
		(79.5 to 83.6 ft) Strong, gray, very finely crystalline, thin to medium bedded, unweathered LIMESTONE, little chert nodules/seams			
85	516.0	(83.6 to 83.7 ft) Core Loss - 1 inch (rock core not recovered)		100% 92%	NQ5
		(83.7 to 93.5 ft) limestone cont. unconfined compressive strength = 13,913 psi (2,003 ksf)			
		unconfined compressive strength = 7,598 psi (1,094 ksf)			
90	511.0	unconfined compressive strength = 12,305 psi (1,772 ksf)		100% 92%	NQ6
95	506.0	Boring terminated at 93.5 feet.			

SHEAR STRENGTH, tsf
Δ - UU/2 ○ - QU/2 □ - PP/2
0.5 1.0 1.5 2.0 2.5
STANDARD PENETRATION RESISTANCE
▲ N-VALUE (BLOWS PER FOOT) (ASTM D 1586)
WATER CONTENT, %
PL LL
10 20 30 40 50

NOTE: STRATIFICATION LINES REPRESENT THE APPROXIMATE BOUNDARIES BETWEEN SOIL TYPES AND THE TRANSITION MAY BE GRADUAL. GRAPHIC LOG FOR ILLUSTRATION PURPOSES ONLY.

N60 BORING LOG (WITH PAGE #) B-27 AND B-28.GPJ 00 CLONE ME.GPJ 11/8/23

GROUNDWATER DATA

ENCOUNTERED AT 32 FEET ▽

DRILLING DATA

___ AUGER 3 3/4" HOLLOW STEM
WASHBORING FROM 35 FEET
RR DRILLER VTZ LOGGER
CME 55HTX DRILL RIG
HAMMER TYPE Auto
HAMMER EFFICIENCY 80 %

REMARKS:
Rough drilling observed at 60 feet.

Drawn by: VTZ	Checked by: CKK	App'vd. by: CKK
Date: 8/1/23	Date: 11/8/23	Date: 11/8/23

GEOTECHNOLOGY
A Universal Engineering Sciences Company

I-70 Improvements
I-70 over Perche Creek
Boone County, Missouri

LOG OF BORING: B-27
Page 4 of 4

Project No. J036741.01

STATE OF MISSOURI
MARTIN ALAN THORNTON
NUMBER PE-2013006488
PROFESSIONAL ENGINEER
4

DATE PREPARED
2-SEP-2026

ROUTE	STATE
I-70	MO
DISTRICT	SHEET NO.
BR	BR05-48

COUNTY
BOONE
JOB NUMBER
JST0017
CONTRACT ID.
251203-D01
PROJECT NO.
IS 70-2(128)
BRIDGE NO.
A9820

REV	DATE	DESCRIPTION
0	090426	RFC BRIDGE A9820

IF A SEAL IS PRESENT ON THIS SHEET IT HAS BEEN ELECTRONICALLY SEALED AND DATED.

MISSOURI HIGHWAYS AND TRANSPORTATION COMMISSION
105 WEST CAPITOL
JEFFERSON CITY, MO 65102
1-888-ASK-MODOT (1-888-275-6636)

IMPROVE I-70 ROCHEPORT TO COLUMBIA

HORNER SHIFRIN
HORNER & SHIFRIN, INC.
401 S. 18th St., Ste. 300
St. Louis, MO 63103
314-531-4320 FAX: 314-531-0966
www.HornerShifrin.com

EMERY SAPP & SONS, INC

MO STATE CERTIFICATE OF AUTHORITY #000159 ENGINEERING

REV. RevDesc

BORING DATA

Designed MAC JUL 2026
Detailed SLF JUL 2026
Checked TPL JUL 2026

Note: For locations of borings, see Sheet No. 1.
Note: This drawing is not to scale. Follow dimensions.

B_JST0017_A9820_48_Boring Log 8.dgn 1:02:01 AM Eastern 2-SEP-2026