STATE	PROJECT NO.	YEAR	SHEET NO.	TOTAL SHEETS
KANSAS	073 C-5357-01	2026	1	36

Federal Aid Proj. No. STP-C535(701)

STATE OF KANSAS

DEPARTMENT OF TRANSPORTATION

PLAN AND PROFILE OF PROPOSED

073 C-5357-01

FEDERAL AID PROJECT

PAWNEE COUNTY

GRADING
BRIDGE
SEEDING

INDEX OF SHEETS

1. TITLE SHEET
2. TYPICAL SECTION
3. PLAN & PROFILE
4-6. GUARDRAIL
7. GENERAL NOTES AND QUANTITIES
8. CONTOUR MAP
9. CONSTRUCTION LAYOUT
10. GEOLOGY
11-12. BRIDGE DETAILS
13. BILL OF REINFORCING STEEL AND BENDING DIAGRAM
14. BRIDGE EXCAVATION
15. STANDARD PILE DETAILS
16. SUPPORTS AND SPACERS FOR REINFORCING STEEL
17. SUMMARY OF QUANTITIES
18-26. TEMPORARY EROSION AND POLLUTION CONTROL
27. PERMANENT SEEDING
28-32. TRAFFIC CONTROL
33-36. CROSS SECTIONS

Sta. 51+25.00 END
KDOT Project 073 C-5357-01

Sta. 49+75.00
Br. No. 000730633605440 (OS 88)
40'-0" Precast Concrete Beam
Bridge (YBMS)
28'-0" Roadway

Sta. 47+00.00 BEGIN
KDOT Project 073 C-5357-01

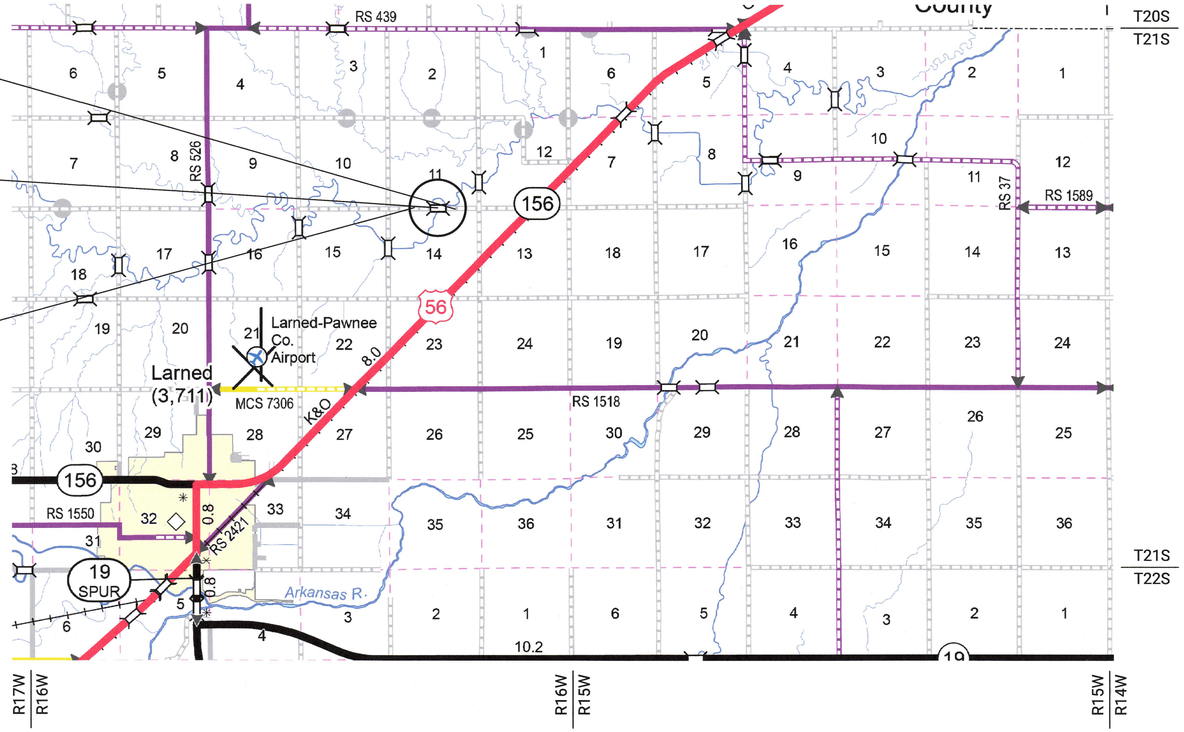

DESIGN DESIGNATION

AADT (2021)	20
AADT (2045)	25
DHV	
D	
T	
V	55 MPH
C of A	
Clear Zone	

This Project meets the Requirements for the VLVLR Design Guidelines.

CONVENTIONAL SIGNS

COUNTY LINE
CITY LIMITS
STATE OR NATIONAL LINE
TOWNSHIP, SECTION or GRANT LINE
PROPERTY LINE
HIGHWAY FENCE
EXISTING FENCE
GUARDRAIL
CONSTRUCTION LIMITS
RIGHT OF WAY LINE
TRAVELED WAY
RAILROADS
CENTER LINE OF PROJECT
TERRACE
CULVERTS
DROP INLET & STORM SEWER
ACCESS CONTROL
POWER POLE
TELEPHONE POLE
MARSH
HEDGE
TREES
PROFILE ELEVATION
STREAM or CREEK

GROSS LENGTH OF PROJECT	425.00 FT. (Includes Equations)	
EXCEPTIONS	NONE	
ADDITIONS	NONE	
NET LENGTH OF PROJECT	425.00 FT.	0.080 MILES
NET LENGTH OF BRIDGES	40.00 FT.	0.008 MILES
NET LENGTH OF ROAD	385.00 FT.	0.072 MILES

NOTE: This project will be closed to all traffic during construction.

Pawnee County

RECOM. FOR APPROVAL-DATE 4-8-26

LOCAL PUBLIC OFFICIAL

NO SCALE

JOSHUA A. DLABAL
LICENSED
25983
04-04-2026
KANSAS
PROFESSIONAL ENGINEER

KIRKHAM MICHAEL

217 N. Douglas, ELLSWORTH, KANSAS 67439
(785) 472-3163 FAX (785) 472-3817

Approved: Apr 16, 2026
Date

State Transportation Engineer

By:

Chief, Bureau of Local Projects

KANSAS DEPARTMENT OF TRANSPORTATION

Plotted by : jdlabal 8-APR-2026 08:39
File : KDOT_LocalProject_rti.dgn

STATE	PROJECT NO.	YEAR	SHEET NO.	TOTAL SHEETS
KANSAS	073 C-5357-01	2026	2	36

Pawnee County will place Light Type Surfacing on the roadway after completion of the project.

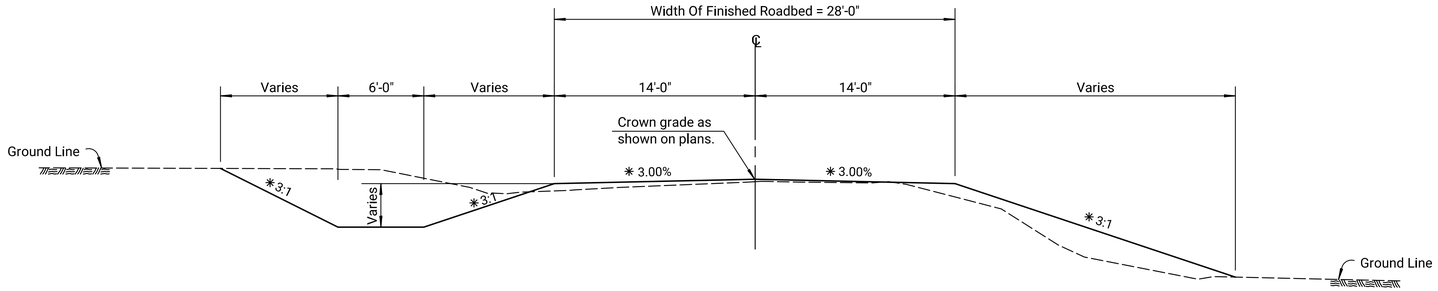

CUT SECTION

TYPICAL SECTION

Sta. 47+00.00 to Sta. 49+55.00
Sta. 49+95.00 to Sta. 51+25.00

FILL SECTION

GENERAL NOTES

All signs shown on the plans, and other signs furnished and installed by the LPA with their own forces and funds will be installed in conformance with the Manual on Uniform Traffic Control Devices (latest edition).

LPA to furnish all easements and additional right of way (unless otherwise noted).

Public and private utility facilities will be adjusted by others as needed to fit the new construction unless noted otherwise on the plans or in the proposal.

✳Dimensions and slopes for standard ditches and fills. See plan and cross-sections for variations.

Note: Intersection of all slope lines shall be softened and rounded for pleasing appearance.

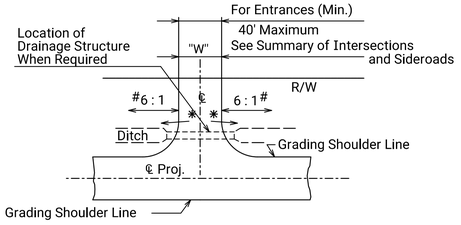

TYPICAL SIDE ROAD OR ENTRANCE DETAIL

✳ On side roads and entrances which slope toward the roadway, construct a low point approx. 6" deep to divert surface drainage into the roadway ditch.

On ditch plugs and side roads or entrances without drainage structures use 8 : 1 slopes where feasible.

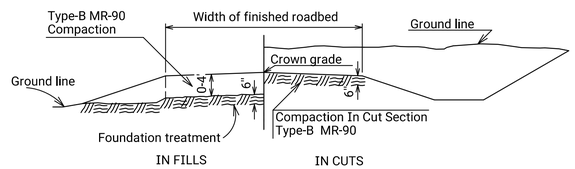

ALL EMBANKMENT SHALL BE COMPACTED EXCEPT DITCHPLUGS AND WASTE BERMS.

FOUNDATION TREATMENT AND COMPACTION OF EARTHWORK

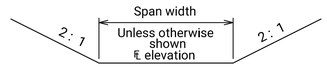

TYPICAL INLET AND OUTLET CHANNEL EXCAVATION SECTION FOR BOX STRUCTURES & PIPE CULVERTS

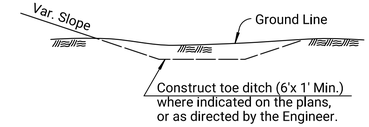

OBJECT MARKER

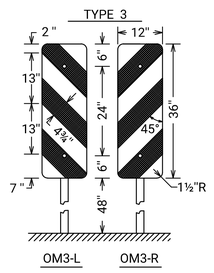

All Sign, Fastener, and Post materials must meet the requirements of the latest edition of the KDOT Standard Specifications for State Road and Bridge Construction.

Install Object Markers Type OM3-(R)(L) at each corner of all span bridges and when indicated on the plans at box structures. Install with the inside edge of the marker in line with the inside clearance line of the structure.

SUMMARY OF OBJECT MARKERS AND SIGNS

STATION TO STATION	SIDE	TYPE OF STRUCT.	TYPE OF SIGN	OBJECT MARKER TYPE	OBJECT MARKER NO.	REMARKS
See RD 618 (Sheet 5) for OM3 placement on Guardrail Ends						
ø As you face bridge end from approach						
✳Back-to-Back [Sign(s) on Both Sides of Post]						

KANSAS DEPARTMENT OF TRANSPORTATION

TYPICAL GRADING SECTION

Plotted by : jdlabal 8-APR-2026 08:40
File : 2410800 Typical Section.dgn

STATE	PROJECT NO.	YEAR	SHEET NO.	TOTAL SHEETS
KANSAS	073 C-5357-01	2026	3	36

UTILITIES

Fiber Optic	Golden Belt Telephone	Chris Grandy	785-259-3429
Power	Midwest Energy	Eathan Alan	620-402-4622
Phone	AT&T	Mitch Brenner	620-338-6267

P.O.T. Sta. 43+00.00
N = 539,895.276' E = 15,542,715.404'
1. Not Set

P.I. Sta. 47+00.00
N = 539,896.176' E = 15,543,115.403'
1. Not Set

P.O.T. Sta. 55+00.00
N = 539,898.957' E = 15,543,915.398'
1. Not Set

C.P. #1
26.41' Lt. Sta. 44+59.48
N 539,922.046' E 15,542,874.821'
1. Set 5/8" Rebar at TOB
2. App. ℄ of Road — 29.3 'S
3. Crop line S. of Road R. — 57.0' S
4. Crop line — 0.5' N

C.P. #2
38.21' Rt. Sta. 50+90.08
N 539,859.325' E 15,543,505.617'
1. Set 5/8" Rebar and Cap at surface
2. Top of steel Cor. fence post — 13.0' NE
3. E face of PP — 18.5' NW
4. App. ℄ of Road R. — 37.2' N

C.P. #3
35.74' Lt. Sta. 59+06.22
N 539,936.112' E 15,544,321.492'
1. Set 5/8" Rebar and Cap at surface
2. App. ℄ of Road R. — 38.8' S
3. Fenceline running E - W — 66.6' S
4. Set spike/washer on top of CO. Post — 33.4' E

SCALE
PLAN: Lat. & Long. 50' 0 50' 100'

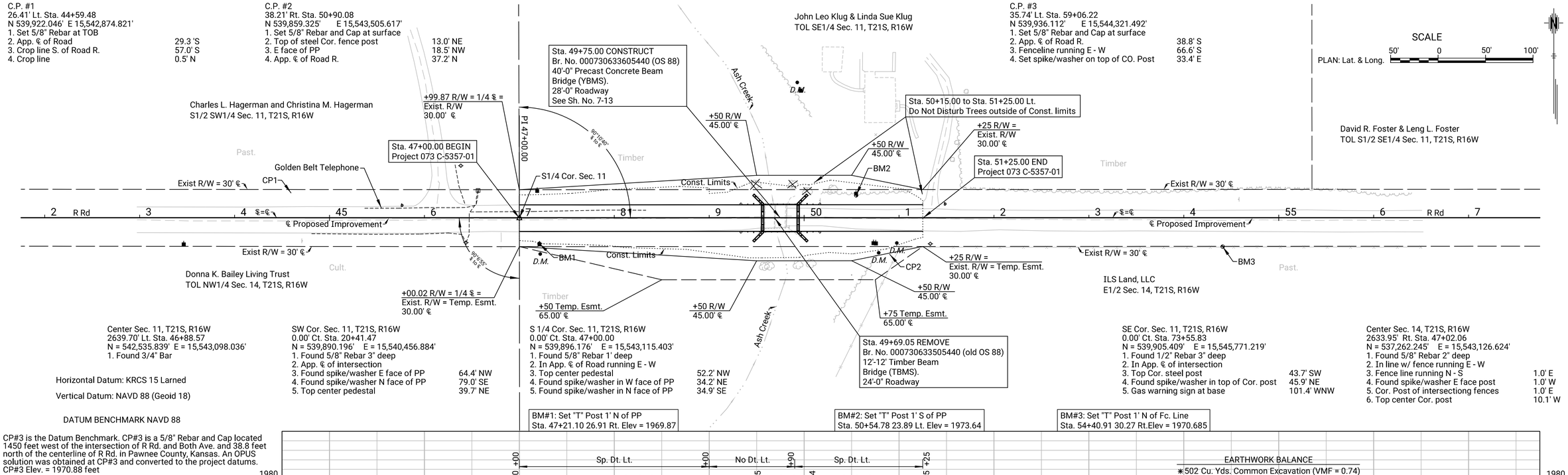

Center Sec. 11, T21S, R16W
2639.70' Lt. Sta. 46+88.57
N = 542,535.839' E = 15,543,098.036'
1. Found 3/4" Bar

SW Cor. Sec. 11, T21S, R16W
0.00' Ct. Sta. 20+41.47
N = 539,890.196' E = 15,540,456.884'
1. Found 5/8" Rebar 3" deep
2. App. ℄ of intersection
3. Found spike/washer E face of PP — 64.4' NW
4. Found spike/washer N face of PP — 79.0' SE
5. Top center pedestal — 39.7' NE

S 1/4 Cor. Sec. 11, T21S, R16W
0.00' Ct. Sta. 47+00.00
N = 539,896.176' E = 15,543,115.403'
1. Found 5/8" Rebar 1' deep
2. In App. ℄ of Road running E - W
3. Top center pedestal — 52.2' NW
4. Found spike/washer in W face of PP — 34.2' NE
5. Found spike/washer in N face of PP — 34.9' SE

SE Cor. Sec. 11, T21S, R16W
0.00' Ct. Sta. 73+55.83
N = 539,905.409' E = 15,545,771.219'
1. Found 1/2" Rebar 3" deep
2. In App. ℄ of intersection
3. Top Cor. steel post — 43.7' SW
4. Found spike/washer in top of Cor. post — 45.9' NE
5. Gas warning sign at base — 101.4' WNW

Center Sec. 14, T21S, R16W
2633.95' Rt. Sta. 47+02.06
N = 537,262.245' E = 15,543,126.624'
1. Found 5/8" Rebar 2" deep
2. In line w/ fence running E - W
3. Fence line running N - S — 1.0' E
4. Found spike/washer E face post — 1.0' W
5. Cor. Post of intersectiong fences — 1.0' E
6. Top center Cor. post — 10.1' W

Horizontal Datum: KRCS 15 Larned

Vertical Datum: NAVD 88 (Geoid 18)

DATUM BENCHMARK NAVD 88

CP#3 is the Datum Benchmark. CP#3 is a 5/8" Rebar and Cap located 1450 feet west of the intersection of R Rd. and Both Ave. and 38.8 feet north of the centerline of R Rd. in Pawnee County, Kansas. An OPUS solution was obtained at CP#3 and converted to the project datums. CP#3 Elev. = 1970.88 feet

CP#3 OPUS Coordinates:
Latitude: 38° 13' 57.29909" N
Longitude: 99° 02' 44.58559" W
Ellipsoid Height: 1,885.423 feet

BM#1: Set "T" Post 1' N of PP
Sta. 47+21.10 26.91 Rt. Elev = 1969.87

BM#2: Set "T" Post 1' S of PP
Sta. 50+54.78 23.89 Lt. Elev = 1973.64

BM#3: Set "T" Post 1' N of Fc. Line
Sta. 54+40.91 30.27 Rt.Elev = 1970.685

EARTHWORK BALANCE
✱502 Cu. Yds. Common Excavation (VMF = 0.74)
186 Cu. Yds. Embankment
✱Includes 250 Cu. Yds. To Be Wasted

The Contractor shall remove the existing 12'-12' Timber Beam Bridge (TBMS) (24'-0" Roadway).
Br. No. 000730633505440 (old OS 88).
The timber stringers and guardrail shall be salvaged in an acceptable condition for the county and stockpiled on county R/W. All other items of the existing structure shall become property of the Contractor and shall be removed from the site.

The Contractor shall excavate the channel at the bridge site to the limits shown prior to construction of the bridge.

The Contractor shall complete the Embankment as shown on the bridge excavation sheet prior to the driving of the abutment piling.

All trees, hedge rows, shelterbelts, and woody shrubs not shown to be removed and located between the construction limits and the right-of-way line or easment line shall be spared unless directed by the Engineer to be removed.

Excavation shown to be wasted shall be wasted on sites provided be the Contractor. These sites shall be approved by the Engineer as to suitability, appearance, and site location. Locations that in the opinion of the Engineer will leave an unsightly appearance will not be approved.

All disposal sites must be approved by the Kansas Department of Health and Environment. Material either stockpiled or disposed of in a flood plain would require a Kansas State Dept. of Agriculture permit. Any material dumped in waters of the United States or wetlands is subject to U.S. Corps of Engineers permitting regulations.

DATE	BY	REFERENCES NOTED	REFERENCES CHECKED
	T. Lesage		
	J. Dlabal		

Plotted by : jdlabal 8-APR-2026 08:40
File : 2410800_rpl-01.dgn

KANSAS DEPARTMENT OF TRANSPORTATION

PLAN AND PROFILE

STA. 45+00 TO STA. 57+00

STATE	PROJECT NO.	YEAR	SHEET NO.	TOTAL SHEETS
KANSAS	073 C-5357-01	2026	4	36

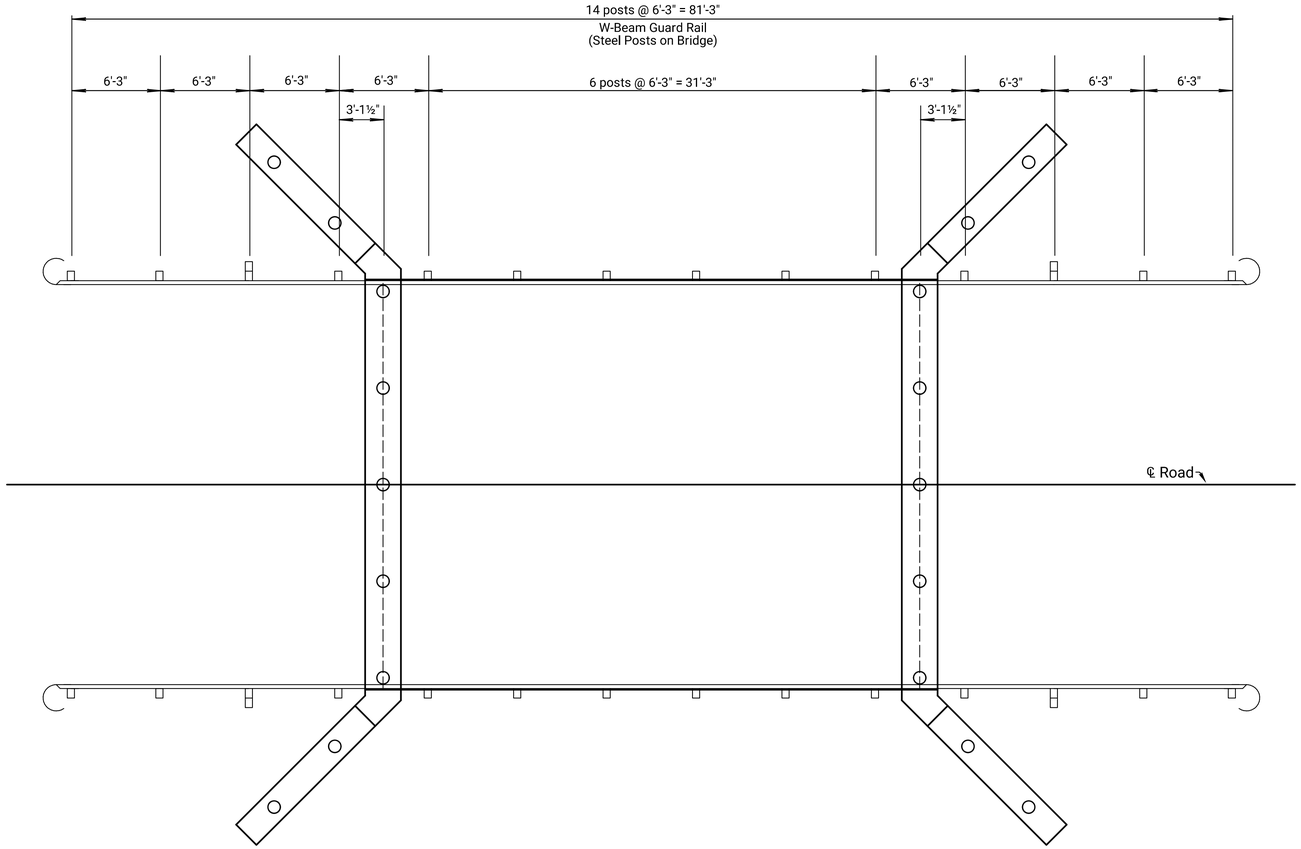

SCALE: 1" = 5'-0"

GENERAL NOTE

The Contractor shall provide shop drawings to install W-beam guardrail on the outside beams. Guardrail posts shall be steel and shall be bolted to the metal base plate cast in the outside beams. Blocks will not be required between the steel posts and the W-beam guardrail across the bridge. All labor, materials, and incidentals necessary to install the guardrail shall be subsidiary to the bid item "Guardrail, Steel Plate".

All guardrail posts are to be galvanized.

Galvanize all steel parts after fabrication.

Lap guardrail splices, including terminal connector, in the direction of traffic. Where traffic is temporarily carried in the opposite direction of final configuration, lap rail splices in the direction of the permanent traffic.

Use galvanized 12 gauge steel rail elements unless otherwise noted. Use galvanized anchor bolts and post rail fittings, see Standard Specifications. Supply guardrail parts that are interchangeable with similar parts regardless of source of manufacturer.

Note: Guardrail located off of the bridge is shown with wood posts. The contractor has the option of providing either standard wood or steel posts. See Standard Drawing RD611 for details.

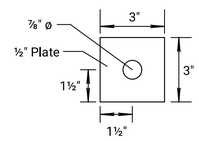

BEARING PLATE

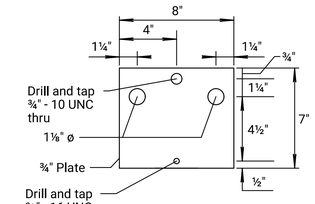

BASE PLATE

SUMMARY OF STEEL PLATE GUARDRAIL				
Location	Side	W-Beam Guardrail Lin. Ft.	Standard Type II End Terminal Each	Total Pay Length Lin. Ft.
Bridge	Lt	81'-3"	2	81'-3"
Bridge	Rt	81'-3"	2	81'-3"
TOTAL			*4	162'-6"

*For Information Only

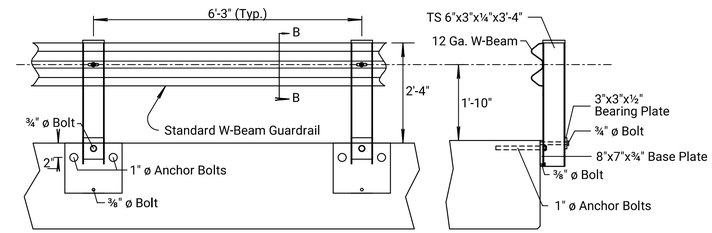

CONNECTION DETAILS

GUARDRAIL LAYOUT

Plotted by : jdlabal 8-APR-2026 08:40
File : 2410800_Guardrail Layout.dgn

STATE	PROJECT NO.	YEAR	SHEET NO.	TOTAL SHEETS
KANSAS	073 C-5357-01	2026	5	36

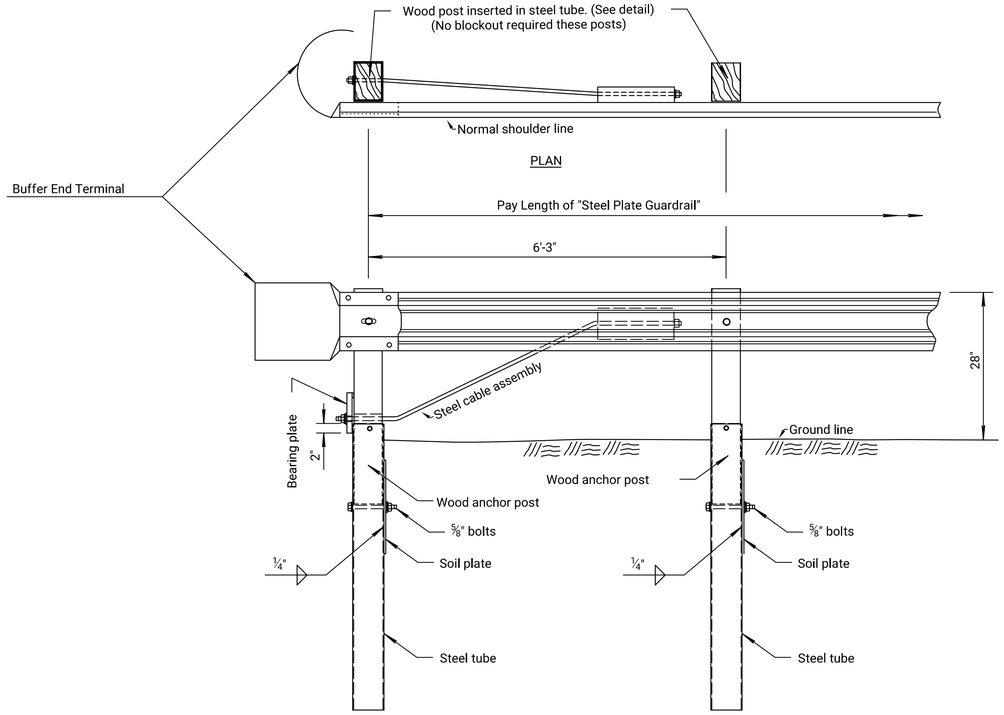

DETAIL OF ANCHOR ASSEMBLY

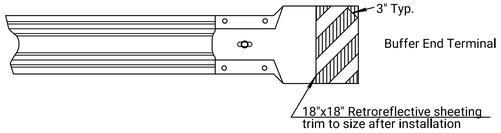

Note: Apply retroreflective sheeting to the buffer end of the terminal after installation. Thoroughly clean and dry steel prior to installation. Locate sheeting to provide maximum visibility to approaching traffic.

GENERAL NOTE

Terminal end posts consist of a wood post inserted into a steel tube see details on this sheet.

The steel soil tubes may be driven with an approved driving head. Set steel tube and soil plate before installing wood anchor post assembly. Do not drive steel soil tubes with wood post in the tube. Backfill and satisfactorily compact around steel soil tubes placed in drilled holes to prevent tube settlement.

Galvanize all steel parts after fabrication.

Lap guardrail splices, including terminal connector, in the direction of traffic. Where traffic is temporarily carried in the opposite direction of final configuration, lap rail splices in the direction of the permanent traffic.

All work and materials required for the installation of Barrier Terminal Type II are considered subsidiary to the bid item "Steel Plate Guardrail".

Include Type II end terminal in pay length of "Steel Plate Guardrail".

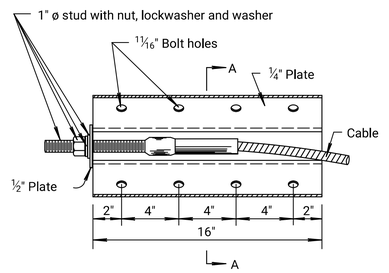

ANCHOR PLATE

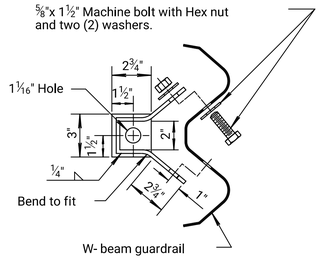

MODIFIED SECTION A-A

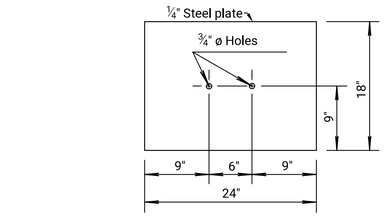

SOIL PLATE

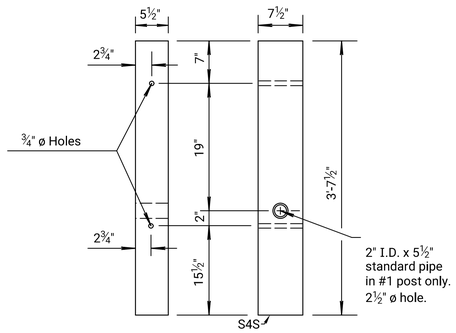

BCT WOOD POST

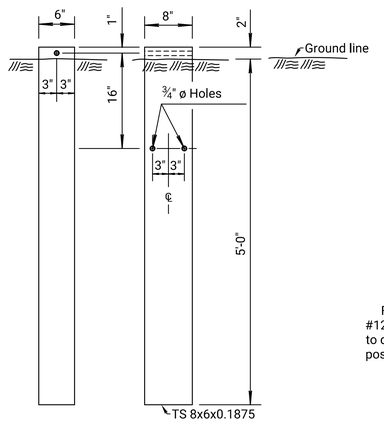

STEEL TUBE

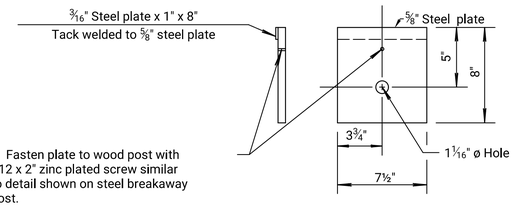

Fasten plate to wood post with #12 x 2" zinc plated screw similar to detail shown on steel breakaway post.

BEARING PLATE

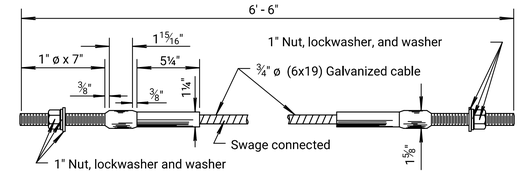

CABLE ASSEMBLY (1 each)

(40,000 lbs. min. breaking strength)
Tighten cable to taut tension.

NO.	DATE	REVISIONS	BY	APP'D
06	12-14-10	Rev. notes, details & 28" rail height	S.W.K.	J.O.B.
05	07-20-04	Changed Guard Fence to Guardrail	S.W.K.	J.O.B.
04	05-18-00	Added note for temporary traffic	R.J.S.	J.O.B.

KANSAS DEPARTMENT OF TRANSPORTATION

GUARDRAIL END TERMINAL TYPE II

~~RD618~~

FHWA APPROVAL	01-11-11	APP'D.	James O. Brewer
DESIGNED	DETAILED	QUANTITIES	TRACED
DESIGN CK.	DETAIL CK.	QUAN.CK.	TRACE CK.

Plotted by : jdlabal 8-APR-2026 08:40
File : rd618.dgn

Notes to Designer: For posts installed in pavement thicker than 8" or posts installed in rock formations refer to AASHTO's Roadside Design Guide for details then revise this drawing and all supporting drawings appropriately.

Plotted by: jdlabal 8-APR-2026 08:40
File : rd611.dgn

STATE	PROJECT NO.	YEAR	SHEET NO.	TOTAL SHEETS
KANSAS	073 C-5357-01	2026	6	36

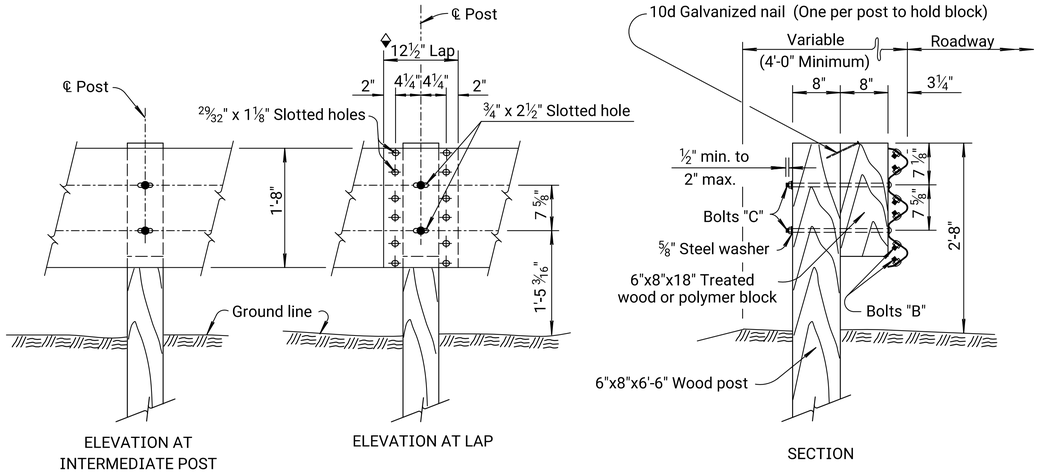

THRIE BEAM POST DETAILS

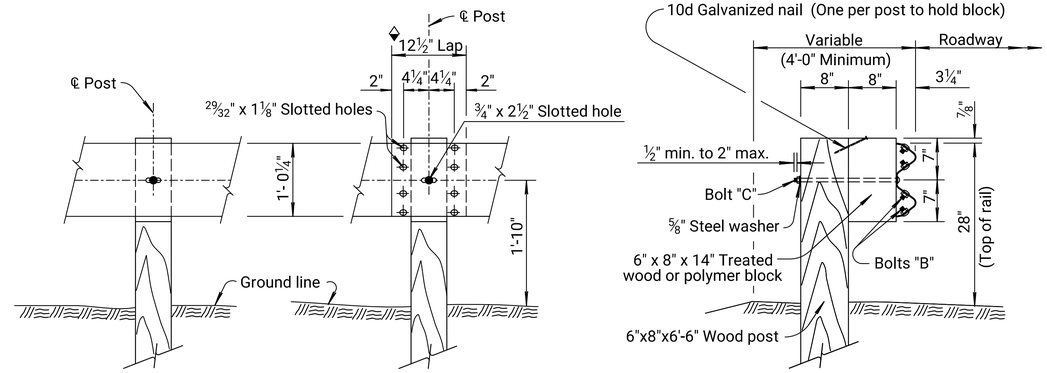

W-BEAM POST DETAILS

◆ Lap guardrail splices, including terminal connector, in the direction of traffic. Where traffic is temporarily carried in the opposite direction of final configuration, lap rail splices in the direction of permanent traffic.

WOOD POSTS

GENERAL NOTES (Wood Posts)

Give all wood posts and wood blocks a preservative treatment, see standard specifications. Thoroughly saturate all cuts, injuries and bolt holes on wood posts and blocks with preservative. Use only one type of preservative treatment on a project. Use S4S rectangular posts and wood blocks, see standard specifications. Use only one post/blockout type within guardrail run, this excludes the the guardrail end terminals. Set guardrail posts by digging or by driving. Use post caps to protect the post from crushing during driving operations. Contractor must notify Engineer at the earliest time when a non-removable manmade object (footing, pipe, etc.) is encountered and prevents installation of a full length post. Contractor must obtain Engineer approval prior to cutting post shorter than 6'-6". Approved polymer blockouts may be substituted for wood blockouts. Only one type of blockout is permitted on each guardrail installation. This excludes the guardrail end terminals unless certified by the manufacturer. All dimensions are nominal and are subject to manufacturing tolerances. Excavation including rock, shale, and other materials for erection of Guardrail is subsidiary to various bid items for which payment is made. Where guardrail posts are installed in pavement, form openings in the pavement for the guardrail posts.

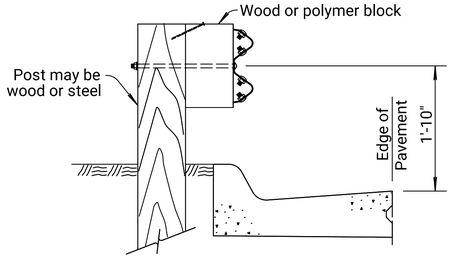

DETAIL OF PLACEMENT AT CURB

Note: When face of guardrail is aligned with the face of a curb, measure the height of rail from the pavement surface at the curb/pavement joint as shown. Use a laydown type curb where the face of the guardrail is not located at the face of the curb.

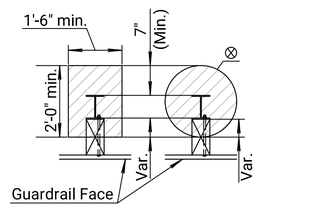

POSTS IN PAVEMENT PLAN
(ALTERNATE GEOMETRIES)
Applies to All Wood and All Steel Posts
(Steel Posts Shown)

▨ Slurry Grout (Low Strength). See KDOT's Standard Specifications

⊗ Diameter may vary from 1'-6" (min.) to 2'-0".

Note: Low Strength Grout must have a 28-day compressive strength of 120 psi or less. All work and materials related to posts in pavement are subsidiary to other guardrail bid items. Rectangular geometry shown in Posts in Pavement detail. Circular geometry, as shown on this sheet, may be used at the Contractor's option.

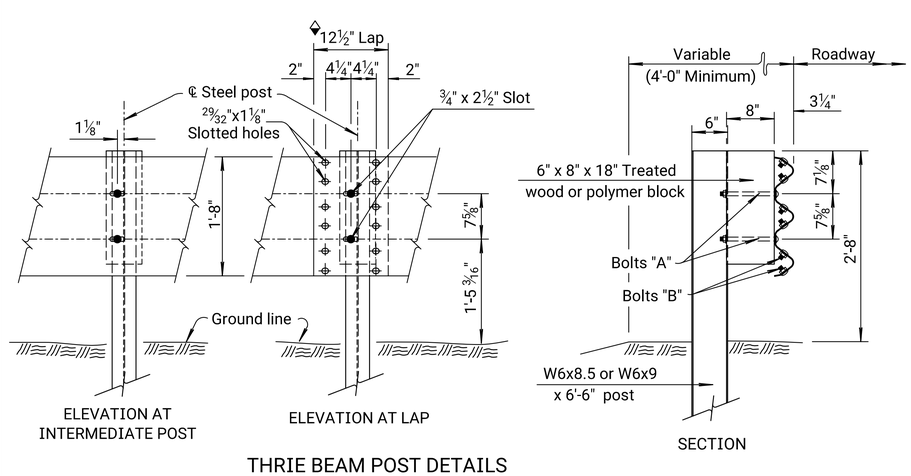

THRIE BEAM POST DETAILS

◆ Lap guardrail splices, including terminal connector, in the direction of traffic. Where traffic is temporarily carried in the opposite direction of final configuration, lap rail splices in the direction of permanent traffic.

W-BEAM POST DETAILS

STEEL POSTS

GENERAL NOTES (Steel Posts)

Use grade of steel for steel posts that meets the requirements of the standard specifications. Hot dip galvanize the posts after fabrication, see standard specifications. Use only one post/blockout type within guardrail run, this excludes the guardrail end terminals. For wood/polymer blockout requriements see standard specifications. Approved polymer blockouts may be substituted for wood blockouts. Only one type of blockout is permitted on each guardrail installation. This excludes the guardrail end terminals. Set guardrail posts by digging or by driving. Use post caps to protect the post from crushing during driving operations. Contractor must notify Engineer at the earliest time when a non-removable manmade object (footing, pipe, etc.) is encountered and prevents installation of a full length post. Contractor must obtain Engineer approval prior to cutting post shorter than 6'-6" except as allowed on Standard Drawing RD617. All dimensions are nominal and are subject to manufacturing tolerances. Excavation including rock, shale, and other materials for erection of Guardrail is subsidiary to various bid items for which payment is made. Where guardrail posts are installed in pavement, form openings in the pavement for the guardrail posts.

BOLT SIZE SCHEDULE	
Bolt	L
A	8 ½"
B	1 ¼"
C	18"

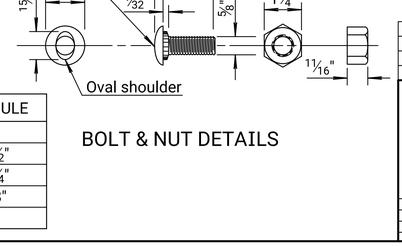

BOLT & NUT DETAILS

Galvanize all bolts, nuts, and washers in accordance with the KDOT's Standard Specifications.

✲ See Standard Drawing RD613 for Thrie-Beam Transition Section Details.

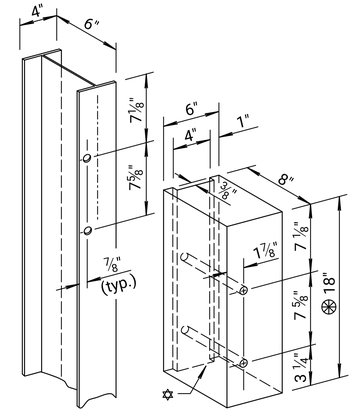

Note: All holes 13/16" dia.

THRIE BEAM
HOLE PUNCHING DETAILS

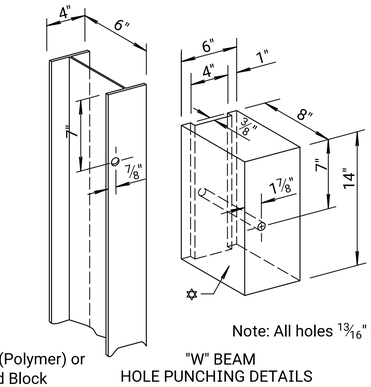

Note: All holes 13/16" dia.

✲ Non-Metallic (Polymer) or Treated Wood Block

"W" BEAM
HOLE PUNCHING DETAILS

NO.	DATE	REVISIONS	BY	APP'D
13	09-05-18	Added Det., Post In Pavement	A.L.R.	T.T.R.
12	12-14-10	Revised notes, 28" w-be	S.W.K.	J.O.B.
11	06-30-04	Remove steel blockout and notes	S.W.K.	J.O.B.

KANSAS DEPARTMENT OF TRANSPORTATION

GUARDRAIL POST DETAILS

RD611

FHWA APPROVAL	09-25-18	APP'D.	Scott. W. King
DESIGNED	DETAILED	QUANTITIES	TRACED
DESIGN CK.	DETAIL CK.	QUAN.CK.	TRACE CK.

STATE	PROJECT NO.	YEAR	SHEET NO.	TOTAL SHEETS
KANSAS	073 C-5357-01	2026	7	36

SUMMARY OF QUANTITIES

Item / Location	Class I Excavation Cu. Yds.	Class II Excavation Cu. Yds.	Concrete (Grade 4.0) (AE) Cu. Yds.	Reinforcing Steel (Grade 60) Lbs.	ø Precast Reinforced Concrete Bridge Slabs Sq. Ft.	✳ Piles (Concrete 10¾" Shell Pile)	Cast Steel Pile Points Each	Contractor Furnished PDA Each	Slope Protection (Riprap Stone) (Cu. Yds.)
Abutment No. 1	20	154	73.7	2,970		344	9	1	30
Abutment No. 2	21	151	73.7	2,970		344	9	1	51
Substr. Total									
Superstr. Total					1,140				
Total	41	305	147.4	5,990	1,140 ø	688 †	18	2	81

ø Precast reinforced concrete bridge slabs quantity calculated based on 28'-6" bridge out-to-out width.

† Summary of Piling
Abutment No. 1 4 @ 39' - 1 @ 49' PDA Pile Abutment, 4 @ 25' Wings
Abutment No. 2 4 @ 39' - 1 @ 49' PDA Pile Abutment, 4 @ 25' Wings

✳ NOTE: Only Piles (Concrete 10¾" Shell Pile) shall be used on this project.

NOTE: Pile lengths and concrete abutment details may need to be adjusted depending on thickness of the precast reinforced concrete bridge slabs. Pile lengths and concrete abutment calculated assuming bridge slab depth of 1'-9".

INDEX TO BRIDGE DRAWINGS

Sheet No.	Drawing
7	General Notes and Quantities
8	Contour Map
9	Construction Layout
10	Geology Sheet
11-13	Bridge Details
Standards	
14	Bridge Excavation
15	Standard Pile Details
16	Support for Spacers and Reinforcing Steel

GENERAL NOTES

CONSTRUCTION SPECIFICATIONS: Kansas Department of Transportation, Standard Specifications for State Road and Bridge Construction, 2015 Version, and Special Provisions.

EMBANKMENT: Complete the embankment at the abutments as shown on the Bridge Excavation sheet prior to driving the abutment piling or commencing with the abutment footing excavation.

BRIDGE EXCAVATION: Elevation 1967.00 shall designate the Excavation Boundary Plane of Class I and Class II Excavation; Class I above the plane, Class II below the plane. See the Bridge Excavation sheet for the limits of pay excavation.

BACKFILL COMPACTION: Compact backfill at the abutments. Backfill compaction shall be subsidiary to other items of the project.

PILING: Driven piles will develop their capacity from skin friction and end bearing in overburden soils. Driving shall stop when in the opinion of the Engineer additional driving may damage the piling. Drive all abutment piling to the Pile Driving Formula Load of:

Abutment No. 1 85 Tons

Abutment No. 2 85 Tons

Wing pile will be driven to the 25' length or a pile load of 85 tons. Whichever occurs first.

As a minimum drive each pile to the load and penetration, but in no case shall the pile be driven to more than 110% of Pile Driving Formula Driving Load.

CONTRACTOR FURNISHED PDA: Use the Pile Driving Analyzer equipment at the locations shown on the Construction Layout. Use Pile Driving Analyzer equipment and methods compliant with KDOT Special Provisions. The piling shall remain in place as permanent piling. Drive the piling to the resistance value of 142 Tons at the abutments (Strength I divided by Phi). At any location where problems are experienced, pile damage suspected, or the Pile Driving Formula Load occurs significantly above the design tip elevation, the Engineer may request that the Pile Driving Analyzer (PDA) equipment be used.

PILING SPLICE LOCATION: Integral pile splice locations and weld testing criteria for Abutments 1 & 2 will follow the "Standard Pile Details" Sheet (BR110).

REINFORCING STEEL: All reinforcing steel dimensions are to the centerline of bars unless otherwise noted. All reinforcing steel, except the spiral bars, shall conform to the requirements of ASTM A615, Grade 60. Spiral bars may meet the requirements of either ASTM A615 (Gr. 40 or 60) or A82, and are included in the bid item "Reinforcing Steel (Gr. 60)".

CONCRETE: Substructure concrete is bid as Concrete (Grade 4.0)(AE). Bevel all exposed edges of all concrete with a ¾ inch triangular molding, except where noted on the plans. Construction joints are optional, but if used, place only at locations shown, or at locations approved by the Engineer.

REMOVAL OF EXISTING STRUCTURE: The Contractor shall remove the existing 12'-12' Timber Beam Bridge (TBMS). 24' Roadway. Bridge #000730633505440. The timber stringers and guardrail shall be salvaged in an acceptable condition for the county and stockpiled on county R/W.All other items of the existing structure shall become property of the Contractor and be removed from the site.

DEMOLITION PLANS: This is a Category A Demolition. Submit Detailed Demolition Plans to the Owner's designated Engineer for review and distribution per KDOT Specifications. No Demolition work will begin without approved Demolition Plans. A Licensed Professional Engineer is not required.

ERECTION PLANS: This is a Category A Structure. Submit detailed Erection Plans to the Field Engineer per KDOT Specifications. A Licensed Professional Engineer is not required.

DIMENSIONS: All dimensions shown on the design plans are horizontal dimensions unless otherwise noted. Make necessary allowances for roadway grade and cross slope.

TEMPERATURE: The design temperature for all dimensions is 60° F.

QUANTITIES: Items not listed separately in the Summary of Quantities are subsidiary to other items in the proposal.

CONTRACTOR CONSTRUCTION STAKING: Contractor Construction Staking for clear span bridges requires two independent surveys. See KDOT Specifications.

SLOPE PROTECTION (Riprap Stone): Place Slope Protection (Riprap Stone) to the limits and thicknesses shown on the plans or as directed by the Engineer. Use Light 200 Lb. as described in Division 1100 placed to the limits shown on the plans.

PRECAST REINFORCED CONCRETE BRIDGE SLABS: The Contractor shall provide shop drawings stamped by a Registered Professional Engineer licensed in the State of Kansas for the precast reinforced concrete bridge slabs and bridge slab installation details for approval by the Engineer. The bridge slabs shall be anchored to the abutment pile caps. The Contractor shall provide shop drawings detailing the connection of the bridge slabs to the pile cap for approval by the Engineer. The bridge slabs shall be connected to transfer loads between adjacent bridge slabs such that the individual slabs act as one unit. The Contractor shall provide shop drawings detailing the connection between bridge slabs. The bridge slabs shall be designed for LRFD HL-93 loading with a 25 psf allowance for a future wearing surface and a load rating summary sheet stamped by a Registered Professional Engineer licensed in the State of Kansas shall be provided. The LRFR inventory rating factor for HL-93 loading shall be a minimum of 1.0 and the rating factor for T3, T3S2, T3-3, SU4, SU5, SU6, SU7, NRL, EV2, and EV3 shall be a minimum of 1.0. All exposed edges of the bridge slabs shall have a minimum ¾" chamfer. The top surface of the bridge slabs shall be broom finished transverse to the bridge slab centerline. All labor, concrete, reinforcing steel, elastomeric bearing pads, joint sealant, backer rods and incidentals necessary to fabricate and install the precast reinforced concrete bridge slabs shall be subsidiary to the bid item "Precast Reinforced Concrete Bridge Slabs".

GUARDRAIL, STEEL PLATE: The Contractor shall provide shop drawings to install W-beam guardrail on the outside bridge slabs. Guardrail posts shall be steel and shall be bolted to the outside bridge slabs. Blocks will not be required between the steel posts and the W-beam guardrail across the bridge. All labor, materials, and incidentals necessary to install the guardrail shall be subsidiary to the bid item "Guardrail, Steel Plate".

DESIGN DATA

DESIGN SPECIFICATIONS:
AASHTO Specifications, 2017 Edition and latest Interim Specifications. Load and Resistance Factor Design.

DESIGN LOADING:
HL-93

Design Dead Load includes an allowance of 25 psf for a future wearing surface.

UNIT STRESSES:

Concrete (Grade 4.0)	f'c =	4 ksi min.
Concrete (Grade 4.0)(AE)	f'c =	4 ksi min.
Reinforcing Steel (Grade 60)	fy =	60 ksi
Steel Piles	fy =	50 ksi
Structural Steel (A709)	fy =	50 ksi
Steel Sheet Piling (A328)	fy =	36 ksi

LRFD DESIGN PILE LOAD:

Design Loading (Tons/Pile)	Strength 1	Service 1	Phi
Abutments	85	65	0.6

LFD & LRFR RATING FACTORS		
Truck / Rating Level	Inventory	Operating
HS-20 (36T)		
Type HET (110T)	X	
2002 LFD Rating. 17th Edition AASHTO		
HL-93 Loading		
2008 Manual for Bridge Evaluation		

Rating factors to be provided by the pre-cast concrete beam fabricator. The LRFR inventory rating factor for HL-93 loading shall be a minimum of 1.0 and the rating factor for T3, T3S2, T3-3, SU4, SU5, SU6, SU7, NRL, EV2, and EV3 shall be a minimum of 1.0.

NO.	DATE	REVISIONS	BY	APP'D
6	10/19/15	Added Asbestos NOT8221 Option	JPJ	CER
5	2/4/15	Modfifed Per 2015 Specification	JPJ	CER
4	4/7/14	Current Release	JPJ	CER
3	2/12/14	Added Benchmark	JPJ	CER
2	08/2/12	ADDED NOT3135 & NOT3145	JPJ	TLF
1	04/29/10	ADDED RATING TABLES	JPJ	KFH

KANSAS DEPARTMENT OF TRANSPORTATION
Br. No. 000730633605440 (OS 88) Sta. 49+75.00

GENERAL NOTES AND QUANTITIES

Proj. 073 C-5357-01 Pawnee Co.

SHEET NO. OF	SCALE	APP'D	
DESIGNED	DETAILED	QUANTITIES	CADD
DESIGN CK.	DETAIL CK.	QUAN. CK.	CADD CK.

Std. Base File:
Plotted By: jdlabal Plot Location:
File: br200.dgn
Plot Date: 9-APR-2026 15:20

UTILITIES			
Fiber Optic	Golden Belt Telephone	Chris Grandy	785-259-3429
Power	Midwest Energy	Eathan Alan	620-402-4622
Phone	AT&T	Mitch Brenner	620-338-6267

P.O.T. Sta. 43+00.00
N = 539,895.276' E = 15,542,715.404'
1. Not Set

C.P. #1
26.41' Lt. Sta. 44+59.48
N 539,922.046' E 15,542,874.821'
1. Set 5/8" Rebar at TOB
2. App. ℄ of Road 29.3 'S
3. Crop line S. of Road R. 57.0' S
4. Crop line 0.5' N

P.I. Sta. 47+00.00
N = 539,896.176' E = 15,543,115.403'
1. Not Set

C.P. #2
38.21' Rt. Sta. 50+90.08
N 539,859.325' E 15,543,505.617'
1. Set 5/8" Rebar and Cap at surface
2. Top of steel Cor. fence post 13.0' NE
3. E face of PP 18.5' NW
4. App. ℄ of Road R. 37.2' N

P.O.T. Sta. 55+00.00
N = 539,898.957' E = 15,543,915.398'
1. Not Set

C.P. #3
35.74' Lt. Sta. 59+06.22
N 539,936.112' E 15,544,321.492'
1. Set 5/8" Rebar and Cap at surface
2. App. ℄ of Road R. 38.8' S
3. Fenceline running E - W 66.6' S
4. Set spike/washer on top of CO. Post 33.4' E

STATE	PROJECT N0.	YEAR	SHEET NO.	TOTAL SHEETS
KANSAS	073 C-5357-01	2026	8	36

The Contractor shall remove the existing 12'-12' Timber Beam Bridge (TBMS) (24'-0" Roadway).
Br. No. 000730633505440 (old OS 88).
The timber stringers and guardrail shall be salvaged in an acceptable condition for the county and stockpiled on county R/W. All other items of the existing structure shall become property of the Contractor and shall be removed from the site.

The Contractor shall excavate the channel at the bridge site to the limits shown prior to construction of the bridge.

The Contractor shall complete the Embankment as shown on the bridge excavation sheet prior to the driving of the abutment piling.

All trees, hedge rows, shelterbelts, and woody shrubs not shown to be removed and located between the construction limits and the right-of-way line or easment line shall be spared unless directed by the Engineer to be removed.

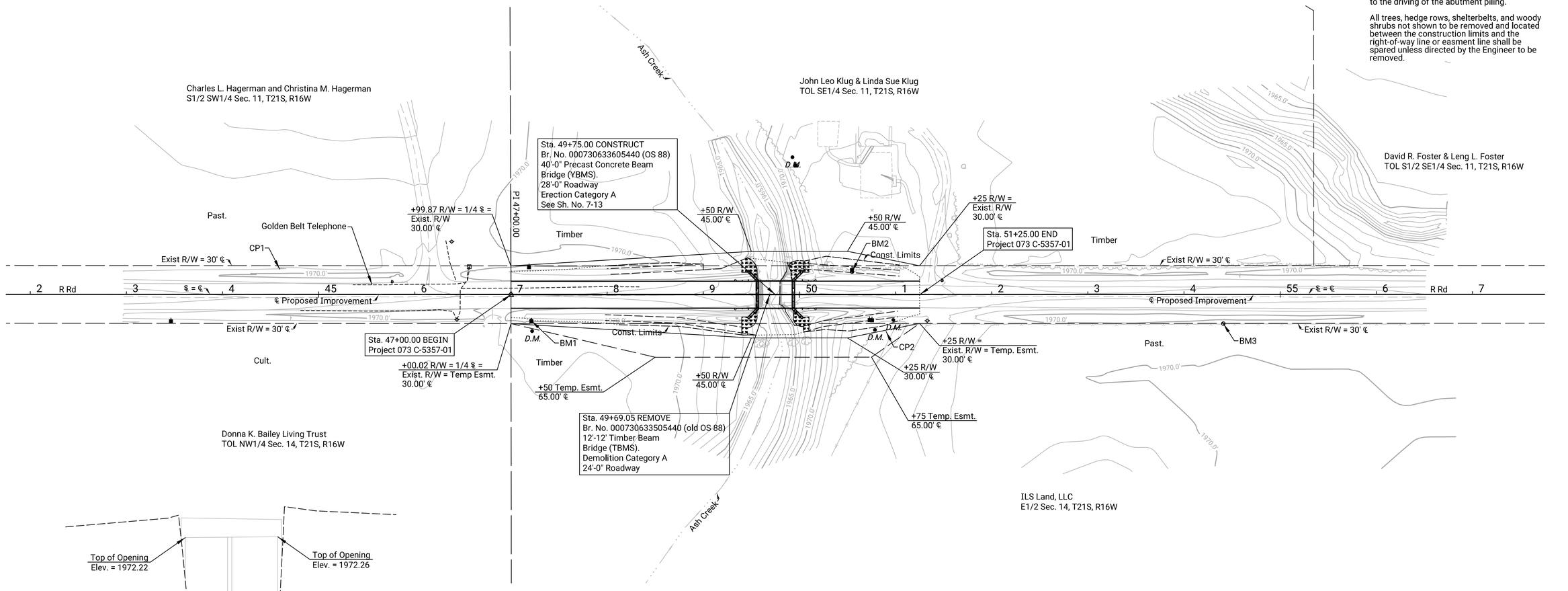

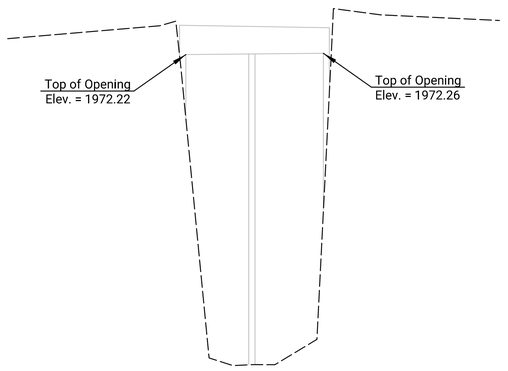

EXISTING WATERWAY OPENING SKETCH
Upstream Waterway Opening = 177 Sq. Ft.

BM#1: Set "T" Post 1' N of PP
Sta. 47+21.10 26.91 Rt. Elev = 1969.87

BM#2: Set "T" Post 1' S of PP
Sta. 50+54.78 23.89 Lt. Elev = 1973.64

BM#3: Set "T" Post 1' N of Fc. Line
Sta. 54+40.91 30.27 Rt.Elev = 1970.685

SCALE
PLAN: Lat. & Long. 50' 0 50' 100'

KANSAS DEPARTMENT OF TRANSPORTATION
Br. No. 000730633605440 (OS 88) Sta. 49+75.00
CONTOUR MAP
Proj. 073 C-5357-01 Pawnee Co.

DATE	BY	REFERENCES NOTED	REFERENCES CHECKED
	T. Lesage		
	J. Dlabal		

Plotted by : jdlabal 8-APR-2026 08:40
File : 2410800_Contour Map.dgn

STATE	PROJECT N0.	YEAR	SHEET NO.	TOTAL SHEETS
KANSAS	073 C-5357-01	2026	9	36

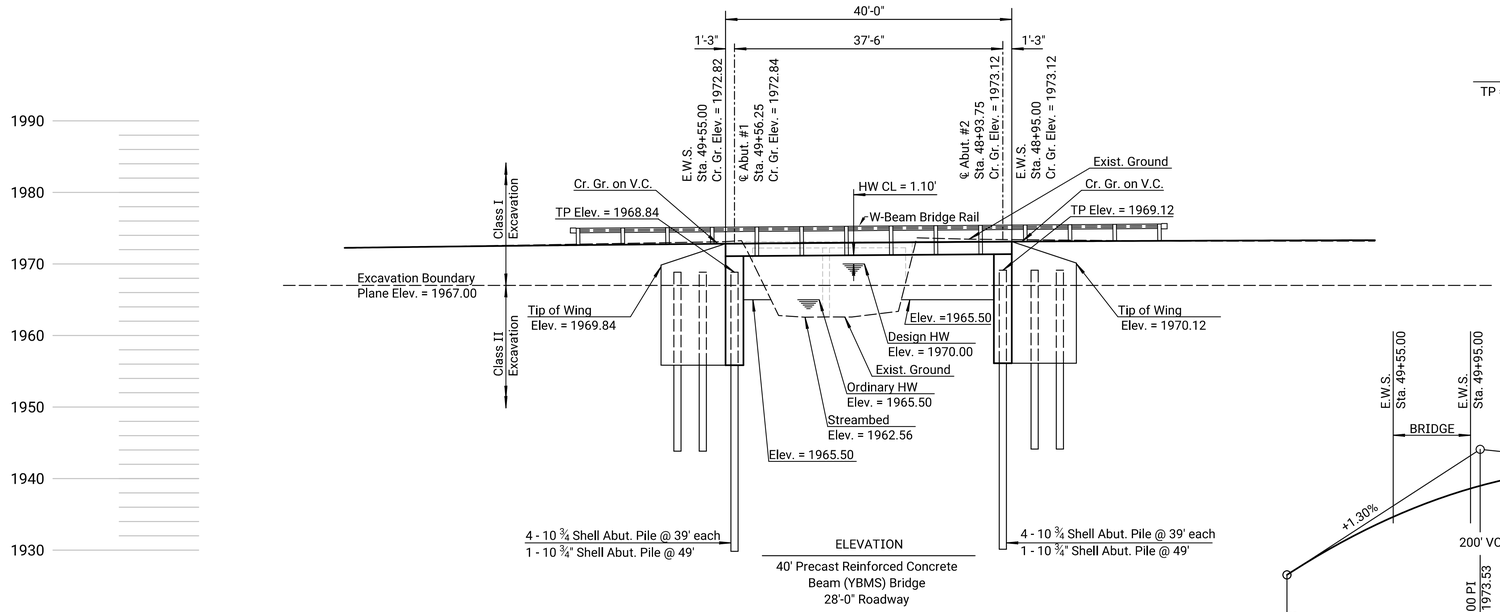

ELEVATION

40' Precast Reinforced Concrete Beam (YBMS) Bridge
28'-0" Roadway

LEGEND

TP = Top of Pile

Drainage Data

Drainage Area	92.5	sq. mi.
Design Frequency	10	yrs
Design Discharge (Q10)	1,250	cfs
Design High Water Elevation (Q10)	1,970.0	ft.
Change in Design Backwater	-0.5	ft.
Overtopping Elevation (Sta. 46+70)	1,970.8	ft.
Overtopping Discharge	1,720	cfs
Overtopping Frequency	18	yr
Ordinary High Water Elevation	1,965.5	ft.
Total Waterway Provided	252	sq. ft.
Design Waterway Provided	209	sq. ft.
Estimated Ordinary High Water Discharge	85	cfs
Historic High Water Elevation	1,973.3	ft.

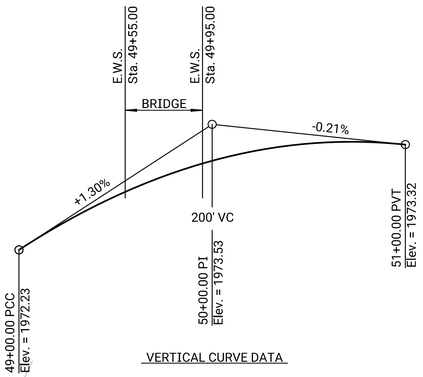

VERTICAL CURVE DATA

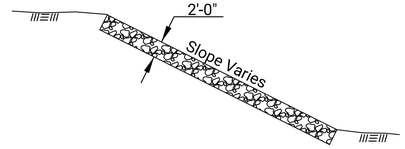

TYPICAL SLOPE PROTECTION

SLOPE PROTECTION (Riprap Stone): Place Slope Protection (Riprap Stone) to the limits and thicknesses shown on the plans or as directed by the Engineer. Use Light 200 Lb. as described in Division 1100.

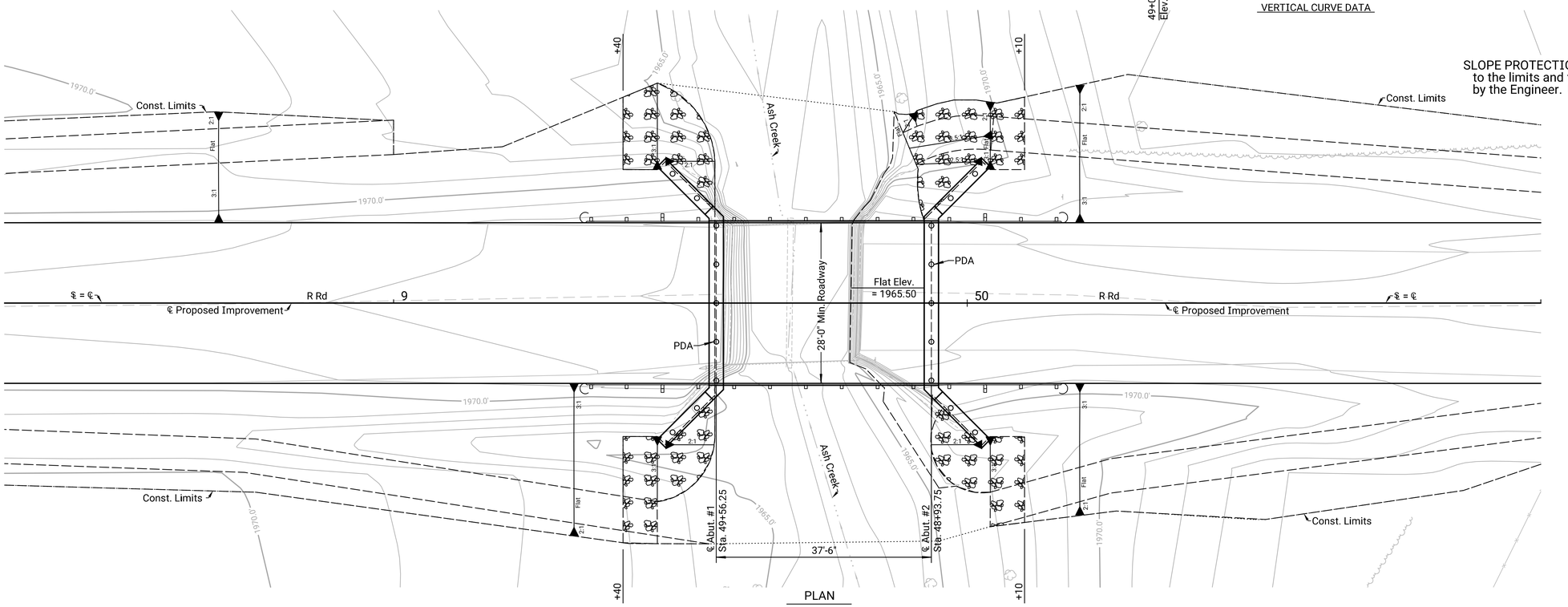

PLAN

SCALE : 1" = 10'-0"

10' 0 10' 20'

Contour Interval = 2'

BM#1: Set "T" Post 1' N of PP
Sta. 47+21.10 26.91 Rt. Elev = 1969.87

BM#2: Set "T" Post 1' S of PP
Sta. 50+54.78 23.89 Lt. Elev = 1973.64

BM#3: Set "T" Post 1' N of Fc. Line
Sta. 54+40.91 30.27 Rt.Elev = 1970.685

KANSAS DEPARTMENT OF TRANSPORTATION
Br. No. 000730633605440 (OS 88) Sta. 49+75.00

CONSTRUCTION LAYOUT

Proj. 073 C-5357-01 Pawnee Co.

Plotted by : jdlabal 8-APR-2026 08:40
File : 2410800_Construction Layout.dgn

STATE	PROJECT NO.	YEAR	SHEET NO.	TOTAL SHEETS
KANSAS	073 C-5357-01	2026	10	36

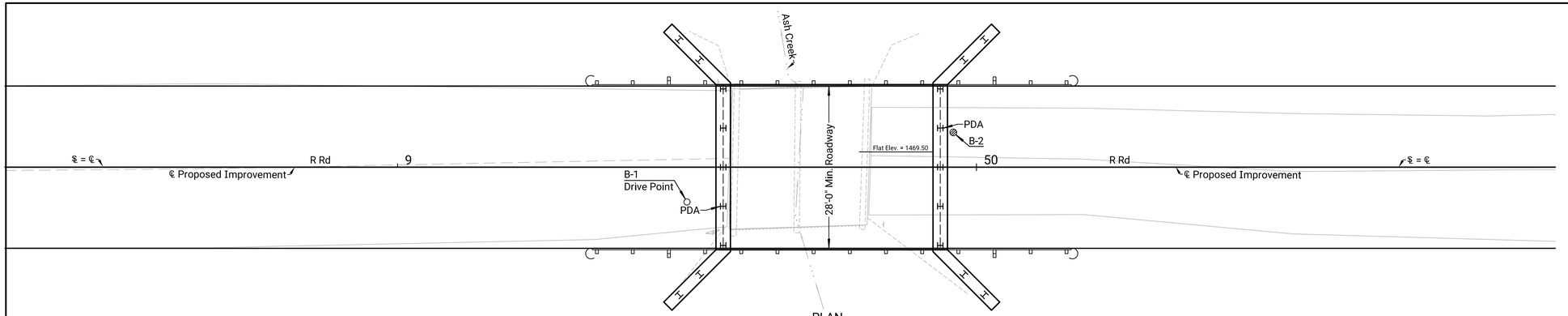

PLAN

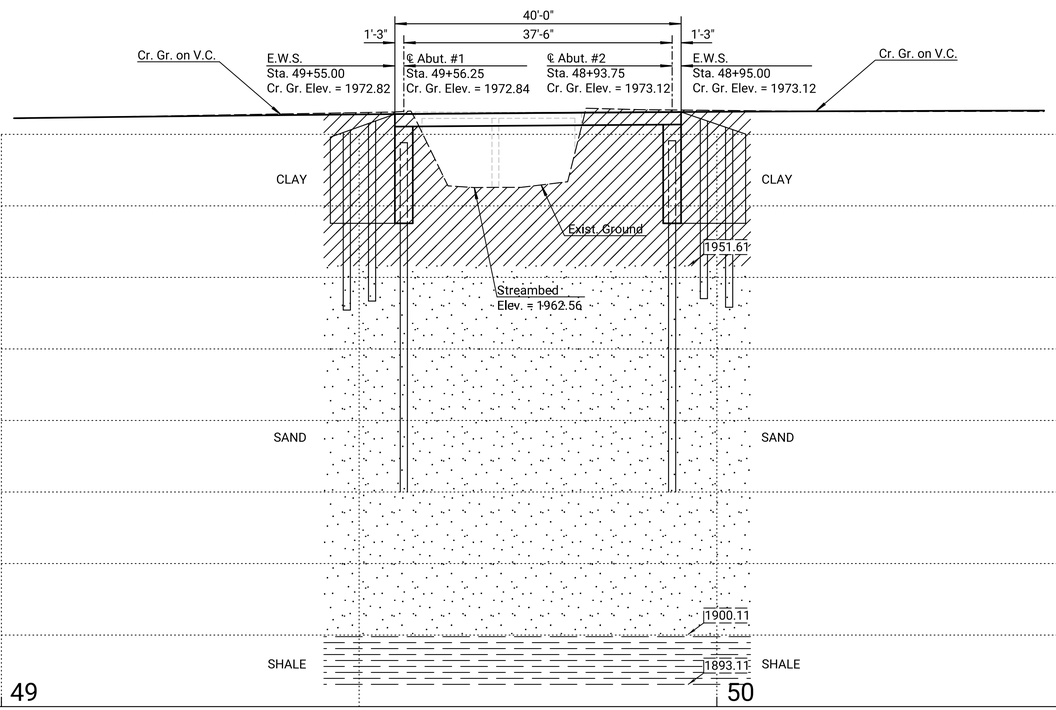

STANDARD GEOLOGIC SYMBOLS

- Clay or Underclay
- Silty Clay
- Silt
- Sand
- Gravel
- Boulders
- Caliche
- Silty Clayey Shale
- Limy Shale
- Black or Fissile Shale
- Sandy Shale
- Gypsiferous Shale
- Weathered Shale
- Sandstone
- Shaly Sandstone
- Gypsum bed
- Dolomite
- Cross-bedded Sandstone
- Limestone
- Cherty Limestone
- Shaly Limestone
- Sandy Limestone
- Weathered or Broken Limestone
- Loess
- Mortar bed
- Coal
- Siltstone
- Chalk
- Wavy limestone
- Chalky limestone

SOUNDINGS

- Core drill
- Power auger
- Hand tools
- Air hammer
- Cone (CPT) penetrometer
- Shelby tube
- Water level

GEOLOGIC PROFILE

- 000.0 — Elevation interpolated or from adjacent soundings
- 000.0 — Actual sounding elevation

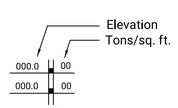

UNCONFINED COMPRESSION TEST

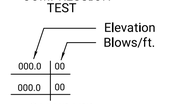

STANDARD PENETRATION TEST

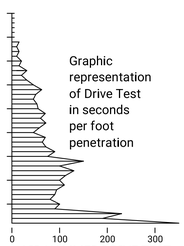

Graphic representation of Drive Test in seconds per foot penetration

AIR HAMMER DRIVE TEST
Scale: 1"= 100 Seconds Horiz.
1"= 10' Vert.

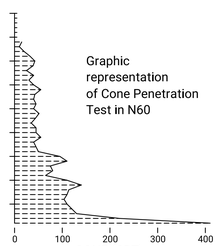

Graphic representation of Cone Penetration Test in N60

CONE (CPT) PENETROMETER TEST
Scale: N60.

NOTE: Soundings shown on these plans are taken from notes obtained in the field and represent the best information available. Logs of these soundings are provided with the bid documents, or are available from the Kansas Department of Transportation in Topeka for inspection by interested and qualified bidders.

SCALE: 1"= 10' Horiz. 1"= 10' Vert.

NO.	DATE	REVISIONS	BY	APP'D
3				
2				
1				

KANSAS DEPARTMENT OF TRANSPORTATION

Br. No. 000730633605440 (OS 88) Sta. 49+75.00

GEOLOGY SHEET

Proj. 073 C-5357-01 Pawnee Co.

SHEET NO.	OF	SCALE	APP'D
DESIGNED		DETAILED	GEOLOGY DRAWN BY:
DESIGN CK.		DETAIL CK.	GEOLOGY LOCATION:

ROBERT W. HENTHORNE LICENSED 099 07/14/2025 KANSAS GEOLOGIST

Plotted By: mike.thompson
File: Pawnee Co Geology.dgn
Plot Date: 14-JUL-2025 08:49
Plot Location:

STATE	PROJECT NO.	YEAR	SHEET NO.	TOTAL SHEETS
KANSAS	073 C-5357-01	2026	11	36

Note: Bridge slabs are assumed to be 1'-9" thick.
The Contractor shall adjust the elevations and dimensions of concrete abutment for the final design bridge slab thickness.

Note: Adjust Stirrups to avoid anchor bolt holes.

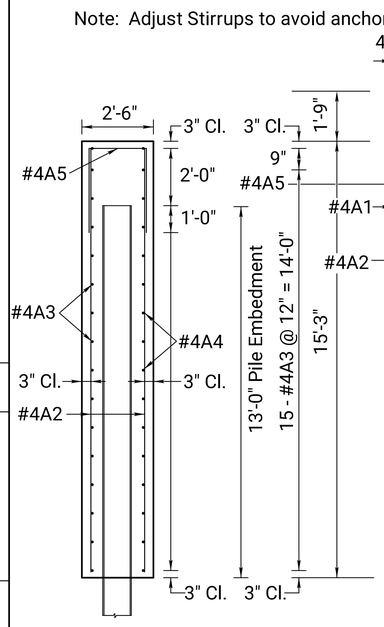

SECTION A-A

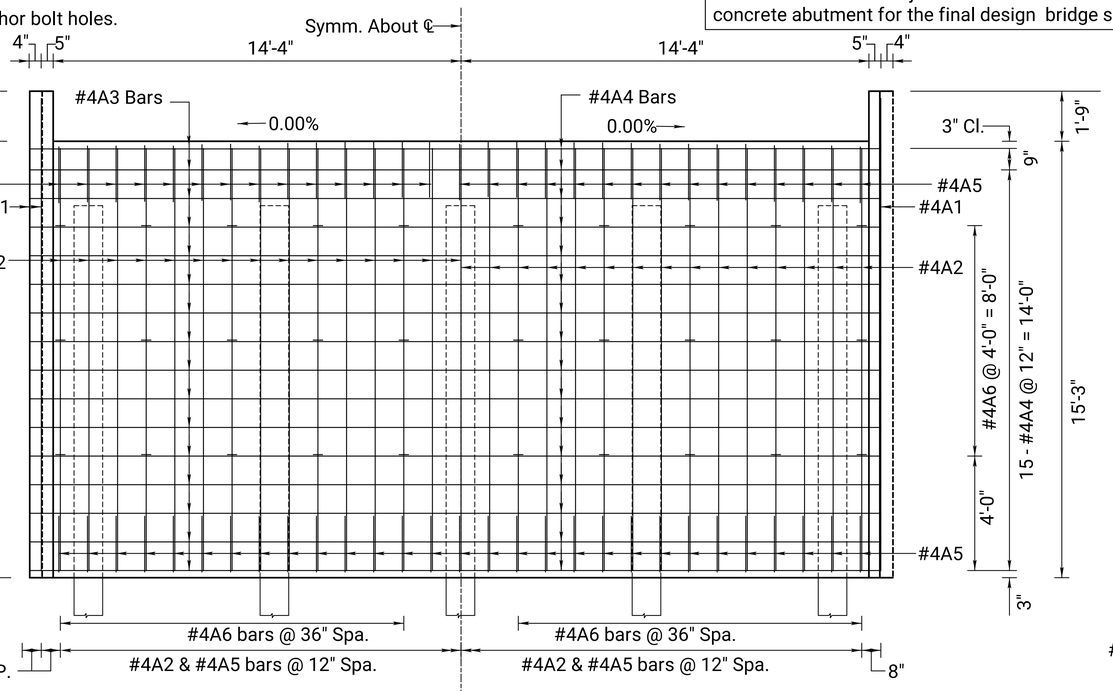

ABUTMENT STREAM FACE ELEVATION

ABUTMENT FILL FACE ELEVATION

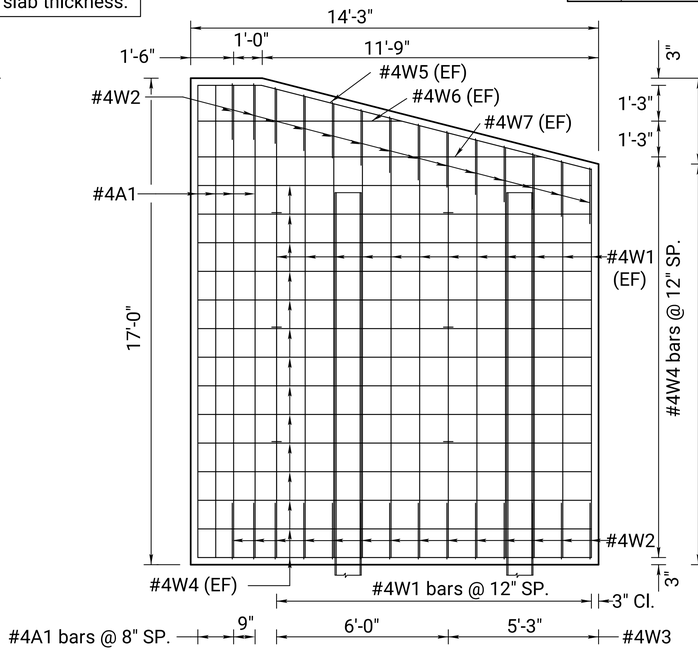

TYPICAL WINGWALL STREAM FACE ELEVATION

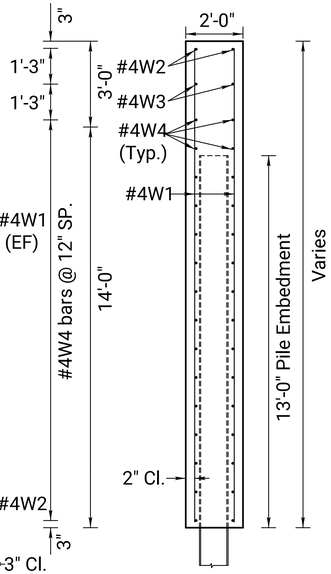

SECTION B-B

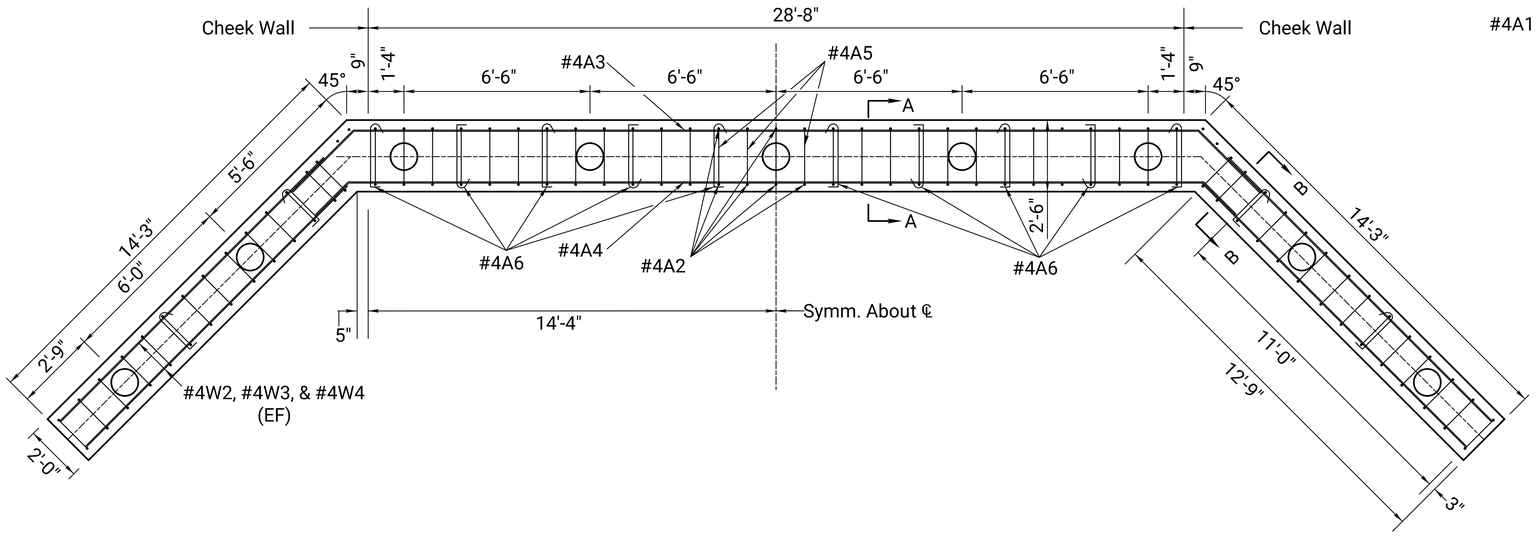

ABUTMENT PLAN

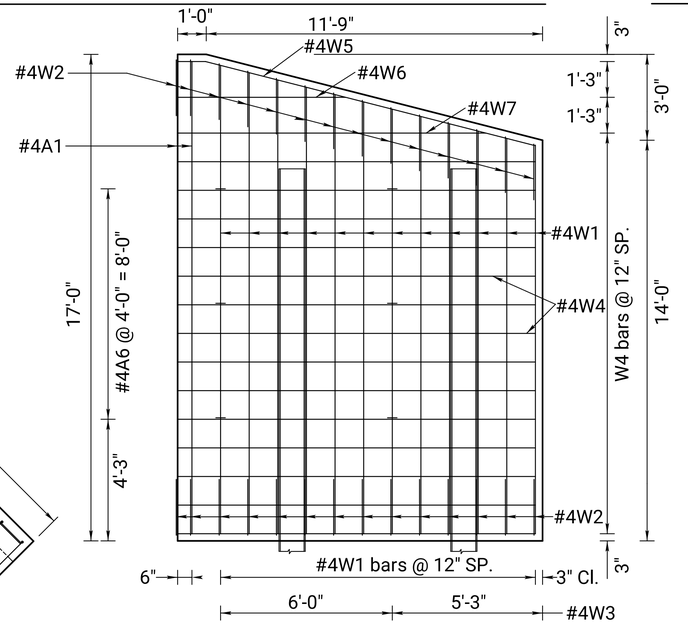

TYPICAL WINGWALL FILL FACE ELEVATION

KANSAS DEPARTMENT OF TRANSPORTATION
Br. No. 000730633605440 (OS 88) Sta. 49+75.00

ABUTMENT DETAILS

Proj. 073 C-5357-01 Pawnee Co.

DATE
BY
REFERENCES NOTED
REFERENCES CHECKED

Plotted by : jdlabal 9-APR-2026 15:20
File : 2410800 Abut Details.dgn

STATE	PROJECT N0.	YEAR	SHEET NO.	TOTAL SHEETS
KANSAS	073 C-5357-01	2026	12	36

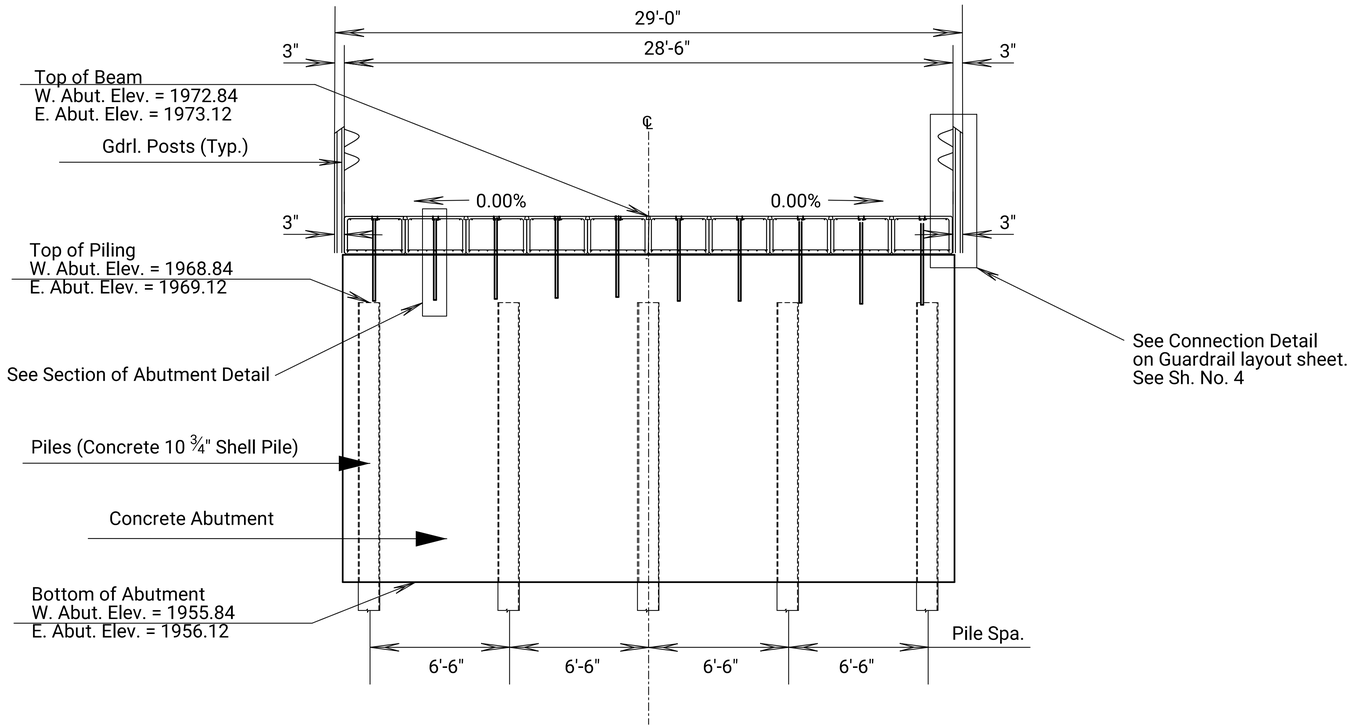

BRIDGE SECTION

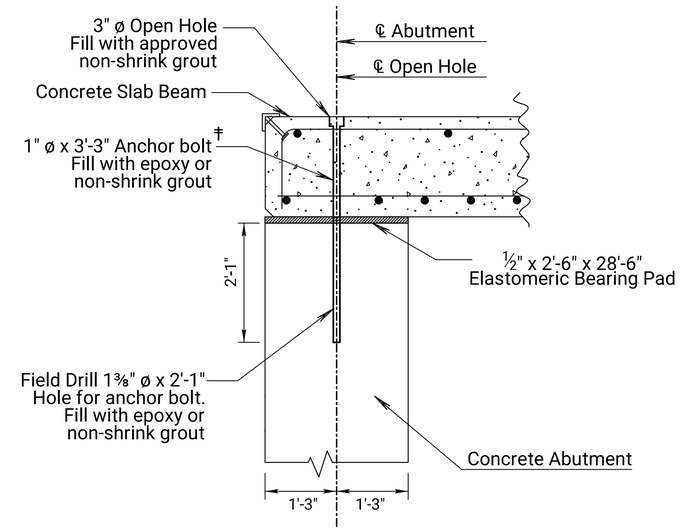

‡ - Anchor bolts to include
Washer & Hex Nut. (All Galvanized)

SECTION OF ABUTMENT

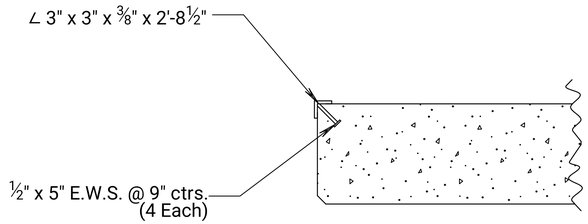

END OF CONCRETE SLAB BEAM

NOTES:

Bridge slabs shall be anchored to the abutments. The Contractor shall provide shop drawings detailing the connection of the bridge slabs.

BEARINGS (ELASTOMERIC) (METHOD A): Bearing devices at Abutments 1 & 2 with an elastomer satisfying:

1. Shore A Drometer Hardness 60
2. Low Temperature Grade 3 Requirements.
3. Type A certification for elastomeric bearing

device acceptance is required.

The Contractor shall provide shop drawings to install W-beam guardrail on the outside bridge slabs. Guardrail posts shall be steel and shall be bolted to the outside bridge slabs. Blocks will not be required between the steel posts and the W-beam guardrail across the bridge. All labor, materials, and incidentals necessary to install theguardrail shall be subsidiary to the bid item "Guardrail, Steel Plate". See Sheet No. 4 for connection details.

KANSAS DEPARTMENT OF TRANSPORTATION
Br. No. 000730633605440 (OS 88) Sta. 49+75.00

BRIDGE DETAILS

Proj. 073 C-5357-01 Pawnee Co.

Plotted by : jdlabal 9-APR-2026 15:20
File : 2410800 Bridge Details.dgn

STATE	PROJECT NO.	YEAR	SHEET NO.	TOTAL SHEETS
KANSAS	073 C-5357-01	2026	13	36

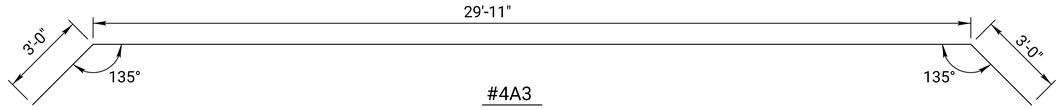

#4A3

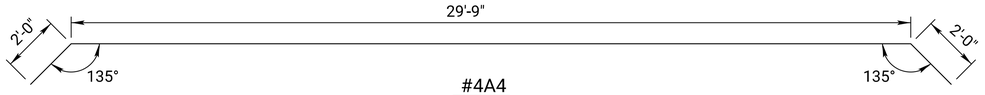

#4A4

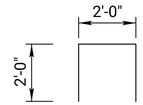

#4A5

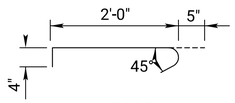

#4A6

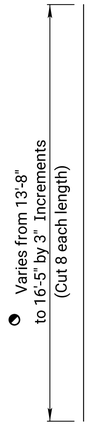

W1

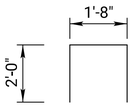

#4W2

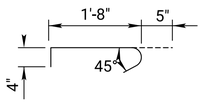

#4W3

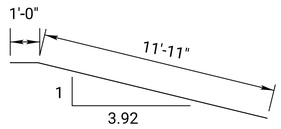

#4W5

BILL OF REINFORCING STEEL
Grade 60

	Straight Bars				Bent Bars			
	Mark	Size	Number	Length	Mark	Size	Number	Length
WING WALL	W1	#4	96	Var. ◔	W2	#4	112	5'-8"
	W4	#4	112	12'-6"	W3	#4	24	2'-5"
	W6	#4	8	5'-11"	W5	#4	8	12'-11"
	W7	#4	8	10'-9"				
ABUTMENT	A1	#4	24	16'-6"	A3	#4	32	35'-11"
	A2	#4	116	14'-9"	A4	#4	32	33'-9"
					A5	#4	116	6'-0"
					A6	#4	60	2'-9"

◔ Varies from 13'-8" to 16'-5" by 3" Increments (Cut 8 each length)

KANSAS DEPARTMENT OF TRANSPORTATION
Br. No. 000730633605440 (OS 88) Sta. 49+75.00
BILL OF REINFORCING STEEL
BENDING DIAGRAMS
Proj. 073 C-5357-01 Pawnee Co.

Plotted by : jdlabal 9-APR-2026 15:20
File : 2410800 Bill of Reinforcing.dgn

STATE	PROJECT NO.	YEAR	SHEET NO.	TOTAL SHEETS
KANSAS	073 C-5357-01	2026	14	36

✳Note: The Grading Contractor shall excavate the channel to the limits shown prior to the construction of the box bridge, unless otherwise noted in the plans.

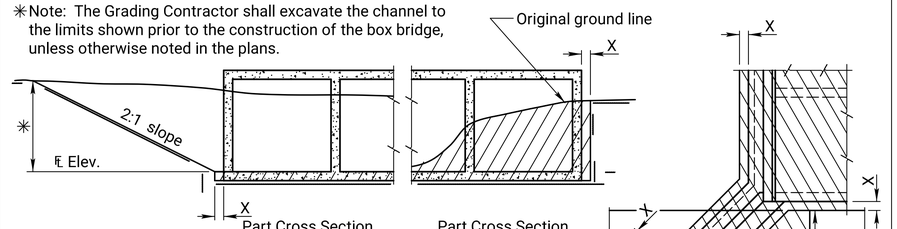

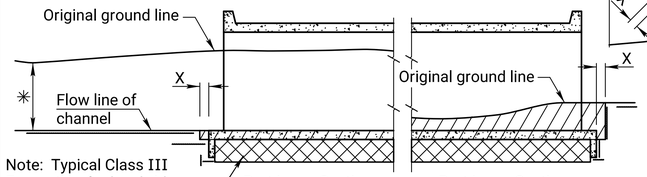

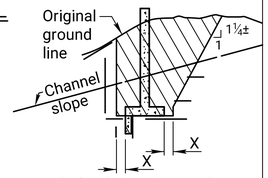

Note: Typical Class III Excavation for box bridges shall be below the "cleared" channel unless otherwise noted on the plans.

Excavation below the elevation of the bottom of the box floor and/or wingwalls is subsidiary to "Foundation Stabilization".

EXCAVATION DETAILS FOR REINFORCED CONCRETE BOX CULVERT

Note: Excavation for culverts less than bridge length and the additional excavation for "Embedded Structures" shall not be paid for as Class III Excavation, but shall be subsidiary to Grade 4.0 Concrete.

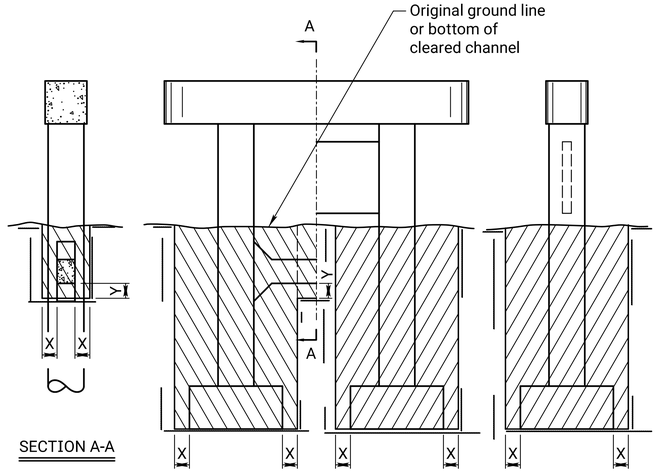

EXCAVATION DETAILS FOR TYPICAL PIERS

See detail when rock or shale (rock) is encountered. ❀

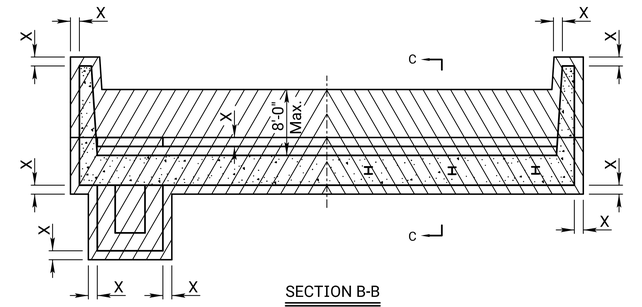

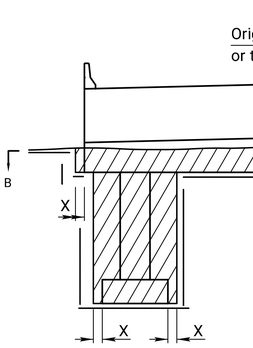

Note: Bridge Contractor shall finish the embankment and berms after the construction of the abutment and dispose of any excess material as approved by the Engineer.

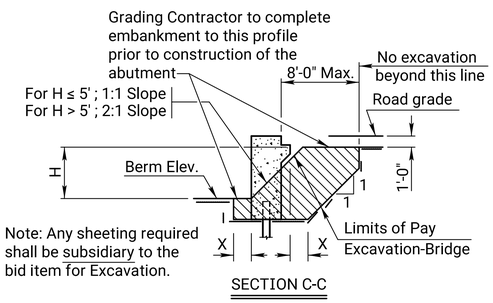

Note: Any sheeting required shall be subsidiary to the bid item for Excavation.

EXCAVATION DETAILS FOR TYPICAL ABUTMENTS

See detail when rock or shale (rock) is encountered. ❀

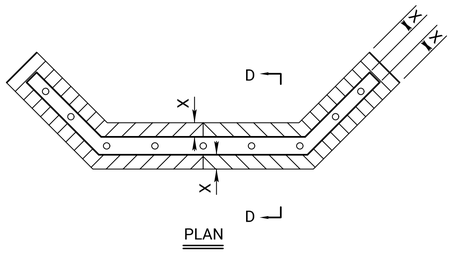

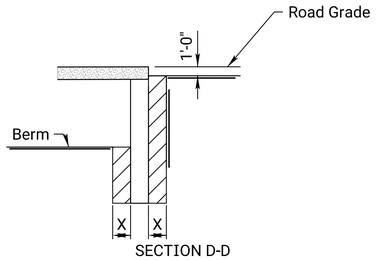

EXCAVATION DETAILS FOR ABUTMENTS WITH FLARED WINGWALLS

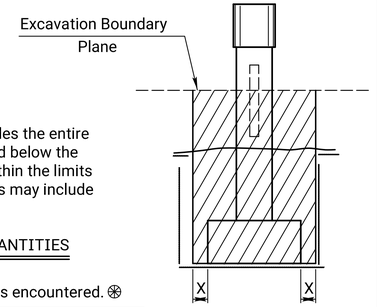

Note: Class II Excavation includes the entire volume of whatever nature found below the "Excavation Boundary Plane", within the limits specified for measurement. This may include water or air.

CLASS II EXCAVATION QUANTITIES

See detail when rock or shale (rock) is encountered. ❀

Note: All bridge excavation shall be computed on the basis of the cross-hatch areas and boundary lines indicated on this sheet and the Excavation Boundary Plane on the Construction Layout.

Sides of trenches in hard or compacted soil including embankments shall be shored, sheeted, braced or otherwise supported when the trench is more than 5 feet in depth and 8 feet or more in length. In lieu of the shoring, the sides of the trench above the 5 foot level may be sloped to preclude collapse. The slope for average soils shall be 1:1. If the angle of repose of the soil is less, flatter slopes shall be required.

Dimension "X" shall be 2'-0" unless indicated otherwise on the general plans.

Dimension "Y" shall be 1'-6" unless indicated otherwise on the general plans.

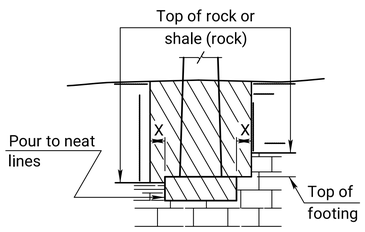

❀ EXCAVATION DETAIL FOR FOOTINGS IN ROCK OR SHALE (ROCK)

(Piers and Abutments)

Note: Excavation below top of rock, hard shale or below top of footing, whichever is lower, shall be to neat lines of the concrete construction.

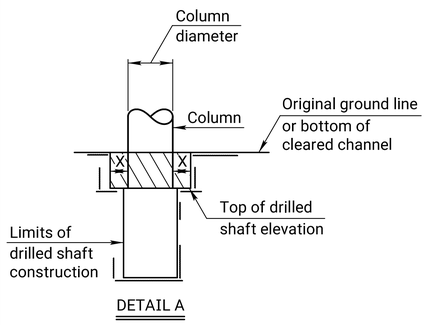

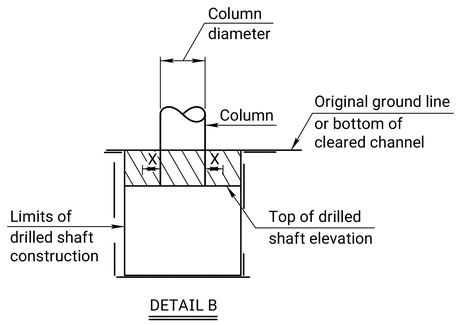

DRILLED SHAFT DETAILS

Note: Whenever the limits of the drilled shaft construction are greater than the Column Diameter + 2X, the limits of Class I, II or III Excavation shall be the limits of the drilled shaft construction. (See Detail B)

NO.	DATE	REVISIONS	BY	APP'D
06	08-15-12	Embedment Excavation Subsidiary	J.P.J.	T.L.F.
05	05-15-12	Revised Wing Excavation	J.P.J.	T.L.F.
04	03-03-10	Revised Wing Excavation	J.P.J.	T.L.F.

KANSAS DEPARTMENT OF TRANSPORTATION

BRIDGE EXCAVATION (LRFD)

~~BR100B~~

FHWA APPROVAL		04-17-10	APP'D.	Terry L. Fleck
DESIGNED	DETAILED	R.D.R.	QUANTITIES	TRACED
DESIGN CK.	DETAIL CK.	L.R.R.	QUAN.CK.	TRACE CK.

Plotted by : jdlabal 8-APR-2026 08:40
File : br100b.dgn

STATE	PROJECT NO.	YEAR	SHEET NO.	TOTAL SHEETS
KANSAS	073 C-5357-01	2026	15	36

O D 10¾" T. = ††
O D 12¾" T. = ††
O D 14" T. = ††

†† See the Geology Report or "Summary of Quanities" for Pipe Pile wall thickness

Note:
Pile shall be driven with a steel head having a projecting ring fitting inside the pipe. Clearance between ring and pipe should be ¼".

Note:
Pile pipe may be spiral welded, longitudinal welded, or seamless steel pipe.

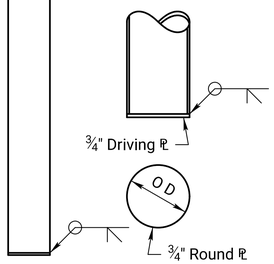

PLAIN ROUND
CAST-IN-PLACE CONCRETE PILES

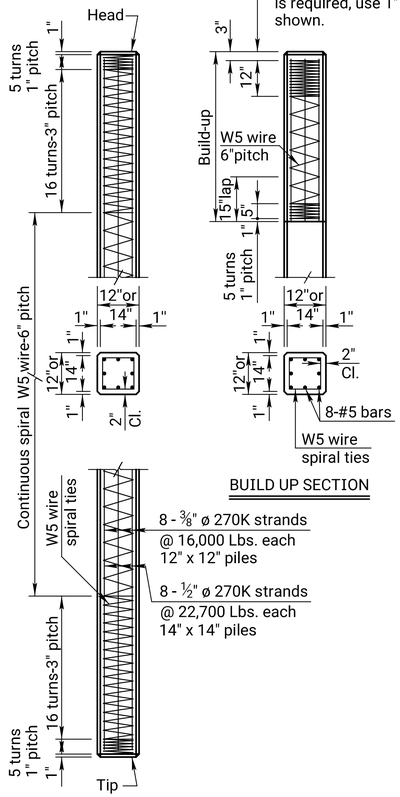

BUILD UP SECTION

12" OR 14"
PRESTRESSED
CONCRETE PILES

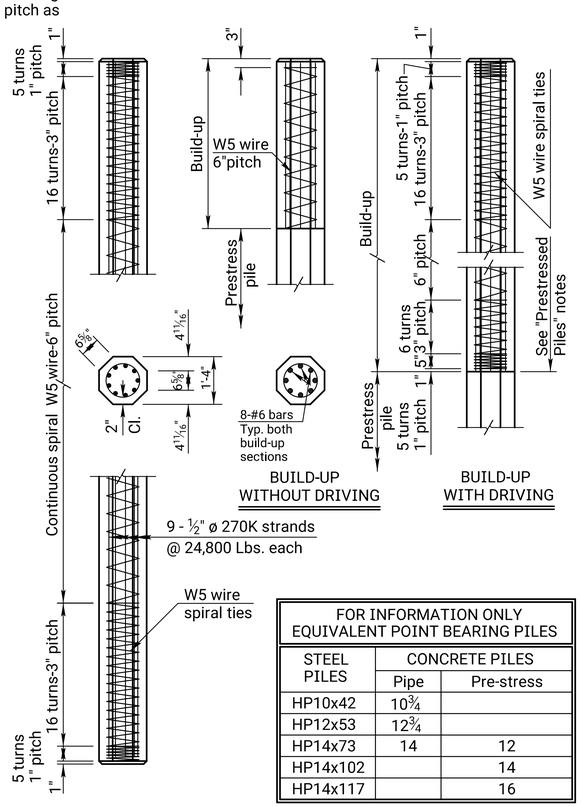

16" PRESTRESSED
CONCRETE PILES

BUILD-UP
WITHOUT DRIVING

BUILD-UP
WITH DRIVING

FOR INFORMATION ONLY EQUIVALENT POINT BEARING PILES		
STEEL PILES	CONCRETE PILES	
	Pipe	Pre-stress
HP10x42	10¾	
HP12x53	12¾	
HP14x73	14	12
HP14x102		14
HP14x117		16

GENERAL NOTES

PRESTRESSED PILES: Fabricate prestressed concrete pile splices in accordance with the Manufacturer's recommendations subject to the approval of the Engineer.

Method of attachment of pile to build-up may be by any of the methods given in the notes on "Alternate Methods." If mild reinforcing steel is used for attachment, the area shall be no less than that used in the build-up.

ALTERNATE METHODS: Method of attachment of a pile to build-up may be by any of the following methods:
1. Cut off at least 2'-0" of pile and expose a minimum of 2'-0" of strands.
2. Cast 8-#6, or 8-#5 bars (equally spaced) into pile head. All bars shall extend into pile head and project from pile head a minimum of 2'-0".
3. Drill 8 holes in pile head (equally spaced) for installation of 8 grouted dowel bars of same size and length as in 2.
4. Provide cored holes for bars as in 3.

No bars or strands are to extend from head of pile or build-up into footing or pile cap unless approved by the Engineer.

TEST PILES: Drive test piles where called for on the bridge plans. The test piles located within the limits of the substructure will become a part of the bridge pile system.

DRIVING FORMULA: Driving formula shall conform to the Standard Specifications.

MEASUREMENT AND PAYMENT: Measurement and payment for all piles shall comply with the Standard Specifications.

REINFORCEMENT: Use reinforcing steel conforming to ASTM A615, Grade 60. Hoops and spirals may be either plain or deformed bars.

PRESTRESSING STEEL: Use uncoated seven-wire low relaxation prestressing strand conforming to ASTM A416, Gr. 270.

STEEL PILE: Steel pile shall conform to the requirements of the Standard Specifications.

PILE POINTS: Pile points shall conform to the dimensions shown and to requirements of the Standard Specifications.

SPECIFICATIONS: Standard Specifications for State Road and Bridge Construction as currently used by the Kansas Department of Transportation.

CONCRETE: Concrete for cast-in-place shall be f'c = 3,500 PSI. Concrete for prestressed shall be f'c = 5,000 PSI.

WELDING: All field welding shall meet the requirements of the Standard Specifications.

Use only Shielded Metal Arch Welding SMAW (stick welding) for pile splices.

Use only low hydrogen E7018, 7016, or 7015 series welding rod (electrode) for all welding applications during pile splicing.

New electrodes are to be purchased for each KDOT project. The electrodes shall arrive on the project in factory hermetically sealed containers, opened and labeled with indelible ink in front of the engineer. The label shall include the current date and the project number. If the container seal is questionable or shows signs of damage the electrode is to be dried in an oven at least one hour at a temperature of 700°F to 800°F.

Upon removal from intact hermetically sealed factory packaging or the drying oven the electrode is to be placed in a storage oven with a minimum temperature of 250°F.

When electrodes are removed from the hermetically sealed container or storage oven and exposed to the atmosphere for less than 4 hours place into the storage oven for at least 4 hours before removing for use.

If electrode is exposed to the atmosphere for 4 hours or more (or 9 hours for moisture resistant electrodes designated with an R in their labeling) then electrode can be dried in a drying oven at a temperature of 450°F to 550°F.

If the electrode is exposed to the atmosphere for 4 hours or more a second time or the rod becomes wet discard rod.

CAST-IN-PLACE SHELLS: Steel shells for cast-in-place concrete piles shall conform to the requirements of the Standard Specifications.

All piles driven without a mandrel shall be of the minimum thicknesses shown. Piles driven with a mandrel shall be of sufficient strength and thickness to withstand driving without injury and to resist harmful distortion and/or buckling due to soil pressure after the mandrel is removed.

Remove, replace or correct to the satisfaction of the Engineer improperly driven, broken or otherwise defective pipe piles. Otherwise drive an additional pile at no extra cost.

The Contractor shall maintain a light suitable for visual inspection of the pile on the job at all times prior to and during the filling of the pipe.

PAINT: All paint shall comply with the Standard Specifications, or as specified on the plans.

MILL TEST REPORTS: Steel piles test reports and steel shell test reports shall comply with the Standard Specifications.

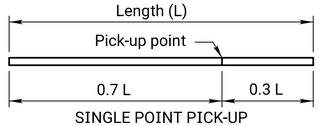

SINGLE POINT PICK-UP

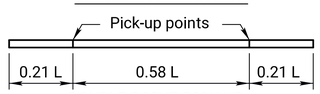

DOUBLE POINT PICK-UP

PICK-UP POINTS FOR PRESTRESSED PILING

Max. length - 55' single point pick-up
Max. length - 80' double point pick-up

Note: Piles shall be marked at Pick-up points to indicate proper points for attaching handling lines.



Outside Flange



Inside Flange

SHELL PILE POINT

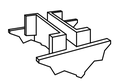

H-Pile Point

CAST STEEL PILE POINT

The pile point shall be a one-piece unit of cast steel. Weld pile points in accordance with manufacturer's recommendations to each steel pile before driving.

Weld Symbology Definition

Use grinder to bevel edges of splice as shown in weld symbology and drawing. In addition to bevels, produce clean, bare, and shiny surfaces at and around the splice welding location.

Lay full penetration root weld from beveled side of splice.

Back gouge root weld from side opposite of root welding application making sure to remove all foreign materials, porous steel, and inclusions from root weld. Finish welding the non beveled side of the splice.

Finish welding beveled side of the splice while removing slag, foreign materials, porous steel, and inclusions in between welding passes, use of a grinder may be needed.

Verify that enough filler metal has been correctly placed in all weld locations to obtain a flush or convex surface with no concavity produced upon completion of the final welds.

SPLICES: Splices for steel piles and shell piling shall be in accordance with details shown on this sheet and the Standard Specifications.

For integral pile bent abutments and piers, if a pile splice is required, do not locate the pile splice within a region extending 2'-0" above and 10'-0" below the bottom of the concrete web wall. For abutments, locate the pile splice at least 10'-0" below top of fill.

With the approval of the Engineer, one splice per bent may be allowed in the region described above without testing. If additional splices are anticipated, based on the geology, the Contractor prior to driving, will locate the splice so that the splice will not fall within the regions described above.

† For integral pile bent abutments and piers, if a splice is located within the regions described above, then the Contractor will test the welds by Radiograph (RT) test methods. Repair and retest any welds not passing the test(s). Each weld tested will have written confirmation of results. Report these results to the Engineer. This work is not paid for directly, but is subsidiary to "Piles".

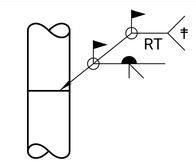

Pipe Section

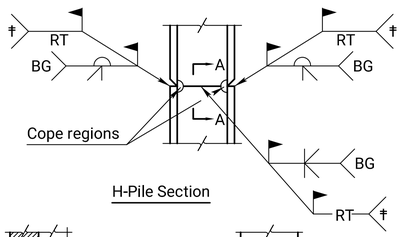

H-Pile Section

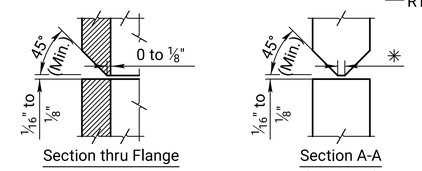

Section thru Flange

Section A-A
(Thru web)

✳ Minimum as required by welding process.

BG = Backgouge

PILE SPLICE DETAILS

NO.	DATE	REVISIONS	BY	APP'D
04	08-16-18	Add splice web section, clarify note	M.L.L.	J.P.J.
03	09-15-15	Clarify Notes	J.P.J.	C.E.R.
02	06-18-12	Clarify f'c, rod type, use and weld	J.P.J.	T.L.F.

KANSAS DEPARTMENT OF TRANSPORTATION

STANDARD PILE DETAILS

BR110

FHWA APPROVAL		10-04-12	APP'D.		Terry L. Fleck
DESIGNED	J.P.J.	DETAILED	QUANTITIES	TRACED	R.A.A.
DESIGN CK.		DETAIL CK.	QUAN.CK.	TRACE CK.	

Plotted by : jdlabal 8-APR-2026 08:40
File : br110.dgn

STATE	PROJECT NO.	YEAR	SHEET NO.	TOTAL SHEETS
KANSAS	073 C-5357-01	2026	16	36

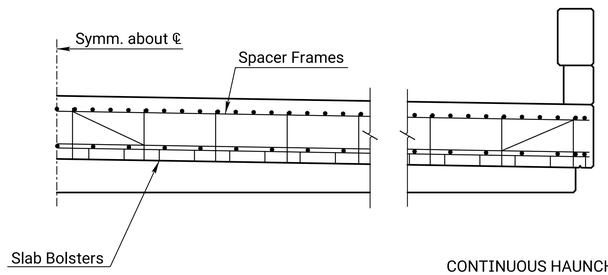

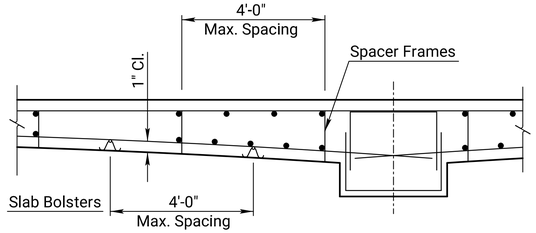

CONTINUOUS HAUNCHED SLAB

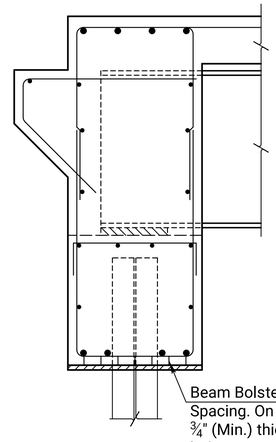

Beam Bolster at 4'-0" Max. Spacing. On soil bearing, place a ¾" (Min.) thick board under bolster.

ABUTMENT

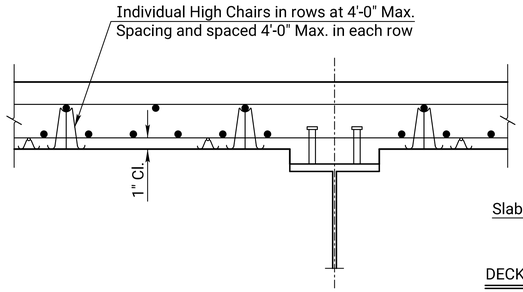

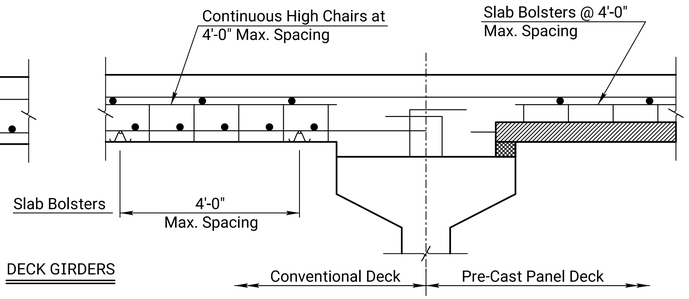

DECK GIRDERS

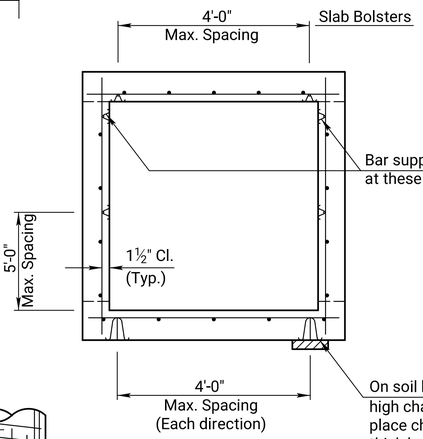

BOX CULVERT

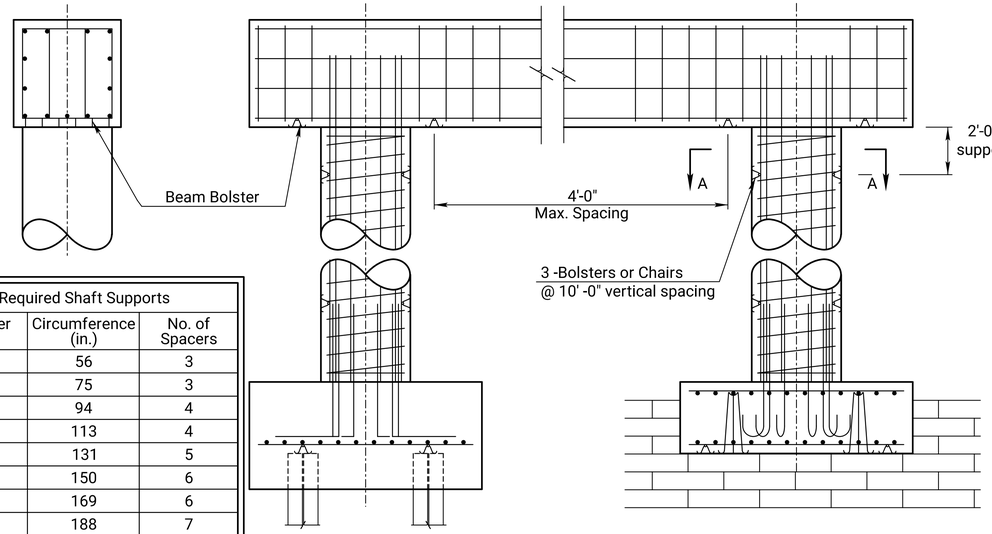

PIER

Required Shaft Supports		
Diameter (in.)	Circumference (in.)	No. of Spacers
18	56	3
24	75	3
30	94	4
36	113	4
42	131	5
48	150	6
54	169	6
60	188	7
66	207	7
72	226	8
78	244	9
84	263	9
90	282	10
96	301	11
102	320	11
108	339	12

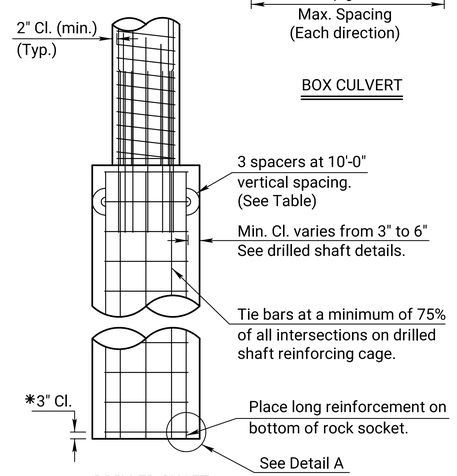

DRILLED SHAFT

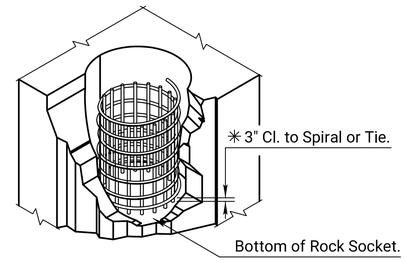

DETAIL A

✳Note: Longitudinal reinforcing steel is placed on the bottom of the rock socket. Maintain 3" clearance from the bottom of rock socket to the first spiral or tie bar.

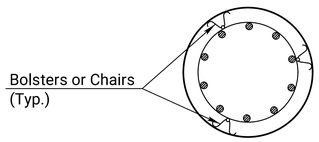

SECTION A-A

GENERAL NOTES

Reference is made to the latest edition of the CRSI "Manual of Standard Practice" for recommended industry practices concerning reinforcing steel.

Use only the following types of bar supports:

1) Wire Bar Supports:

   a) Epoxy coated reinforcing: Class 1 Protection
   b) Non-epoxy coated reinforcing: Class 1, 2, or 3 Protection

2) Plastic Bar Supports

3) Supplementary bars

When securing epoxy coated reinforcement, use tie wires or metal clips that are epoxy or plastic coated.

Do not weld reinforcing steel to bar supports or to other reinforcing steel. Shop weld spacer frames for haunched slabs.

Tie bars at all intersections around the perimeter of each mat and at not less than 2'-0" centers or at every intersection, whichever is greater.

Where more than one length of bar support is required, lap the end legs so they are locked or tied together.

Use proper height supports to maintain the distance between the reinforcing and the formed surface or the top surface of deck slabs within ¼" of that indicated on the plans.

Spacings shown are maximums. Use sufficient supports, as determined by the Engineer, to retain the reinforcing steel in position.

Construct any platforms, required for the support of workers and/or equipment during concrete placement, directly on the forms and not on the reinforcing steel.

Designs and arrangements of Supports or Spacers other than as shown on this sheet, may be used with the permission of the Engineer.

NO.	DATE	REVISIONS	BY	APP'D
05	11-10-10	Column Bar Supports Required	J.P.J.	T.L.F.
04	12-01-05	Drilled Shaft Spiral Steel Placement	J.P.J.	K.F.H.
03	08-21-00	Added Pre-Cast Panel Detail	R.A.M.	K.F.H.

KANSAS DEPARTMENT OF TRANSPORTATION

SUPPORTS AND SPACERS FOR REINFORCING STEEL

BR120

FHWA APPROVAL			11-17-10	APP'D.		Terry L. Fleck	
DESIGNED	R.A.M.	DETAILED	R.A.A.	QUANTITIES		TRACED	R.A.A.
DESIGN CK.	L.R.R.	DETAIL CK.	R.A.M.	QUAN.CK.		TRACE CK.	R.A.M.

Plotted by : jdlabal 8-APR-2026 08:40
File : br120.dgn

STATE	PROJECT NO.	YEAR	SHEET NO.	TOTAL SHEETS
KANSAS	073 C-5357-01	2026	17	36

RECAPITULATION OF BRIDGE QUANTITIES

BRIDGE NUMBER	STATION	SEE SHEET NO.
000730633605440	49+75.00	7

** REMOVAL OF EXISTING STRUCTURES

STATION	LOCATION	DESCRIPTION
49+69.05	℄	12'-12' Timber Beam Bridge (TBMS). 24'-0" Roadway

** FOR INFORMATION ONLY

EARTHWORK

STATION to STATION	EXCAVATION					COMPACTION			NOT SUBGRADED THROUGH CUTS			⚹ EMBANKMENT (CU.YDS.)		⚠ PLACE. SELECT SOIL CU.YDS.
	COMMON		ROCK		CONTR. FURN. CU.YDS.	TYPE AA MR-CU.YDS.	TYPE B MR-90 CU.YDS.		COMM. CU.YDS.	TYPE AA CU.YDS.		INITIAL CONSOL.	SETTLE-MENT	
	CU.YDS.	VMF	CU.YDS.	VMF										
47+00.00 to 51+25.00	502	0.74					186							
TOTALS	502						186							

⚹ Subsidiary (see General Note). ⚠ See General note.

RECAPITULATION OF ROAD QUANTITIES

ITEM	QUANTITY	UNIT
Contractor Construction Staking	Lump Sum	L.S.
Field Office & Laboratory (Type C)	1	Each
Foundation Stabilization (Set Price)	1	Cu. Yd.
Mobilization	Lump Sum	L.S.
Removal of Existing Structures	Lump Sum	L.S.
Clearing & Grubbing	Lump Sum	L.S.
Common Excavation	502	Cu. Yd.
Compaction of Earthwork (Type B)(MR-90)	186	Cu. Yd.
Water (Grading) (Set Price)	1	M. Gal.
Curing Environment	Lump Sum	L.S.
Guardrail, SteelPlate	162.5	Lin. Ft.
Temporary Surfacing Material (Aggregate) (Set Price)	1	Cu. Yd.
Concrete For Seal Course (Set Price)	1	Cu. Yd.

For Summary of Guardrail See Sheet No. 4
For Temporary Erosion & Pollution Control Quantities See Sheet No. 18
For Seeding Quanitities See Sheet No. 27
For Traffic Control Plan & Quantities See Sheet No. 32

NO.	DATE	REVISIONS	BY	APP'D
02	01-14-08	Rem. Drainage Structure summary	S.W.K.	J.O.B.
01	01-09-91	Detailed on CADD	R.J.S.	J.O.B.

KANSAS DEPARTMENT OF TRANSPORTATION

SUMMARY OF QUANTITIES

RD050

FHWA APPROVAL	05-28-08	APP'D.	James O. Brewer
DESIGNED	DETAILED	QUANTITIES	TRACED B.N.B.
DESIGN CK.	DETAIL CK.	QUAN.CK.	TRACE CK. S.W.K.

Plotted by : jdlabal 8-APR-2026 08:41
File : rd050.dgn

STATE	PROJECT NO.	YEAR	SHEET NO.	TOTAL SHEETS
KANSAS	073 C-5357-01	2026	18	36

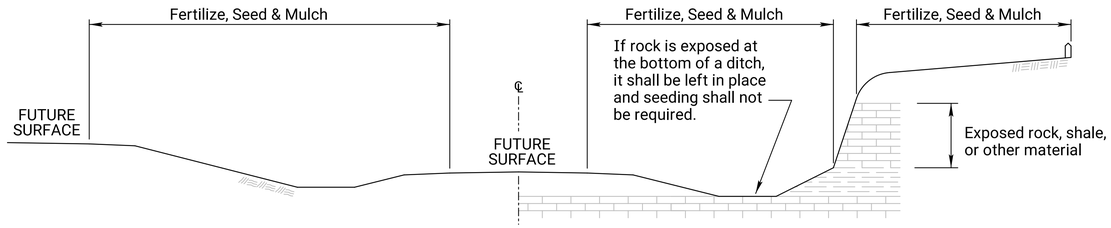

RAMP CUT SECTION

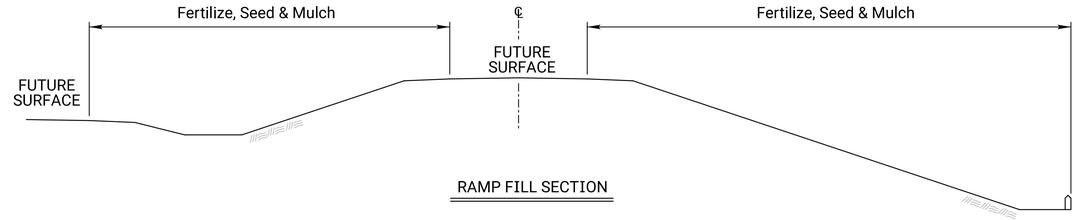

RAMP FILL SECTION

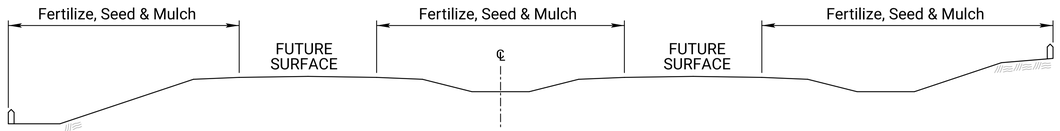

FILL SECTION — CUT SECTION

TYPICAL SECTION - DUAL PAVEMENT

FERTILIZER: A ratio and application rate that equals or exceeds the required minimum rate per acre of N, P_2O_5, K_2O listed in Summary of Quantities will be acceptable.

- ✱ - N = Nitrogen Rate of Application
- ✱✱ - P_2O_5 = Phosphorous Rate of Application
- ✱✱✱ - K_2O = Potassium Rate of Application

The Contractor will be required to finish areas of excavation, borrow and embankment in accordance with the specifications. Areas that require installation or construction of temporary water pollution control items will be finished in reasonable close conformity to the alignment, grade and cross section shown on the plans or as established by the Engineer.

CLT = Construction Limit Tract. This area is defined by the entire disturbed area of the project that requires seeding and erosion control measures to be placed. Any impervious areas (i.e. pavement, gravel, riprap, etc.) shall not be included in this measurement.

Slope = Defined by the area of the project that requires Class 1 erosion control material to be placed. This area shall be seeded using the Soil Erosion Mix prior to placement of the material. Drilling seed is preferred, however, broadcasting is acceptable if drilling is not possible.

Channel = Defined by the area of the project that requires Class 2 erosion control material to be placed. This area shall be seeded using the Soil Erosion Mix prior to placement of the material. Drilling seed is preferred, however, broadcasting is acceptable if drilling is not possible.

GENERAL NOTES

The entire disturbed area, excepting the paved or surfaced areas, steep rocky slopes and areas of undisturbed native sod or other desirable vegetation shall be fertilized (limed when required), seeded, and mulched. Soil preparation shall conform to the Standard Specifications.

Temporary seeding shall be done during any time of the year that the soil can be cultivated. After the temporary seeding has been completed on the entire project, permanent seeding shall be done during the normal seeding season.

MULCHING: Mulch shall be spread uniformly over all disturbed areas and punched in the soil, unless otherwise noted on the plans. The rate of application per acre, thickness in place, for the mulching materials is generally as follows:

1¾ - 2¼ Tons per Acre = 1½" loose depth spread uniformly over acre.

Agricultural products, such as native prairie hay, used for mulching and erosion control practices, excluding wood based mulch, shall meet the North American Weed Free Forage Standards.

Other vegetative mulches are acceptable only with the Engineer's concurrence.

The above rate is a guide. It will be at the discretion of the Engineer to determine what rate is sufficient for adequate protection of newly seeded areas.

SUMMARY OF SEEDING / EROSION CONTROL QUANTITIES

P.L.S. RATE/ ACRE		ACRES		BID ITEM	QUANTITY	UNIT
CLT	SL/CH	CLT	SL/CH			
	150		0.30	Temporary Fertilizer (16-20-0)	45.0	LB
				Temporary Seed Mix		LB
	109.9		0.30	Soil Erosion Mix	33.0	LB
				Erosion Control (Class 1, Type C)	1,408	SQ YD
				Erosion Control (Class 2, Type Y)		SQ YD
				Sediment Removal (Set Price)	1	CU YD
				Synthetic Sediment Barrier		LF
				Temporary Berm (Set Price)	1	LF
				Temporary Ditch Check (Rock)		TON
				Temporary Inlet Sediment Barrier		EACH
				Temporary Sediment Basin		CU YD
				Temporary Slope Drain		LF
				Temporary Stream Crossing		EACH
				Filter Sock (12")		LF
				Geotextile (Erosion Control)	500	SQ YD
				Silt Fence		LF
				SWPPP Design ✝		LS
				SWPPP Inspection ✝		EACH
				Water Pollution Control Manager ✝		EACH
900 lbs / acre				Mulch Tacking Slurry		LB
2 tons / acre				Mulching		TON
				Water (Erosion Control) (Set Price)	1	MGAL

NOTE: Projects less than 1 acre shall be bid as "Seeding" by the lump sum. See Permanent Seeding Summary of Seeding Quantities sheet LA850 for further details. HECP, Erosion Control (Class I or II) or Hay Mulch may be used at no additional cost to the project.

Geotextile (Erosion Control) shall be removed prior to placement of permanent slope protection.

Regreen and Quick Guard are the approved sterile wheatgrass products.

✝ If the total disturbed area of the project, not just the seeding area, is 1 acre or more, then these bid items must be included.

The amount of mulch in the bid quantities is estimated. (Acres of Seeding X 1.5 X 2 Tons/Acre).
The amount of mulch tacking slurry in the bid quantities is estimated. (Acres of Seeding X 1.5 X 900 Lbs/Acre).
The estimated quantity includes mulching associated with both temporary and permanent seeding operations. The total mulch and mulch tacking slurry required shall be determined in the field. The bid item for mulching and mulch tacking slurry shall be paid for according to the Standard Specifications.

Quantities for all erosion control items are estimated to give full flexibility for compliance with the NPDES permit. Final quantities will be determined in the field.

SOIL EROSION MIX

PLS RATE	NAME	QTY (lb)
0.5	SEED (BLUE GRAMA GRASS) (LOVINGTON)	0.15
4.5	SEED (BUFFALO GRASS) (TREATED)	1.35
45	SEED (RYE GRASS) (PERENNIAL)	13.50
2.6	SEED (PRAIRIE JUNE GRASS)	0.78
6.3	SEED (SIDE OATS GRAMA GRASS) (EL RENO)	1.89
45	SEED (FESCUE) (TALL) (ENDOPHYTE-FREE)	13.50
6	SEED (WESTERN WHEATGRASS) (BARTON)	1.80
109.9	Total (lb)	32.97

The Soil Erosion Mix is to be placed under the Class 1 and/or Class 2 erosion control material.

The Soil Erosion Mix consists of the Shoulder Area of the Permanent Seed Mix used on the project.

TEMPORARY SEED MIX

PLS RATE	NAME	QTY (lb)
	Canada Wildrye	
	Grain Oats	
	Sterile Wheatgrass	
	Total (lb)	

NO.	DATE	REVISIONS	BY	APP'D
05	12-02-25	Standard Sheet Update and Simplification	J.D.N.	M.K.L.
04	09-12-24	Added mulch tckng slurry rate & Temp Seed Mix Table	M.R.D.	M.K.L.
03	08-03-20	Added Note	M.R.D.	S.H.S.

KANSAS DEPARTMENT OF TRANSPORTATION

TEMPORARY EROSION AND POLLUTION CONTROL

LA852A

FHWA APPROVAL		12-05-25	APP'D.		Mervin Lare
DESIGNED	M.R.D.	DETAILED	M.R.D.	QUANTITIES	TRACED
DESIGN CK.	S.H.S.	DETAIL CK.	S.H.S.	QUAN.CK.	TRACE CK.

Plotted by : jdlabal 8-APR-2026 08:41
File : la852a.dgn

STATE	PROJECT NO.	YEAR	SHEET NO.	TOTAL SHEETS
KANSAS	073 C-5357-01	2026	19	36

EROSION CONTROL- CLASS 1, TYPE C

STATION TO STATION	SIDE	LENGTH	WIDTH	SQ YARD	Slope (Class 1)
47+00.00 TO 49+55.00	LT	255.0	14.8	419.3	Slope (Class 1)
47+00.00 TO 49+55.00	RT	255.0	16.7	473.2	Slope (Class 1)
49+95.00 TO 51+25.00	LT	130.0	18.2	262.9	Slope (Class 1)
49+95.00 TO 51+25.00	RT	130.0	17.5	252.8	Slope (Class 1)
TOTAL EROSION CONTROL (CLASS 1, TYPE C) =				1,408.2	

NO.	DATE	REVISIONS	BY	APP'D
01	09-12-24	Modified table to add Slope for Cl. 1 Blanket Install.	M.E.C.	M.L.

KANSAS DEPARTMENT OF TRANSPORTATION

EROSION CONTROL SEEDING-SODDING

LA852A-EC

FHWA APPROVAL		03-27-25	APP'D.		Scott H. Shields
DESIGNED	M.R.M.	DETAILED M.R.M.	QUANTITIES	TRACED	M.R.M.
DESIGN CK.	S.H.S.	DETAIL CK. S.H.S.	QUAN.CK.	TRACE CK.	S.H.S.

Plotted by : jdlabal 8-APR-2026 08:41
File : la852a-ec.dgn

STATE	PROJECT NO.	YEAR	SHEET NO.	TOTAL SHEETS
KANSAS	073 C-5357-01	2026	20	36

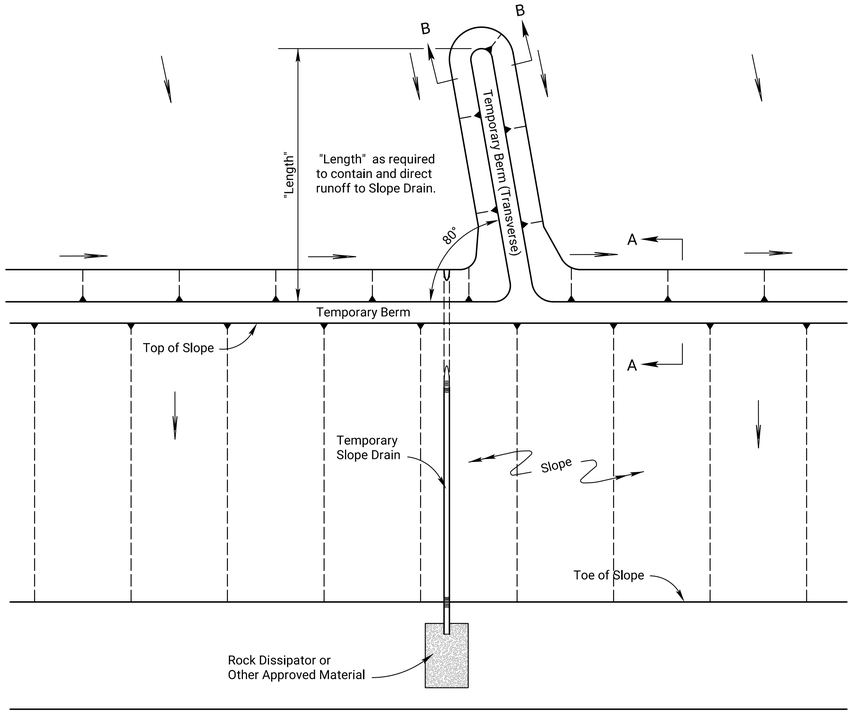

TYPICAL PLAN VIEW OF TEMPORARY BERM AND TEMPORARY SLOPE DRAIN

NO SCALE

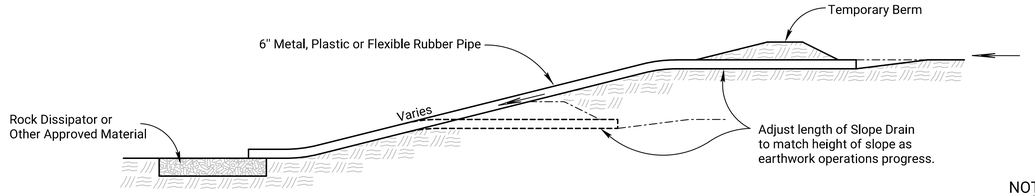

TYPICAL PROFILE OF TEMPORARY SLOPE DRAIN

NO SCALE

NOTES:

1) Temporary Slope Drain and Temporary Berm may be used on either project foreslopes or project backslopes.

2) Discharge of Slope Drains shall be into stabilized ditch or area, or into Sediment Basin.

3) Pipe shall be secured in place as approved by Engineer.

4) Temporary Berms under 2,000 feet shall be bid by Set Price.

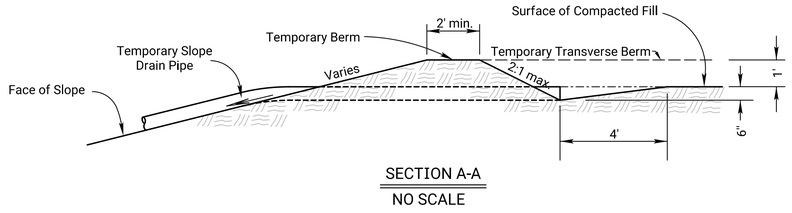

SECTION A-A

NO SCALE

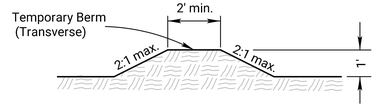

SECTION B-B

NO SCALE

TYPICAL PROFILE OF TEMPORARY BERM

NO SCALE

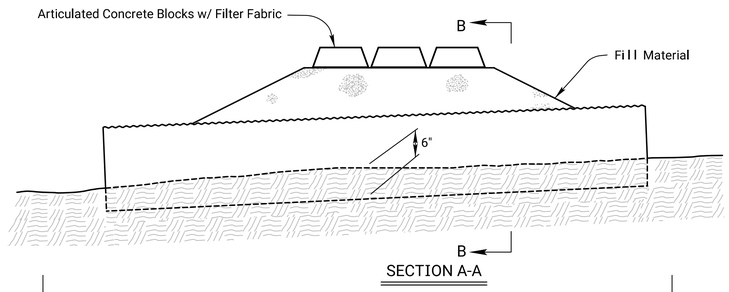

SECTION A-A

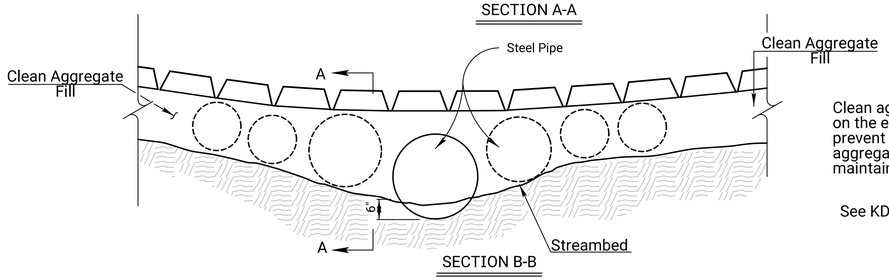

SECTION B-B

TEMPORARY STREAM CROSSING (ARTICULATED CONCRETE BLOCKS)

NO SCALE

Pipe size may vary.

Place 1 pipe buried 6" into stream bottom, in the lowest point of the channel to allow the passage of aquatic organisms, with additional pipes placed along the remainder of the stream channel bottom such that ordinary high water (OHW) flows designated in the Contract Documents shall flow through the pipes without overtopping the crossing.

Clean aggregate fill will extend a minimum of 50' on the entrance and exit side of the crossing to prevent tracking. The aggregate shall be clean aggregate and a minimum of 6" thick and will be maintained through the use of the crossing.

See KDOT Specifications for more information.

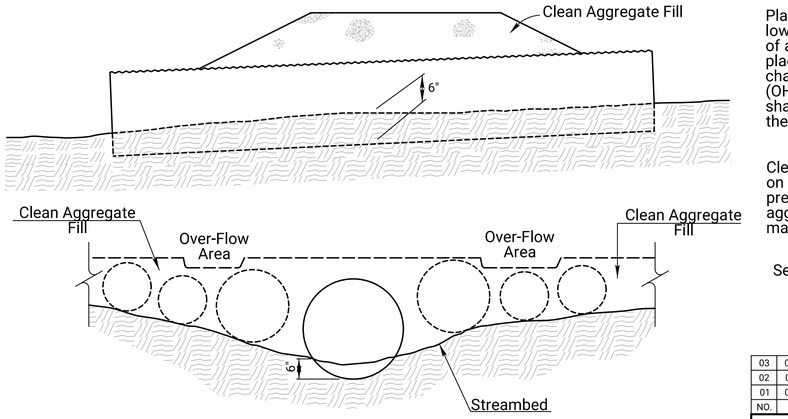

SECTION B-B

TEMPORARY STREAM CROSSING (AGGREGATE)

NO SCALE

Pipe size may vary.

Place 1 pipe buried 6" into stream bottom, in the lowest point of the channel to allow the passage of aquatic organisms, with additional pipes placed along the remainder of the stream channel bottom such that ordinary high water (OHW) flows designated in the Contract Documents shall flow through the pipes without overtopping the crossing.

Clean aggregate fill will extend a minimum of 50' on the entrance and exit side of the crossing to prevent tracking. The aggregate shall be clean aggregate and a minimum of 6" thick and will be maintained through the use of the crossing.

See KDOT Specifications for more information.

NO.	DATE	REVISIONS	BY	APP'D
03	01-21-22	Temp Stream Crossing - Clean Aggregate Fill Note Added	M.R.D.	M.L.
02	08-24-21	Temp Stream Crossing - Clean Aggregate Fill Note Added	M.R.D.	M.L.
01	06-11-13	Revised Standard	M.R.M.	S.H.S.

KANSAS DEPARTMENT OF TRANSPORTATION

TEMPORARY EROSION AND POLLUTION CONTROL TEMPORARY SLOPE DRAIN, TEMPORARY STREAM CROSSING (AGGREGATE)

LA852B

FHWA APPROVAL	01-21-22	APP'D.	Mervin Lare
DESIGNED	DETAILED	QUANTITIES	TRACED
DESIGN CK.	DETAIL CK.	QUAN.CK.	TRACE CK.

Plotted by: jdlabal 8-APR-2026 08:41
File : la852b.dgn

STATE	PROJECT NO.	YEAR	SHEET NO.	TOTAL SHEETS
KANSAS	073 C-5357-01	2026	21	36

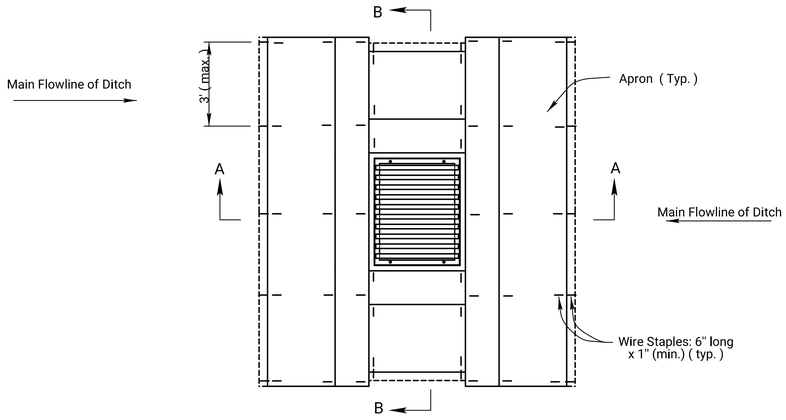

PLAN

TEMPORARY I NLET SEDI MENT BARRI ER
(TRI ANGULAR SI LT DI KE METHOD)

NO SCALE

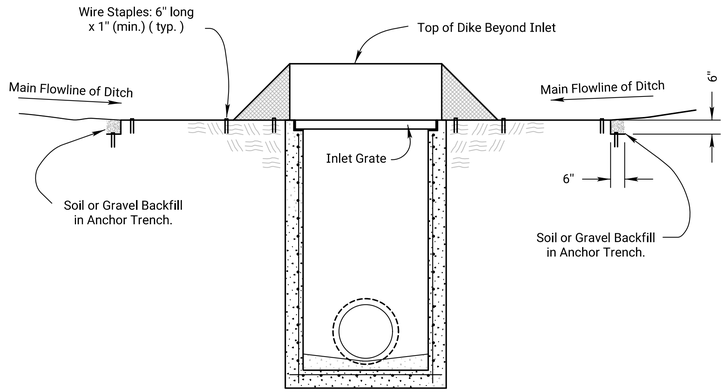

SECTION A - A

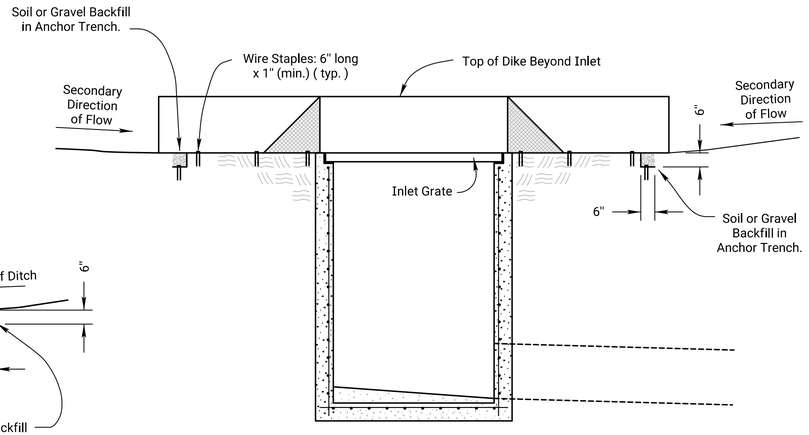

SECTION B - B

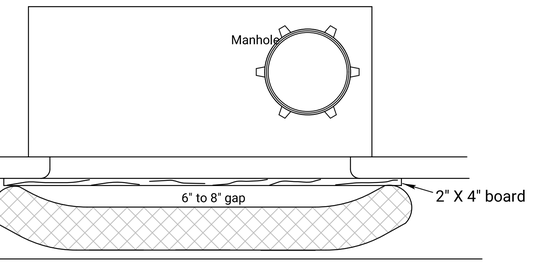

Bags = synthetic net (3mm mesh) or burlap bags

Rock = approximately 1" to 2" diameter

CURB INLET PROTECTION

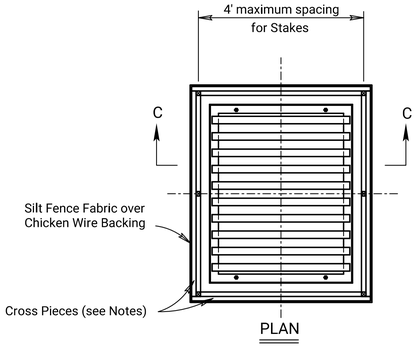

PLAN

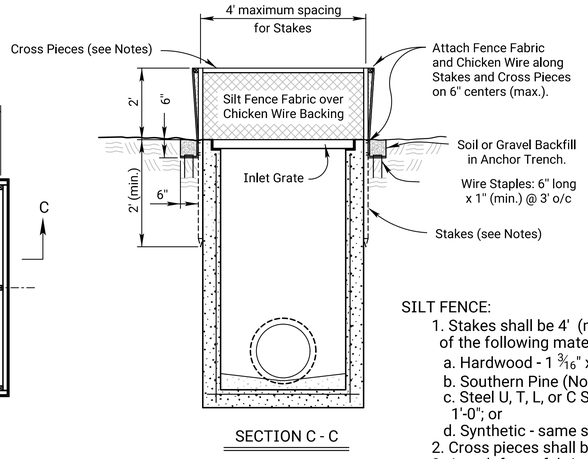

SECTION C - C

TEMPORARY I NLET SEDI MENT BARRI ER
(SI LT FENCE METHOD)

NO SCALE

SILT FENCE:

1. Stakes shall be 4' (min.) long and of one of the following materials:
   a. Hardwood - 1 3/16" x 1 3/16";
   b. Southern Pine (No. 2) - 2 5/8" x 2 5/8";
   c. Steel U, T, L, or C Section - .95 lbs. per 1'-0"; or
   d. Synthetic - same strength as wood stakes.
2. Cross pieces shall be of same material as stakes.
3. Attach fence fabric securely on 6" centers (max).
4. Use of high flow material is acceptable.
5. Refer to plan sheets to estimate the length of silt fence required.

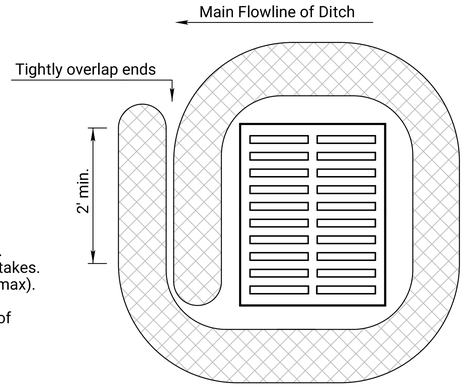

Drop inlet use
1'-6" TO 1'-8" diameter log

BIODEGRADABLE LOG/FILTER SOCK
DROP INLET PROTECTION

Note: 25% of log shall be keyed into ground during installation.

Stake every 4'

1. If multiple gravel bags are required, place them in such a way that no gaps are evident.
2. Height of bags (8" minimum diameter) must not be above top of curb.
3. Alternative products may be used other than gravel bags such as the "Gutter Buddy". Products must be approved by the Engineer.
4. Curb inlet protection will be measured and paid for as Filter Sock.

Material Requirements
Use 100% shredded mulch or other non-compost biodegradable material as fill for logs.
No compost or fines.
No hay or straw.
Do not use material which prohibits water infiltration.
Log Mesh: Use mesh with ¼" openings or larger. Mesh must allow water infiltration but also hold fill material in place.

NO.	DATE	REVISIONS	BY	APP'D
03	09-26-19	Changed Direction of Main Flowline of Ditch Arrow	M.R.D.	S.H.S.
02	03-10-15	Revised Standard	R.A.	S.H.S.
01	06-01-13	Revised Standard	M.R.M.	S.H.S.

KANSAS DEPARTMENT OF TRANSPORTATION

TEMPORARY EROSION AND POLLUTION CONTROL, TEMPORARY INLET SEDIMENT BARRIER (SILT FENCE) TEMP. INLET SEDIMENT BARRIER (T.S.D.)

LA852C

FHWA APPROVAL		03-10-15	APP'D.	Scott H. Shields	
DESIGNED	R.A.	DETAILED	R.A.	QUANTITIES	TRACED
DESIGN CK.	S.H.S.	DETAIL CK.	S.H.S.	QUAN.CK.	TRACE CK.

Plotted by : jdlabal 8-APR-2026 08:41
File : la852c.dgn

STATE	PROJECT NO.	YEAR	SHEET NO.	TOTAL SHEETS
KANSAS	073 C-5357-01	2026	22	36

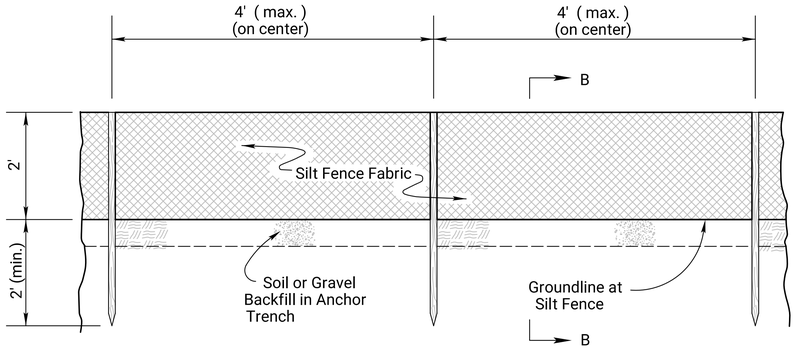

TYPICAL ELEVATION

SILT FENCE BARRIER

NO SCALE

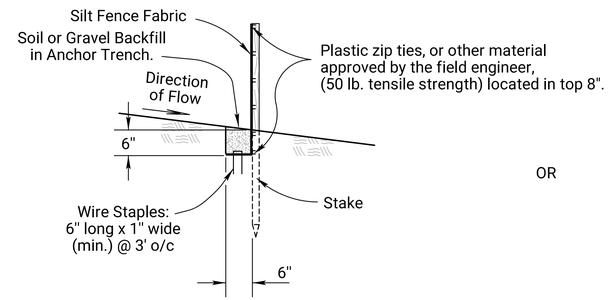

SECTION B-B

OR

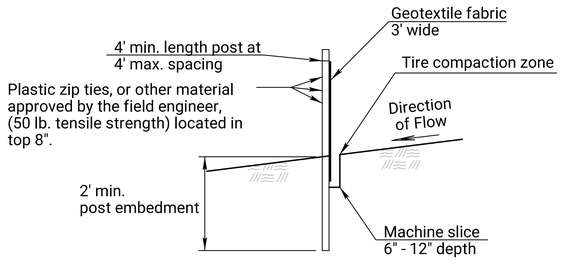

SECTION B-B

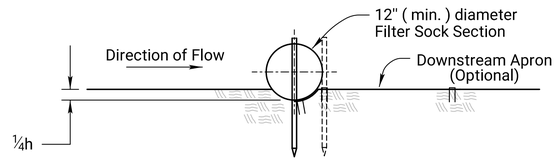

SECTION A - A

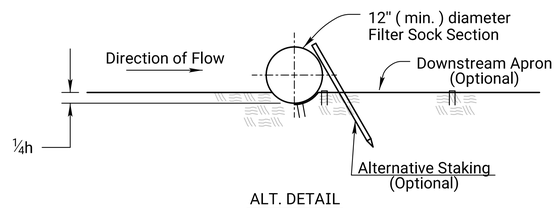

ALT. DETAIL

OPTIONAL

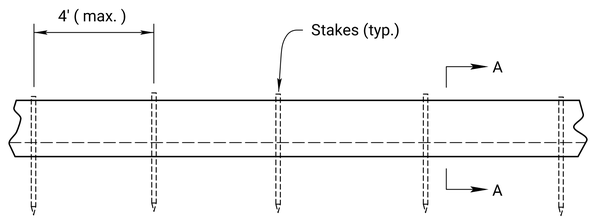

TYPICAL ELEVATION

FILTER SOCK SLOPE INTERRUPTIONS

INSTALLATION NOTES

SILT FENCE:

1. Stakes shall be 4' (min.) long and of one of the following materials:
   a. Hardwood - 1 3/16" x 1 3/16";
   b. Southern Pine (No. 2) - 2 5/8" x 2 5/8";
   c. Steel U, T, L, or C Section - .95 lbs. per 1'-0"; or
   d. Synthetic - same strength as wood stakes.
2. Attach fence fabric with 3 zip ties within the top 8" of the fence
   Alternate attachment methods may be approved by the Engineer on aperformance basis.
3. Use of high flow material is acceptable.
4. Refer to plan sheets to estimate the length of silt fence required.

FILTER SOCK

1. Place filter sock tightly together minimum overlap of 18".
2. Wood stakes shall be 2" x 2" (nom.).
3. Refer to plan sheets to estimate length of filter sock required.
4. Each sock (except compost filter socks) should be keyed into the ground at a minimum of 25% of its height. Compost filter socks should be placed on smooth prepared ground with no gaps between the sock and soil.
5. Length of stakes should be 2 times the height of the sock at a minimum with minimum ground embedment equal to the height of the sock.

Filter Sock Slope Interruptions

		PRODUCT
		12" Filter Sock (ft)
Slope Gradient	≤4H:1V	60
	3H:1V	45

Deviations should be approved by the Field Engineer.

GENERAL NOTES

1) Slope interruptions shall be placed along contour lines, with a short section turned upgrade at each end of the barrier.
2) The maximum length of the slope interruptions shall not exceed 250 feet, and the barrier ends need to be staggered.
3) Interruptions damaged by Contractor's negligence, including improper maintenance or lack of maintenance, shall be repaired immediately by Contractor at no additional cost to KDOT.
4) Agricultural products, such as native prairie hay, used for mulching and erosion control practices, excluding wood based mulch, shall meet the North American Weed Free Forage Standards.

NO.	DATE	REVISIONS	BY	APP'D
04	12-02-25	Standard Sheet Update and Simplification	J.D.N.	M.K.L.
03	06-28-16	Revised Standard	R.A.	S.H.S.
02	03-01-15	Revised Standard	R.A.	S.H.S.

KANSAS DEPARTMENT OF TRANSPORTATION

TEMPORARY EROSION AND POLLUTION CONTROL SLOPE INTERRUPTIONS FILTER SOCKS / SILT FENCE

LA852D

FHWA APPROVAL			12-05-25	APP'D.		Mervin Lare	
DESIGNED	M.R.D.	DETAILED	M.R.D.	QUANTITIES		TRACED	
DESIGN CK.	S.H.S.	DETAIL CK.	S.H.S.	QUAN.CK.		TRACE CK.	

Plotted by : jdlabal 8-APR-2026 08:41
File : la852d.dgn

STATE	PROJECT NO.	YEAR	SHEET NO.	TOTAL SHEETS
KANSAS	073 C-5357-01	2026	23	36

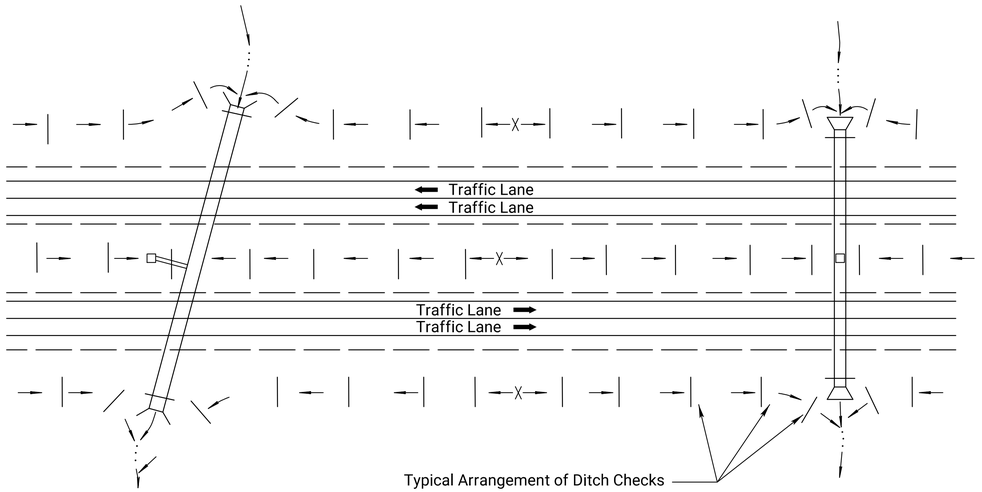

TYPICAL DITCH CHECK LAYOUT PLAN
NO SCALE

12" FILTER SOCK CHECK SPACING	
DITCH ℄ SLOPE (%)	SPACING INTERVAL (FEET)
1.0	110
2.0	55
3.0	35
4.0	25
5.0	20

NOTE: Use this spacing for all except Rock Ditch Checks.

GENERAL NOTES

1) The choice of ditch check methods is at the option of the Contractor.

2) Use only rock checks in situations where the ditch slope is 6 percent or greater.

2) Ditch checks damaged by Contractor's negligence, including improper maintenance or lack of maintenance, shall be repaired by Contractor at no extra cost to KDOT.

NO.	DATE	REVISIONS	BY	APP'D
04	12-02-25	Standard Sheet Update and Simplification	J.D.N.	M.K.L.
03	08-10-16	Revised Standard	R.A.A.	S.H.S.
02	06-28-16	Revised Standard	R.A.A.	S.H.S.

KANSAS DEPARTMENT OF TRANSPORTATION

TEMPORARY EROSION AND POLLUTION CONTROL DITCH CHECKS

LA852E

FHWA APPROVAL			12-05-25	APP'D.	Mervin Lare		
DESIGNED	S.H.S.	DETAILED	R.A.A.	QUANTITIES		TRACED	R.A.A.
DESIGN CK.	S.H.S.	DETAIL CK.	S.H.S.	QUAN.CK.		TRACE CK.	S.H.S.

Plotted by : jdlabal 8-APR-2026 08:41
File : la852e.dgn

STATE	PROJECT NO.	YEAR	SHEET NO.	TOTAL SHEETS
KANSAS	073 C-5357-01	2026	24	36

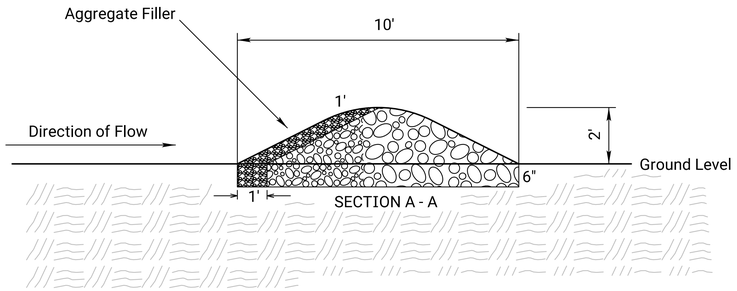

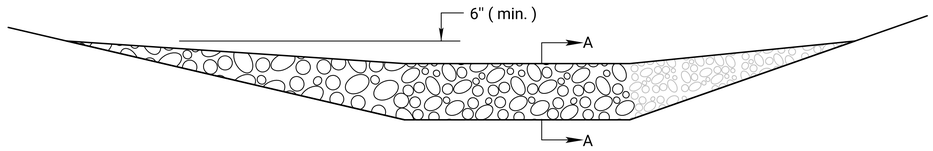

TYPICAL ELEVATION

ROCK DITCH CHECK

NO SCALE

TEMPORARY ROCK DITCH CHECK SPACING	
DITCH ℄ SLOPE (%)	SPACING INTERVAL (FEET)
5.0	60
6.0	50
7.0	43
8.0	36
9.0	33
10.0	29
NOTE: Use this spacing for Rock Ditch Checks only.	

ROCK DITCH CHECK NOTES

1. Rock shall be clean aggregate, D50-6" and aggregate filler.
2. Place rock in such manner that water will flow over, not around ditch check.
3. Do not use rock ditch checks in clear zone.
4. Excavation: The ditch area shall be reshaped to fill any eroded areas. Prior to placement of the rock, the ditch shall be excavated to the dimensions of the Rock Ditch Check and to a minimum depth of 6" (150mm). After placement of the rock, backfill and compact any over-excavated soil to ditch grade. This work shall be subsidiary to the bid item Temporary Ditch Check (Rock).
5. Aggregate excavated on site may be used as an alternate to the 6" rock, if approved by the Engineer.
6. The Engineer may approve the use of larger aggregates for the downstream portion of the check when conditions warrant their use.
7. When the use of larger rock is approved, D50-6" rock will be placed between the larger aggregate and the aggregate filler.
8. Aggregate filler will be placed on the upstream face of the ditch check. Aggregate filler will comply with Filter Course Type I, Division 1114.

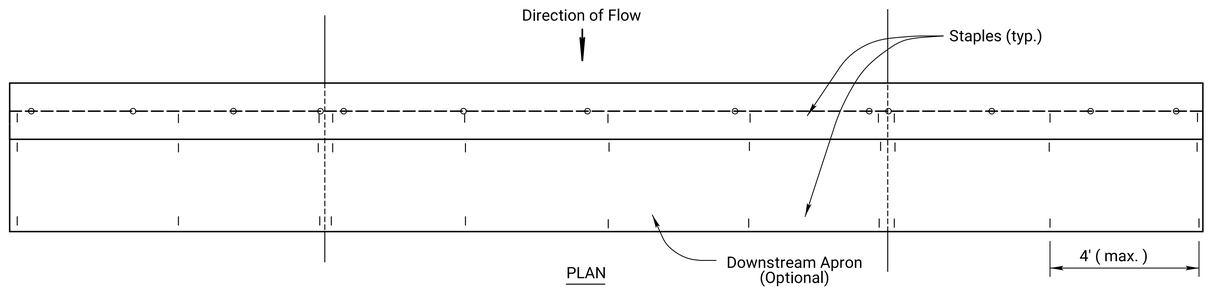

PLAN

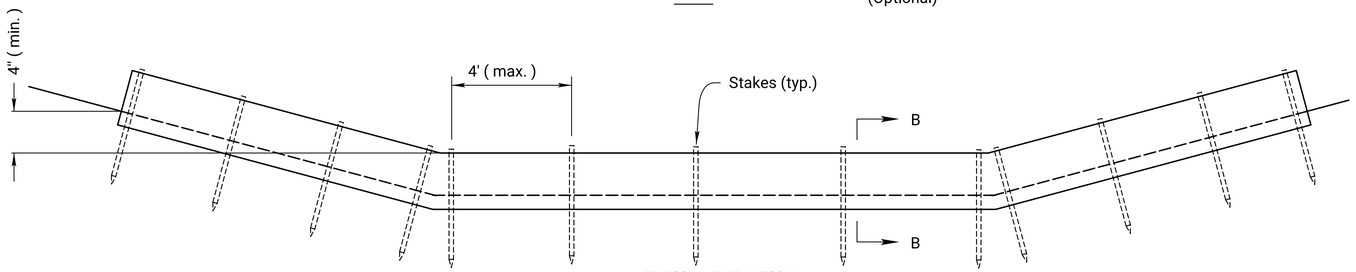

TYPICAL ELEVATION

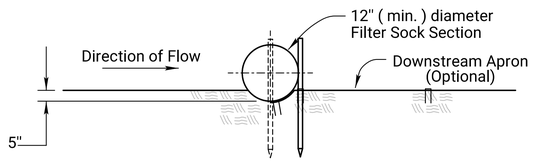

SECTION B - B

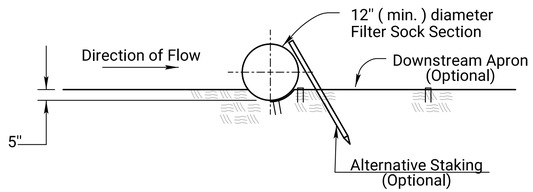

ALT. DETAIL
OPTIONAL

FILTER SOCK DITCH CHECK

NO SCALE

FILTER SOCK DITCH CHECK NOTES

1. Use as many filter sock sections as necessary to ensure water does not flow around end of ditch check.
2. Overlap sections a minimum of 18".
3. Stakes shall be wood or steel according to Section 2114 of the Standard Specifications. Length of stakes shall be a minimum of 2 x the diameter of the log.
4. Use Erosion Control (Class 1) (Type C) as the downstream apron when required.
5. A downstream apron is required when directed by the Engineer. Apron material will be paid at the contract unit price.
6. Each sock (except compost filter socks) should be keyed into the ground at a minimum of 25% of its height. Compost filter socks should be placed on smooth prepared ground with no gaps between the sock and soil.

NO.	DATE	REVISIONS	BY	APP'D
04	12-02-25	Removed Biodegradable Log	J.D.N.	M.K.L.
03	11-19-20	Revised Standard	M.R.D.	M.K.L.
02	08-10-16	Revised Standard	R.A.A.	S.H.S.

KANSAS DEPARTMENT OF TRANSPORTATION

TEMPORARY EROSION AND POLLUTION CONTROL ROCK DITCH CHECKS FILTER SOCK DITCH CHECKS

LA852G

FHWA APPROVAL			12-05-25	APP'D.		Mervin Lare	
DESIGNED	M.K.L.	DETAILED	D.K.	QUANTITIES		TRACED	R.A.A.
DESIGN CK.	M.K.L.	DETAIL CK.	M.K.L.	QUAN.CK.		TRACE CK.	R.A.A.

Plotted by : jdlabal 8-APR-2026 08:41
File : la852g.dgn

STATE	PROJECT NO.	YEAR	SHEET NO.	TOTAL SHEETS
KANSAS	073 C-5357-01	2026	25	36

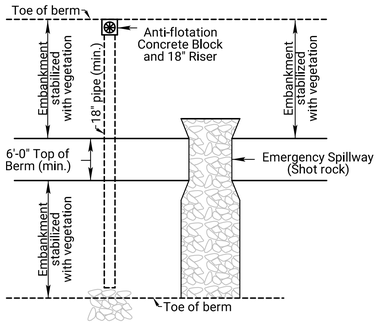

SEDIMENT STORAGE BASIN (PLAN)

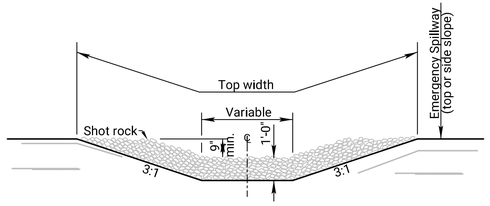

CROSS SECTION (EMERGENCY SPILLWAY)

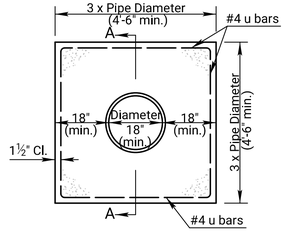

CONCRETE ANTI-SEEP COLLAR

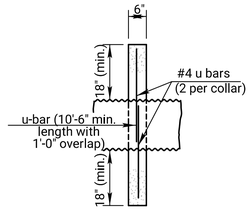

SECTION A-A

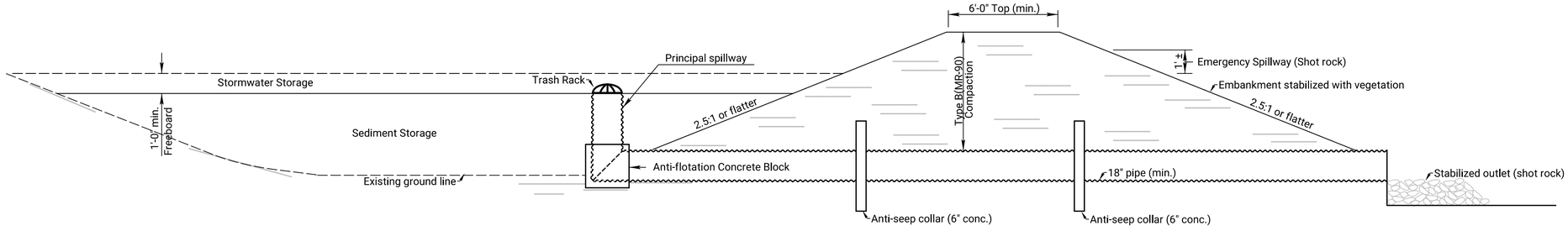

SEDIMENT STORAGE BASIN (ELEVATION)

NOTES:

1) Temporary Sediment Basins shall be constructed at locations as directed by the Engineer or as approved in the SWPPP Schedule. All work and materials necessary, including but not limited to, the fill material, compaction, drainage pipes, aggregates and all other incidentals necessary to construct the basin, shall be paid as "Temporary Sediment Basin".

2) Lengths and top dimensions shall be determined in the field by the Engineer.

3) Skimmer dewatering device required and must be used reguardless the size of the drainage area.

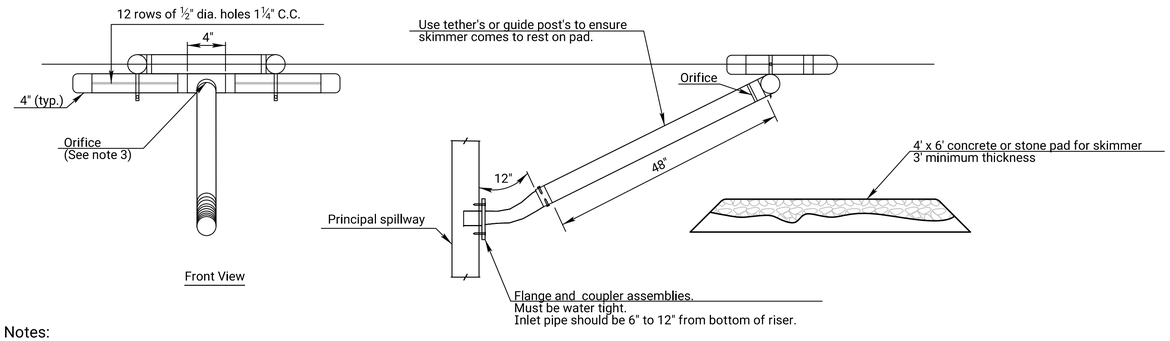

Notes:

1. All P.V.C. pipes are to be schedule 40.
2. HDPE flexible drain pipes is to be attached to the pond outlet structure with water-tight connections.
3. The orifice shall be sized of to provide drawdown time to 2 to 5 days and approved by the engineer.
4. Other skimmer designs maybe used that dewaters from the surface at a controlled rate. The design must be approved by the engineer.

SKIMMER DEWATERING DEVICE

SEDIMENT STORAGE BASIN LOCATIONS

STATION TO STATION	SIDE	REQUIRED STORAGE CAPACITY

NO.	DATE	REVISIONS	BY	APP'D
02	09-03-13	Added Skimmer Dewatering Device	M.R.M.	S.H.S.
01	07-17-13	Revised Standard	M.R.M.	S.H.S.

KANSAS DEPARTMENT OF TRANSPORTATION

TEMPORARY EROSION AND POLLUTION CONTROL SEDIMENT STORAGE BASIN

LA852H

FHWA APPROVAL			09-24-13	APP'D.	
DESIGNED	B.B.	DETAILED	B.B.	QUANTITIES	TRACED B.B.
DESIGN CK.	S.H.S.	DETAIL CK.	S.H.S.	QUAN.CK.	TRACE CK. S.H.S.

Plotted by: jdlabal 8-APR-2026 08:41
File : la852h.dgn

STATE	PROJECT NO.	YEAR	SHEET NO.	TOTAL SHEETS
KANSAS	073 C-5357-01	2026	26	36

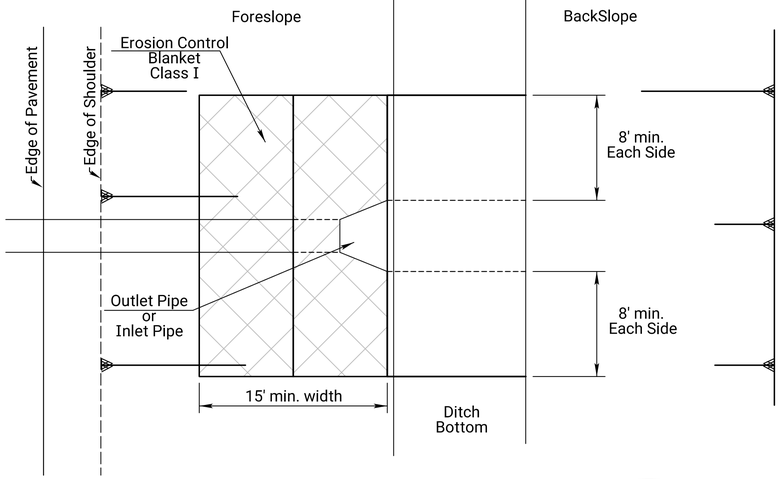

PARTIAL PLAN PIPE

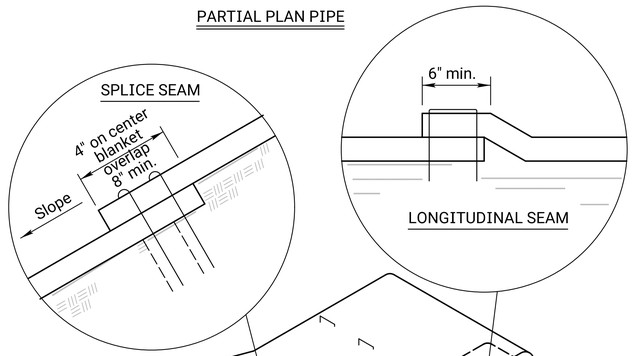

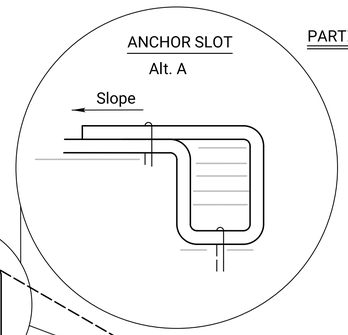

ISOMETRIC VIEW



Limits of Erosion Control Blanket

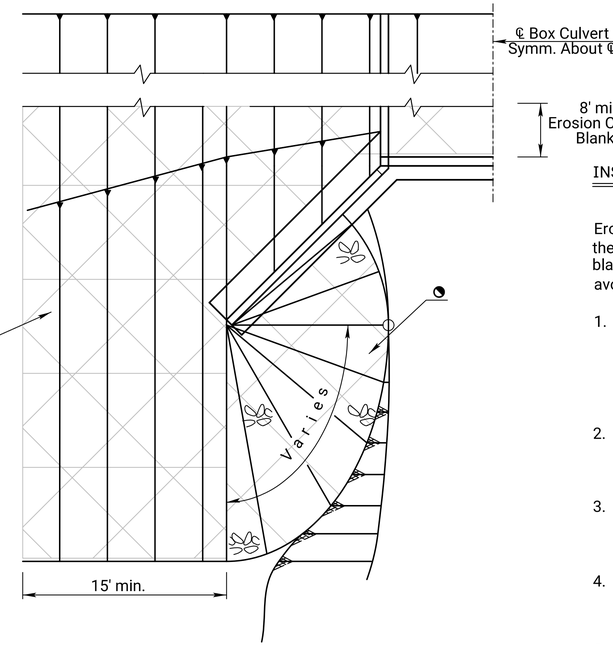

PARTIAL PLAN BOX CULVERT

◔ Erosion Control Class I may be omitted if the area is immediately covered by permanent slope protection (where directed by the plans).

INSTALLATION DETAILS FOR EROSION CONTROL CLASS 1

Erosion Control Blankets shall be laid loosely in the direction of the slope, beginning at the bottom of the slope. In order for blanket to be in contact with the soil, lay blanket loosely, avoiding stretching.

1. ANCHOR SLOTS: The top of the blanket should be "slotted in" at the top of the slope and anchored in place with anchors 6 inches apart. The slots should be 6 inches wide x 6 inches deep with the blanket anchored in the bottom of the slot, then backfilled, tamped and seeded.
2. LONGITUDINAL SEAMS: The edges of the blanket should overlap each other a minimum of 6 inches, with anchors catching the edges of both blankets.
3. SPLICE SEAM: When splices are necessary, overlap end a minimum of 8 inches in direction of water flow. Stagger splice seams.
4. TERMINAL FOLD: The bottom edge of the blanket shall be turned under a minimum of 4 inches, then anchored in place with anchors 9 inches apart.
5. TYPICAL ANCHORS: Anchor design shall be as recommended by the manufacturer.
6. STAPLE CHECK: ‡Establish Staples in 2 rows 4" on center apart. Staple Checks - shall be 30' apart.

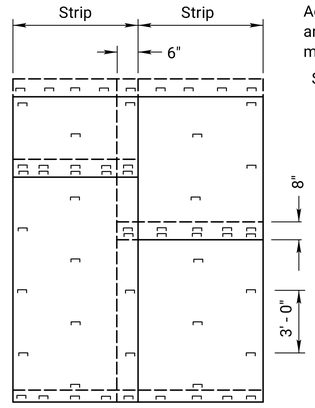

PLAN VIEW - ANCHORING DIAGRAM

NOTE:
Agricultural products, such as native prairie hay, used for mulching and erosion control practices, excluding wood based mulch, shall meet the North American Weed Free Forage Standards.

Single post ring and shank staple is acceptable.

NO.	DATE	REVISIONS	BY	APP'D
04	03-01-15	Revised Standard	R.A.A.	S.H.S.
03	02-23-15	Revised Standard	R.A.A.	S.H.S.
02	09-15-14	Revised Standard	M.R.M.	S.H.S.

KANSAS DEPARTMENT OF TRANSPORTATION

INSTALLATION DETAIL EROSION CONTROL CLASS 1 SLOPE PROTECTION

LA855

FHWA APPROVAL			03-10-15	APP'D.		Scott H. Shields	
DESIGNED	R.A.A.	DETAILED	R.A.A.	QUANTITIES		TRACED	R.A.A.
DESIGN CK.		DETAIL CK.		QUAN.CK.		TRACE CK.	R.A.A.

Plotted by : jdlabal 8-APR-2026 08:41
File : la855.dgn

STATE	PROJECT NO.	YEAR	SHEET NO.	TOTAL SHEETS
KANSAS	073 C-5357-01	2026	27	36

SUMMARY OF SEEDING QUANTITIES

P.L.S. RATE/ACRE	ACRES	BID ITEM	QUANTITY	UNIT
		This project is entirely blanketed and seeded with the Erosion Control Mix, eliminating the need for permanent seeding operations. See Sheet LA852A.		

District One/Four

District One/Four Shoulder Mix

P.L.S. RATE	Name	QTY (lb)
0.5	Blue Grama Grass Seed (Lovington)	
4.5	Buffalograss Seed (Treated)	
45	Perennial Ryegrass	
2.6	Prairie Junegrass	
6.3	Side Oats Grama Grass Seed (El Reno)	
45	Tall Fescue (Endophyte Free)	
6	Western Wheatgrass Seed (Barton)	
109.9	TOTAL (lb)	

District One/Four Other Mix

P.L.S. RATE	Name	QTY (lb)
2	Big Bluestem Grass Seed (Kaw)	
10	Canada Wildrye Grass Seed	
2	Indiangrass Seed (Osage)	
2	Little Bluestem Grass Seed (Aldous)	
6.3	Side Oats Grama Grass Seed (El Reno)	
10	Sterile Wheatgrass (Regreen/Quick Guard)	
0.7	Switchgrass Seed (Blackwell)	
0.5	Tall Dropseed	
4	Western Wheatgrass Seed (Barton)	
37.5	TOTAL (lb)	

District Two/Five

District Two/Five Shoulder Mix

P.L.S. RATE	Name	QTY (lb)
0.5	Blue Grama Grass Seed (Lovington)	
4.5	Buffalograss Seed (Treated)	
45	Perennial Ryegrass	
2.6	Prairie Junegrass	
7	Side Oats Grama Grass Seed (El Reno)	
45	Tall Fescue (Endophyte Free)	
6	Western Wheatgrass Seed (Barton)	
0.5	Sand Dropseed Grass Seed	
111.1	TOTAL (lb)	

District Two/Five Other Mix

P.L.S. RATE	Name	QTY (lb)
2	Big Bluestem Grass Seed (Kaw)	
10	Canada Wildrye Grass Seed	
2	Indiangrass Seed (Osage)	
2	Little Bluestem Grass Seed (Aldous)	
5.1	Sand Bluestem Seed	
0.5	Sand Dropseed Grass Seed	
2	Sand Lovegrass Seed	
7	Side Oats Grama Grass Seed (El Reno)	
10	Sterile Wheatgrass (Regreen/Quick Guard)	
1	Switchgrass Seed (Blackwell)	
0.5	Tall Dropseed Seed	
4	Western Wheatgrass Seed (Barton)	
46.1	TOTAL (lb)	

District Three/Six

District Three/Six Shoulder Mix

P.L.S. RATE	Name	QTY (lb)
1	Blue Grama Grass Seed (Lovington)	
24.5	Buffalograss Seed (Treated)	
1	Sand Dropseed Grass Seed	
6.3	Side Oats Grama Grass Seed (El Reno)	
10	Sterline Wheatgrass (Regreen/Quick Guard)	
6	Western Wheatgrass Seed (Barton)	
48.8	TOTAL (lb)	

District Three/Six Other Mix

P.L.S. RATE	Name	QTY (lb)
2	Big Bluestem Grass Seed (Kaw)	
1	Blue Grama Grass Seed (Lovington)	
8.8	Buffalograss Seed (Treated)	
2	Indiangrass Seed (Osage)	
2.5	Little Bluestem Grass Seed (Aldous)	
5.1	Sand Bluestem Grass Seed (Garden)	
1	Sand Dropseed Grass Seed	
6.3	Side Oats Grama Grass Seed (El Reno)	
10	Sterile Wheatgrass (Regreen/Quick Guard)	
1	Switchgrass Seed (Blackwell)	
4	Western Wheatgrass Seed (Barton)	
43.7	TOTAL (lb)	

GENERAL NOTES

The entire disturbed area, excepting the paved or surfaced areas, steep rocky slopes and areas of undisturbed native sod or other desirable vegetation shall be fertilized (limed when required), seeded and mulched. Soil preparation shall conform to the Standard Specifications except as noted below.

All borrow areas shown on the plans are to be fertilized, seeded, and mulched. However, operation in borrow areas where crops are growing may be omitted when requested by the owner.

If temporary cover has provided stable slopes with no erosion, seed the permanent grasses into the existing cover. If there has been erosion that requires repair prior to seeding, then it may be necessary to regrade the area, resulting in bare ground.

KDOT District Shoulder mix is typically placed 15 feet for 2-lane roads and 30 feet for 4-lane roads. Includes outside roadsides, turfed potions of shoulders, and turfed portion of the median.

KDOT District "Other" mix is designated as all other turf areas, except the Shoulder. Usually includes a Native Wildflower Mix.

NOTE: Projects less than 1 acre shall be bid as "Seeding" by the lump sum. All disturbed areas shall be seeded, fertilized and mulched at the listed rate per acre. The acres are estimated.

Refer to KDOT Standard Specificiations, Division 900, Section 905 "Seeding", and Section 907 "Sodding", for the seeding and sodding seasons.

*See LA852A for mulching quantity. The quantity of mulch is estimated (Acres of Seeding x 1.5 x 2 tons/acre). The total mulch required shall be determined in the field. The bid item for mulching shall be paid for according to the KDOT Standard Specifications.

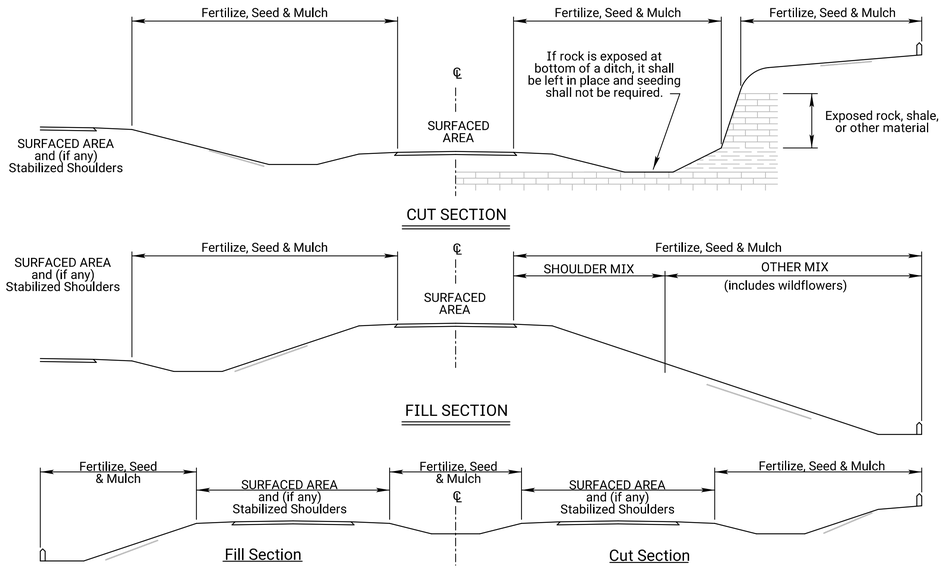

NATIVE WILDFLOWER MIX 1

PLS RATE	NAME	QTY (lb)
0.3	Butterfly Milkweed	
0.3	Common Milkweed	
0.3	Black Eyed Susan	
0.5	Blanket Flower	
0.5	False Sunflower	
0.5	Lance-Leaf Coreopsis	
0.2	Maximilian Sunflower	
0.1	New England Aster	
0.2	Pinnate Prairie Coneflower	
0.2	Plains Coreopsis	
0.6	Purple Coneflower	
0.3	Upright Prairie Coneflower	
0.3	Lemon Mint	
0.2	Pitcher Sage	
0.2	Wild Bergamot	
1.0	Illinois Bundleflower	
0.2	Common Evening Primrose	
0.1	Hoary Verbena	
0.8	Purple Prairie Clover	
0.3	Roundhead Lespedeza	
3.0	Showy Partridge Pea	
0.2	White Prairie Clover	
10.3	Total (lb)	

NATIVE WILDFLOWER MIX 2

PLS RATE	NAME	QTY (lb)
0.3	Butterfly Milkweed	
0.3	Black Eyed Susan	
0.5	Black Sampson Coneflower	
1.0	Blanket Flower	
0.2	Maximilian Sunflower	
0.2	Plains Coreopsis	
0.2	Upright Prairie Coneflower	
0.2	Western Yarrow	
0.3	Lemon Mint	
0.4	Pitcher Sage	
1.5	Illinois Bundleflower	
0.2	Common Evening Primrose	
1.0	Blue Wild Indigo	
0.4	Leadplant	
0.4	Purple Prairie Clover	
0.3	White Prairie Clover	
7.4	Total (lb)	

Package and deliver the wildflower seed separately from the grass seed mix. Package and deliver the Tall Drop Seed separately from the grass seed and the wildflower mix. Place the grass seed (except Tall Drop Seed) in the large seed box and drill (cover) seed ⅛" -¼". Place the wildflower seed in a separate seed box and drill (cover) seed 1/16" maximum. Place the Tall Drop Seed in a separate (third) seed box and place the seed (using the seed drill) on the soil surface.
OPTION: Broadcast Tall Drop Seed on the soil surface.

GRASS & WILDFLOWER SEEDING SEASONS

COOL SEASON GRASSES	WARM SEASON GRASSES & WILDFLOWERS
February 15 thru April 20 August 15 thru September 30	November 15 thru June 1
SPECIES	SPECIES
Bluegrasses	Bermuda Grass
Brome Grasses	Big Bluestem
Canada Wildrye	Blue Grama
Fescues	Buffalo Grass
Prairie Junegrass	Indiangrass
Ryegrasses	Little Bluestem
Sterile Wheatgrass	Sand Bluestem
Tall Dropseed	Sand Dropseed
Western Wheatgrass	Sand Lovegrass
	Side Oats Grama
	Switchgrass
	Wildflower Mixes

When the area to be seeded is 1 acre or more, if Cool Season grasses are mixed with Warm Season grasses, seed the area during the Warm Season.

When the area to be seeded is less than 1 acre, seed the area any time of the year.

SODDING SEASONS

COOL SEASON GRASSES	WARM SEASON GRASSES
March 1 thru April 15 September 1 thru November 15	May 15 thru September 1
SPECIES	SPECIES
Bluegrass Sod	Buffalo Grass Sod
Fescue Sod	

If the soil is workable, the Engineer may allow placement of sod between November 15 and March 1. If sod is placed during this time, maintain the sod until 20 days after the beginning of the spring sodding season.

NO.	DATE	REVISIONS	BY	APP'D
03	09-12-24	Addition of tables for District Seed Mix	M.E.C.	M.L.
02	11-25-20	Updated Seeding / Sodding Periods Charts	M.R.D.	M.L.
01	08-03-20	Revised Standard	M.R.D.	S.H.S.

KANSAS DEPARTMENT OF TRANSPORTATION

PERMANENT SEEDING SUMMARY OF SEEDING QUANTITIES

LA850

FHWA APPROVAL		03-27-25	APP'D.	Mervin Lare
DESIGNED	DETAILED		QUANTITIES	TRACED
DESIGN CK.	DETAIL CK.		QUAN.CK.	TRACE CK.

Plotted by : jdlabal 8-APR-2026 08:41
File : la850.dgn

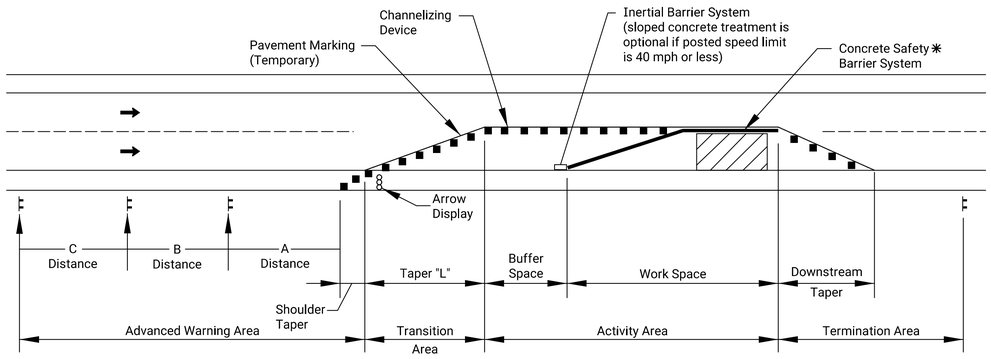

TYPICAL WORK ZONE COMPONENTS

Taper Length (L)

✳✳ Posted speed prior to work starting

Speed✳✳ (MPH)	Width of Offset (ft)												
	1	2	3	4	5	6	7	8	9	10	11	12	13
20	7	13	20	27	33	40	47	53	60	67	73	80	87
25	10	21	31	42	52	63	73	83	94	104	115	125	135
30	15	30	45	60	75	90	105	120	135	150	165	180	195
35	20	41	61	82	102	123	143	163	184	204	225	245	265
40	27	53	80	107	133	160	187	213	240	267	293	320	347
45	45	90	135	180	225	270	315	360	405	450	495	540	585
50	50	100	150	200	250	300	350	400	450	500	550	600	650
55	55	110	165	220	275	330	385	440	495	550	605	660	715
60	60	120	180	240	300	360	420	480	540	600	660	720	780
65	65	130	195	260	325	390	455	520	585	650	715	780	845
70	70	140	210	280	350	420	490	560	630	700	770	840	910
75	75	150	225	300	375	450	525	600	675	750	825	900	975

✳When concrete barrier system is used, portable channelizing devices are not needed along the tangent barrier section.

Taper Formulas:

L = WS for speeds of 45 MPH or more

$L = WS^2/60$ for speeds of 40 MPH or less

Where: L = Minimum length of taper in feet
S = Numerical value of posted speed prior to work starting in MPH
W = Width in offset feet

Shifting Taper=1/2 L
Shoulder Taper=1/3 L

A distance of at least 2L should separate merging and shifting tapers

Advance Warning Sign Spacing

✳✳ Posted speed prior to work starting

SPEED (MPH)✳✳	A	B	C
URBAN (40MPH OR LOWER)	100	100	100
URBAN (45 MPH OR HIGHER)	350	350	350
RURAL (55 MPH OR LOWER)	500	500	500
RURAL (60 MPH OR HIGHER)	750	750	750
EXPRESSWAY/FREEWAY	1000	1500	2640

Minimum advance warning sign spacing (in feet)

The minimum spacing between signs shall be no less than 100', unless directed by the engineer.

The spacing between any signs may be increased beyond the minimum values in the table above as approved by the engineer in order to maximize visibility.

Channelizer Placement:

(1) The spacing between devices in transition area (taper) should not exceed a distance in feet equal to 1/2 the posted speed limit in mph prior to work starting.

(2) The spacing between devices in the advanced warning area and the activity area should not exceed a distance in feet equal to two times the posted speed limit in mph prior to work starting.

(3) Channelizing devices shall be placed for optimum visibility, normally at right angles to the traffic flow.

(4) Place directional indicator barricades in series to direct traffic onto the new path. The arrow sign should not be visible to opposing traffic.

(5) Alternating diagonal orange and white striping must slope downward in the direction traffic is expected to pass.

Buffer Spacing

✳✳ Posted speed prior to work starting

SPEED (MPH) ✳✳	*20*	*25*	*30*	*35*	*40*	*45*	*50*	*55*	*60*	*65*	*70*	*75*
LENGTH (ft)	*115*	*155*	*200*	*250*	*305*	*360*	*425*	*495*	*570*	*645*	*730*	*820*

Neither work activity nor storage of equipment, vehicles, or material should occur in the buffer space. When a protection vehicle is placed in advance of the work space, only the space upstream of the vehicle constitutes the buffer space.

If temporary concrete safety barrier system is used to separate approaching traffic from the work space, the barrier system shall be considered part of the activity area. A full lane width should be available throughout the length of the buffer space. See typical work zone components above.

1) Design Speed: Those items delegated to temporary traffic control should be designed and installed using the posted/legal speed of the roadway prior to work starting.

2) Minimum Lane Width: Lane widths shall be a minimum of 11', measured between centerlines of pavement markings (centerline, edge line and lane line) or as directed by the engineer. A lane width less than 10' should be closed according to the currently adopted MUTCD. Lane widths that fall between 11' and 10' should include restricted roadway signing (W5-1, W5-2, W5-4)

3) TTC plans should include bicyclists and pedestrians, including those with disabilities, and should be provided with accesses and passage through the TTC
zone.

3a) Adequate warning, delineation, and channelization should be provided to assist in guiding road users in advance of and through the TTC zone with information in a usable format for pedestrians with vision disabilities. Provisions for effective continuity of accessible circulation paths for pedestrians should be incorporated into the TTC plan.

3b) When existing pedestrian facilities including transit are disrupted, closed, or relocated in a TTC zone, the temporary facilities shall be detectable and include accessibility features consistent with the features present in the existing pedestrian facility. A pedestrian channelizing device that is detectable by a person with a vision disability traveling with the aid of a long cane shall be placed across the full width of the closed pedestrian facility. Pedestrian and bicycles are not allowed on Interstate.

3c) SIDEWALK CLOSED CROSS HERE signs shall include audible information devices to provide adequate communication to pedestrians with vision disabilities.

4) When the driving surface open to traffic is milled, or is a temporary surface made of loose material, or when directed by the engineer, a W8-15 (Grooved Pavement) or W8-7 (Loose Gravel) sign shall be used on mainline approaches. This sign should be placed a "C" distance after the W20-1 (Road Work Ahead) sign. A W8-15p motorcycle plaque shall be used to supplement the W8-15 or W8-7 signs. All signs shall be displayed as long as the condition is present.

5) Alternative temporary rumble strip options may be available. Please contact the Temporary Traffic Control Unit for more information at 785-296-3618

6) When detour routes impact railroad grade crossings, verify that there is no potential to cause queuing, if so, install "DO NOT STOP ON TRACKS" (R8-8).

7) When Temporary Traffic Control plans impact a railroad grade crossing, a temporary traffic signal will need to be approved by KDOT Traffic engineering and the affected railroad company.

8) Temporary traffic control signs shall not restrict the motorist visibility to railroad devices.

STATE	PROJECT NO.	YEAR	SHEET NO.	TOTAL SHEETS
KANSAS	073 C-5357-01	2026	28	36

NO.	DATE	REVISIONS	BY	APP'D

KANSAS DEPARTMENT OF TRANSPORTATION

TRAFFIC CONTROL GENERAL NOTES

TE700

FHWA APPROVAL	12-05-25	APP'D.	Nick Rogers
DESIGNED B.A.H.	DETAILED R.W.B.	QUANTITIES	TRACED
DESIGN CK.	DETAIL CK.	QUAN.CK.	TRACE CK.

Plotted by : jdlabal 8-APR-2026 08:42
File : te700.dgn

STATE	PROJECT NO.	YEAR	SHEET NO.	TOTAL SHEETS
KANSAS	073 C-5357-01	2026	29	36

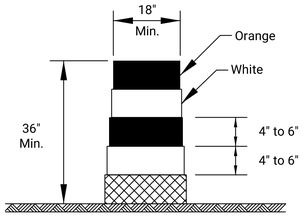

DRUM

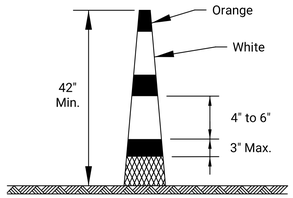

CONICAL DELINEATOR

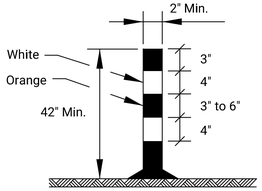

TUBULAR MARKER

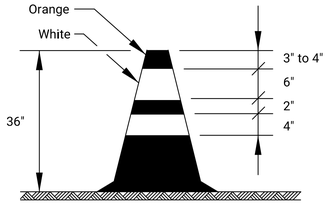

TRAFFIC CONE

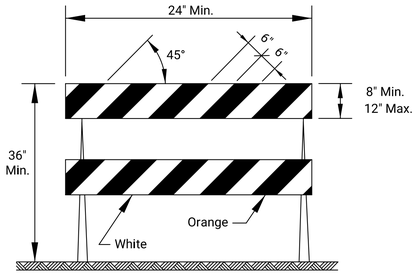

TYPE 2 BARRICADE

For rails less than 36" long, 4" wide stripes may be used. All stripes shall slope downward to the traffic side for channelization.

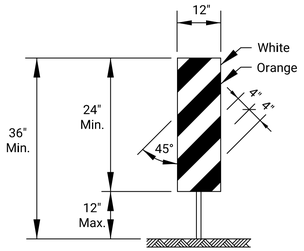

VERTICAL PANEL

The stripes shall slope downward to the traffic side for channelization.

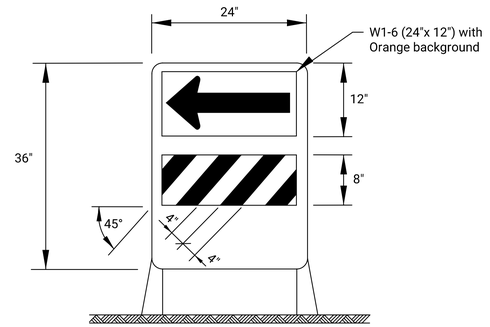

DIRECTION INDICATOR BARRICADE

The stripes shall slope downward in the direction traffic is to pass. The direction indicator barricade shall be used in series to direct the motorist into the intended lane of travel.

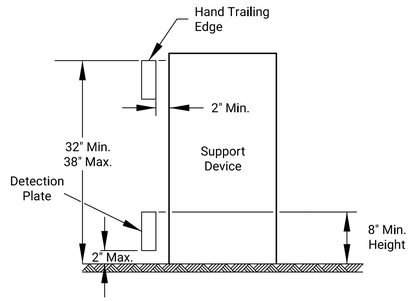

PEDESTRIAN CHANNELIZER

1. Support device shall not project beyond the detection plate into the pathway.
2. Hand trailing edges and detection plates are optional for continuous walls.
3. Interconnect pedestrian channelizers to prevent displacement and to provide continuous guidance through or around work.
4. Alternate pathways shall be firm, stable, and slip resistant.
5. Treat height differentials > 1/2" in the surfaces of alternate paths with a firm, stable, and slip resistant temporary ramp having a slope of 12:1 or flatter and having a width equal to the alternate path.
6. Use alternating orange/white on interconnected devices.

Item	Location	Cross-overs	Shoofly Diversions	Tangents	Tapers	Ramps	Head to Head	Object Identifier	Lead-in Devices	Gores
Portable										
	Drums	Yes	Yes	Yes	Yes	Yes	(1)	Yes	Yes	Yes
	Conical Delineators	Yes	Yes	Yes	Yes	Yes	(1)	Yes	Yes	Yes
	Vertical Panels	Yes	Yes	Yes	Yes	Yes	(1)	Yes	Yes	Yes
	Direction Indicator Barricade	No	No	No	Yes	No	No	No	No	No
	Type 2 Barricade	Yes	Yes	Yes	Yes	No	No	Yes	No	No
	Traffic Cones	No	No	(3)	(3)	(3)	No	(3)	(3)	(3)
Fixed										
	Tubular Markers	(2)	(2)	(2)	No	(2)	Yes	No	Yes	Yes
	Vertical Panels	(2)	(2)	(2)	(2)	(2)	(2)	Yes	(2)	Yes

(1) Not allowed on centerline delineation along freeways or expressways.
(2) May be used upon the approval of the engineer.
(3) Daytime operations only.

NO.	DATE	REVISIONS	BY	APP'D

KANSAS DEPARTMENT OF TRANSPORTATION

TRAFFIC CONTROL CHANNELIZING DEVICES

TE702

FHWA APPROVAL		12-05-25	APP'D.	Nick Rogers	
DESIGNED	L.E.R.	DETAILED R.W.B.	QUANTITIES	TRACED	
DESIGN CK.		DETAIL CK.	QUAN.CK.	TRACE CK.	

Plotted by : jdlabal 8-APR-2026 08:42
File : te702.dgn

STATE	PROJECT NO.	YEAR	SHEET NO.	TOTAL SHEETS
KANSAS	073 C-5357-01	2026	30	36

SIGN LAYOUT INFORMATION



KG20-2

Std. Size Expwy/Freeway
6" C
48"x 24"



KG20-5

Std. Size Expwy/Freeway
6" C
48"x 24"



KM4-2OP

Std. Size
3" C
24"x 6"

Expwy/Freeway
6" C
48"x 12"



KW21-25

Std. Size Expwy/Freeway
7" C
48"x 48"



KW21-26

Std. Size Expwy/Freeway
6" C
48"x 48"



KR2-6

Std. Size Expwy/Freeway
8" D
48"x 36"



KR2-11

Std. Size Expwy/Freeway
6" C
24"x 48"

KR2-11 sign shall be used whenever KR2-6 sign is used in a Work Zone.



KE5-25P

Std. Size Expwy/Freeway
12" D
96" x 30"



SP-01
(Special Sign)

Std. Size
6" C
18" Shield

Expwy/Freeway
10" D
36" Shield

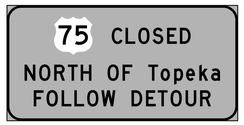

SP-02
(Special Sign)

Std. Size
Uppercase: 6" C
Lowercase: 4.5" C
18" Shield

Expwy/Freeway
Uppercase: 10" D
Lowercase: 8" D
36" Shield

All city names and street names on special signs and destination signs must have upper and lower case letters.

Routes need to be shown using the correct Shield on all Special signs.

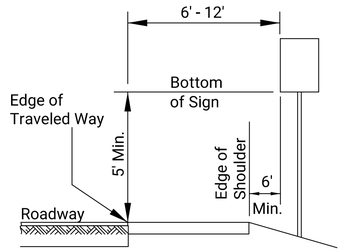

RURAL

1) Ground-mounted signs shall be mounted at a minimum height of 5' measured from the bottom of sign to the near edge of the pavement.

2) Large signs having an area exceeding 50 square feet installed on multiple breakaway posts shall be mounted a minimum of 7' above the ground.

3) The height of the secondary sign mounted below another sign may be 4' measured from the bottom of the sign to the near edge of the pavement. Signs shall not overlap each other.

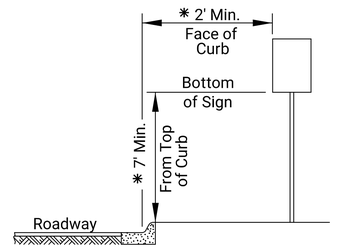

URBAN

1) Signs shall be mounted at a minimum height of 7' measured from the bottom of sign to the near edge of the pavement.

2) Neither portable nor permanent sign supports shall be located on sidewalks or areas designated for pedestrian or bicycle traffic.

3) Signs mounted lower than 7' should not project more than 4" into pedestrian facilities.

4) The height of the secondary sign mounted below another sign may be 6' measured from the bottom of sign to the near edge of the pavement. Signs shall not overlap each other.

5) Large signs having an area exceeding 50 square feet installed on multiple breakaway posts shall be mounted a minimum of 7' above the ground.

* 6) Pedestrian detour signing shall be a minimum of 2' measured from the top of the pedestrian pathway to the bottom of the sign and shall not protrude into the walkway nor shall it project beyond the back of curb.

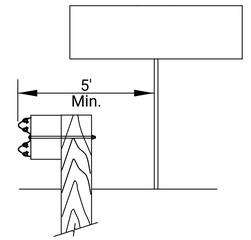

1) The edge of the sign is not to extend beyond the back side of the guard rail. The sign post shall not be located within 5' of the guard rail.

2) The mounting height for signs behind the guard rail shall be the same as the mounting height for shoulder mounted signs.

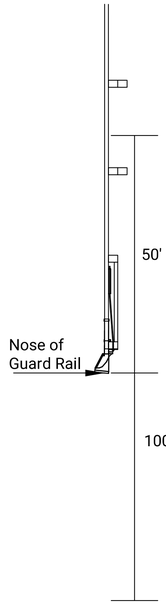

NO SIGN PLACEMENT AREA

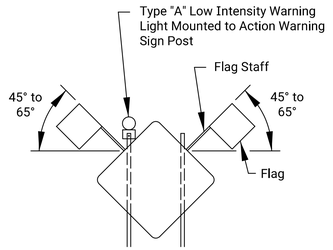

In the case of hitting rock when driving posts
1. Shift the sign location. Do not violate minimum sign spacing.
2. With the engineer's approval, use acceptable alternative sign stands.

NO.	DATE	REVISIONS	BY	APP'D

KANSAS DEPARTMENT OF TRANSPORTATION

TRAFFIC CONTROL SIGN INFORMATION

TE710

FHWA APPROVAL		12-05-25	APP'D.	Nick Rogers	
DESIGNED	R.W.B.	DETAILED R.W.B.	QUANTITIES	TRACED	
DESIGN CK.		DETAIL CK.	QUAN.CK.	TRACE CK.	

Plotted by : jdlabal 8-APR-2026 08:42
File : te710.dgn

STATE	PROJECT NO.	YEAR	SHEET NO.	TOTAL SHEETS
KANSAS	073 C-5357-01	2026	31	36

PERFORATED SQUARE STEEL TUBE (P.S.S.T.) POST SETUP

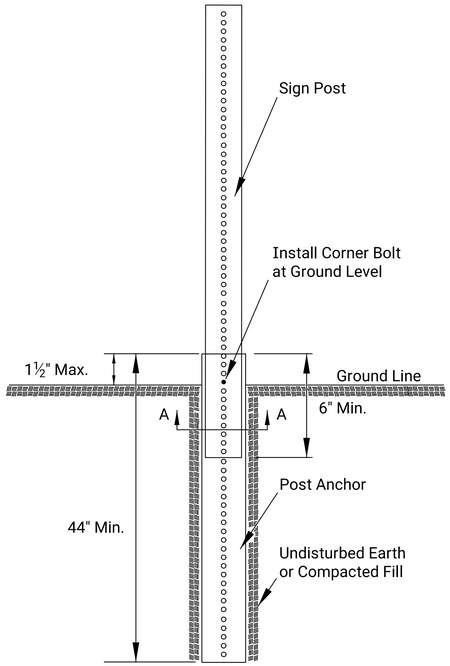

P.S.S.T. Detail

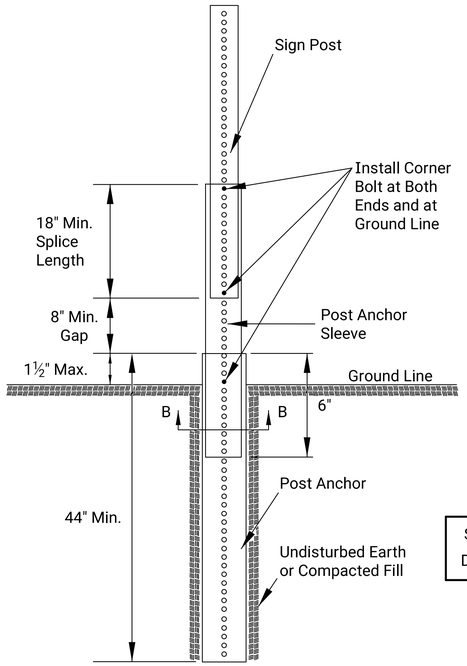

Telescoping P.S.S.T. Detail

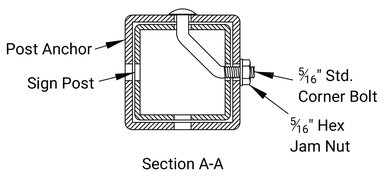

Section A-A

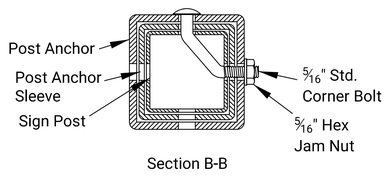

Section B-B

Details for 2", 2 ¼", or 2 ½" sign posts

Place bolts in the same corner along each sign post.

WOOD POST SETUP

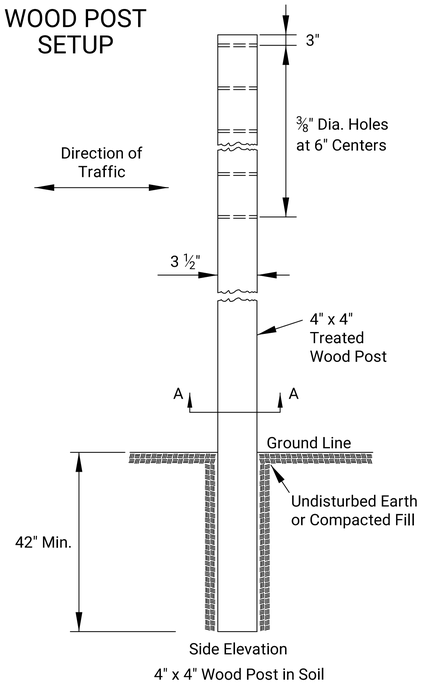

Side Elevation
4" x 4" Wood Post in Soil

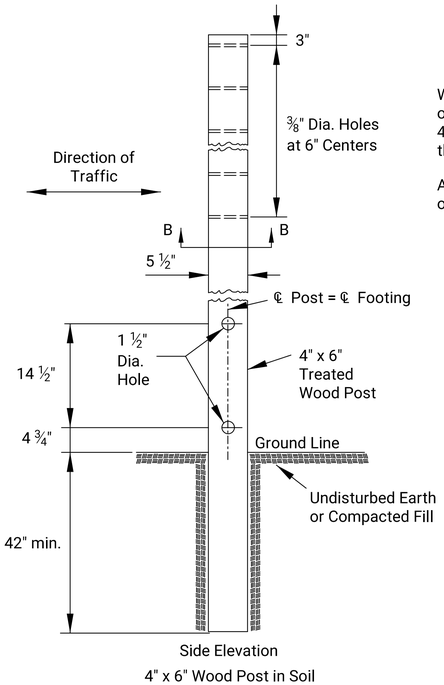

Side Elevation
4" x 6" Wood Post in Soil

When the sign width is equal to or greater than 9', three or more wood posts should be used with a minimum of 4' between the centerline of each post. All signs less than 9' in width shall use a maximum of two wood posts.

All Special signs larger than 16 sq. ft. shall be installed on wood posts.

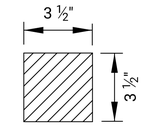

Section A-A

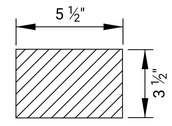

Section B-B

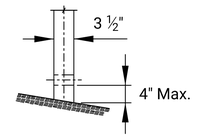

Front Elevation

See TE710 for Additional Details and Requirements

3 LB/F U-CHANNEL SETUP

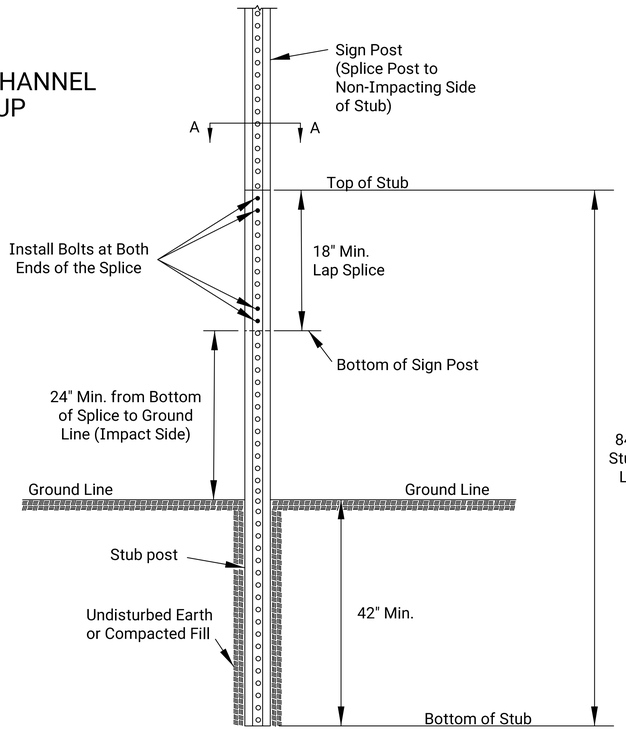

Notes:

Place two bolts at both ends of the splice through the holes nearest the ends of the splice.

Use manufacturer recommended spacers over the bolts between the spliced pieces of U-Channel.

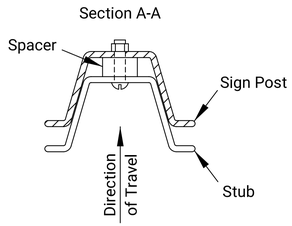

NO.	DATE	REVISIONS	BY	APP'D

KANSAS DEPARTMENT OF TRANSPORTATION

TRAFFIC CONTROL SIGN POSTS

TE712

FHWA APPROVAL			12-05-25	APP'D.		Nick Rogers	
DESIGNED	B.A.H.	DETAILED	R.W.B.	QUANTITIES		TRACED	
DESIGN CK.		DETAIL CK.		QUAN.CK.		TRACE CK.	

Plotted by: jdlabal 8-APR-2026 08:42
File : te712.dgn

STATE	PROJECT NO.	YEAR	SHEET NO.	TOTAL SHEETS
KANSAS	073 C-5357-01	2026	32	36

SUMMARY OF TRAFFIC CONTROL DEVICES -FOR INFORMATION ONLY-

All traffic control devices shall be placed in accordance with the applicable KDOT Traffic Control Standards. The Contractor shall provide all signs and other traffic control devices for proper traffic control of all construction activities. Quantities listed are an estimate only. Contractor operations may require additional signs and traffic control devices, this will be subsidiary to the bid item "Traffic Control".

Pavement Marking (Temporary) Symbols					
Location	Type	Symbol	Phase	Direction	Qty.

SUMMARY OF TRAFFIC CONTROL DEVICES (EACH)

Work Zone Sign (Special)		
Sign No.	16.25 Sq.Ft. & Less	16.26 Sq.Ft. & Over

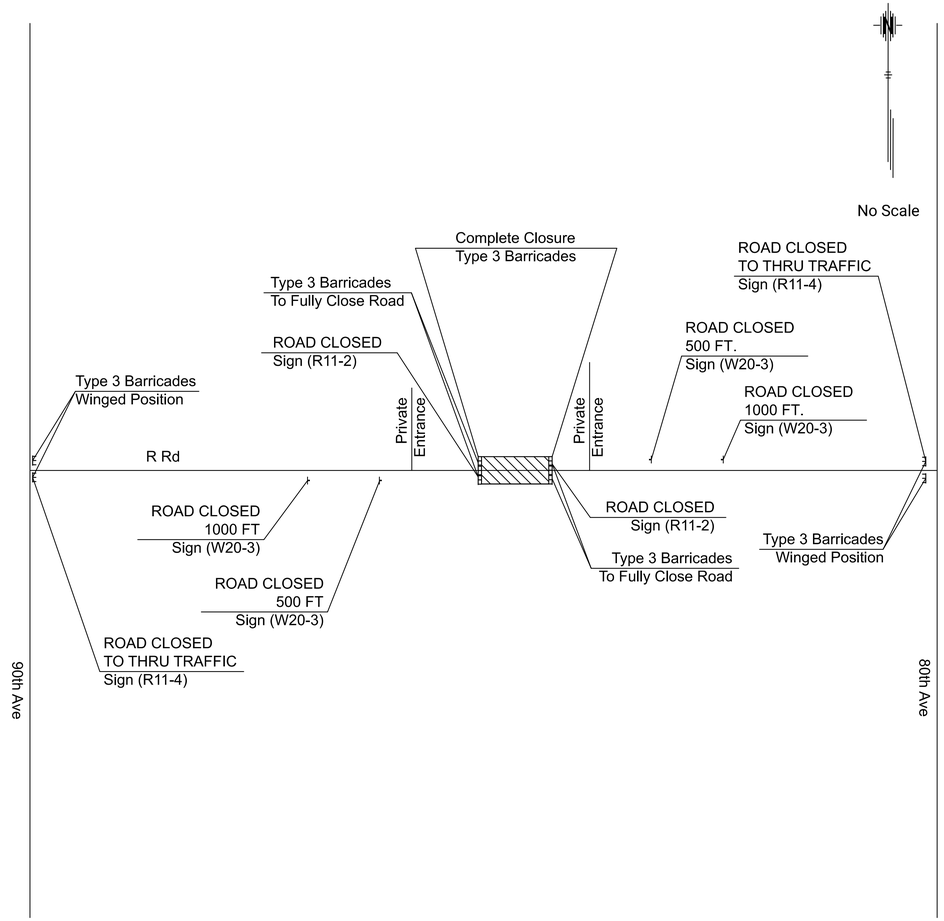

SUMMARY OF TRAFFIC CONTROL DEVICES (EACH PER DAY)

✳ Quantity most used on the project at any one time

Work Zone Signs ✳			
Sign No.	Size - Sq.Ft.		
	0-9.25	9.26-16.25	16.26 & Over
R11-2		2	
R11-4		2	
W20-7		2	
W20-3		4	

Barricades ✳		Channelizing Devices ✳		
Type 3 (4' to 12')	Pedestrian	Fixed	Portable	Pedestrian
10				

Lighted Devices ✳	
Work Zone Warning Light (Type "A" Low Intensity)	8
Work Zone Warning Light (Red Type "B" High Intensity)	
Arrow Display	
Portable Changeable Message Sign	

Recapitulation of Quantities		
Item	Quantity	Unit
Work Zone Signs (0 to 9.25 Sq.Ft.)		Each Per Day
Work Zone Signs (9.26 to 16.25 Sq.Ft.)		Each Per Day
Work Zone Signs (16.26 Sq.Ft. & Over)		Each Per Day
Work Zone Barricades (Type 3 - 4' to 12')		Each Per Day
Work Zone Barricades (Pedestrian)		Each Per Day
Channelizer (Fixed)		Each Per Day
Channelizer (Portable)		Each Per Day
Channelizer (Pedestrian)		Each Per Day
Work Zone Warning Light (Type "A" Low Intensity)		Each Per Day
Work Zone Warning Light (Red Type "B" High Intensity)		Each Per Day
Arrow Display		Each Per Day
Portable Changeable Message Sign		Each Per Day
Pavement Marking (Temporary)		
4" Solid (Type I)		Sta./Line
4" Solid (Type II)		Sta./Line
4" Broken (8.0') (Type I)		Sta./Line
4" Broken (8.0') (Type II)		Sta./Line
4" Broken (3.0') (Type I)		Sta./Line
4" Broken (3.0') (Type II)		Sta./Line
4" Dotted Extension (Type I)		Sta./Line
4" Dotted Extension (Type II)		Sta./Line
Symbol (Type I)		Each
Symbol (Type II)		Each
Flexible Raised Pavement Marker (4" Broken (8.0'))		Sta./Line
Flexible Raised Pavement Marker (4" Broken (3.0'))		Sta./Line
Pavement Marking Removal		Lin. Ft.
Work Zone Sign (Special) (16.25 Sq. Ft. & Less)		Each
Work Zone Sign (Special) (16.26 Sq. Ft. & More)		Each
Rigid Raised Pavement Marker (Type I)		Each
Rigid Raised Pavement Marker (Type II)		Each
Traffic Signal Installation (Temporary)		Lump Sum
Traffic Control (Initial Set Up)		Lump Sum
Traffic Control	Lump Sum	Lump Sum
Flagger (Set Price)	1	Hour

NO.	DATE	REVISIONS	BY	APP'D

KANSAS DEPARTMENT OF TRANSPORTATION

TRAFFIC CONTROL SUMMARY OF DEVICES RECAPITULATION OF QUANTITIES

TE795

FHWA APPROVAL	12-05-25	APP'D.	Nick Rogers
DESIGNED B.A.H.	DETAILED R.W.B.	QUANTITIES	TRACED
DESIGN CK.	DETAIL CK.	QUAN.CK.	TRACE CK.

Plotted by: jdlabal 8-APR-2026 08:42
File : te795.dgn

STATE	PROJECT NO.	YEAR	SHEET NO.	TOTAL SHEETS
KANSAS	073 C-5357-01	2026	33	36

DATE	BY	
		REFERENCES NOTED
		REFERENCES CHECKED

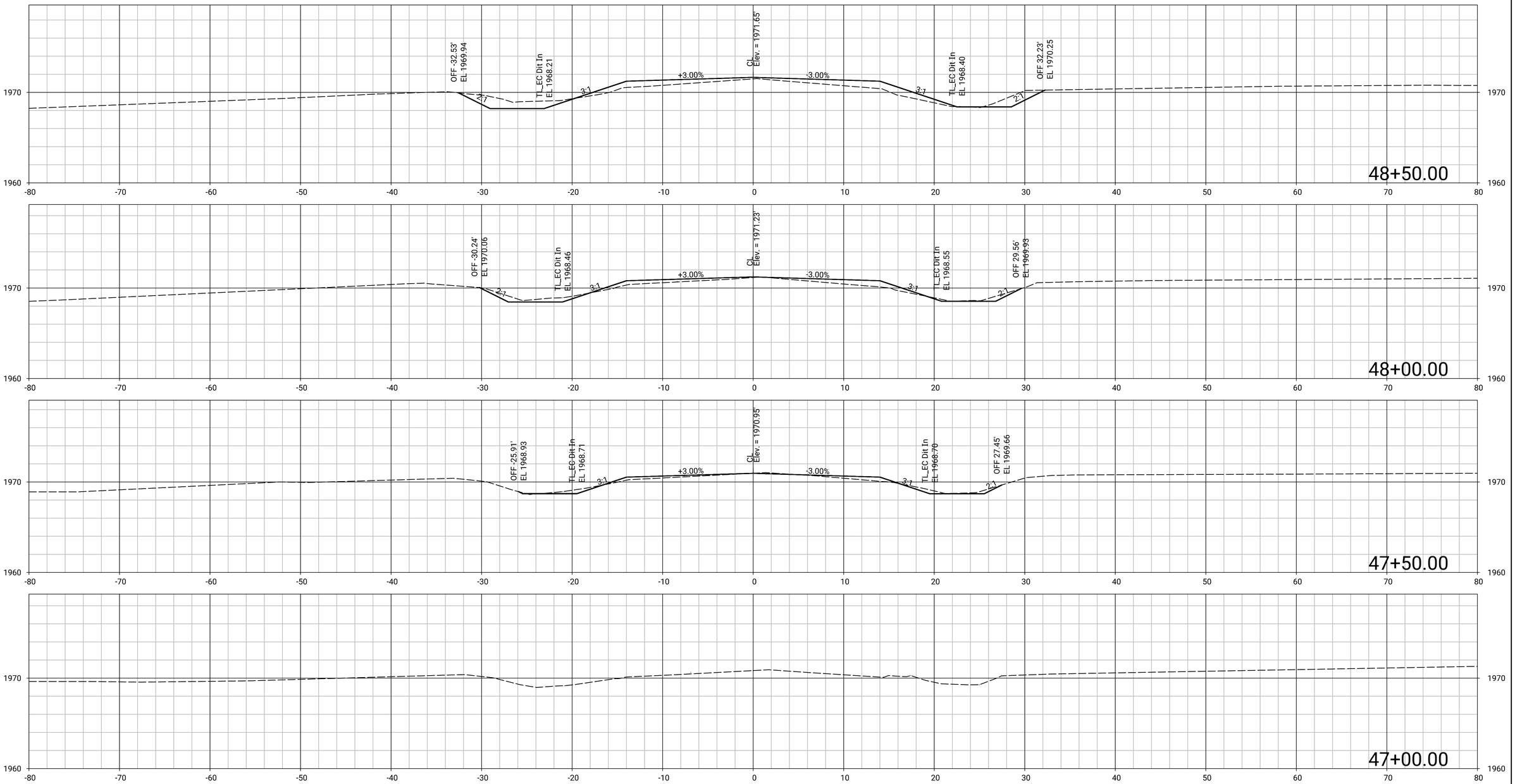

Plotted by : jdlabal 8-APR-2026 08:42
File : 2410800_rxs_01.dgn

STATE	PROJECT NO.	YEAR	SHEET NO.	TOTAL SHEETS
KANSAS	073 C-5357-01	2026	34	36

DATE	BY	REFERENCES NOTED	REFERENCES CHECKED

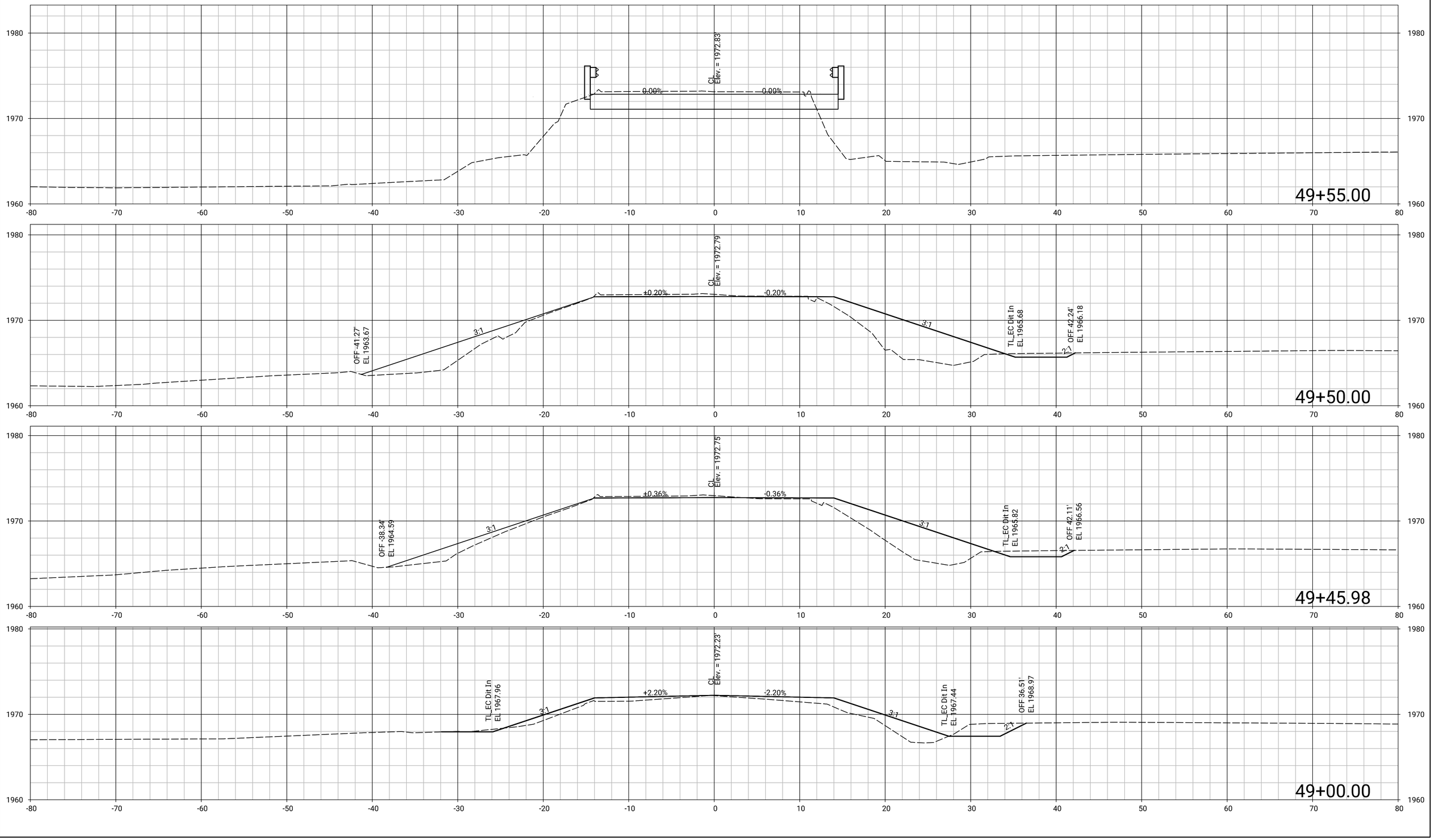

Plotted by : jdlabal 8-APR-2026 08:43
File : 2410800_rxs_01.dgn

STATE	PROJECT NO.	YEAR	SHEET NO.	TOTAL SHEETS
KANSAS	073 C-5357-01	2026	35	36

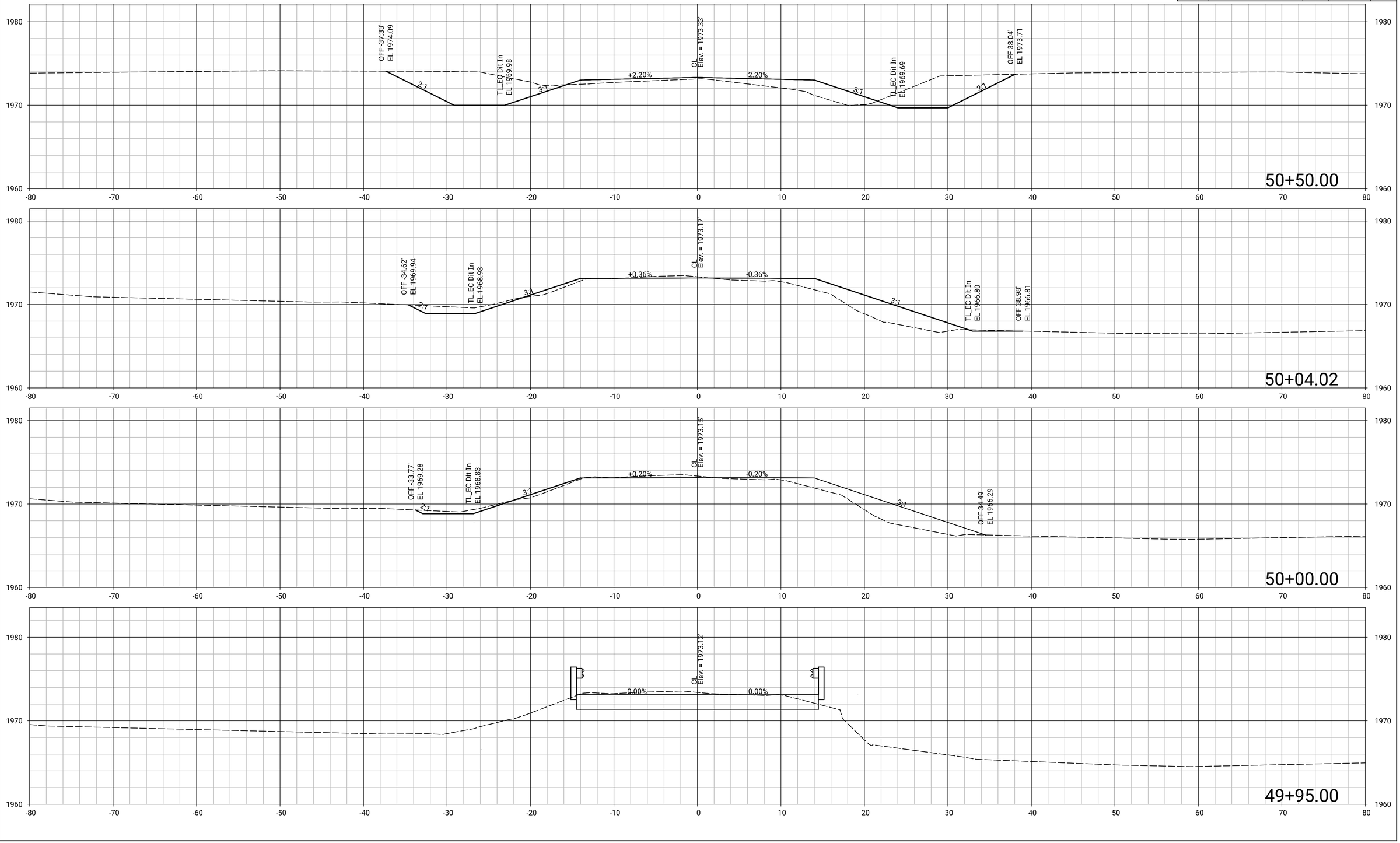

DATE	BY	
		REFERENCES NOTED
		REFERENCES CHECKED

Plotted by : jdlabal 8-APR-2026 08:43
File : 2410800_rxs_01.dgn

STATE	PROJECT NO.	YEAR	SHEET NO.	TOTAL SHEETS
KANSAS	073 C-5357-01	2026	36	36

DATE	BY	
REFERENCES NOTED		
REFERENCES CHECKED		

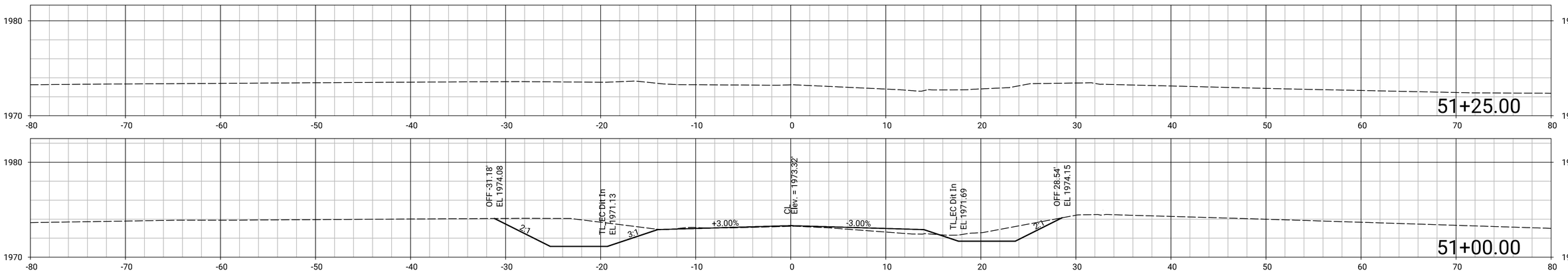

Plotted by : jdlabal 8-APR-2026 08:43
File : 2410800_rxs_01.dgn