- SOUTH SARPY EXPRESSWAY -

- NOTES -

GENERAL
This structure is designed in accordance with the AASHTO LRFD Bridge Design Specifications, 9th Edition, including subsequent interim revisions.

The Contractor may substitute any one of the alternate designs shown on the plans for the original design. All quantities are based on the original design and no additions or deductions will be allowed for the use of an alternate design.

The concrete bridge deck is designed by the empirical design method.

The superstructure and substructure are designed for a future wearing surface of three inches of asphalt, 35 psf.

The superstructure is designed for the allowance of stay-in-place forms (5 psf) between girders.

All dimensions shown are in horizontal plane only. No allowances have been made for vertical curve or roadway cross slope.

Unless noted "NOT TO SCALE", all details are drawn using a constant scale in accordance with NDOT Bridge Scaling Policy.

Girder shims that will be provided to the Contractor account for the dead load deflection due to weight of the slab, rail/barrier, wearing surface (if present), and median (if present) only. The Contractor is responsible for making the necessary adjustments for the specific forming system used to achieve the slab grades and elevations shown on the plans.

The shim shots may be taken before or after the turndowns and diaphragms are poured.

The finishing machine shall be supported by the girders of the phase that is being poured. When closure pours are required, the bridge finishing machine shall be supported on the completed Phase I and Phase II slabs.

SUBSTRUCTURE
Structural steel for all "H" piles shall conform to ASTM A709, Grade 50.

All other structural steel shall conform to the requirements of ASTM A709, Grade 36.

The Pay Item, "STRUCTURAL STEEL FOR SUBSTRUCTURE", shall include any of the following applicable items: tie rods and turnbuckles.

Tie Rods shall conform to ASTM A709, Grade 36 steel. Turnbuckles shall conform to ASTM A668, Class C.

After fabrication, all structural steel for substructure shall be galvanized according to ASTM A123.

CONCRETE & REINFORCEMENT
Concrete for slab, approach slabs, diaphragms, turndowns, and rails/barriers shall be Class "47BD", with a 28-day strength of 4,000 psi.

All other cast-in-place concrete shall be Class "47B" concrete, with a 28-day strength of 3,000 psi.

Chamfer all exposed edges of concrete.

Unless noted as "Optional", all construction joints shown are mandatory.

All reinforcing steel shall be epoxy coated and conform to the requirements of ASTM A615, Grade 60 steel.

The minimum clearance, measured from the face of the concrete to the surface of any reinforcing bar, shall be 3" for substructure elements and 2" for superstructure elements, except where otherwise noted.

Field bend and/or clip reinforcing bars to maintain minimum clearance. Epoxy coat clipped ends.

PRESTRESSED GIRDERS
The prestressed girders have been designed assuming 100% continuity at the interior supports for live load.

Prestressed concrete girders must be at least 9 days old before they can be set on the Bridge substructure.

Surveying for shim shots, forming the bridge deck, turndowns, diaphragms, and placing construction material on the girders is not allowed until the girders have reached design strength and are at least 30 days old.

All girder lines and spans, between expansion joints, shall be set before the shims are calculated.

Shim shots are valid for 60 days. If the deck is not placed within 60 days, shim shots must be retaken, shims may be adjusted, and all costs shall be subsidiary to the Pay Item "CLASS 47BD-4000 CONCRETE FOR BRIDGE".

The Contractor must provide any temporary intermediate diaphragms and/or bracing necessary to provide lateral and torsional stability for the girders during construction of the concrete slab.

The temporary intermediate diaphragms/bracing shall be removed after the concrete slab has attained 75% of its design strength. The cost for furnishing, installing, and removing the temporary intermediate diaphragms and/or bracing shall be subsidiary to the Pay Item, "CLASS 47BD-4000 CONCRETE FOR BRIDGE".

MISCELLANEOUS
All materials, equipment, tools, labor, and incidentals necessary to complete the work, not paid for directly, shall be considered subsidiary to other items for which payment is made.

See Roadway Plans and Special Provisions for details and information regarding optional Contractor's Access Bridge or Access Crossing.

Deck surface treatment shall be applied after bridge deck grooving is complete.

- QUANTITIES -

ABUTMENT NO. 1 EXCAVATION		-- LS
PIER NO. 1 EXCAVATION		-- LS
PIER NO. 2 EXCAVATION		-- LS
ABUTMENT NO. 2 EXCAVATION		-- LS
CLASS 47B-3000 CONCRETE FOR BRIDGE		-- CY
ABUTMENTS	-- CY	
PIERS	-- CY	
CLASS 47BD-4000 CONCRETE FOR BRIDGE		-- CY
SLAB	-- CY	
HAUNCHES	-- CY	
CONCRETE RAILS	-- CY	
EPOXY COATED REINFORCING STEEL		-- LB
SLAB	-- LB	
CONCRETE RAILS	-- LB	
ABUTMENTS	-- LB	
PIERS	-- LB	
PRECAST/PRESTRESSED CONCRETE SUPERSTRUCTURE AT STATION 11549+94.00		-- LS
GIRDERS	-- CY	
STRUCTURAL STEEL FOR SUBSTRUCTURE		-- LB
TEST PILE		-- EA
HP 12 INCH X 53 LB STEEL PILING		-- LF
HP 14 INCH X 89 LB STEEL PILING		-- LF
GRANULAR BACKFILL		-- CY
SUBSURFACE DRAINAGE MATTING		-- SY
EXPANSION BEARING, PTFE TYPE		-- EA
FIXED BEARING		-- EA
CONCRETE FOR PAVEMENT APPROACHES CLASS 47BD-4000		-- CY
SLABS	-- CY	
CONCRETE RAILS	-- CY	
EPOXY COATED REINFORCING STEEL FOR PAVEMENT APPROACHES		-- LB
SLABS	-- LB	
CONCRETE RAILS	-- LB	
PREFORMED EXPANSION JOINT, TYPE A		-- LF
FLOOR DRAINS		-- EA
BRIDGE DECK GROOVING		-- SY
2" CONDUIT IN BRIDGE		-- LF
DECK SURFACE TREATMENT		-- SF
FURNISHING RESIN FOR FLOOD COAT		-- GAL

- INDEX -

GENERAL NOTES, QUANTITIES & INDEX	1
GENERAL PLAN & ELEVATION	2
COORDINATE LAYOUT	3
COORDINATE DATA	4
GEOLOGICAL PROFILE	5
PILE LAYOUT	6
PLAN & ELEVATION OF ABUTMENT NO. 1	7
PLAN & ELEVATION OF ABUTMENT NO. 2	8
ABUTMENT DETAILS (1 OF 2)	9
ABUTMENT DETAILS (2 OF 2)	10
ABUTMENT DETAILS & BILL OF BARS	11
PLAN & ELEVATION OF PIER	12
PIER DETAILS	13
PIER DETAILS & BILL OF BARS	14
GIRDER LAYOUT	15
NU 1800 GIRDER DETAILS	16
GIRDER & BEARING DETAILS	17
TYPICAL SECTION	18
SLAB REINFORCING LAYOUT	19
ABUTMENT TURNDOWN DETAILS	20
PIER DIAPHRAGM DETAILS	21
SLAB DETAILS & BILL OF BARS	22
FLOOR DRAIN DETAILS	23
CONDUIT DETAILS	24
APPROACH SLAB DETAILS (1 OF 4)	25
APPROACH SLAB DETAILS (2 OF 4)	26
APPROACH SLAB DETAILS (3 OF 4)	27
APPROACH SLAB DETAILS (4 OF 4)	28
CONCRETE RAIL ON BRIDGE	29
CONCRETE RAIL ON APPROACH SLAB	30
BILL OF BARS & BENDING DIAGRAMS	31

SHOP PLANS FOR REVIEW:
- Prestressed Concrete Superstructure
- Substructure Steel (Tie Rods)
- Bearing Devices
- Floor Drains

SHOP PLANS FOR RECORD:
- Stay-in-Place Forms

PRELIMINARY PLAN
NOT FINAL - SUBJECT TO CHANGE

HDR Engineering Inc.
1917 South 67th Street
Omaha, NE 68106
Office: 402-399-1000
Nebraska C.O.A. CA-0443

S1

PROJECT NUMBER
C-77 (25-15)

C.N.

LOCATION
SOUTH SARPY EXPRESSWAY

STRUCTURE NUMBER

360'-0" 3-SPAN PRESTRESSED CONCRETE GIRDER BRIDGE (NU1800)

GENERAL NOTES, QUANTITIES & INDEX

Q.C. ENGINEER: M. Wagner-Loos DATE MARCH 2026

SKEW Varies
ROADWAY 40'-0" WB/40'-0" EB
FHWA CONST. TYPE X081
DESIGN LIVE LOAD HL-93
DESIGN CODE LRFD 9th Edition

COUNTY SARPY
HWY. NO. ---
REF. POST. ---
STA. 11549+94.00

DESIGNED BY: R. Paradis
DETAILED BY: T. Sas

SPECIAL PLAN NO. 1

1 / 31

Computer: 2M05130W92
Date: 13-FEB-2026 15:23
File: NDOT_2D_SP1.dgn

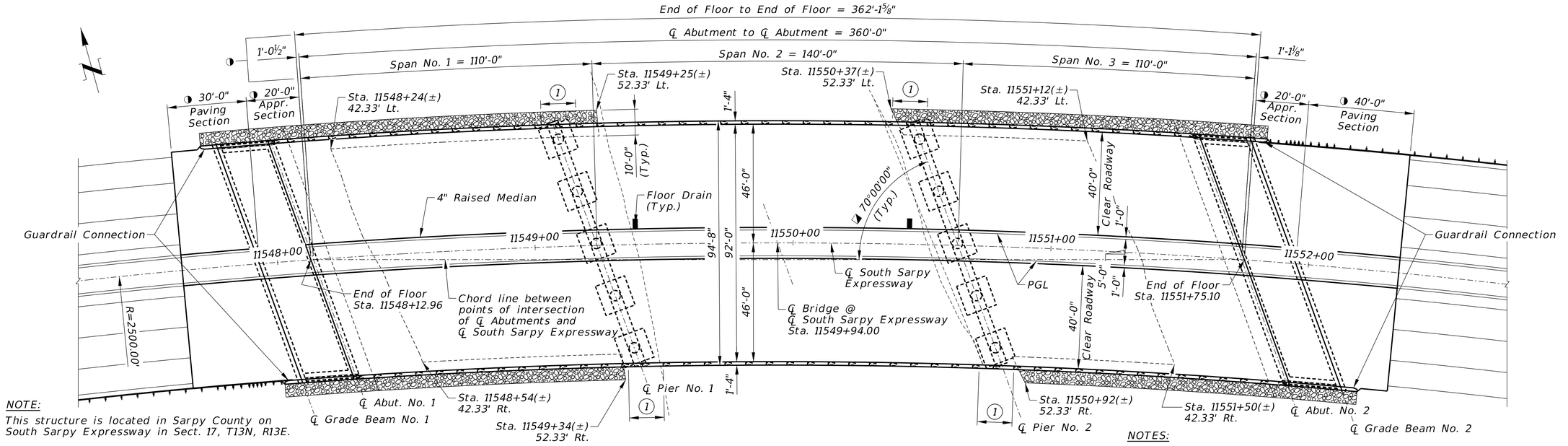

NOTE:
This structure is located in Sarpy County on South Sarpy Expressway in Sect. 17, T13N, R13E.

GENERAL PLAN

NOTES:
Grade elevations shown are at Profile Grade Line (PGL) along ℄ South Sarpy Expressway. Stations shown are at ℄ South Sarpy Expressway.

◪ Measured to chord line. All ℄'s of piers, abutments and grade beams are parallel.

* Measured perpendicular to ℄ Abutment.

◑ Measured along ℄ South Sarpy Expressway.

(1) Limits of Pier Protection Curb, see Sheet 29.

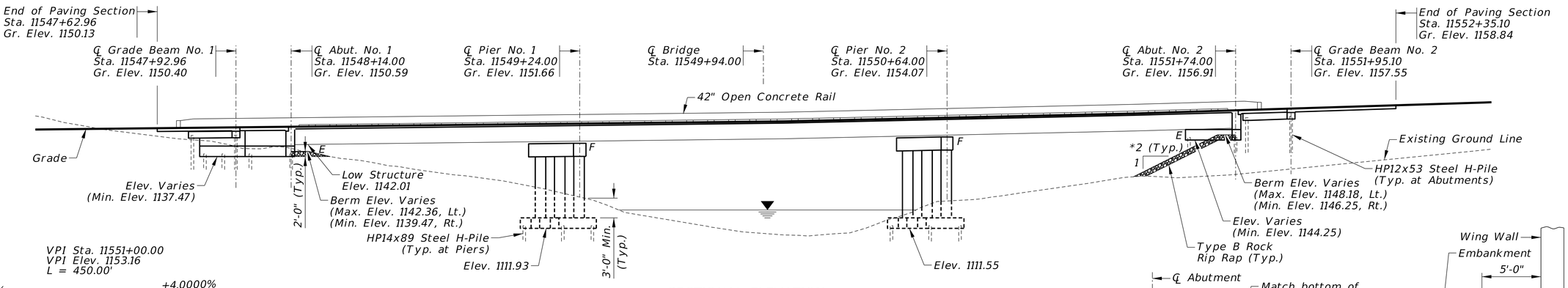

SECTIONAL ELEVATION
(Shown Along ℄ South Sarpy Expressway)

VPI Sta. 11551+00.00
VPI Elev. 1153.16
L = 450.00'

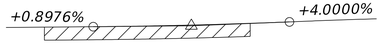

PROFILE GRADE
Not to Scale

HORIZONTAL ALIGNMENT
(SOUTH SARPY EXPRESSWAY)

P.I. Sta. 11548+12.42
△ = 28°47'26" Right
T = 641.67'
L = 1256.22'
R = 2500.00'
P.C. Sta. 11541+70.74
P.T. Sta. 11554+26.97

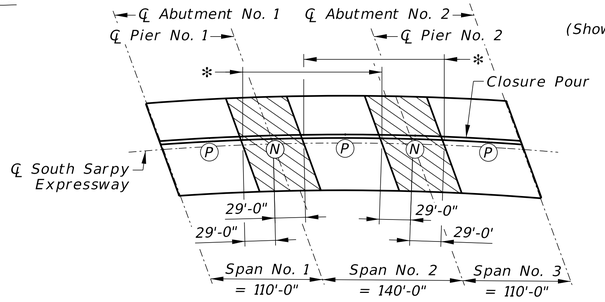

POURING DIAGRAM
Not to Scale

POURING SEQUENCE:
Contractor shall maintain a minimum placement and finishing rate of at least 47.0 feet/hour along ℄ Bridge. This assumes the slab is poured in phases as detailed on the Typical Section sheet. Should the Contractor not possess the necessary equipment and facilities to maintain the minimum placement and finishing rate, the slab shall be placed in sections. All Positive moment sections of the slab shall be placed followed by placement of the Negative moment sections of the slab. Alternate procedures for placing deck concrete may be submitted for approval by the Contractor.

(P) = Positive moment section
(N) = Negative moment section
* Optional Construction Joints (Pour in direction of arrows)

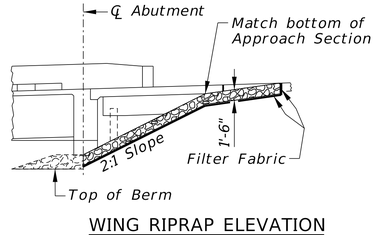

WING RIPRAP ELEVATION
Not to Scale

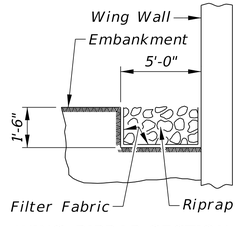

WING RIPRAP SECTION
Not to Scale

TRAFFIC DATA		
YEAR	2024	2050
ADT	7,850	40,200
DHV	940	3,335
HEAVY TRUCKS	12%	8%

PRELIMINARY PLAN
NOT FINAL - SUBJECT TO CHANGE

HDR Engineering Inc.
1917 South 67th Street
Omaha, NE 68106
Office: 402-399-1000
Nebraska C.O.A. CA-0443

S2

PROJECT NUMBER C-77 (25-15)

C.N.

LOCATION
SOUTH SARPY EXPRESSWAY

STRUCTURE NUMBER

360'-0" 3-SPAN PRESTRESSED CONCRETE GIRDER BRIDGE (NU1800)

GENERAL PLAN & ELEVATION

Q.C. ENGINEER: K. Devkota
DATE MARCH 2026
DETAILED BY: S. Saab
DESIGNED BY: R. Paradis

COUNTY SARPY
HWY. NO. ---
REF. POST. ---
STA. 11549+94.00
DESIGN CODE LRFD 9th Edition
SKEW Varies
ROADWAY 40'-0" WB/40'-0"
FHWA CONST. TYPE X081
DESIGN LIVE LOAD HL-93

SPECIAL PLAN NO. 1

2/31

Computer: 2M05130W92
Date: 13-FEB-2026 15:23
File: NDOT_2D_SP1.dgn

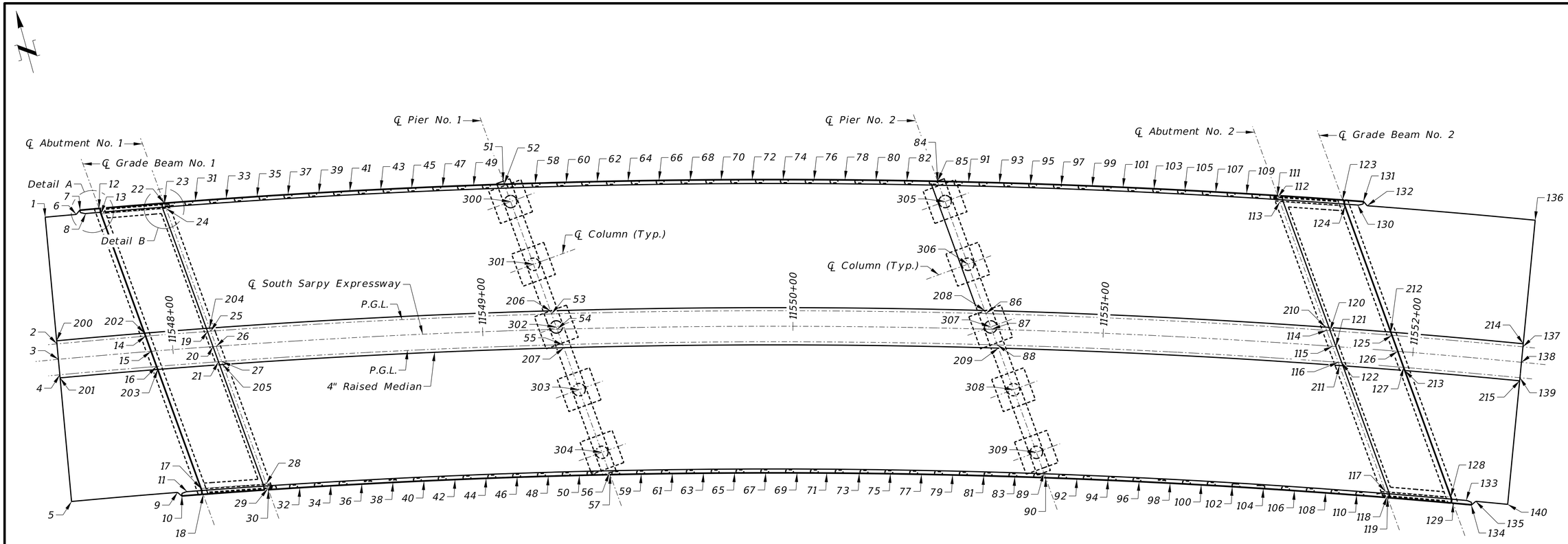

COORDINATE LAYOUT

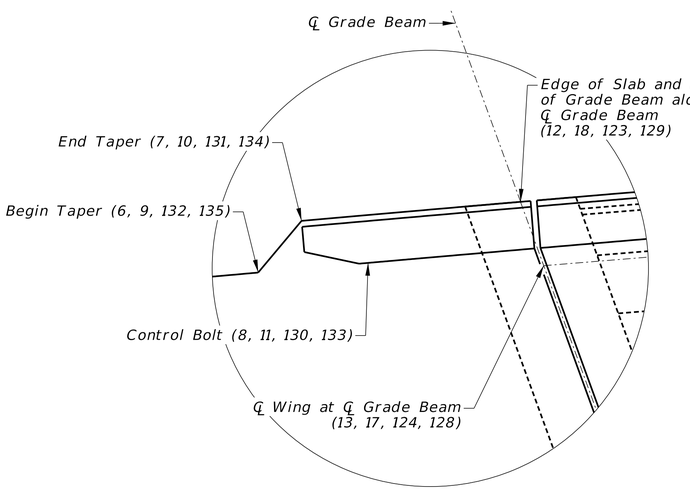

DETAIL A
Not to Scale

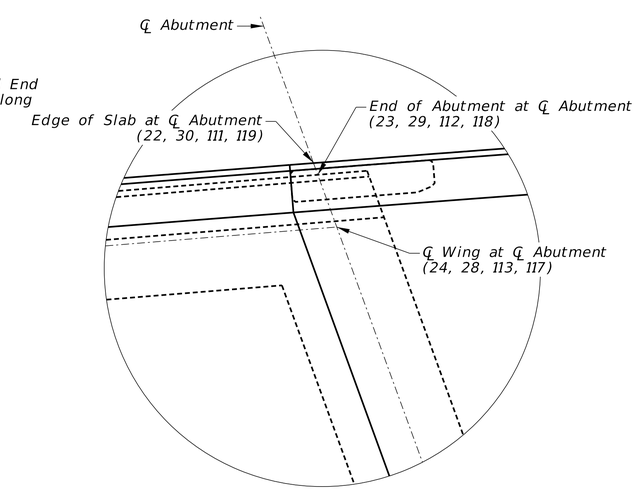

DETAIL B
Not to Scale

NOTES:
For Coordinate Data, see Sheet 4.
X = Easting
Y = Northing

CONTROL POINTS				
POINT	*STATION*	*OFFSET TO STA. (FEET)*	*X COORDINATE*	*Y COORDINATE*
3	*11552+59.63*	*1309.52 Lt.*	*2752433.16*	*486196.90*
1207	*11564+19.71*	*1024.95 Rt.*	*2752554.94*	*483560.33*

DATUM INFORMATION	
HORIZONTAL	VERTICAL
NAD 83 (1995)	*NAVD 88*
D.A.F. = 1.00037037	
UNITS = US SURVEY FEET	

PRELIMINARY PLAN
NOT FINAL - SUBJECT TO CHANGE

HDR Engineering Inc.
1917 South 67th Street
Omaha, NE 68106
Office: 402-399-1000
Nebraska C.O.A. CA-0443

S3

PROJECT NUMBER
C-77 (25-15)

C.N.

LOCATION
SOUTH SARPY EXPRESSWAY

STRUCTURE NUMBER

360'-0" 3-SPAN PRESTRESSED CONCRETE GIRDER BRIDGE (NU1800)

COORDINATE LAYOUT

Q.C. ENGINEER: *K. Devkota* DATE *MARCH 2026*

DESIGNED BY: *M. Wagner-Loos* DETAILED BY: *T. Sas*

COUNTY *SARPY*
HWY. NO. *---*
REF. POST. *---*
STA. *11549+94.00*
DESIGN CODE *LRFD 9th Edition*

SKEW *Varies*
ROADWAY *40'-0" WB/40'-0" EB*
FHWA CONST. TYPE *X081*
DESIGN LIVE LOAD *HL-93*

SPECIAL PLAN NO. *1*

Computer: 2MQ5130W92
Date: 13-FEB-2026 15:24
File: NDOT_2D_SP1.dgn

STATIONING OFFSETS & COORDINATES

POINT	STATION	OFFSET TO STA. (FEET)	X COORDINATE	Y COORDINATE
1	11547+62.96	46.00 Lt.	2751480.0814	485162.6490
2	11547+62.96	5.00 Lt.	2751472.7190	485122.3155
3	11547+62.96	0.00	2751471.8212	485117.3968
4	11547+62.96	5.00 Rt.	2751470.9233	485112.4780
5	11547+62.96	46.00 Rt.	2751463.5609	485072.1445
6	11547+72.84	46.00 Lt.	2751489.9771	485160.8225
7	11547+74.15	47.33 Lt.	2751491.5334	485161.8880
8	11547+75.87	46.00 Lt.	2751493.0081	485160.2549
9	11547+97.89	46.00 Rt.	2751497.2476	485065.7519
10	11547+99.25	47.33 Rt.	2751498.2969	485064.1858
11	11548+01.03	46.00 Rt.	2751500.2720	485065.1540
12	11547+80.18	47.33 Lt.	2751497.5706	485160.7505
13	11547+80.67	45.50 Lt.	2751497.7150	485158.8574
14	11547+91.59	5.00 Lt.	2751500.9062	485117.0033
15	11547+92.96	0.00	2751501.3005	485111.8327
16	11547+94.34	5.00 Rt.	2751501.6948	485106.6613
17	11548+05.73	45.50 Rt.	2751504.8909	485064.7434
18	11548+06.25	47.33 Rt.	2751505.0357	485062.8446
19	11548+11.54	5.00 Lt.	2751520.5202	485113.1091
20	11548+12.96	0.00	2751520.9153	485107.9269
21	11548+14.38	5.00 Rt.	2751521.3105	485102.7439
22	11548+00.80	47.33 Lt.	2751518.1956	485156.7505
23	11548+00.90	47.00 Lt.	2751518.2220	485156.4037
24	11548+01.30	45.50 Lt.	2751518.3403	485154.8528
25	11548+12.58	5.00 Lt.	2751521.5389	485112.9024
26	11548+14.00	0.00	2751521.9340	485107.7196
27	11548+15.42	5.00 Rt.	2751522.3293	485102.5360
28	11548+27.19	45.50 Rt.	2751525.5331	485060.5171
29	11548+27.63	47.00 Rt.	2751525.6517	485058.9617
30	11548+27.73	47.33 Rt.	2751525.6782	485058.6136
31	11548+10.60	47.33 Lt.	2751527.9861	485154.7898
32	11548+37.94	47.33 Rt.	2751535.4773	485056.5404
33	11548+20.40	47.33 Lt.	2751537.7684	485152.7909
34	11548+48.15	47.33 Rt.	2751545.2684	485054.4270
35	11548+30.20	47.33 Lt.	2751547.5424	485150.7538
36	11548+58.36	47.33 Rt.	2751555.0512	485052.2736
37	11548+40.00	47.33 Lt.	2751557.3078	485148.6784
38	11548+68.57	47.33 Rt.	2751564.8256	485050.0801
39	11548+49.79	47.33 Lt.	2751567.0645	485146.5649
40	11548+78.77	47.33 Rt.	2751574.5915	485047.8466
41	11548+59.59	47.33 Lt.	2751576.8125	485144.4133
42	11548+89.00	47.33 Rt.	2751584.3487	485045.5731

STATIONING OFFSETS & COORDINATES

POINT	STATION	OFFSET TO STA. (FEET)	X COORDINATE	Y COORDINATE
43	11548+69.39	47.33 Lt.	2751586.5514	485142.2236
44	11548+99.21	47.33 Rt.	2751594.0971	485043.2597
45	11548+79.18	47.33 Lt.	2751596.2811	485139.9959
46	11549+09.42	47.33 Rt.	2751603.8364	485040.9063
47	11548+88.98	47.33 Lt.	2751606.0016	485137.7302
48	11549+19.63	47.33 Rt.	2751613.5666	485038.5130
49	11548+98.77	47.33 Lt.	2751615.7126	485135.4266
50	11549+29.85	47.33 Rt.	2751623.2875	485036.0798
51	11549+08.28	48.25 Lt.	2751625.3410	485134.0414
52	11549+08.57	47.33 Lt.	2751625.4140	485133.0850
53	11549+22.34	5.00 Lt.	2751628.8019	485088.6515
54	11549+24.00	0.00	2751629.2024	485083.3980
55	11549+25.66	5.00 Rt.	2751629.6031	485078.1434
56	11549+39.82	46.65 Rt.	2751632.9437	485034.3308
57	11549+40.06	47.33 Rt.	2751632.9989	485033.6069
58	11549+18.36	47.33 Lt.	2751635.1057	485130.7056
59	11549+50.28	47.33 Rt.	2751642.7007	485031.0940
60	11549+28.15	47.33 Lt.	2751644.7872	485128.2883
61	11549+60.49	47.33 Rt.	2751652.3926	485028.5415
62	11549+37.95	47.33 Lt.	2751654.4589	485125.8333
63	11549+70.71	47.33 Rt.	2751662.0748	485025.9492
64	11549+47.74	47.33 Lt.	2751664.1202	485123.3406
65	11549+80.93	47.33 Rt.	2751671.7467	485023.3172
66	11549+57.53	47.33 Lt.	2751673.7713	485120.8102
67	11549+91.15	47.33 Rt.	2751681.4085	485020.6455
68	11549+67.32	47.33 Lt.	2751683.4116	485118.2422
69	11550+01.36	47.33 Rt.	2751691.0597	485017.9342
70	11549+77.11	47.33 Lt.	2751693.0413	485115.6365
71	11550+11.58	47.33 Rt.	2751700.7005	485015.1832
72	11549+86.90	47.33 Lt.	2751702.6601	485112.9934
73	11550+21.80	47.33 Rt.	2751710.3306	485012.3928
74	11549+96.69	47.33 Lt.	2751712.2680	485110.3128
75	11550+32.02	47.33 Rt.	2751719.9498	485009.5627
76	11550+06.48	47.33 Lt.	2751721.8646	485107.5947
77	11550+42.24	47.33 Rt.	2751729.5580	485006.6932
78	11550+16.27	47.33 Lt.	2751731.4500	485104.8393
79	11550+52.47	47.33 Rt.	2751739.1551	485003.7843
80	11550+26.06	47.33 Lt.	2751741.0238	485102.0465
81	11550+62.69	47.33 Rt.	2751748.7408	485000.8359
82	11550+35.84	47.33 Lt.	2751750.5861	485099.2165
83	11550+72.91	47.33 Rt.	2751758.3151	484997.8481
84	11550+45.63	47.33 Lt.	2751760.1365	485096.3492

STATIONING OFFSETS & COORDINATES

POINT	STATION	OFFSET TO STA. (FEET)	X COORDINATE	Y COORDINATE
85	11550+45.64	47.31 Lt.	2751760.1388	485096.3201
86	11550+62.02	5.00 Lt.	2751763.5926	485051.0219
87	11550+64.00	0.00	2751764.0014	485045.6605
88	11550+65.98	5.00 Rt.	2751764.4103	485040.2974
89	11550+82.45	45.67 Rt.	2751767.7414	484996.6095
90	11550+83.13	47.33 Rt.	2751767.8777	484994.8210
91	11550+55.42	47.33 Lt.	2751769.6751	485093.4448
92	11550+93.36	47.33 Rt.	2751777.4286	484991.7546
93	11550+65.20	47.33 Lt.	2751779.2015	485090.5032
94	11551+03.59	47.33 Rt.	2751786.9676	484988.6489
95	11550+74.99	47.33 Lt.	2751788.7157	485087.5246
96	11551+13.81	47.33 Rt.	2751796.4944	484985.5040
97	11550+84.77	47.33 Lt.	2751798.2175	485084.5090
98	11551+24.04	47.33 Rt.	2751806.0091	484982.3199
99	11550+94.55	47.33 Lt.	2751807.7067	485081.4565
100	11551+34.27	47.33 Rt.	2751815.5113	484979.0967
101	11551+04.33	47.33 Lt.	2751817.1832	485078.3671
102	11551+44.49	47.33 Rt.	2751825.0010	484975.8343
103	11551+14.12	47.33 Lt.	2751826.6469	485075.2408
104	11551+54.72	47.33 Rt.	2751834.4781	484972.5329
105	11551+23.90	47.33 Lt.	2751836.0976	485072.0778
106	11551+64.95	47.33 Rt.	2751843.9423	484969.1925
107	11551+33.68	47.33 Lt.	2751845.5351	485068.8780
108	11551+75.19	47.33 Rt.	2751853.3935	484965.8132
109	11551+43.46	47.33 Lt.	2751854.9594	485065.6417
110	11551+85.42	47.33 Rt.	2751862.8316	484962.3948
111	11551+53.23	47.33 Lt.	2751864.3701	485062.3687
112	11551+53.45	46.84 Lt.	2751864.4114	485061.8272
113	11551+54.02	45.50 Lt.	2751864.5223	485060.3729
114	11551+71.77	5.00 Lt.	2751867.8893	485016.2130
115	11551+74.00	0.00	2751868.3058	485010.7514
116	11551+76.24	5.00 Rt.	2751868.7224	485005.2876
117	11551+94.79	45.50 Rt.	2751872.1031	484960.9483
118	11551+95.42	46.84 Rt.	2751872.2148	484959.4832
119	11551+95.65	47.33 Rt.	2751872.2564	484958.9376
120	11551+72.86	5.00 Lt.	2751868.9204	485015.8433
121	11551+75.10	0.00	2751869.3369	485010.3806
122	11551+77.34	5.00 Rt.	2751869.7536	485004.9158
123	11551+73.86	47.33 Lt.	2751884.1781	485055.3444
124	11551+74.67	45.50 Lt.	2751884.3308	485053.3413
125	11551+92.81	5.00 Lt.	2751887.7104	485009.0163
126	11551+95.10	0.00	2751888.1284	485003.5339

STATIONING OFFSETS & COORDINATES

POINT	STATION	OFFSET TO STA. (FEET)	X COORDINATE	Y COORDINATE
127	11551+97.39	5.00 Rt.	2751888.5466	484998.0491
128	11552+16.36	45.50 Rt.	2751891.9406	484953.5358
129	11552+17.24	47.33 Rt.	2751892.0946	484951.5170
130	11551+79.91	46.00 Lt.	2751888.7575	485052.2764
131	11551+80.83	47.33 Lt.	2751890.8612	485051.2259
132	11551+82.14	46.00 Lt.	2751891.6567	485051.2259
133	11552+21.44	46.00 Rt.	2751896.4231	484951.2987
134	11552+23.22	47.33 Rt.	2751897.5827	484949.4296
135	11552+24.58	46.00 Rt.	2751899.3035	484950.1996
136	11552+35.10	46.00 Lt.	2751942.1528	485032.2874
137	11552+35.10	5.00 Lt.	2751927.3494	484994.0532
138	11552+35.10	0.00	2751925.5441	484989.3905
139	11552+35.10	5.00 Rt.	2751923.7388	484984.7278
140	11552+35.10	46.00 Rt.	2751908.9353	484946.4935
200	11547+62.96	6.00 Lt.	2751472.8986	485123.2992
201	11547+62.96	6.00 Rt.	2751470.7437	485111.4943
202	11547+91.31	6.00 Lt.	2751500.8274	485118.0373
203	11547+94.62	6.00 Rt.	2751501.7736	485105.6269
204	11548+12.30	6.00 Lt.	2751521.4599	485113.9389
205	11548+15.71	6.00 Rt.	2751522.4083	485101.4992
206	11549+22.01	6.00 Lt.	2751628.7218	485089.7020
207	11549+26.00	6.00 Rt.	2751629.6832	485077.0924
208	11550+61.63	6.00 Lt.	2751763.5109	485052.0940
209	11550+66.38	6.00 Rt.	2751764.4921	485039.2246
210	11551+71.32	6.00 Lt.	2751867.8061	485017.3051
211	11551+76.69	6.00 Rt.	2751868.8057	485004.1946
212	11551+92.35	6.00 Lt.	2751887.6268	485010.1125
213	11551+97.85	6.00 Rt.	2751888.6303	484996.9519
214	11552+35.10	6.00 Lt.	2751927.7104	484994.9857
215	11552+35.10	6.00 Rt.	2751923.3777	484983.7952
300	11549+10.41	41.59 Lt.	2751625.8732	485127.0617
301	11549+17.02	21.16 Lt.	2751627.5078	485105.6239
302	11549+23.75	0.75 Lt.	2751629.1423	485084.1861
303	11549+30.59	19.64 Rt.	2751630.7769	485062.7483
304	11549+37.54	40.02 Rt.	2751632.4115	485041.3106
305	11550+48.13	40.78 Lt.	2751760.6709	485089.3404
306	11550+55.85	20.75 Lt.	2751762.3055	485067.9026
307	11550+63.70	0.75 Lt.	2751763.9401	485046.4648
308	11550+71.68	19.23 Rt.	2751765.5746	485025.0270
309	11550+79.78	39.18 Rt.	2751767.2092	485003.5893

NOTES:
X = Easting
Y = Northing
For Coordinate Layout, see Sheet 3.

PRELIMINARY PLAN
NOT FINAL - SUBJECT TO CHANGE

HDR Engineering Inc.
1917 South 67th Street
Omaha, NE 68106
Office: 402-399-1000
Nebraska C.O.A. CA-0443

S4

PROJECT NUMBER
C-77 (25-15)

C.N.

LOCATION
SOUTH SARPY EXPRESSWAY

STRUCTURE NUMBER

360'-0" 3-SPAN PRESTRESSED CONCRETE GIRDER BRIDGE (NU1800)
COORDINATE DATA

SKEW Varies
ROADWAY 40'-0" WB/40'-0" EB
FHWA CONST. TYPE X081
DESIGN LIVE LOAD HL-93
DESIGN CODE LRFD 9th Edition
STA. 11549+94.00
REF. POST. ---
HWY. NO. ---
COUNTY SARPY

Q.C. ENGINEER: K. Devkota
DATE MARCH 2026
DESIGNED BY: M. Wagner-Loos
DETAILED BY: T. Sas
CHECKED BY: T. Sas

SPECIAL PLAN NO. 1

4 / 31

Computer: 2MQ5130W92
Date: 13-FEB-2026 15:24
File: NDOT_2D_SP1.dgn

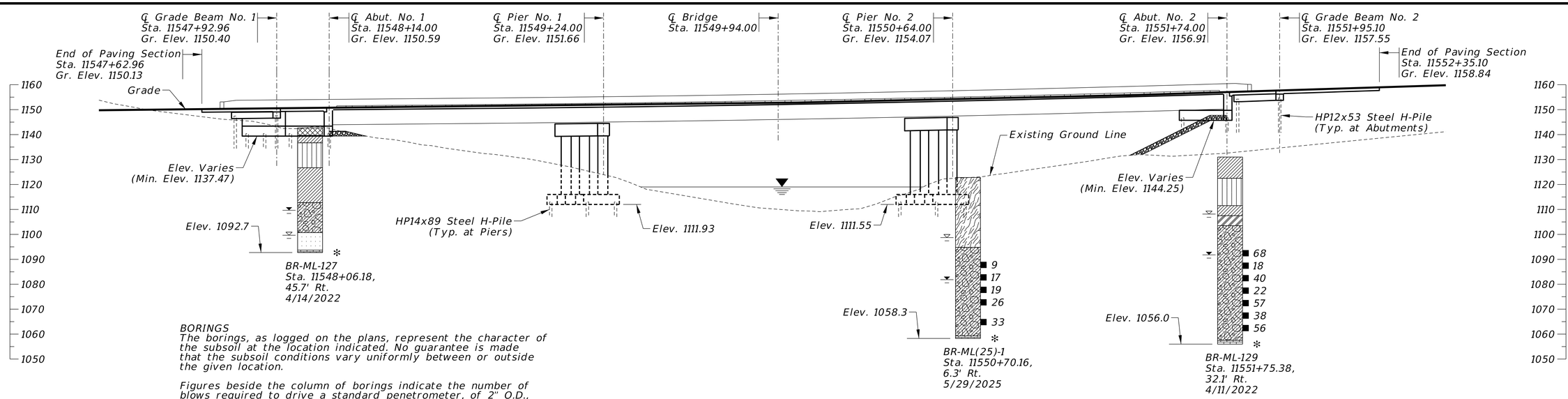

BORINGS
The borings, as logged on the plans, represent the character of the subsoil at the location indicated. No guarantee is made that the subsoil conditions vary uniformly between or outside the given location.

Figures beside the column of borings indicate the number of blows required to drive a standard penetrometer, of 2" O.D., the second and third 6 inches using a 140 lb. weight falling 30 inches, in accordance with ASTM D1586 procedures.

✻ Indicates refusal, greater than 50 blows in 6 inches.

GEOLOGICAL PROFILE

GEOLOGICAL LEGEND

ALLUVIUM | CH | CL | FILL | LIMESTONE | ML | SANDSTONE | TILL

Water Level While Drilling
Water Level at End of Drilling

TEST PILE DATA				
LOCATION	PILE NUMBER	CUT-OFF ELEVATION	PILE ORDER LENGTH (feet)	DESIGN PILE BEARING (kips/pile)
Abutment No. 1	*11*	*1139.94*	*60*	*219*
Pier No. 1	*22*	*1112.93*	*65*	*337*
Pier No. 2	*22*	*1112.55*	*65*	*337*
Abutment No. 2	*11*	*1146.22*	*100*	*219*

PILE DATA							
LOCATION	PILE NUMBER	CUT-OFF ELEVATION	MINIMUM PENETRATION BELOW CUT-OFF (feet)	TENTATIVE PILE ORDER LENGTH (feet)	PILE ORDER LENGTH (feet)	DESIGN PILE BEARING (kips/pile)	PILE TYPE
Grade Beam No. 1	*1-3*	*1148.77*		*45*		*140*	*HP12x53*
	4, 5	*1148.44*					
	6-8	*1147.81*					
	9, 10	*1147.33*					
	11, 12	*1146.70*					
	13, 14	*1146.06*					
Abutment No. 1	*1, 2*	*1143.36*		*50*		*219*	*HP12x53*
	3, 4	*1141.36*					
	5, 6	*1141.04*					
	7, 8	*1140.67*					
	9, 10	*1140.30*					
	12	*1139.94*					
	13, 14	*1139.57*					
	15, 16	*1139.20*					
	17, 18	*1138.83*					
	19, 20	*1138.47*					
	21, 22	*1140.47*					
Pier No. 1	*1-21, 23-40*	*1112.93*		*55*		*337*	*HP14x89*

PILE DATA (CONT.)							
LOCATION	PILE NUMBER	CUT-OFF ELEVATION	MINIMUM PENETRATION BELOW CUT-OFF (feet)	TENTATIVE PILE ORDER LENGTH (feet)	PILE ORDER LENGTH (feet)	DESIGN PILE BEARING (kips/pile)	PILE TYPE
Pier No. 2	*1-21, 23-40*	*1112.55*		*55*		*337*	*HP14x89*
Abutment No. 2	*1, 2*	*1149.18*		*90*		*219*	*HP12x53*
	3, 4	*1147.18*					
	5, 6	*1146.94*					
	7, 8	*1146.70*					
	9, 10	*1146.46*					
	12	*1146.22*					
	13, 14	*1145.98*					
	15, 16	*1145.74*					
	17, 18	*1145.50*					
	19, 20	*1145.25*					
	21, 22	*1147.25*					
Grade Beam No. 2	*1-3*	*1155.55*		*85*		*140*	*HP12x53*
	4, 5	*1155.31*					
	6-8	*1154.83*					
	9, 10	*1154.59*					
	11, 12	*1154.13*					
	13, 14	*1153.66*					

NOTE:

See Sheet 6 for Pile Layout.

I, Jacob Sellin, reviewed the geological notes, boring data, pile data, and pile details.

PROFESSIONAL CIVIL ENGINEER ✻ JACOB P. SELLIN E-20722 ✻ STATE OF NEBRASKA

PRELIMINARY PLAN
NOT FINAL - SUBJECT TO CHANGE

HDR Engineering Inc.
1917 South 67th Street
Omaha, NE 68106
Office: 402-399-1000
Nebraska C.O.A. CA-0443

S5

PROJECT NUMBER
C-77 (25-15)

C.N.

LOCATION
SOUTH SARPY EXPRESSWAY

STRUCTURE NUMBER

360'-0" 3-SPAN PRESTRESSED CONCRETE GIRDER BRIDGE (NU1800)

GEOLOGICAL PROFILE

Q.C. ENGINEER: *K. Devkota* DATE *MARCH 2026*

DESIGNED BY: *R. Paradis* DETAILED BY: *E. Sorens*

COUNTY *SARPY* SKEW *Varies*
HWY. NO. *---* ROADWAY *40'-0" WB/40'-0" EB*
REF. POST. *---* FHWA CONST. TYPE *X081*
STA. *11549+94.00* DESIGN LIVE LOAD *HL-93*
DESIGN CODE *LRFD 9th Edition*

SPECIAL PLAN NO. 1

5 / 31

Computer: 2MQS1GOWDA$$$$ Date: 13-FEB-2026 15:24 File: NDOT_2D_SP1.dgn

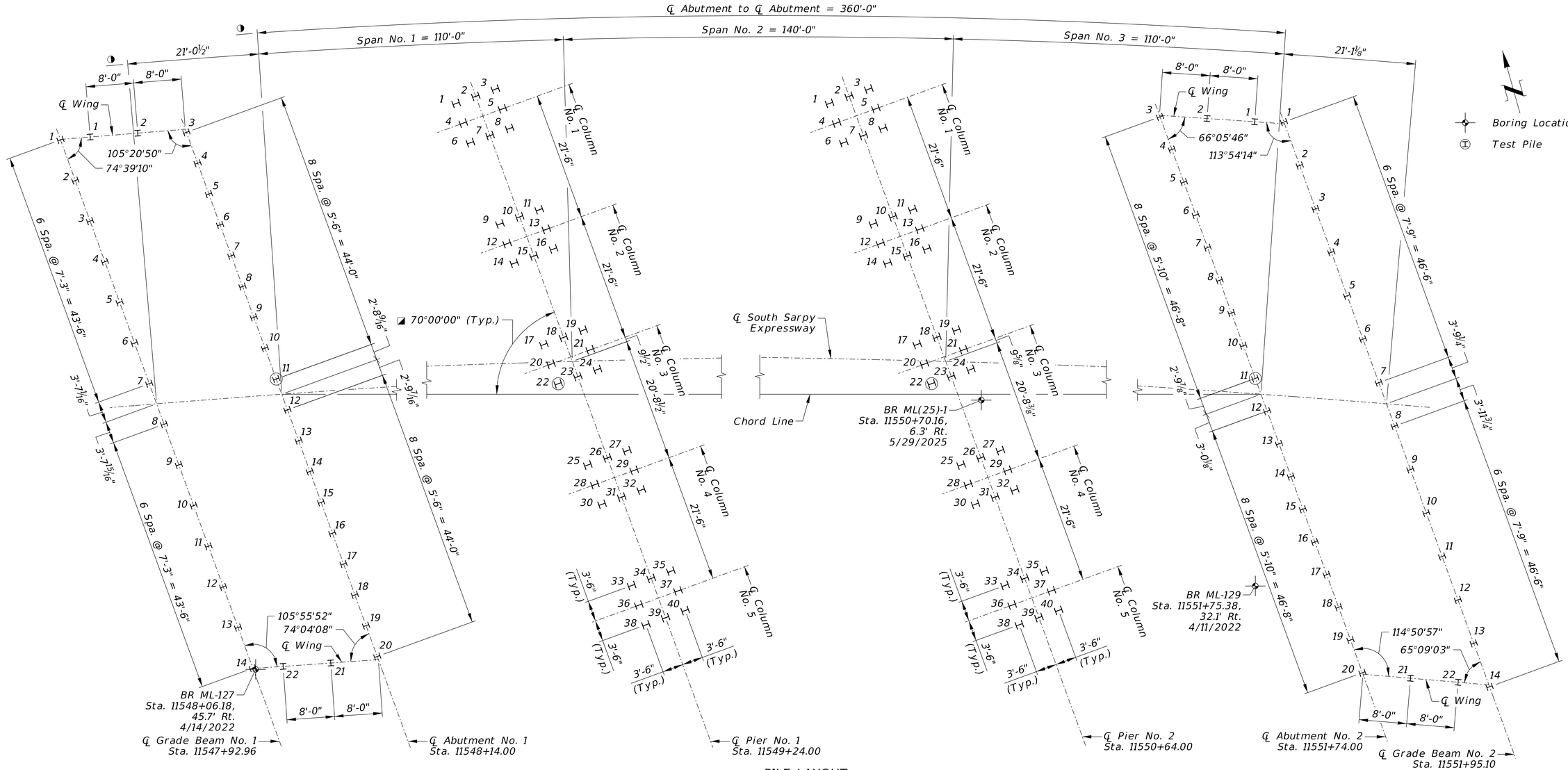

PILE LAYOUT

NOTES:
All pile spacing is given at the bottom of concrete.

Prefabricated cast steel points will be required on all HP piles in this structure. They shall conform to the requirements of ASTM A27 Grade 70-36 or ASTM A148 Grade 90-60 and be listed on the NDOT Approved Products List.

Paragraphs 1.a & 1.b of Subsection 703.03 of the Standard Specifications shall be revised to require the Contractor to perform the wave equation analysis and shall submit the results of the analysis including the Hammer Data sheet to the Engineer for review and approval. The analysis shall be sealed by a professional engineer licensed in the state of Nebraska.

Test piles shall be driven, as shown in the TEST PILE DATA table.

Pile order lengths, except for those shown for the test piles, are tentative. The final order lengths shall be based on the results obtained from the test pile driving.

The driving of the test pile will be monitored with a Pile Driving Analyzer. The use of the Pile Driving Analyzer will require the Contractor to set up the hammer for driving. The Contractor shall bolt two accelerometers and two strain transducers to the pile before driving is started.

The holes or anchors for the accelerometers and strain transducers will have been predrilled by Third-Party Testing Agency personnel while the pile is still on the ground. The Contractor may be required to stop the hammer for wave speed determination after the first few blows.

The Contractor shall drive the pile until the transducers are near the surface of the ground, or as directed by the Engineer, at which time the Contractor shall stop the hammer for the removal of the accelerometers and strain transducers. The Contractor shall then continue driving the pile to cut-off or as directed by the Engineer.

The time delay in driving each pile being monitored by the Pile Driving Analyzer will normally range from 30 to 60 minutes.

The Contractor shall provide access to the pile driving area for the Third-Party Testing Agency equipment vehicle (light truck). The work performed by the Contractor, in conjunction with the use of the Pile Driving Analyzer, as described herein, shall not be paid for directly, but shall be considered subsidiary to items for which direct payment is made.

Final order lengths will be provided by the Engineer to the Contractor within three working days after the test pile.

◪ Measured to chord line. All ℄'s of piers, abutments and grade beams are parallel.

◑ Measured along ℄ South Sarpy Expressway.

See Sheet 5 for Pile Data and Test Pile Data Tables.

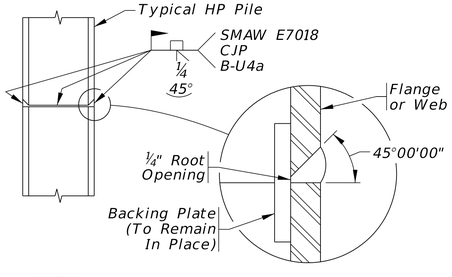

NOTE:
See "FIELD WELDING GUIDE" for Steel Pile Splice welding requirements and procedure. The Guide is located under "PROJECT MANAGER RESOURCES" on the NDOT Website.

STANDARD PILE SPLICE

I, Jacob Sellin, reviewed the geological notes, boring data, pile data, and pile details.

PROFESSIONAL CIVIL ENGINEER
JACOB P. SELLIN
E-20722
STATE OF NEBRASKA

PRELIMINARY PLAN
NOT FINAL - SUBJECT TO CHANGE

HDR Engineering Inc.
1917 South 67th Street
Omaha, NE 68106
Office: 402-399-1000
Nebraska C.O.A. CA-0443

S6

PROJECT NUMBER
C-77 (25-15)

C.N.

LOCATION
SOUTH SARPY EXPRESSWAY

STRUCTURE NUMBER

360'-0" 3-SPAN PRESTRESSED CONCRETE GIRDER BRIDGE (NU1800)

PILE LAYOUT

SKEW Varies
ROADWAY 40'-0" WB/40'-0" EB
FHWA CONST. TYPE X081
DESIGN LIVE LOAD HL-93
DESIGN CODE LRFD 9th Edition
STA. 11549+94.00
REF. POST. ---
HWY. NO. ---
COUNTY SARPY

DESIGNED BY: R. Paradis
DETAILED BY: T. Sas
Q.C. ENGINEER: K. Devkota
DATE MARCH 2026

SPECIAL PLAN NO. 1
6/31

COMPUTER 2025130W92
DATE 3/17/2026 8:55:24
DGN NEBOS_SHEET_SPS.dgn

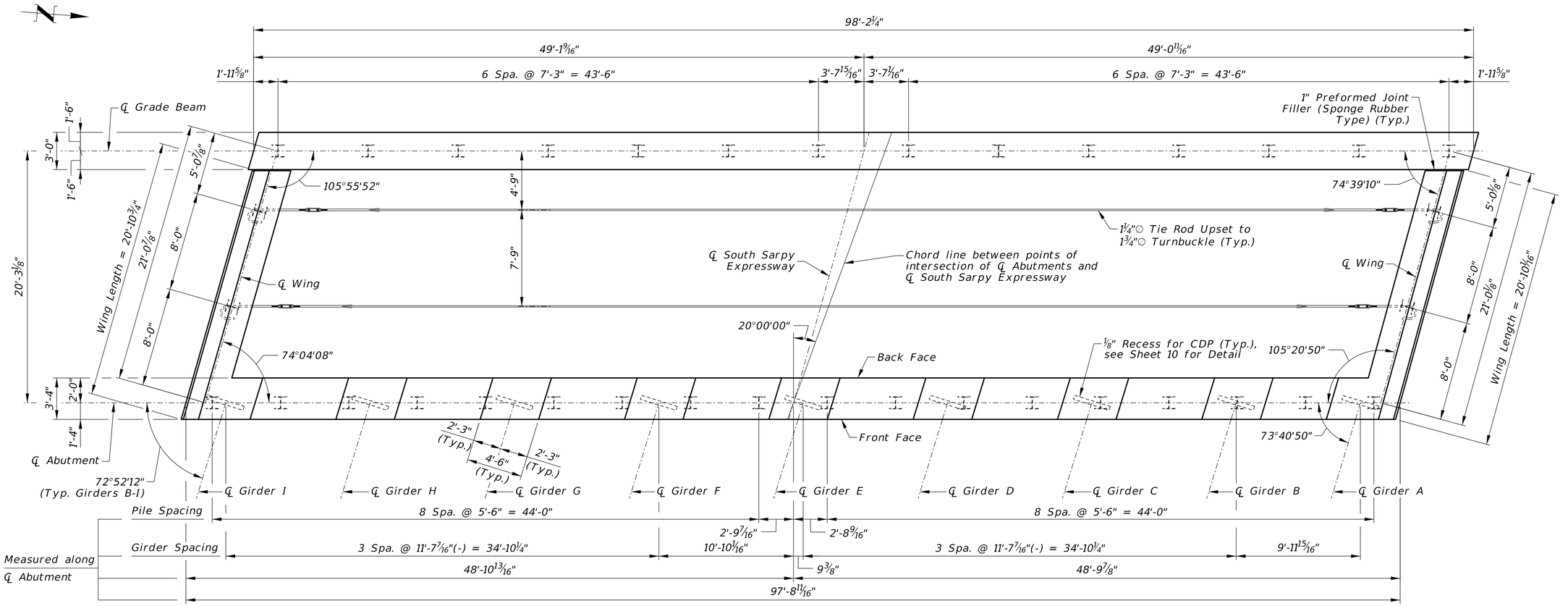

PLAN OF ABUTMENT NO. 1

NOTE:

Reinforcing not shown in plan view for clarity.

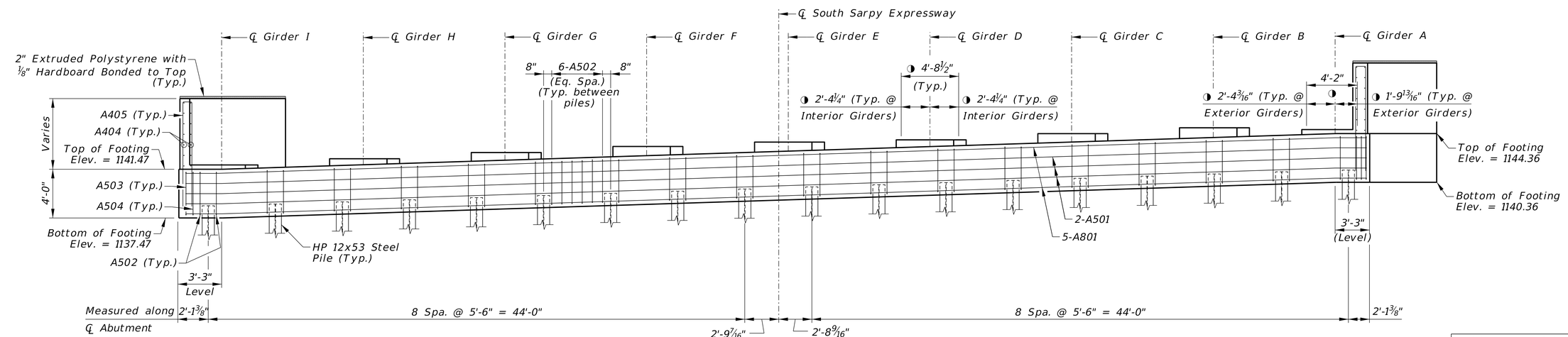

ELEVATION OF ABUTMENT NO. 1

NOTE:

◑ Measured along ℄ Abutment.

GIRDER SEAT ELEVATIONS

Girder A	Girder B	Girder C	Girder D	Girder E	Girder F	Girder G	Girder H	Girder I
1144.69	1144.85	1144.37	1143.86	1143.68	1143.32	1142.82	1142.31	1141.80

PRELIMINARY PLAN
NOT FINAL - SUBJECT TO CHANGE

HDR Engineering Inc.
1917 South 67th Street
Omaha, NE 68106
Office: 402-399-1000
Nebraska C.O.A. CA-0443

S7

PROJECT NUMBER C-77 (25-15)

C.N.

LOCATION
SOUTH SARPY EXPRESSWAY

STRUCTURE NUMBER

360'-0" 3-SPAN PRESTRESSED CONCRETE GIRDER BRIDGE (NU1800)

PLAN & ELEVATION OF ABUTMENT NO. 1

COUNTY SARPY
HWY. NO. ---
REF. POST. ---
STA. 11549+94.00
DESIGN CODE LRFD 9th Edition
SKEW Varies
ROADWAY 40'-0" WB/40'-0" EB
FHWA CONST. TYPE X081
DESIGN LIVE LOAD HL-93
Q.C. ENGINEER: R. Paradis
DATE MARCH 2026
DESIGNED BY: M. Wagner-Loos
DETAILED BY: T. Sas

SPECIAL PLAN NO. 1

7/31

Computer: 2MQS130W92
Date: 13-FEB-2026 15:24
File: NDOT_2D_SP1.dgn

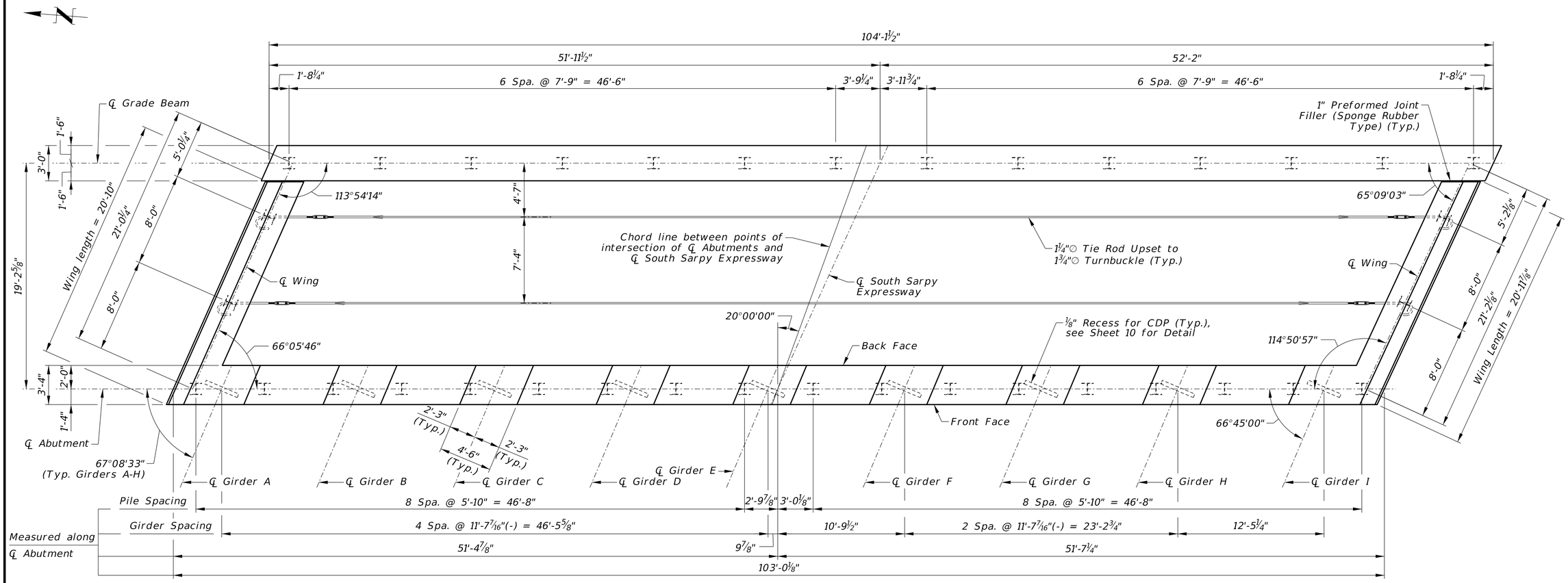

PLAN OF ABUTMENT NO. 2

NOTE:

Reinforcing not shown in plan view for clarity.

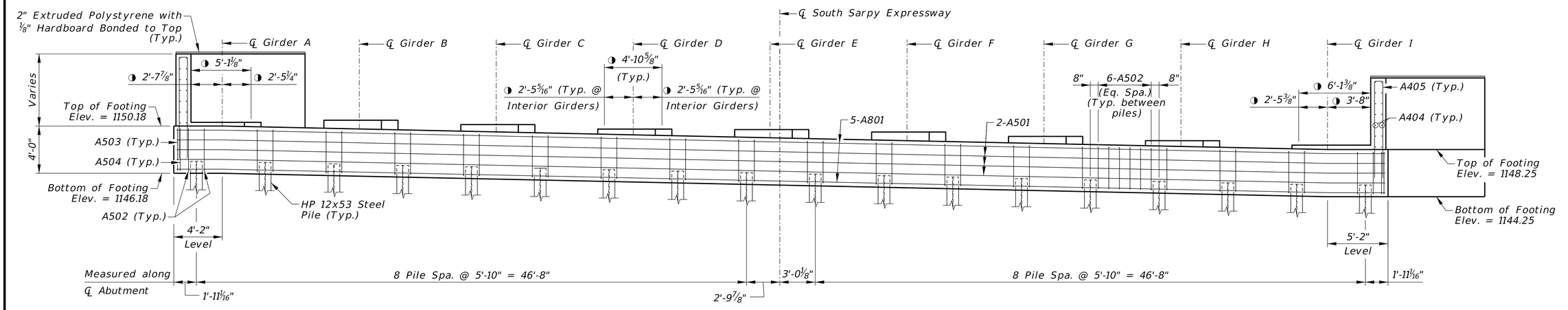

ELEVATION OF ABUTMENT NO. 2

GIRDER SEAT ELEVATIONS								
Girder A	Girder B	Girder C	Girder D	Girder E	Girder F	Girder G	Girder H	Girder I
1150.51	1150.69	1150.32	1149.94	1149.90	1149.69	1149.32	1148.96	1148.58

NOTE:

◑ Measured along ℄ Abutment.

PRELIMINARY PLAN
NOT FINAL - SUBJECT TO CHANGE

HDR Engineering Inc.
1917 South 67th Street
Omaha, NE 68106
Office: 402-399-1000
Nebraska C.O.A. CA-0443

S8

PROJECT NUMBER
C-77 (25-15)

C.N.

LOCATION
SOUTH SARPY EXPRESSWAY

STRUCTURE NUMBER

PLAN & ELEVATION OF ABUTMENT NO. 2
360'-0" 3-SPAN PRESTRESSED CONCRETE GIRDER BRIDGE (NU1800)

SKEW Varies
ROADWAY 40'-0" WB/40'-0" EB
FHWA CONST. TYPE X081
DESIGN LIVE LOAD HL-93
DESIGN CODE LRFD 9th Edition

COUNTY SARPY
HWY. NO. ---
REF. POST. ---
STA. 11549+94.00

Q.C. ENGINEER: R. Paradis
DATE MARCH 2026
DESIGNED BY: M. Wagner-Loos
DETAILED BY: T. Sas

SPECIAL PLAN NO. 1

8 / 31

Computer: 2M05130W92
Date: 13-FEB-2026 15:24
File: NDOT_2D_SP1.dgn

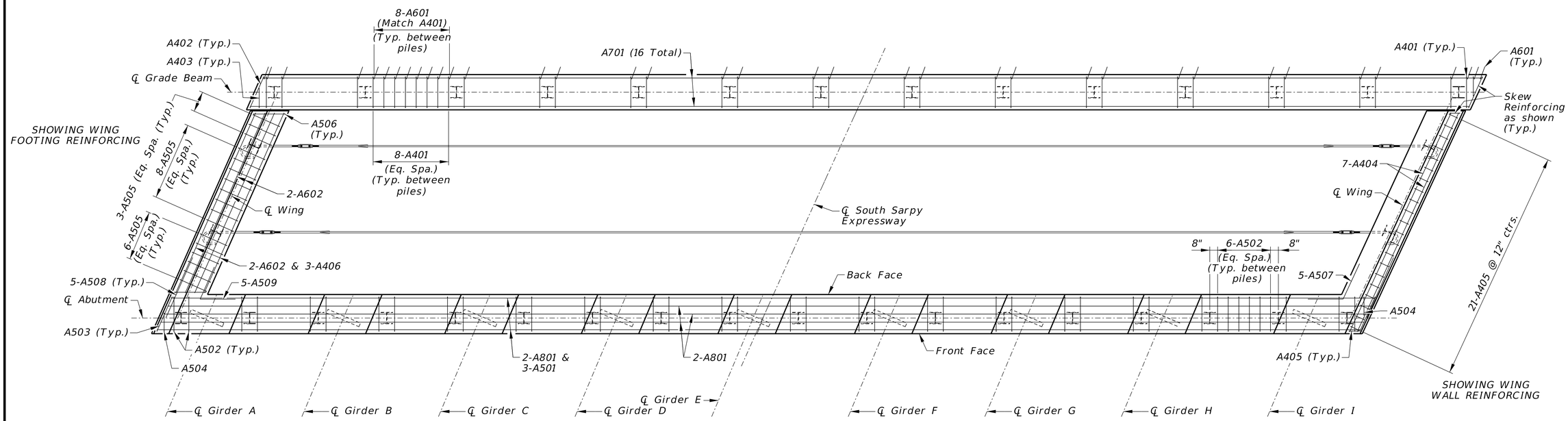

REINFORCING PLAN OF ABUTMENT

(Showing Abutment No. 2, Abutment No. 1 similiar)

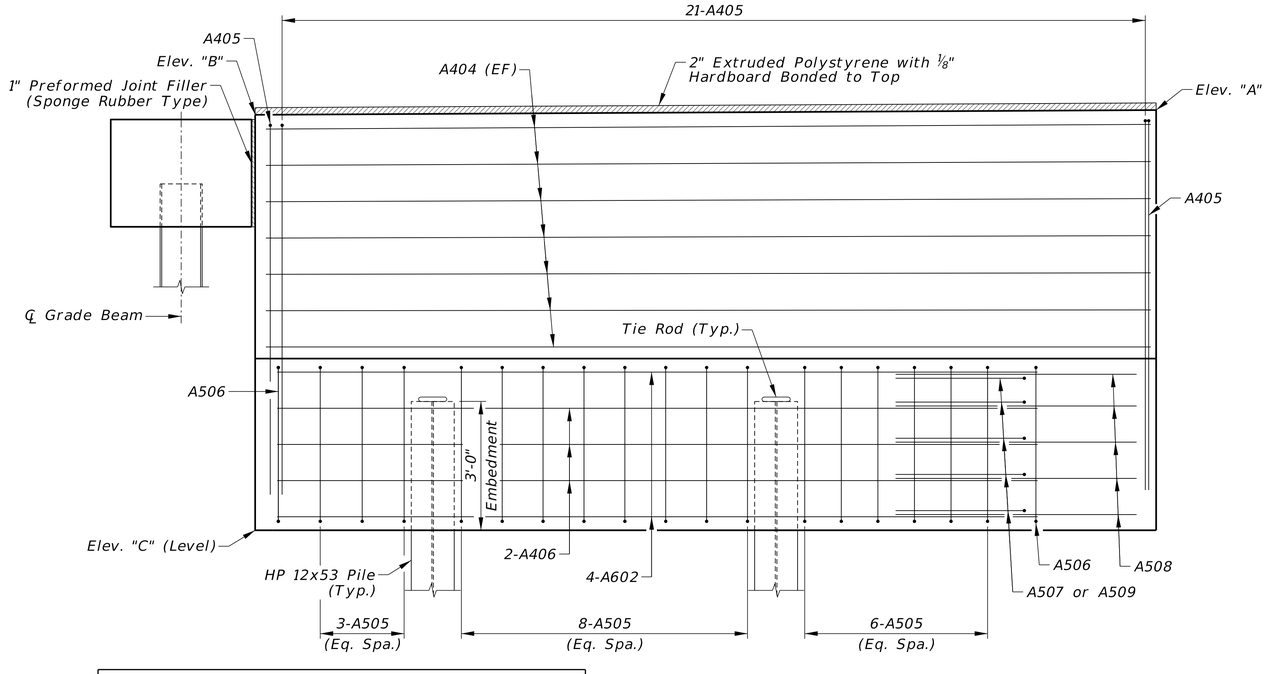

ELEVATION OF WING

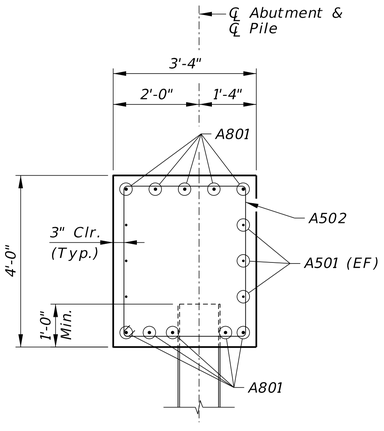

ABUTMENT SECTION

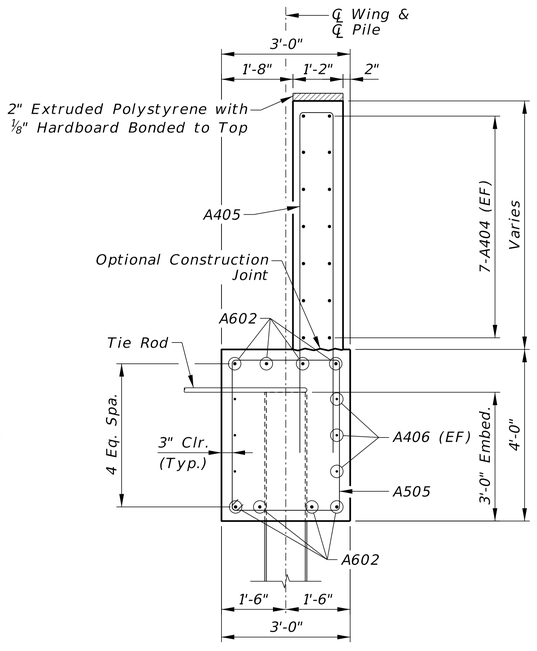

WING SECTION

TOP OF WING ELEVATION (Top of Concrete)				
Location		Elev. "A"	Elev. "B"	Elev. "C"
Abutment No. 1	North Wing	1150.25	1150.07	1140.36
	South Wing	1147.38	1147.18	1137.47
Abutment No. 2	North Wing	1156.04	1156.63	1146.18
	South Wing	1154.16	1154.84	1144.25

PRELIMINARY PLAN
NOT FINAL - SUBJECT TO CHANGE

HDR Engineering Inc.
1917 South 67th Street
Omaha, NE 68106
Office: 402-399-1000
Nebraska C.O.A. CA-0443

S9

PROJECT NUMBER
C-77 (25-15)

C.N.

LOCATION
SOUTH SARPY EXPRESSWAY

STRUCTURE NUMBER

360'-0" 3-SPAN PRESTRESSED CONCRETE GIRDER BRIDGE (NU1800)

ABUTMENT DETAILS (1 OF 2)

Q.C. ENGINEER: R. Paradis
DATE MARCH 2026

SKEW Varies
ROADWAY 40'-0" WB/40'-0" EB
FHWA CONST. TYPE X081
DESIGN LIVE LOAD HL-93
DESIGN CODE LRFD 9th Edition

COUNTY SARPY
HWY. NO. ---
REF. POST. ---
STA. 11549+94.00

DESIGNED BY: M. Wagner-Loos
DETAILED BY: T. Sas

SPECIAL PLAN NO. 1

9/31

Computer: 2MQ5130W92
Date: 13-FEB-2026 15:24
File: NDOT_2D_SP1.dgn

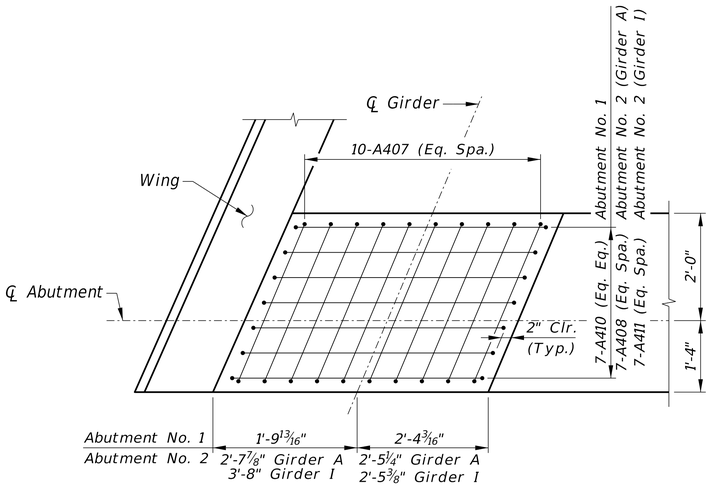

PLAN OF EXTERIOR ABUTMENT PEDESTAL

(Showing Abutment No. 2, Girder A, other locations similar)

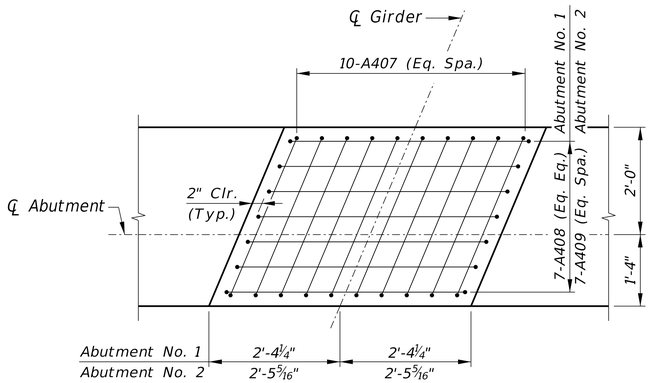

PLAN OF INTERIOR ABUTMENT PEDESTAL

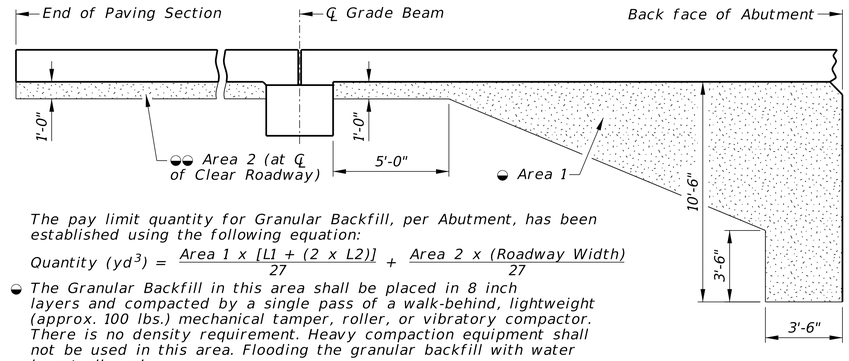

The pay limit quantity for Granular Backfill, per Abutment, has been established using the following equation:

$$\text{Quantity } (yd^3) = \frac{\text{Area 1} \times [L1 + (2 \times L2)]}{27} + \frac{\text{Area 2} \times (\text{Roadway Width})}{27}$$

◒ *The Granular Backfill in this area shall be placed in 8 inch layers and compacted by a single pass of a walk-behind, lightweight (approx. 100 lbs.) mechanical tamper, roller, or vibratory compactor. There is no density requirement. Heavy compaction equipment shall not be used in this area. Flooding the granular backfill with water is not allowed.*

◒◒ *The Granular Backfill in this area shall be compacted in accordance with the Standard Specifications.*

SECTION G1

Not to Scale

PLACEMENT OF RECESSES FOR CDP

AT ABUTMENTS

Not to Scale

Drainage Notes:

All miscellaneous drainage items at the abutments shall be considered subsidiary to the pay item "SUBSURFACE DRAINAGE MATTING".

Drainage Matting shall wrap around the sloping drain pipe and extend 3'-0" along the wings.

● *NO ADHESIVE CENTERED OVER JOINT*

(1) *Galvanized wire mesh screen*

(2) *Remove the matting as required to fold filter fabric over top of matting.*

(3) *Subsurface drainage matting. Place fabric side toward backfill.*

(4) *Remove the matting as required to wrap filter fabric around drain pipe.*

(5) *4" perforated plastic underdrain pipe shall conform to the requirements of Section 1038. The pipe must be continuous between abutment wings. Provide plugs at each end.*

(6) *2" plastic pipe shall conform to the requirements of ASTM D 1785 schedule 40. Pipe shall be placed at 10'-0" intervals with a 4% slope.*

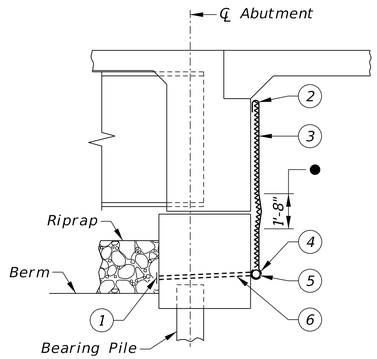

DRAINAGE DETAIL

Not to Scale

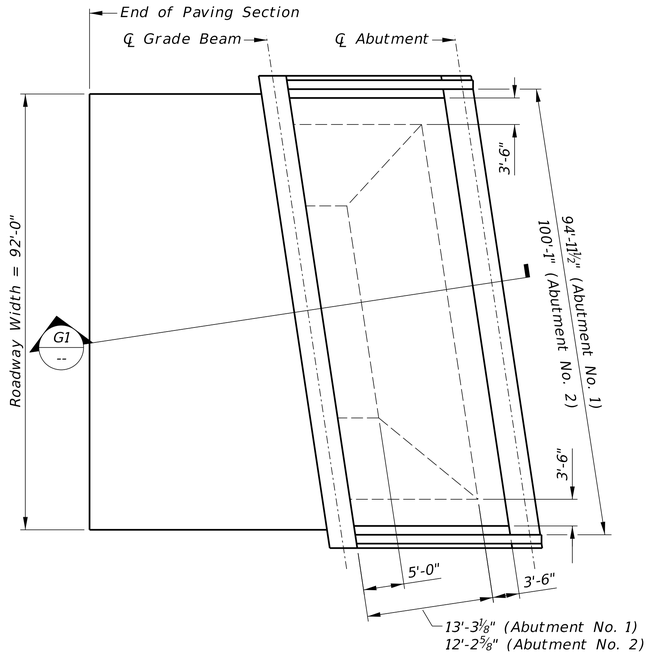

PLAN OF GRANULAR BACKFILL

Not to Scale

PRELIMINARY PLAN

NOT FINAL - SUBJECT TO CHANGE

HDR Engineering Inc.
1917 South 67th Street
Omaha, NE 68106
Office: 402-399-1000
Nebraska C.O.A. CA-0443

S10

PROJECT NUMBER C-77 (25-15)

C.N.

LOCATION SOUTH SARPY EXPRESSWAY

STRUCTURE NUMBER

360'-0" 3-SPAN PRESTRESSED CONCRETE GIRDER BRIDGE (NU1800)

ABUTMENT DETAILS (2 OF 2)

Q.C. ENGINEER: R. Paradis DATE MARCH 2026

DESIGNED BY: M. Wagner-Loos DETAILED BY: T. Sas CHECKED BY:

COUNTY SARPY HWY. NO. --- REF. POST. --- STA. 11549+94.00

SKEW Varies ROADWAY 40'-0" WB/40'-0" EB FHWA CONST. TYPE X081 DESIGN LIVE LOAD HL-93 DESIGN CODE LRFD 9th Edition

SPECIAL PLAN NO. 1

10/31

Computer: 2MQS130W92

Date: 13-FEB-2026 15:24

File: NDOT_2D_SP1.dgn

BILL OF BARS

ABUTMENT NO. 1

MARK	NUMBER OF BARS	LENGTH	TYPE	A	B	C	D	E	F	PIN Ø	HOOK	WEIGHT (LB)
A801	10	102'-11"	STR.	Includes 1 - 5'-8" lap								2748
A701	16	102'-9"	STR.	Includes 1 - 5'-0" lap								3360
A601	109	3'-0"	101	1'-6"	1'-6"	1'-1"				4½"		491
A602	16	17'-1"	STR.									411
A501	6	100'-10"	STR.	Includes 1 - 3'-7" lap								631
A502	104	13'-7"	107	3'-6"	2'-10"					2½"	5½"	1473
A503	2	13'-11"	107	3'-6"	3'-0"					2½"	5½"	29
A504	2	11'-7"	107	3'-6"	1'-10"					2½"	5½"	24
A505	34	12'-11"	107	3'-6"	2'-6"					2½"	5½"	458
A506	4	13'-1"	107	3'-6"	2'-7"					2½"	5½"	55
A507	5	6'-0"	105	3'-0"	3'-0"	10"				2½"		31
A508	10	6'-0"	STR.									63
A509	5	6'-0"	127	3'-0"	3'-0"	10"				2½"		31
A401	106	9'-9"	107	2'-0"	2'-6"					2"	4½"	690
A402	2	9'-11"	107	2'-0"	2'-7"					2"	4½"	13
A403	2	7'-11"	107	2'-0"	1'-7"					2"	4½"	11
A404	28	20'-3"	STR.									379
A405	46	16'-10"	103	8'-1"	8"	8'-1"				2"		517
A406	12	17'-1"	STR.									137
A407	90	7'-8"	103	2'-3"	3'-2"	2'-3"				2"		461
A408	49	8'-10"	103	2'-3"	4'-4"	2'-3"				2"		289
A410	14	7'-5"	103	1'-10"	3'-9"	1'-10"				2"		69
											TOTAL (LB) =	12371

For pin diameters, hook lengths and bending diagrams, see Sheet 31.

BILL OF BARS

ABUTMENT NO. 2

MARK	NUMBER OF BARS	LENGTH	TYPE	A	B	C	D	E	F	PIN Ø	HOOK	WEIGHT (LB)
A801	10	108'-3"	STR.	Includes 1 - 5'-8" lap								2890
A701	16	108'-8"	STR.	Includes 1 - 5'-0" lap								3554
A601	109	3'-0"	101	1'-6"	1'-6"	1'-1"				4½"		491
A602	16	17'-0"	STR.									409
A501	6	106'-2"	STR.	Includes 1 - 3'-7" lap								664
A502	104	13'-7"	107	3'-6"	2'-10"					2½"	5½"	1473
A503	2	14'-1"	107	3'-6"	3'-1"					2½"	5½"	29
A504	2	11'-7"	107	3'-6"	1'-10"					2½"	5½"	24
A505	34	12'-11"	107	3'-6"	2'-6"					2½"	5½"	458
A506	4	13'-5"	107	3'-6"	2'-9"					2½"	5½"	56
A507	5	6'-0"	105	3'-0"	3'-0"	1'-3"				2½"		31
A508	10	6'-0"	STR.									63
A509	5	6'-0"	127	3'-0"	3'-0"	1'-2½"				2½"		31
A401	106	9'-9"	107	2'-0"	2'-6"					2"	4½"	690
A402	2	10'-3"	107	2'-0"	2'-9"					2"	4½"	14
A403	2	7'-11"	107	2'-0"	1'-7"					2"	4½"	11
A404	28	20'-3"	STR.									379
A405	46	18'-4"	103	8'-10"	8"	8'-10"				2"		563
A406	12	17'-0"	STR.									136
A407	90	7'-8"	103	2'-3"	3'-2"	2'-3"				2"		461
A408	7	8'-5"	103	1'-10"	4'-9"	1'-10"				2"		39
A409	49	9'-0"	103	2'-3"	4'-6"	2'-3"				2"		295
A411	7	9'-5"	103	1'-10"	5'-9"	1'-10"				2"		44
											TOTAL (LB) =	12805

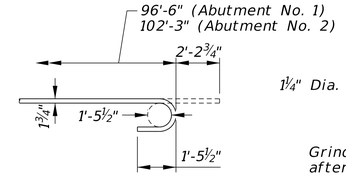

TIE ROD HOOK DETAIL
Not to Scale

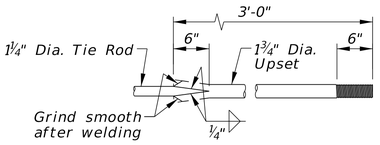

TIE ROD UPSET DETAIL
Not to Scale

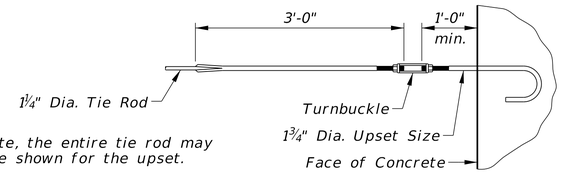

NOTE
As an alternate, the entire tie rod may be of the size shown for the upset.

DETAIL FOR TURNBUCKLES
Not to Scale

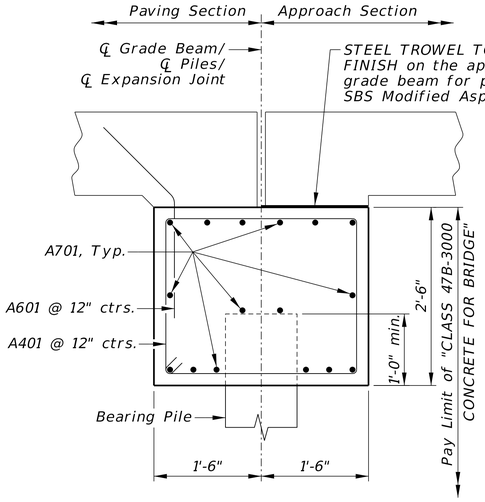

GRADE BEAM SECTION

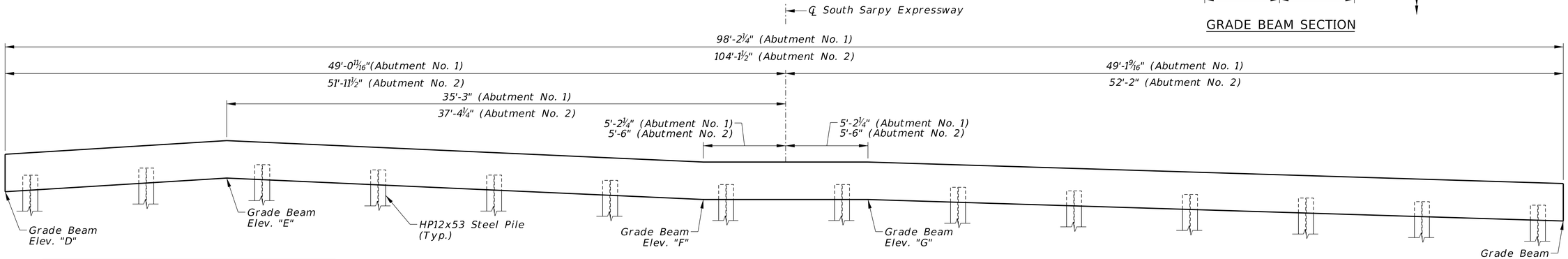

ELEVATION OF GRADE BEAM
(Looking Ahead Station)

GRADE BEAM ELEVATIONS
(Bottom of Concrete)

Location	Abutment No. 1	Abutment No. 2
Elev. "D"	1147.55	1154.17
Elev. "E"	1147.88	1154.64
Elev. "F"	1146.56	1153.64
Elev. "G"	1146.58	1153.78
Elev. "H"	1144.66	1152.38

PRELIMINARY PLAN
NOT FINAL - SUBJECT TO CHANGE

HDR Engineering Inc.
1917 South 67th Street
Omaha, NE 68106
Office: 402-399-1000
Nebraska C.O.A. CA-0443

S11

PROJECT NUMBER
C-77 (25-15)

C.N.

LOCATION
SOUTH SARPY EXPRESSWAY

STRUCTURE NUMBER

360'-0" 3-SPAN PRESTRESSED CONCRETE GIRDER BRIDGE (NU1800)

ABUTMENT DETAILS & BILL OF BARS

SKEW Varies
ROADWAY 40'-0" WB/40'-0" EB
FHWA CONST. TYPE X081
DESIGN LIVE LOAD HL-93
DESIGN CODE LRFD 9th Edition
STA. 11549+94.00
REF. POST. ---
HWY. NO. ---
COUNTY SARPY

Q.C. ENGINEER: R. Paradis
DATE MARCH 2026
DESIGNED BY: M. Wagner-Loos
DETAILED BY: T. Sas
BY: T. Sas

SPECIAL PLAN NO. 1

11/31

Computer: 2MQ5130W92
Date: 13-FEB-2026 15:24
File: NDOT_2D_SP1.dgn

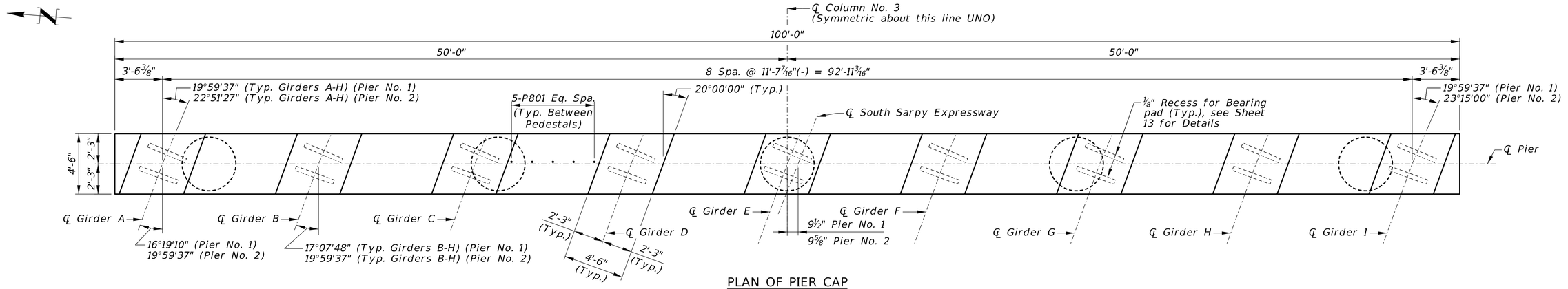

PLAN OF PIER CAP

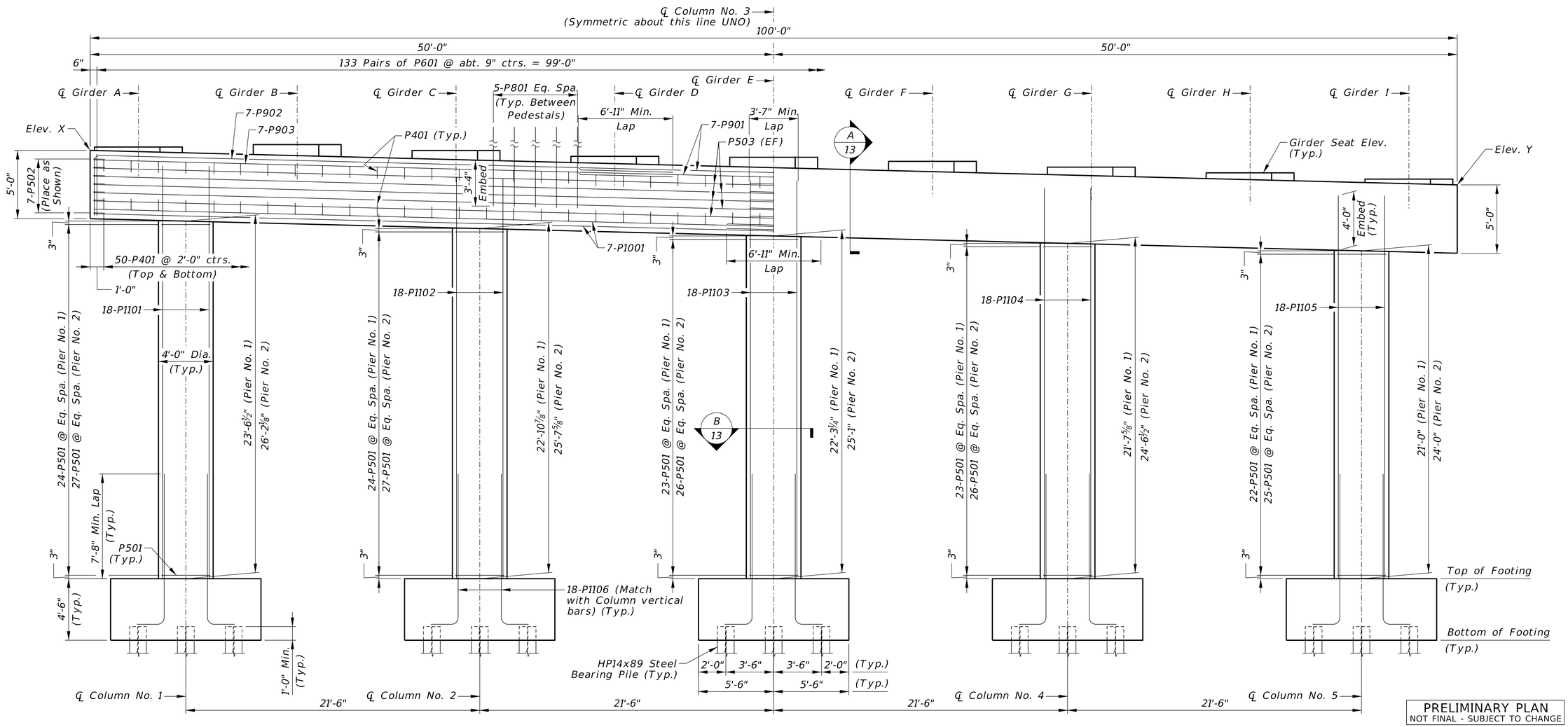

ELEVATION OF PIER CAP

NOTES:

For Girder Layout, see Sheet 15.

See Sheet 13 for elevations not shown on this sheet.

PRELIMINARY PLAN
NOT FINAL - SUBJECT TO CHANGE

HDR Engineering Inc.
1917 South 67th Street
Omaha, NE 68106
Office: 402-399-1000
Nebraska C.O.A. CA-0443

S12

PROJECT NUMBER
C-77 (25-15)

C.N.

LOCATION
SOUTH SARPY EXPRESSWAY

STRUCTURE NUMBER

360'-0" 3-SPAN PRESTRESSED CONCRETE GIRDER BRIDGE (NU1800)

PLAN & ELEVATION OF PIER

SKEW Varies
ROADWAY 40'-0" WB/40'-0" EB
FHWA CONST. TYPE X081
DESIGN LIVE LOAD HL-93
DESIGN CODE LRFD 9th Edition
STA. 11549+94.00
REF. POST. ---
HWY. NO. ---
COUNTY SARPY

Q.C. ENGINEER: M. Wagner-Loos DATE MARCH 2026
DESIGNED BY: T. Sas
DETAILED BY: K. Devkota
DESIGNED BY: K. Devkota

SPECIAL PLAN NO. 1

12 / 31

File: NDOT_2D_SP1.dgn
Computer: 2MQ5130W92
Date: 13-FEB-2026 15:24

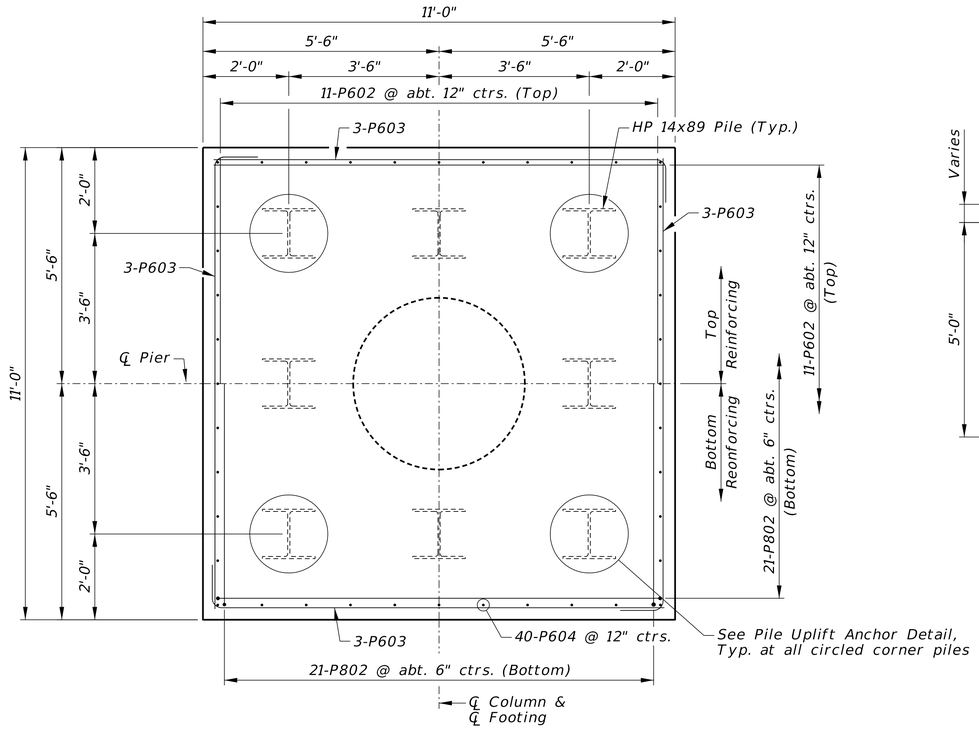

PLAN OF FOOTING

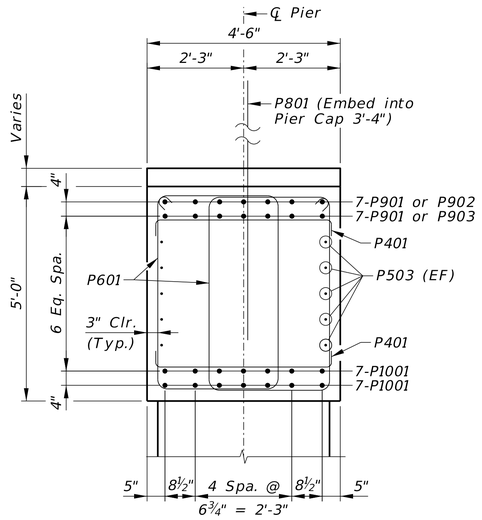

SECTION A/12

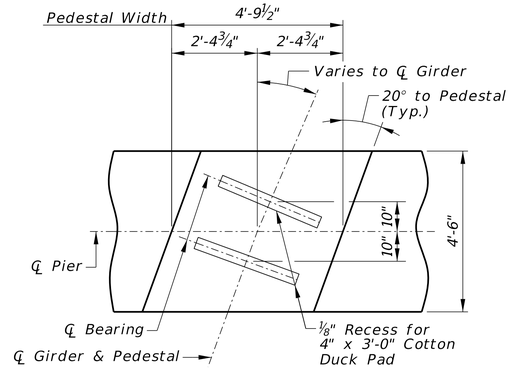

PLACEMENT OF RECESSES FOR CDP

AT PIERS
Not to Scale

GIRDER SEAT ELEVATIONS		
GIRDER	PIER NO. 1	PIER NO. 2
A	1145.41	1147.65
B	1145.59	1147.83
C	1145.11	1147.40
D	1144.63	1146.97
E	1144.49	1146.90
F	1144.14	1146.60
G	1143.66	1146.18
H	1143.18	1145.76
I	1142.66	1145.30

PIER ELEVATIONS		
ELEV.	PIER NO. 1	PIER NO. 2
Elev. X	1145.18	1147.41
Elev. Y	1142.22	1144.88
Top of Footing	1116.43	1116.05
Bottom of Footing	1111.93	1111.55

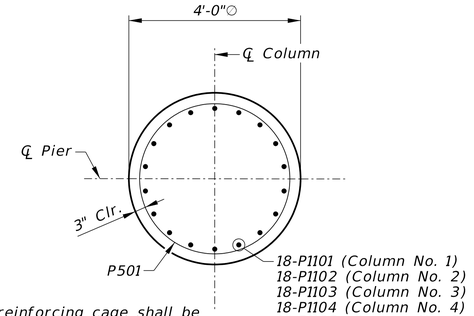

NOTE:

Column reinforcing cage shall be oriented with respect to ℄ Pier and ℄ Column as shown to avoid conflict with longitudinal cap reinforcing.

SECTION B/12

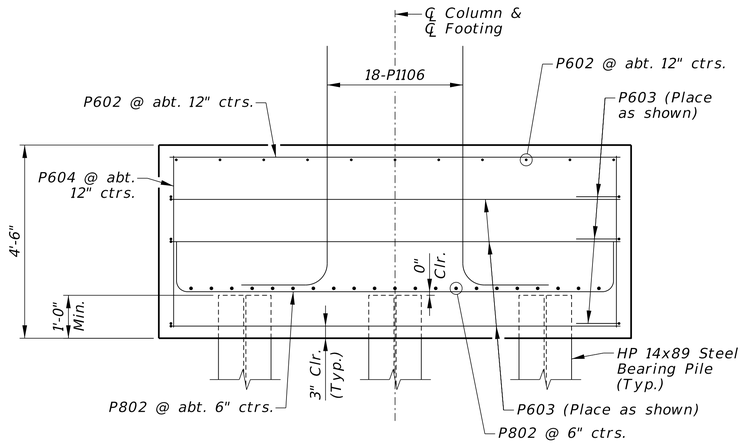

ELEVATION OF FOOTING

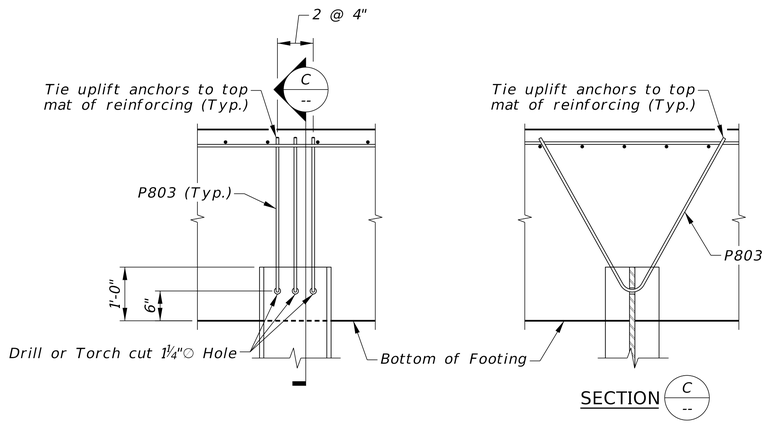

SECTION C/--

PILE UPLIFT ANCHOR DETAIL

NOTE:

The contractor shall hold P803 bars in position during construction such that the bars bear against the top of the holes placed in the pile.

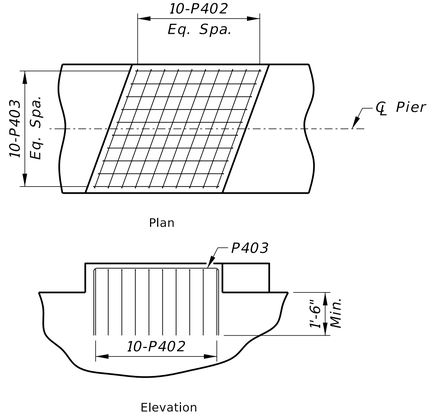

PEDESTAL REINFORCING

PRELIMINARY PLAN
NOT FINAL - SUBJECT TO CHANGE

HDR Engineering Inc.
1917 South 67th Street
Omaha, NE 68106
Office: 402-399-1000
Nebraska C.O.A. CA-0443

S13

PROJECT NUMBER
C-77 (25-15)

C.N.

LOCATION
SOUTH SARPY EXPRESSWAY

STRUCTURE NUMBER

360'-0" 3-SPAN PRESTRESSED CONCRETE GIRDER BRIDGE (NU1800)

PIER DETAILS

Q.C. ENGINEER: M. Wagner-Loos DATE MARCH 2026

DESIGNED BY: K. Devkota DETAILED BY: T. Sas

COUNTY SARPY
HWY. NO. ---
REF. POST. ---
STA. 11549+94.00
DESIGN CODE LRFD 9th Edition

SKEW Varies
ROADWAY 40'-0" WB/40'-0" EB
FHWA CONST. TYPE X081
DESIGN LIVE LOAD HL-93

SPECIAL PLAN NO. 1

13/31

Computer: 2MQ5130W92
Date: 13-FEB-2026 15:24
File: NDOT_2D_SP1.dgn

BILL OF BARS

PIER NO. 1

MARK	NUMBER OF BARS	LENGTH	TYPE	A	B	C	D	E	F	PIN Ø	HOOK	WEIGHT (LB)
P1101	18	27'-7"	STR.									2638
P1102	18	27'-0"	STR.									2582
P1103	18	26'-4"	STR.									2518
P1104	18	25'-9"	STR.									2463
P1105	18	25'-1"	STR.									2399
P1106	90	13'-0"	129	11'-0"						1'-0"	2'-0"	6216
P1001	14	106'-5"	STR.	Includes 1 - 6'-11" lap								6411
P901	14	28'-5"	STR.									1353
P902	14	46'-10"	104	4'-5"	42'-5"					9½"		2229
P903	14	42'-6"	STR.									2023
P801	40	6'-8"	STR.									712
P802	210	13'-2"	128	10'-6"						6"	1'-4"	7383
P803	60	8'-4"	136	4'-2"	3'-3"	3'-10"				6"		1335
P601	266	16'-0"	107	4'-6"	2'-10"					4½"	8"	6393
P602	110	10'-6"	STR.									1735
P603	60	11'-6"	129	10'-6"						4½"	1'-0"	1036
P604	200	4'-0"	STR.									1202
P501	116	14'-7"	116		3'-7"	11'-0"	3'-6"					1764
P502	14	4'-10"	128	3'-10"						2½"	6"	71
P503	10	103'-1"	STR.	Includes 1 - 3'-7" lap								1075
P401	100	4'-9"	128	4'-0"						2"	4½"	317
P402	90	8'-9"	103	2'-3"	4'-3"	2'-3"				2"		526
P403	90	8'-9"	103	2'-3"	4'-3"	2'-3"				2"		526
										TOTAL (LBS.) =		54907

BILL OF BARS

PIER NO. 2

MARK	NUMBER OF BARS	LENGTH	TYPE	A	B	C	D	E	F	PIN Ø	HOOK	WEIGHT (LB)
P1101	18	30'-3"	STR.									2893
P1102	18	29'-9"	STR.									2845
P1103	18	29'-2"	STR.									2789
P1104	18	28'-8"	STR.									2742
P1105	18	28'-1"	STR.									2686
P1106	90	13'-0"	129	11'-0"						1'-0"	2'-0"	6216
P1001	14	106'-5"	STR.	Includes 1 - 6'-11" lap								6411
P901	14	28'-5"	STR.									1353
P902	14	46'-10"	104	4'-5"	42'-5"					9½"		2229
P903	14	42'-6"	STR.									2023
P801	40	6'-8"	STR.									712
P802	210	13'-2"	128	10'-6"						6"	1'-4"	7383
P803	60	8'-4"	136	4'-2"	3'-3"	3'-10"				6"		1335
P601	266	16'-0"	107	4'-6"	2'-10"					4½"	8"	6393
P602	110	10'-6"	STR.									1735
P603	60	11'-6"	129	10'-6"						4½"	1'-0"	1036
P604	200	4'-0"	STR.									1202
P501	131	14'-7"	116		3'-7"	11'-0"	3'-6"					1993
P502	14	4'-10"	128	3'-10"						2½"	6"	71
P503	10	103'-1"	STR.	Includes 1 - 3'-7" lap								1075
P401	100	4'-9"	128	4'-0"						2"	4½"	317
P402	90	8'-9"	103	2'-3"	4'-3"	2'-3"				2"		526
P403	90	8'-9"	103	2'-3"	4'-3"	2'-3"				2"		526
										TOTAL (LBS.) =		56491

NOTE:

For pin diameters, hook lengths and bending diagrams, see Sheet 31.

S14

PROJECT NUMBER
C-77 (25-15)

C.N.

LOCATION
SOUTH SARPY EXPRESSWAY

STRUCTURE NUMBER

360'-0" 3-SPAN PRESTRESSED CONCRETE GIRDER BRIDGE (NU1800)

PIER DETAILS & BILL OF BARS

Q.C. ENGINEER: M. Wagner-Loos DATE MARCH 2026

DESIGNED BY: K. Devkota DETAILED BY: T. Sas

COUNTY SARPY
HWY. NO. ---
REF. POST. ---
STA. 11549+94.00
DESIGN CODE LRFD 9th Edition

SKEW Varies
ROADWAY 40'-0" WB/40'-0" EB
FHWA CONST. TYPE X081
DESIGN LIVE LOAD HL-93

PRELIMINARY PLAN
NOT FINAL - SUBJECT TO CHANGE

HDR Engineering Inc.
1917 South 67th Street
Omaha, NE 68106
Office: 402-399-1000
Nebraska C.O.A. CA-0443

SPECIAL PLAN NO. 1

14/31

Computer: 2MQ5130W92
Date: 13-FEB-2026 15:24
File: NDOT_2D_SP1.dgn

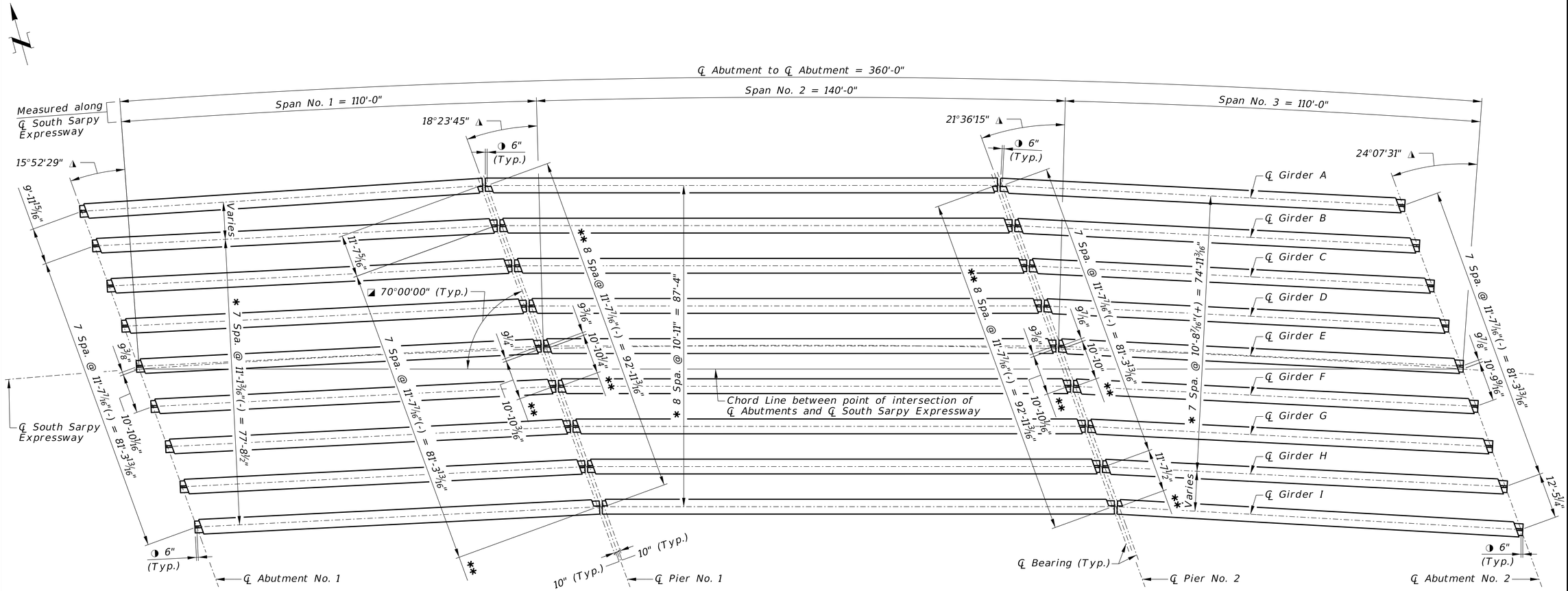

GIRDER LAYOUT

GIRDER CASTING LENGTHS			
Girder	*Span No. 1*	*Span No. 2*	*Span No. 3*
A	*109'-7 7/8"*	--	--
B - I	*110'-1 1/4"*	--	--
A - I	--	*139'-2 3/8"*	--
A - H	--	--	*110'-1"*
I	--	--	*110'-4 3/4"*

NOTES:

◪ *Measured to chord line. All ℄'s of piers and abutments are parallel.*

◮ *Measured to local tangent.*

* *Measured perpendicular to ℄ Girder.*

** *Measured along ℄ Bearing.*

◑ *Measured along ℄ Girder.*

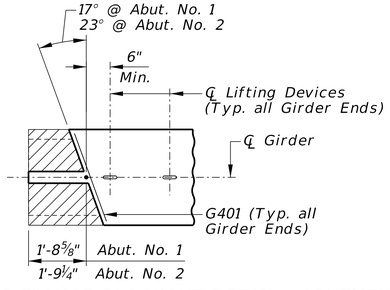

TOP FLANGE BLOCKOUT DETAIL - ABUTMENTS
Not to Scale

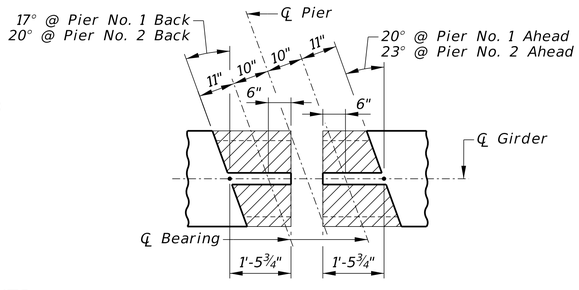

TOP FLANGE BLOCKOUT DETAIL - PIER INTERIOR GIRDER
Not to Scale

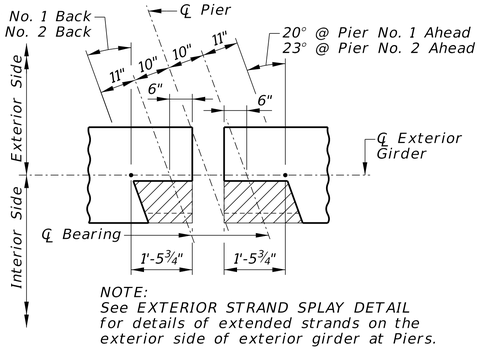

NOTE:
See EXTERIOR STRAND SPLAY DETAIL for details of extended strands on the exterior side of exterior girder at Piers.

TOP FLANGE BLOCKOUT DETAILS - PIER EXTERIOR GIRDER
Not to Scale

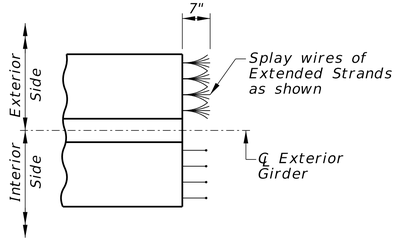

EXTERIOR STRAND SPLAY DETAIL
Showing Bottom Flange in Plan View

PRELIMINARY PLAN
NOT FINAL - SUBJECT TO CHANGE

HDR Engineering Inc.
1917 South 67th Street
Omaha, NE 68106
Office: 402-399-1000
Nebraska C.O.A. CA-0443

S15

PROJECT NUMBER C-77 (25-15)

C.N.

LOCATION
SOUTH SARPY EXPRESSWAY

STRUCTURE NUMBER

360'-0" 3-SPAN PRESTRESSED CONCRETE GIRDER BRIDGE (NU1800)

GIRDER LAYOUT

Q.C. ENGINEER: M. Wagner-Loos DATE MARCH 2026

DETAILED BY: T. Sas

DESIGNED BY: R. Paradis

SKEW Varies
ROADWAY 40'-0" WB/40'-0" EB
FHWA CONST. TYPE X081
DESIGN LIVE LOAD HL-93
DESIGN CODE LRFD 9th Edition
STA. 11549+94.00
REF. POST. ---
HWY. NO. ---
COUNTY SARPY

SPECIAL PLAN NO. 1

15/31

Computer: 2MQ5130W92
Date: 13-FEB-2026 15:24
File: NDOT_2D_SP1.dgn

NU 1800 GIRDER DESIGN

SPAN NO.	GIRDER CASTING LENGTH (FT.)	CONCRETE STRENGTH (KSI) AT RELEASE	CONCRETE STRENGTH (KSI) AT 28 DAYS	NO. OF STRANDS PER GIRDER	STRANDS PER ROW AT MIDSPAN R1	R2	R3	R4	R5	R6	NUMBER OF DEFLECTED STRANDS	STRAND CENTROID ENDS YE (IN.)	STRAND CENTROID MIDSPAN YM (IN.)	STRAND DEFLECTION AT ENDS YD (IN.)	DISTANCE BETWEEN HOLDDOWN POINTS X (FT.)
1 & 3	See Girder Layout on Sheet 15	6.0	8.0	32	14	8	6				4	10.75	3.37	59.02	22'-0"
2		6.0	8.5	46	14	12	8	4			8	13.83	4.26	55.09	27'-10"

NON-COMPOSITE PROPERTIES

GIRDER WEIGHT (LB/FT)	GIRDER AREA (IN²)	GIRDER CENTROID YNC (IN.)	MOMENT OF INERTIA (IN⁴)	MIDSPAN CAMBER (IN.) AT RELEASE	MIDSPAN CAMBER (IN.) AT 30 DAYS	DEFLECTION FOR SHIMS (IN.) (DUE TO SLAB AND RAIL) SPAN TENTH POINTS (SYM.) .1	.2	.3	.4	.5
894.5	858.7	32.06	612,674	See Table on Sheet 17		See Table on Sheet 17				

COMPOSITE PROPERTIES

SLAB 28 DAY STRENGTH (PSI)	SLAB DESIGN DEPTH (IN.)	MIDSPAN TRANSFORMED CONCRETE SECTION: SLAB EFFECTIVE WIDTH (IN.) (n x be)	SECTION AREA (IN²)	SECTION CENTROID YC (IN.)	MOMENT OF INERTIA (IN⁴)
4,000	7.50	102.15	1,625	52.13	1,350,009

NOTE:
◩ See Girder Layout Sheet for Blockout Details.

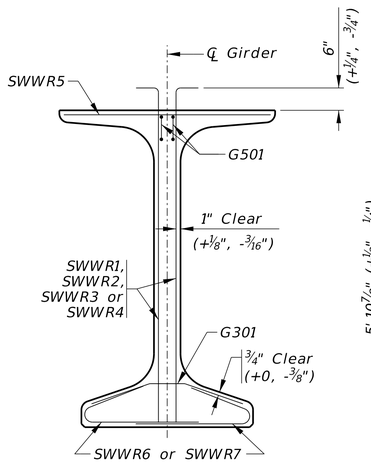

REINFORCING

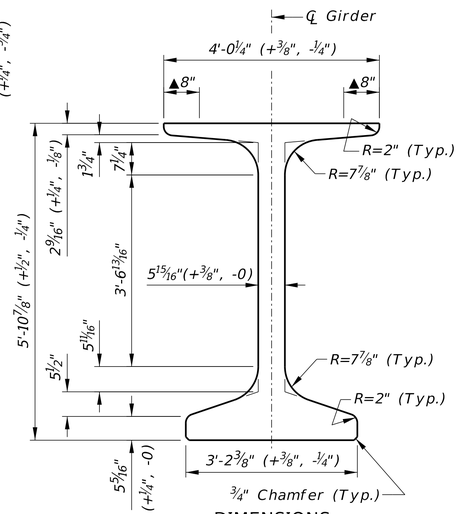

DIMENSIONS

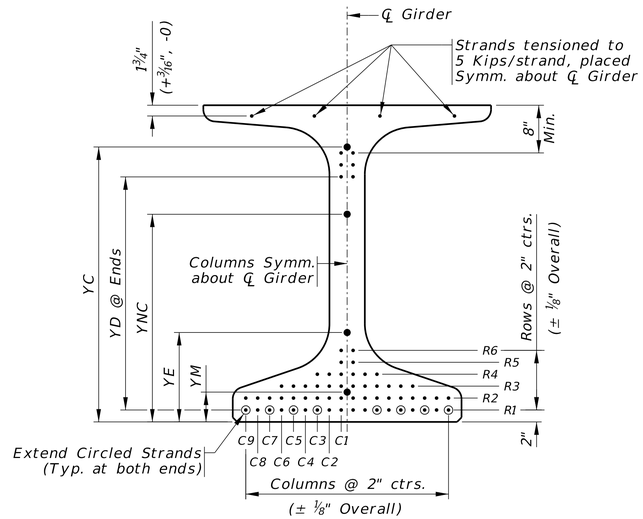

STRAND SPACINGS AND TOLERANCES
Not to Scale

◓ d=2" for D19 and smaller.
d=2½" for D20 and larger.

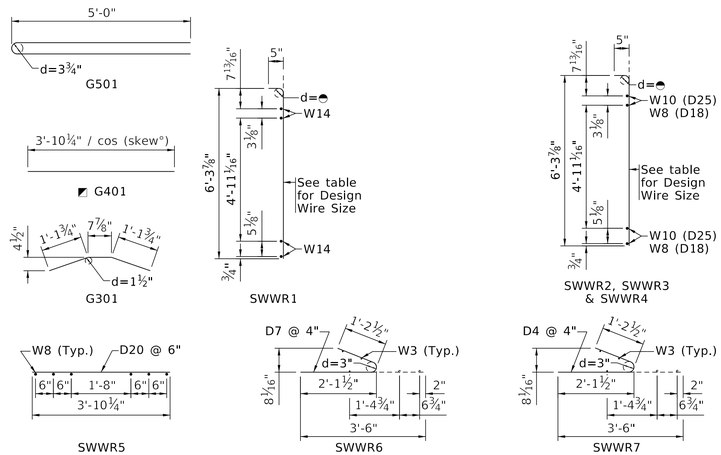

BENDING DIAGRAMS
Not to Scale

PRESTRESSED GIRDER NOTES:

FABRICATOR shall be responsible for exercising extreme care in lifting, handling, storing and transporting of the prestressed girders to prevent cracking or damage. Girders shall be maintained in an upright position and supported near the ends at all times. Proper support bearings shall be used to avoid twisting of the girders. Lifting devices and any other details designed by the Fabricator shall be shown on the shop plans.

PRESTRESSING STRAND shall be uncoated, seven-wire, low-relaxation steel strand of 0.6" nominal diameter and shall conform to the requirements of ASTM A416, Grade 270. Strands shall be tensioned to 43.94 kips before release, unless specified otherwise. All methods and procedures employed in tensioning the strands shall be subject to the Engineer's approval. The method chosen shall be executed in a manner to ensure that both ends of all strands in the girder are uniformly tensioned. The prestressed strand shall be released in a manner that will minimize eccenctricity.

CONCRETE for the girders shall have the strength at release and at 28 days (design strength) as shown in the data table. No bond stress shall be transferred to the concrete nor the end anchorage released until the concrete has attained the specified strength. All exposed edges of girders, except at top and ends, shall be chamfered ¾".

▲ GIRDER TOP FLANGE shall be steel troweled to a smooth finish for 8" at the edges, as shown. Bond breaker shall be applied to this region only. The center portion shall be rough finished by scarifying the surface transversely with a wire brush. No laitance shall remain on the surface. Bond breaker shall be Silicoseal, manufactured by Nox-Crete, Clean Lift 20/20 manufactured by SpecChem, or an approved equal.

REINFORCING STEEL shall conform to the requirements of ASTM designation A615, Grade 60. Steel Welded Wire Reinforcement, deformed, for concrete shall conform to ASTM A1064 or AASHTO M336 with a minimum yield strength of 70 ksi.

BEARING PLATES shall conform to the requirements of ASTM A709, Grade 36 or Grade 50W weathering steel. The Grade 36 steel shall be galvanized according to the requirements of ASTM A123.

DIMENSIONAL TOLERANCES shall be in accordance with the Prestressed Concrete Institute Manual for Quality Control, MNL-116-99, 4th Edition.

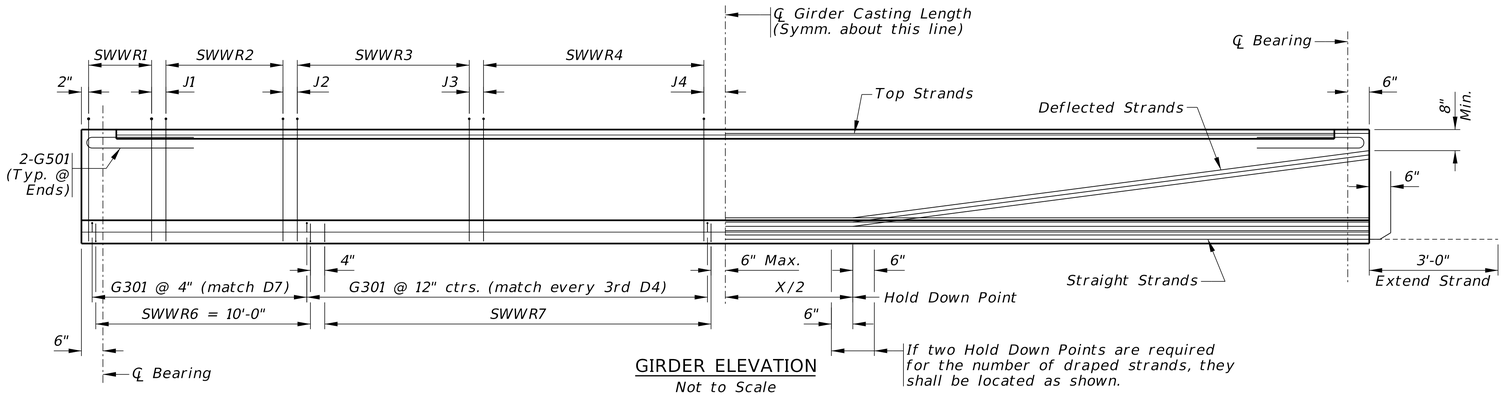

GIRDER ELEVATION
Not to Scale

STEEL WELDED WIRE REINFORCEMENT

SPAN NO.	SWWR1 WIRE SIZE	S1	L1	J1	SWWR2 WIRE SIZE	S2	L2	J2	SWWR3 WIRE SIZE	S3	L3	J3	SWWR4 WIRE SIZE	S4	L4	J4
1 & 3	D31	2"	3'-0"	3"	D25	3"	11'-0"	4"	D18	4"	18'-0"	6"	D18	1'-0"	21'-0"	**
2	D31	2"	3'-0"	3"	D25	3"	15'-0"	6"	D18	6"	10'-0"	6"	D18	1'-0"	40'-0"	2⅛"

NOTES:
SWWR5, SWWR6, & SWWR7 as shown in Bending Diagrams.
** See Table on Sheet 17.

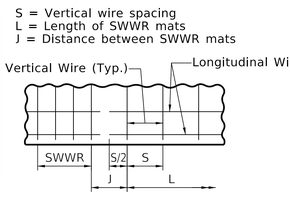

FABRIC PLACEMENT DETAIL
Not to Scale

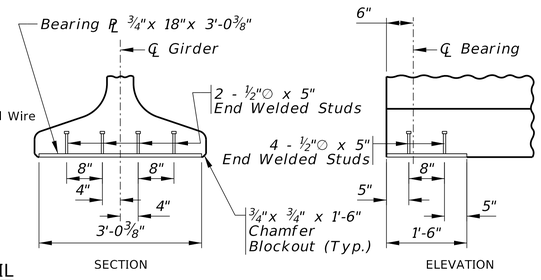

BEARING PLATE DETAILS

PRELIMINARY PLAN
NOT FINAL - SUBJECT TO CHANGE

HDR Engineering Inc.
1917 South 67th Street
Omaha, NE 68106
Office: 402-399-1000
Nebraska C.O.A. CA-0443

S16

PROJECT NUMBER C-77 (25-15)

C.N.

LOCATION
SOUTH SARPY EXPRESSWAY

STRUCTURE NUMBER

360'-0" 3-SPAN PRESTRESSED CONCRETE GIRDER BRIDGE (NU1800)

NU 1800 GIRDER DETAILS

Q.C. ENGINEER: K. Devkota DATE MARCH 2026

DESIGNED BY: M. Wagner-Loos DETAILED BY: T. Sas CHECKED BY:

DESIGN CODE LRFD 9th Edition
STA. 11549+94.00
REF. POST. ---
HWY. NO. ---
COUNTY SARPY

SKEW Varies
ROADWAY 40'-0" WB/40'-0" EB
FHWA CONST. TYPE X081
DESIGN LIVE LOAD HL-93

SPECIAL PLAN NO. 1

16/31

Computer: 2NQ5130W92
Date: 13-FEB-2026 15:24
File: NDOT_2D_SP1.dgn

DIMENSIONS FOR BEARING DEVICES									
LOCATION	SOLE PLATE				STAINLESS STEEL		FABRIC PAD		
	A	B	C	D	E	F	G	H	J
Abutment No. 1	*1 7/16"*	*1 9/16"*	*1'-0"*	*3'-4"*	*11"*	*3'-0 3/4"*	*1"*	*4"*	*3'-0"*
Pier No. 1 (Back)	*1 1/2"*	*1 1/2"*	*1'-0"*	*3'-4"*	--	--	*1"*	*4"*	*3'-0"*
Pier No. 1 (Ahead)	*1 3/8"*	*1 5/8"*	*1'-0"*	*3'-4"*	--	--	*1"*	*4"*	*3'-0"*
Pier No. 2 (Back)	*1 7/16"*	*1 9/16"*	*1'-0"*	*3'-4"*	--	--	*1"*	*4"*	*3'-0"*
Pier No. 2 (Ahead)	*1 5/16"*	*1 11/16"*	*1'-0"*	*3'-4"*	--	--	*1"*	*4"*	*3'-0"*
Abutment No. 2	*1 3/8"*	*1 5/8"*	*1'-0"*	*3'-4"*	*11"*	*3'-0 3/4"*	*1"*	*4"*	*3'-0"*

DEFLECTION FOR SHIMS (IN.) (DUE TO SLAB AND RAIL)										
GIRDER	SPANS 1 & 3					SPAN 2				
	SPAN TENTH POINTS (SYM.)					SPAN TENTH POINTS (SYM.)				
	0.1	0.2	0.3	0.4	0.5	0.1	0.2	0.3	0.4	0.5
A & I	*0.43*	*0.76*	*1.00*	*1.14*	*1.19*	*1.06*	*1.89*	*2.48*	*2.83*	*2.95*
B - H	*0.50*	*0.90*	*1.18*	*1.34*	*1.40*	*1.26*	*2.24*	*2.95*	*3.37*	*3.51*

MIDSPAN CMABER (IN.)		
SPAN	AT RELEASE	AT 30 DAYS
1 & 3	*1.59*	*2.81*
2	*2.97*	*5.22*

STEEL WELDED WIRE REINFORCEMENT J4 SPACING		
SPAN	GIRDER	J4 (IN.)
1	*A*	*7 5/8"*
1	*B - I*	*9 5/8"*
3	*A - H*	*9 5/8"*
3	*I*	*11 3/8"*

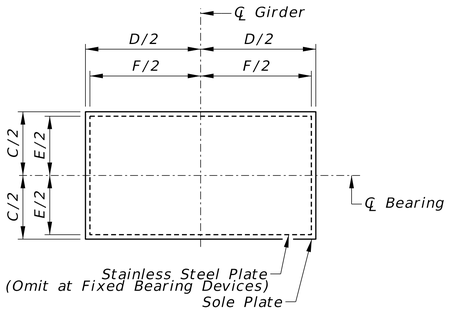

SOLE PLATE
Not to Scale

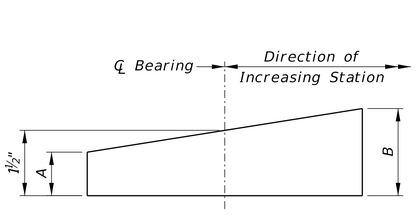

SECTION OF BEVELED SOLE PLATE
Not to Scale

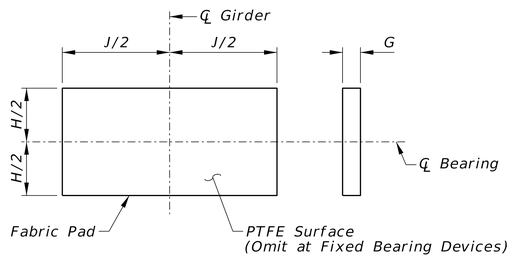

FABRIC PAD
Not to Scale

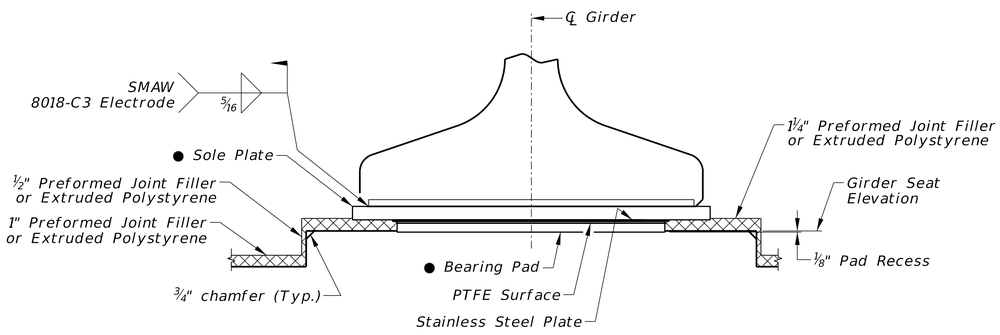

SECTION AT EXPANSION BEARING (PTFE TYPE)
AT ABUTMENTS
Not to Scale

● *Sole Plates and Fabric Pads need to be inspected prior to installation. Please notify the Engineer a minimum of three weeks before contractor's scheduled installation for inspection.*

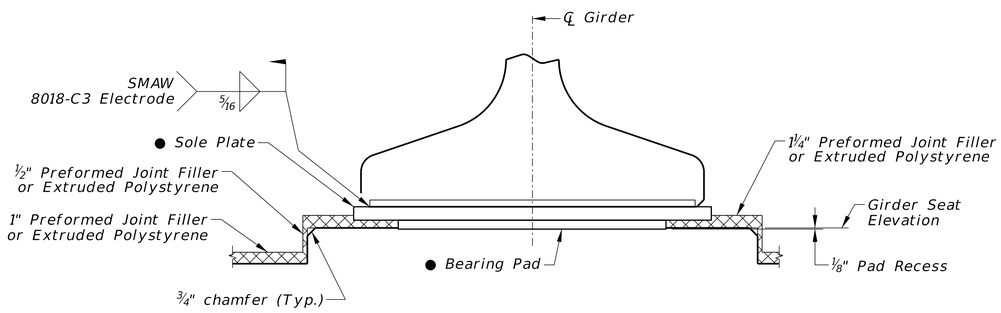

SECTION AT FIXED BEARING
AT PIERS
Not to Scale

PRELIMINARY PLAN
NOT FINAL - SUBJECT TO CHANGE

HDR Engineering Inc.
1917 South 67th Street
Omaha, NE 68106
Office: 402-399-1000
Nebraska C.O.A. CA-0443

S17

PROJECT NUMBER
C-77 (25-15)

C.N.

LOCATION
SOUTH SARPY EXPRESSWAY

STRUCTURE NUMBER

360'-0" 3-SPAN PRESTRESSED CONCRETE GIRDER BRIDGE (NU1800)
GIRDER & BEARING DETAILS

Q.C. ENGINEER: *K. Devkota* DATE *MARCH 2026*

DESIGNED BY: *M. Wagner-Loos* DETAILED BY: *T. Sas*

COUNTY *SARPY*
HWY. NO. ---
REF. POST. ---
STA. *11549+94.00*
DESIGN CODE *LRFD 9th Edition*

SKEW *Varies*
ROADWAY *40'-0" WB/40'-0" EB*
FHWA CONST. TYPE *X081*
DESIGN LIVE LOAD *HL-93*

SPECIAL PLAN NO. *1*

17 / *31*

Computer: 2M05130W92
Date: 13-FEB-2026 15:24
File: NDOT_2D_SP1.dgn

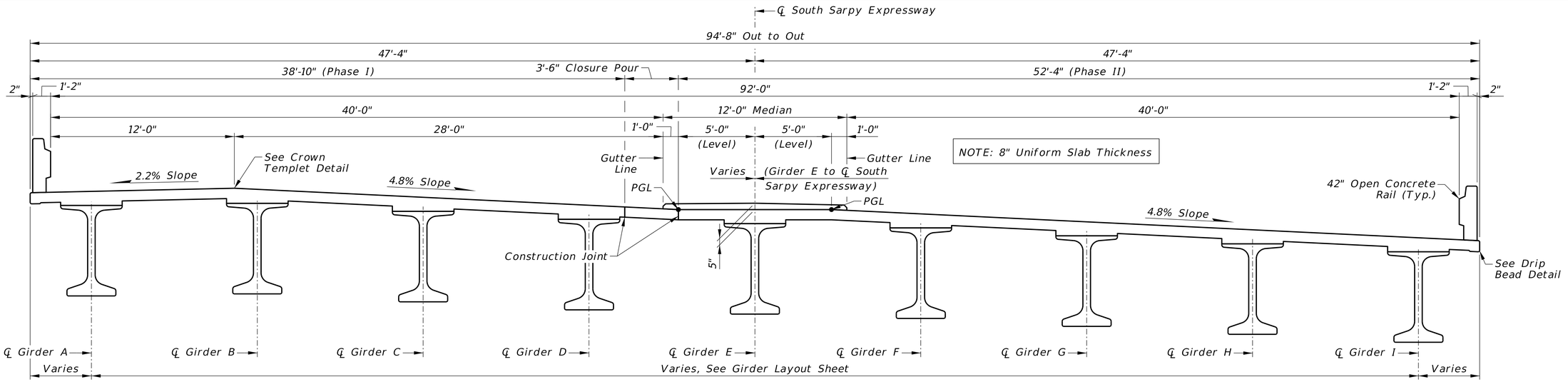

TYPICAL SECTION

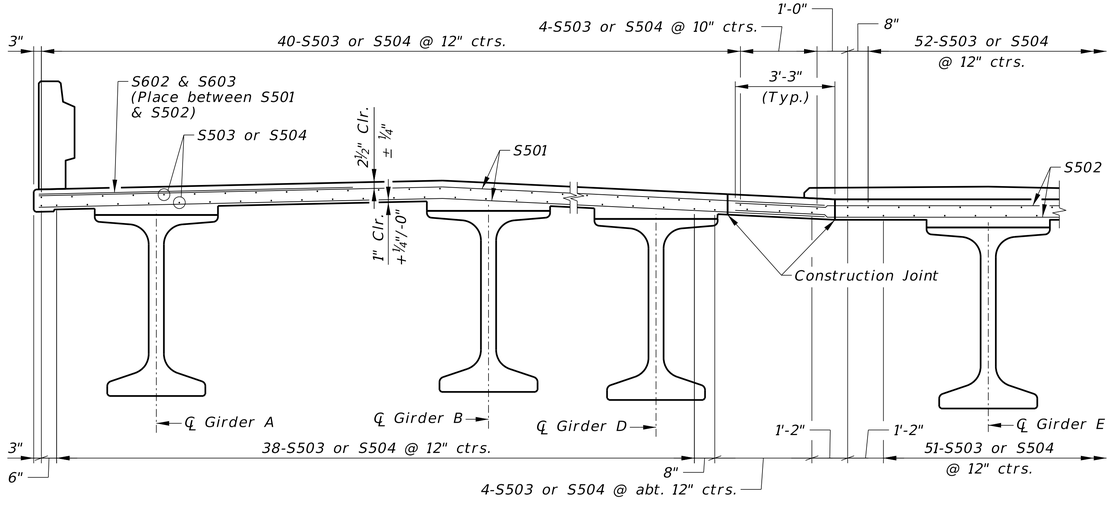

PART SECTION NEAR MIDSPAN

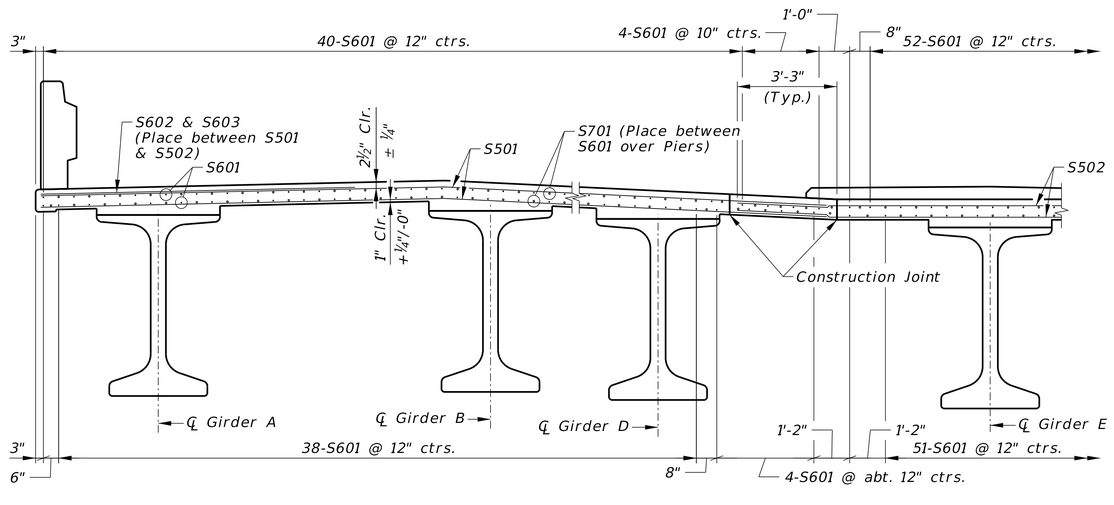

PART SECTION NEAR PIER

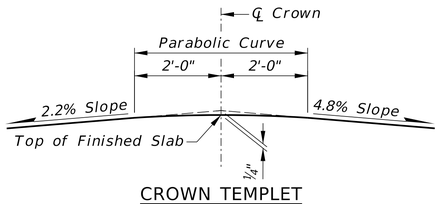

CROWN TEMPLET
Not to Scale

TOP OF SLAB TO TOP OF GIRDER (IN.)				
GIRDERS	℄ BRG. ABUT. NO. 1	℄ PIER NO. 1	℄ PIER NO. 2	℄ BRG. ABUT. NO. 2
A	10"	1'-1½"	1'-1½"	11"
B-D, F-H	11"	1'-2½"	1'-2½"	1'-0"
E	9½"	1'-0¾"	1'-0¾"	10½"
I	11"	1'-3"	1'-3"	1'-0"

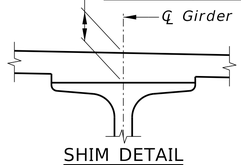

SHIM DETAIL
Not to Scale

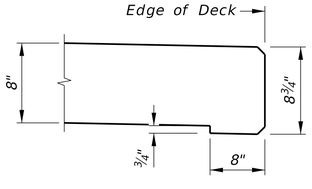

DRIP BEAD DETAIL
Not to Scale

NOTES:

See Sheet 22 for Median Details.

See Sheet 29 for Concrete Rail Details.

PRELIMINARY PLAN
NOT FINAL - SUBJECT TO CHANGE

HDR Engineering Inc.
1917 South 67th Street
Omaha, NE 68106
Office: 402-399-1000
Nebraska C.O.A. CA-0443

S18

PROJECT NUMBER
C-77 (25-15)

C.N.

LOCATION
SOUTH SARPY EXPRESSWAY

STRUCTURE NUMBER

TYPICAL SECTION
360'-0" 3-SPAN PRESTRESSED CONCRETE GIRDER BRIDGE (NU1800)

Q.C. ENGINEER: K. Devkota DATE MARCH 2026

DESIGNED BY: M. Wagner-Loos DETAILED BY: T. Sas

COUNTY SARPY
HWY. NO. ---
REF. POST. ---
STA. 11549+94.00
DESIGN CODE LRFD 9th Edition
SKEW Varies
ROADWAY 40'-0" WB/40'-0" EB
FHWA CONST. TYPE X081
DESIGN LIVE LOAD HL-93

SPECIAL PLAN NO. 1

18/31

Computer: 2MQ5130W92
Date: 13-FEB-2026 15:24
File: NDOT_2D_SP1.dgn

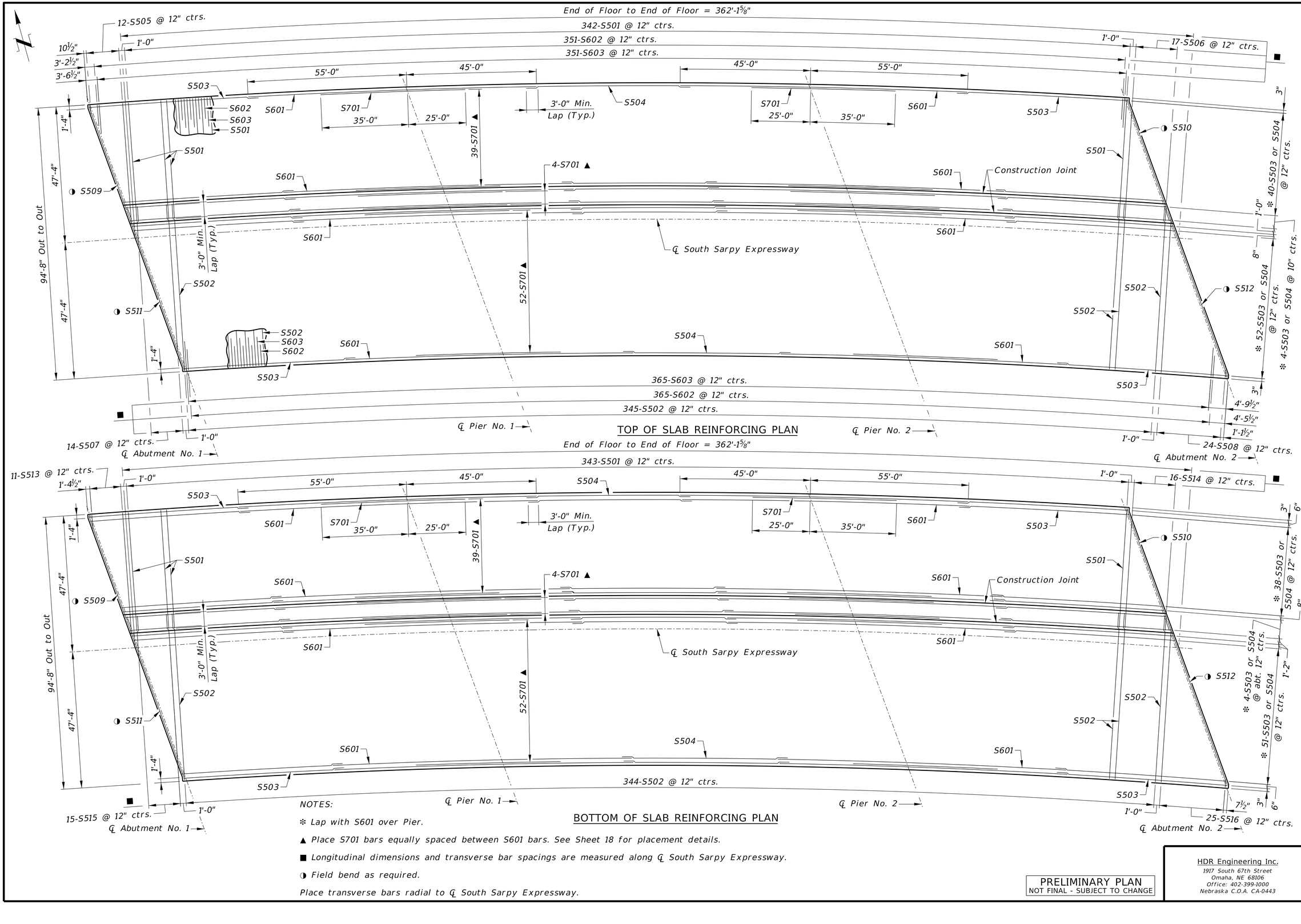

NOTES:

※ Lap with S601 over Pier.

▲ Place S701 bars equally spaced between S601 bars. See Sheet 18 for placement details.

■ Longitudinal dimensions and transverse bar spacings are measured along ℄ South Sarpy Expressway.

◑ Field bend as required.

Place transverse bars radial to ℄ South Sarpy Expressway.

PRELIMINARY PLAN
NOT FINAL - SUBJECT TO CHANGE

HDR Engineering Inc.
1917 South 67th Street
Omaha, NE 68106
Office: 402-399-1000
Nebraska C.O.A. CA-0443

S19

PROJECT NUMBER
C-77 (25-15)

C.N.

LOCATION
SOUTH SARPY EXPRESSWAY

STRUCTURE NUMBER

360'-0" 3-SPAN PRESTRESSED CONCRETE GIRDER BRIDGE (NU1800)

SLAB REINFORCING LAYOUT

SKEW Varies
ROADWAY 40'-0" WB/40'-0" EB
FHWA CONST. TYPE X081
DESIGN LIVE LOAD HL-93
DESIGN CODE LRFD 9th Edition

COUNTY SARPY
HWY. NO. ---
REF. POST. ---
STA. 11549+94.00

Q.C. ENGINEER: K. Devkota
DATE MARCH 2026

DESIGNED BY: M. Wagner-Loos
DETAILED BY: T. Sas

SPECIAL PLAN NO. 1

19 / 31

Computer: 2MQ5130W92
Date: 13-FEB-2026 15:24
File: NDOT_2D_SP1.dgn

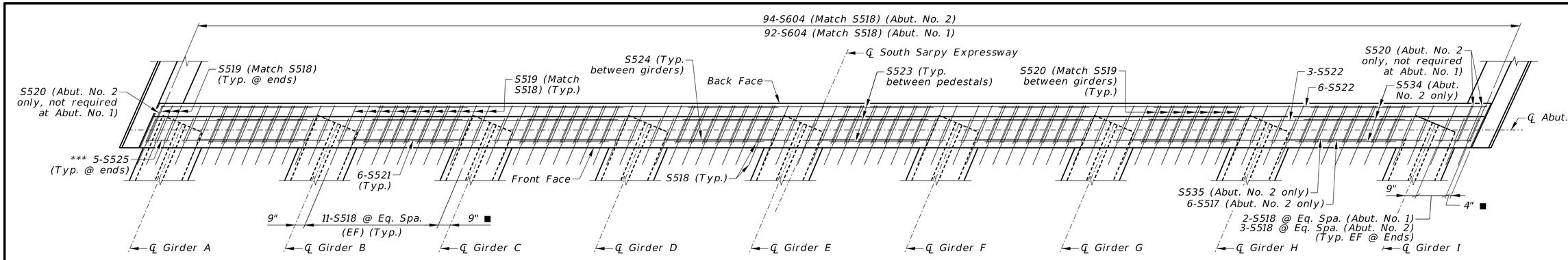

PLAN OF TURNDOWN AT ABUTMENTS

(Showing Abutment No. 2, Abutment No. 1 similiar UNO)
(Shown at top of wing)

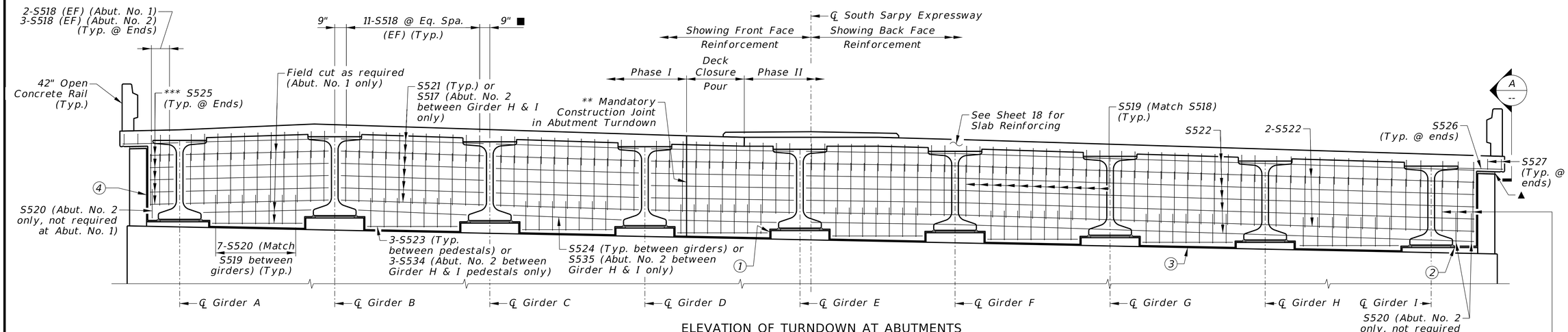

ELEVATION OF TURNDOWN AT ABUTMENTS

(Showing Abutment No. 2, Abutment No. 1 similiar UNO)

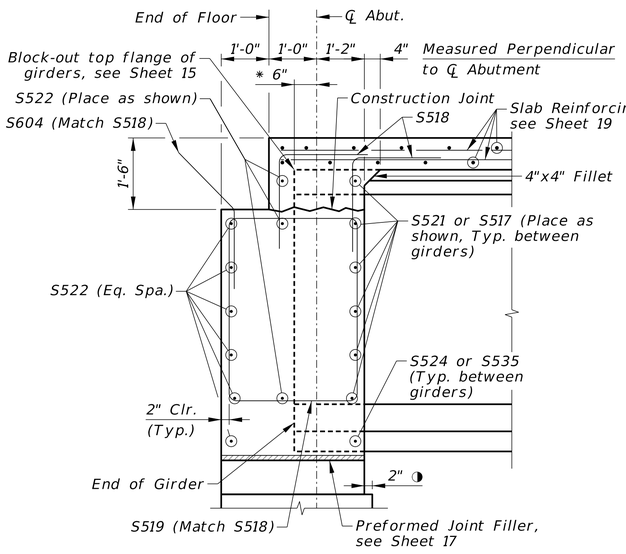

SECTION AT PEDESTALS

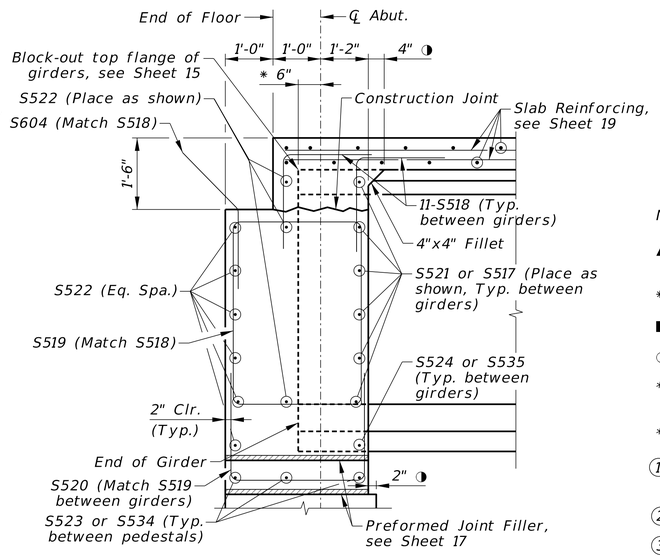

SECTION BETWEEN PEDESTALS

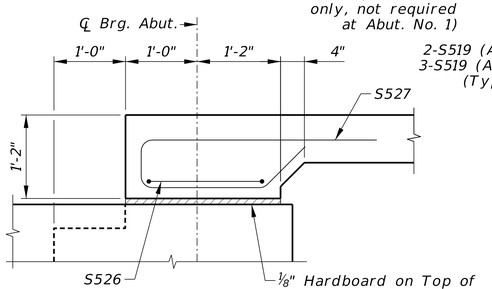

SECTION A-A

NOTES:

▲ ⅛" Hardboard on Top of 2" Extruded Polystrene (Subsidiary).

* Measured along ℄ of Girder.

■ Measured along ℄ Abut.

◑ Measured perpendicular to ℄ Abutment.

** The Abutment Turndown within the Phase II and Closure Pour regions shall be placed after the Phase I deck, and before the Phase II deck.

*** Trim bars as necessary to maintain clearance from face of concrete.

① ½" Preformed Joint Filler or Extruded Polystyrene Typical on Pedestal Vertical Faces.

② 1¼" Preformed Joint Filler or Extruded Polystyrene (Typ.).

③ 1" Preformed Joint Filler or Extruded Polystyrene (Typ.).

④ 1" Preformed Joint Filler (Sponge Rubber Type) (Typ. between Wing and Turndown for full width of Turndown).

PRELIMINARY PLAN
NOT FINAL - SUBJECT TO CHANGE

HDR Engineering Inc.
1917 South 67th Street
Omaha, NE 68106
Office: 402-399-1000
Nebraska C.O.A. CA-0443

S20

PROJECT NUMBER
C-77 (25-15)

C.N.

LOCATION
SOUTH SARPY EXPRESSWAY

STRUCTURE NUMBER

360'-0" 3-SPAN PRESTRESSED CONCRETE GIRDER BRIDGE (NU1800)

ABUTMENT TURNDOWN DETAILS

SKEW Varies
ROADWAY 40'-0" WB/40'-0" EB
FHWA CONST. TYPE X081
DESIGN LIVE LOAD HL-93
DESIGN CODE LRFD 9th Edition
STA. 11549+94.00
REF. POST. ---
HWY. NO. ---
COUNTY SARPY

DESIGNED BY: M. Wagner-Loos DETAILED BY: T. Sas Q.C. ENGINEER: K. Devkota DATE MARCH 2026

SPECIAL PLAN NO. 1

20/31

Computer: 2MQ5130W92
Date: 13-FEB-2026 15:24
File: NDOT_2D_SP1.dgn

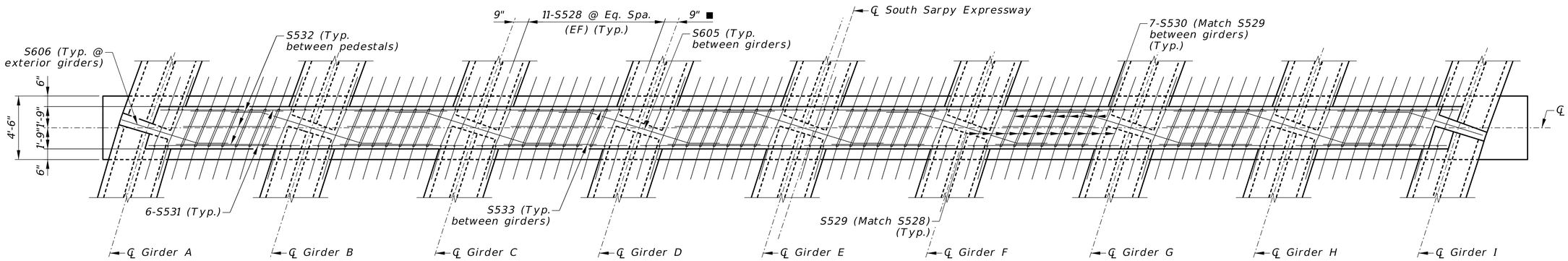

PLAN OF DIAPHRAGM AT PIERS

(Showing Pier No. 1, Pier No. 2 similiar)
(Pier dowel bars not shown for clarity)

NOTE:
Slab reinforcing not shown for clarity.

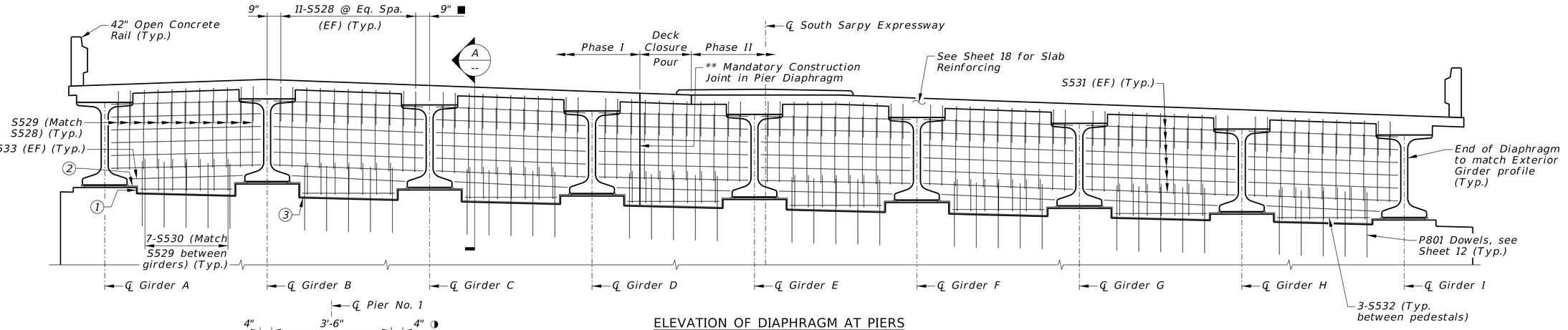

ELEVATION OF DIAPHRAGM AT PIERS

(Showing Pier No. 1, Pier No. 2 similiar)

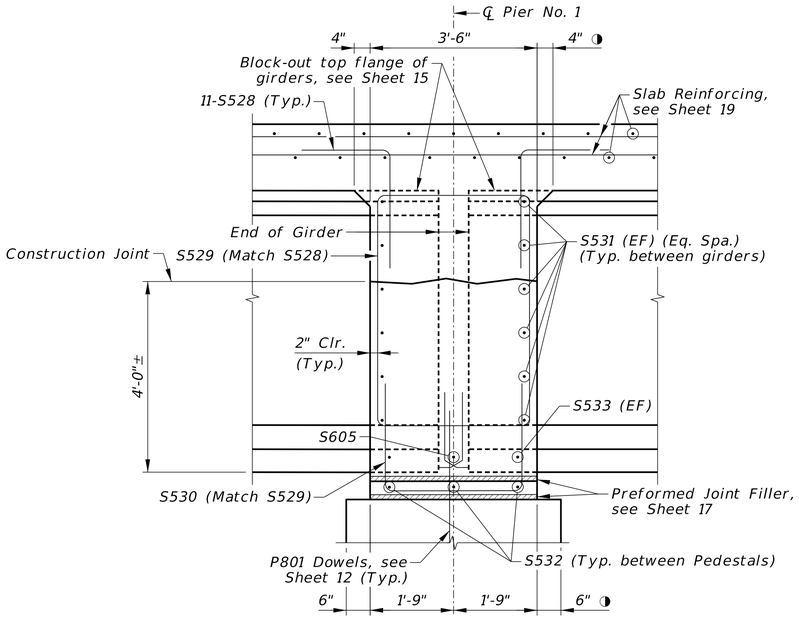

SECTION A

NOTES:

(EF) Each Face

For Joint Filler Details on Top of Pier Cap and at Pedestals, see Bearing Details on Sheet 17.

■ *Measured along ℄ Pier.*

◑ *Measured perpendicular to ℄ Pier.*

*** The Pier Diaphragm within the Phase II and Closure Pour regions shall be placed after the Phase I deck, and before the Phase II deck.*

① *½" Preformed Joint Filler or Extruded Polystyrene Typical on Vertical Faces.*

② *1¼" Preformed Joint Filler or Extruded Polystyrene (Typ.).*

③ *1" Preformed Joint Filler or Extruded Polystyrene (Typ.).*

PRELIMINARY PLAN
NOT FINAL - SUBJECT TO CHANGE

HDR Engineering Inc.
1917 South 67th Street
Omaha, NE 68106
Office: 402-399-1000
Nebraska C.O.A. CA-0443

S21

PROJECT NUMBER
C-77 (25-15)

C.N.

LOCATION
SOUTH SARPY EXPRESSWAY

STRUCTURE NUMBER

360'-0" 3-SPAN PRESTRESSED CONCRETE GIRDER BRIDGE (NU1800)

PIER DIAPHRAGM DETAILS

SKEW *Varies* ROADWAY *40'-0" WB/40'-0" EB* FHWA CONST. TYPE *X081* DESIGN LIVE LOAD *HL-93*
DESIGN CODE *LRFD 9th Edition*
STA. *11549+94.00* REF. POST. *---* HWY. NO. *---* COUNTY *SARPY*

Q.C. ENGINEER: *K. Devkota* DATE *MARCH 2026*
DESIGNED BY: *M. Wagner-Loos* DETAILED BY: *T. Sas*

SPECIAL PLAN NO. *1*
21 / *31*

Computer: 2MQ5130W92
Date: 13-FEB-2026 15:24
File: NDOT_2D_SP1.dgn

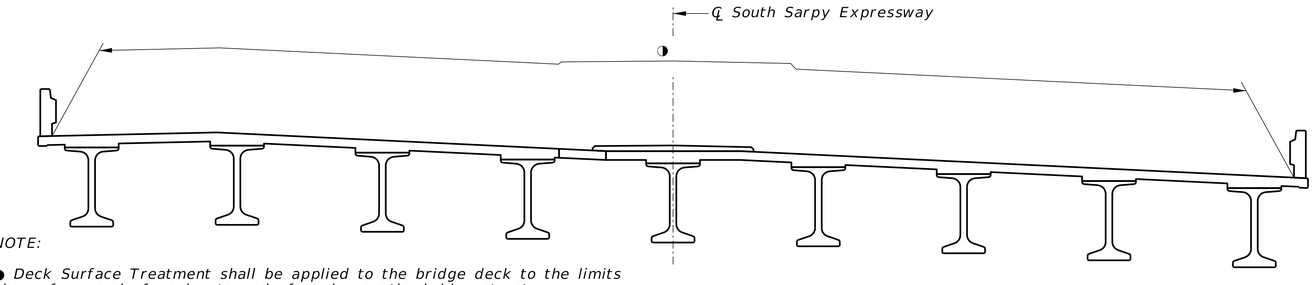

NOTE:

◑ Deck Surface Treatment shall be applied to the bridge deck to the limits shown from end of paving to end of paving on the bridge structure.

LIMITS OF DECK SURFACE TREATMENT

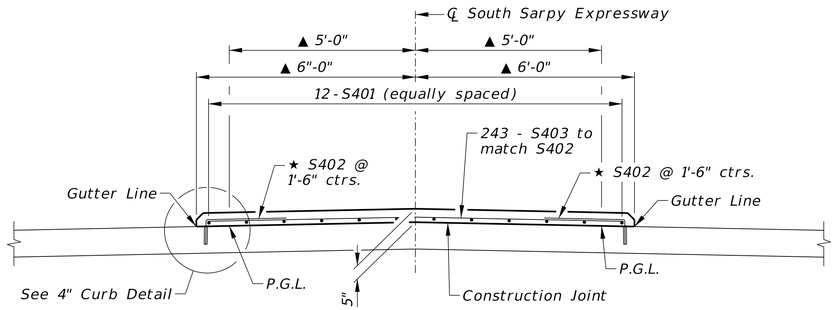

PROVIDE 2" COVER FOR ALL MEDIAN REINFORCEMENT

P.G.L.= Profile Grade Line

★ Drill hole into existing concrete, and fill with an approved resin adhesive prior to inserting bar. See Special Provisions. Follow resin manufacturer's recommendations for hole depth and diameter. Bar length based on a 6" deep hole.

▲ Measured perpendicular to ℄ South Sarpy Expressway.

MEDIAN SECTION

Not to Scale

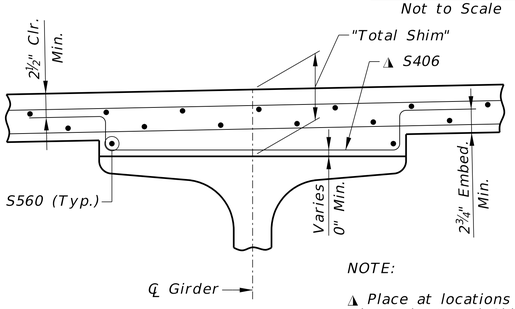

NOTE:

◭ Place at locations along the girder where the "Total Shim" (top of slab to top of girder) exceeds 11¼".

HAT BAR DETAIL

Not to Scale

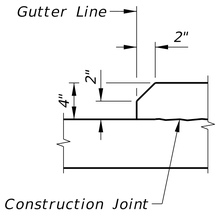

4" CURB DETAIL

Not to Scale

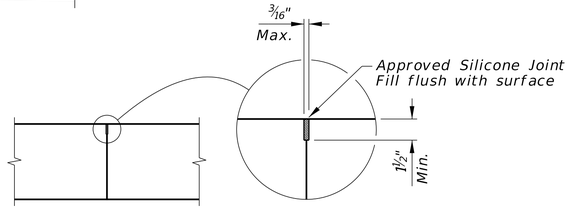

NOTES:

The Contractor shall prepare and seal the joint according to the manufacturer's recommendations.

Before sealing, the joint wall surfaces shall be sandblasted to remove any loose particles and concrete dust.

After sandblasting, the entire joint shall be cleaned with compressed air having a minimum pressure of 90 psi. The compressed air shall be free of any contaminants.

The joint shall be dry at the time of sealing.

SLAB CONSTRUCTION JOINT

Not to Scale

BILL OF BARS

CONCRETE RAIL ON BRIDGE

MARK	NUMBER OF BARS	LENGTH	TYPE	A	B	C	D	E	F	PIN Ø	HOOK	WEIGHT (LB)
S690	568	5'-10"	104	2'-11"	2'-11"					4½"		4977
S691	660	6'-4"	104	3'-2"	3'-2"					4½"		6278
S692	20	377'-9"	STR.	(Includes 6 - 2'-6" Laps)								11348
S490	24	7'-9"	130	2'-7½"	6½"	3'-0"	5"	5"	4½"	2"	4½"	124
S491	528	4'-9"	130	1'-1½"	6½"	1'-6"	5"	5"	4½"	2"	4½"	1675
S492	2900	4'-7"	107	1'-1"	10"					2"	4½"	8879
S493	1450	4'-4"	131	2'-0"	4"	2'-0"	3"			2"		4197
S391	56	9"	STR.									16
S392	8	5'-2"	STR.									16
											TOTAL (LB) =	37510

BILL OF BARS

SLAB

MARK	NUMBER OF BARS	LENGTH	TYPE	A	B	C	D	E	F	PIN Ø	HOOK	WEIGHT (LB)
S701	380	60'-0"	STR.									46603
S601	386	103'-7"	STR.	Includes 1 - 3'-7" lap								60055
S602	716	7'-6"	STR.									8066
S603	716	10'-3"	STR.									11023
S604	186	3'-4"	105	1'-8"	1'-8"	1'-2"				4½"		931
S605	14	13'-11"	117	8'-3"	2'-10"	7'-9"	2'-10"			4½"		293
S606	4	8'-11"	101	6'-1"	2'-10"	11¾"				4½"		54
S501	685	41'-10"	STR.									29888
S502	689	55'-4"	STR.									39764
S503	386	59'-4"	STR.									23887
S504	193	56'-5"	STR.									11357
S505	12	22'-7" Avg.	STR.									283
S506	17	21'-7" Avg.	STR.									383
S507	14	30'-1" Avg.	STR.									439
S508	24	28'-1" Avg.	STR.									703
S509	2	43'-5"	STR.									91
S510	2	45'-7"	STR.									95
S511	2	57'-6"	STR.									120
S512	2	63'-8"	STR.	Includes 1 - 3'-0" lap								133
S513	11	23'-2" Avg.	STR.									266
S514	16	21'-7" Avg.	STR.									360
S515	15	30'-1" Avg.	STR.									471
S516	25	28'-1" Avg.	STR.									732
S517	6	11'-8"	STR.									73
S518	372	6'-2"	104	3'-1"	3'-1"					3¾"		2393
S519	186	14'-1"	107	3'-7"	3'-0"					2½"	5½"	2732
S520	115	11'-6"	103	4'-3"	3'-0"	4'-3"				2½"		1379
S521	90	10'-11"	STR.									1025
S522	18	102'-9"	STR.	Includes 1 - 3'-1" lap								1929
S523	45	6'-6"	STR.									305
S524	15	8'-0"	STR.									125
S525	20	3'-0"	STR.									63
S526	4	8'-0"	103	3'-3"	1'-6"	3'-3"				2½"		33
S527	8	6'-9"	102	1'-8"	8"	3'-9"	8"	6"		2½"		56
S528	352	6'-2"	104	3'-1"	3'-1"					3¾"		2264
S529	176	16'-5"	107	4'-5"	3'-4"					2½"	5½"	3014
S530	112	12'-0"	103	4'-4"	3'-4"	4'-4"				2½"		1402
S531	192	10'-10"	STR.									2169
S532	48	6'-6"	STR.									325
S533	32	8'-0"	STR.									267
S534	3	7'-3"	STR.									23
S535	1	8'-9"	STR.									9
S550	16	3'-0"	STR.									50
S560	18	378'-3"	STR.	Includes 6 - 3'-0" laps								7101
S401	12	373'-3"	STR.	Includes 6 - 1'-11" laps								2992
S402	486	2'-8"	104	2'-0"	8"					3"		866
S403	243	11'-8"	STR.									1894
S406	3754	5'-7"	109	7"	3'-8"	4½"				2"		14001
											TOTAL (LB) =	282487

BAR SETS

MARK	MAX. LENGTH	MIN. LENGTH	NO. OF SETS	BARS PER SET
S505	41'-10"	3'-4"	1	12
S506	39'-10"	3'-3"	1	17
S507	52'-6"	7'-7"	1	14
S508	53'-4"	2'-10"	1	24
S513	41'-1"	5'-2"	1	11
S514	38'-8"	4'-5"	1	16
S515	54'-3"	5'-10"	1	15
S516	54'-5"	1'-9"	1	25

NOTE:

For pin dimensions, hook lengths and bending diagrams, see Sheet 31.

PRELIMINARY PLAN
NOT FINAL - SUBJECT TO CHANGE

HDR Engineering Inc.
1917 South 67th Street
Omaha, NE 68106
Office: 402-399-1000
Nebraska C.O.A. CA-0443

S22

PROJECT NUMBER C-77 (25-15)

C.N.

LOCATION
SOUTH SARPY EXPRESSWAY

STRUCTURE NUMBER

360'-0" 3-SPAN PRESTRESSED CONCRETE GIRDER BRIDGE (NU1800)

SLAB DETAILS & BILL OF BARS

Q.C. ENGINEER: K. Devkota DATE MARCH 2026

DESIGNED BY: M. Wagner-Loos DETAILED BY: T. Sas

SKEW Varies ROADWAY 40'-0" WB/40'-0" EB

COUNTY SARPY HWY. NO. --- REF. POST: --- STA. 11549+94.00

FHWA CONST. TYPE X081 DESIGN LIVE LOAD HL-93 DESIGN CODE LRFD 9th Edition

SPECIAL PLAN NO. 1

22/31

Computer: 2MQ5130W92 Date: 13-FEB-2026 15:24 File: NDOT_2D_SP1.dgn

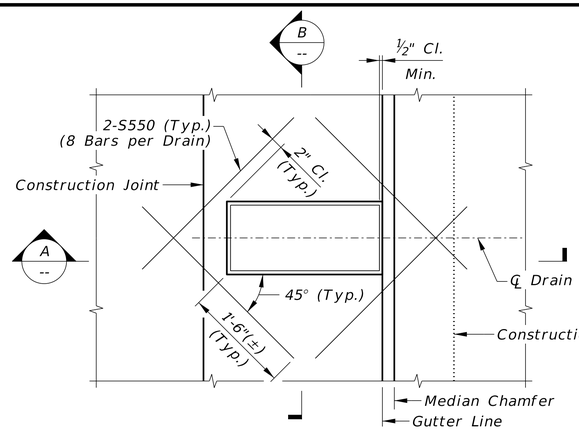

PART PLAN AT DRAIN

(Detail B Shown)

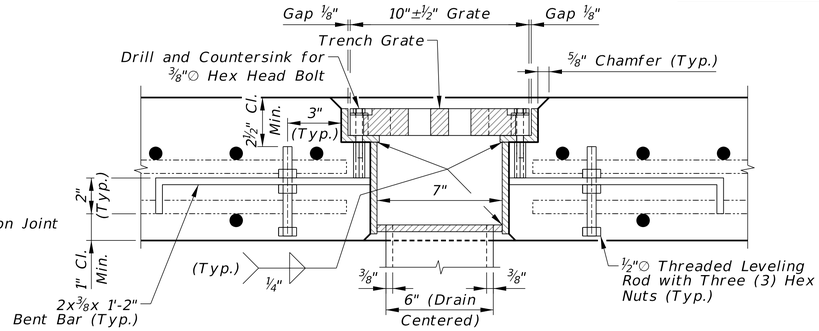

PART SECTION B SHOWING DETAIL B OPTION

Detail is Shown Using 10" Wide Grate
(Median not shown for clarity)

* = Depth Based on Trench Grate Manufacturer.

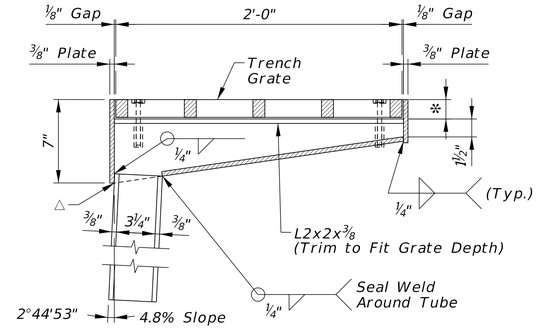

SECTION C

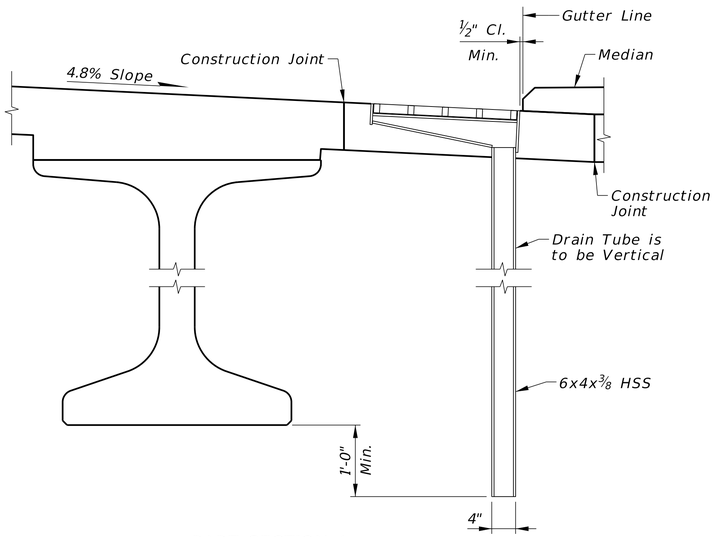

PART SECTION A

DRAIN NOTES:
The drains shall be ⅜" thick steel. The drain assemblies shall be galvanized after fabrication. All costs associated with fabricating and installing the deck drains as per plan shall be subsidiary to the Pay Item "FLOOR DRAINS".

The trench grates shall be ferrous castings. Metal used in the manufacture of castings shall conform to ASTM A48-83 Class 35B or better gray iron castings in accordance with Section 1051 of the Standard Specifications. Finish of castings shall be smooth and free of defects. Trench grates shall be capable of carrying AASHTO HL-93 loading. Galvanizing of the trench grates is not required.

Drains shall be centered over the nearest bottom transverse deck reinforcing bar from the location designated in the Floor Drains Locations Table. The bottom transverse deck reinforcing bar shall be cut off to provide 1" clearance from the drain. The top transverse deck reinforcing bars on each side of the drain shall be spaced as necessary to provide 1" clearance from the drain. Longitudinal deck reinforcing bars that conflict with the drain shall be cut off to provide 2" clearance from the drain. All cut ends of bars shall be coated with epoxy patching material supplied by the Manufacturer of the epoxy coating. Longitudinal deck reinforcing bars shall be shifted as necessary to accommodate anchor bars.

MATERIALS:
Plates, bars, threaded rods and angles shall meet the requirements of ASTM A709 Grade 36. The tube steel shall meet the requirements of ASTM A500 Grade B.

⅜"Ø mechanically galvanized steel hex head bolt and hex nut shall meet the requirements of ASTM B695-04 (2009) and ASTM A307-12 Grade A.

⅜"Ø mechanically galvanized steel flat head screw shall meet the requirements of ASTM B695-04 (2009) and ASTM F835-12.

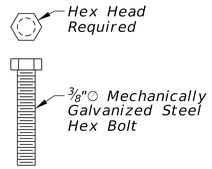

HEX HEAD BOLT DETAIL

Used for Detail B

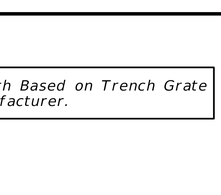

FLAT HEAD SCREW DETAIL

Used for Detail A

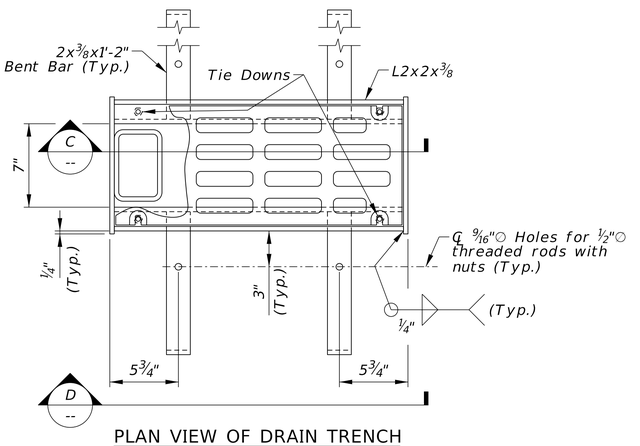

PLAN VIEW OF DRAIN TRENCH

(Grate Tie Downs Show Detail B)

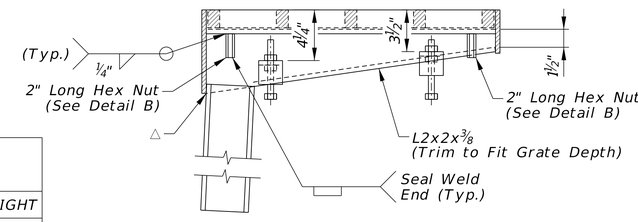

SIDE VIEW D

FLOOR DRAIN LOCATIONS	
STATION	*LEFT/RIGHT*
11549+39	*Left*
11550+45	*Left*

NOTE:
See General Plan & Elevation Sheet for location of Floor Drains.

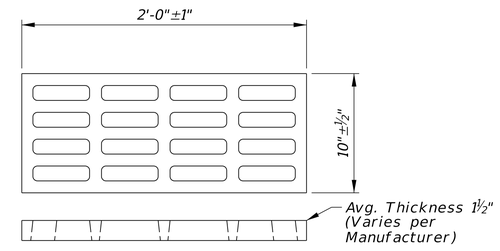

DRAIN TRENCH GRATE DETAILS

(1 Grate Required Per Drain)

NOTE:
Pattern and direction of grate openings shall be similar to the pattern shown.

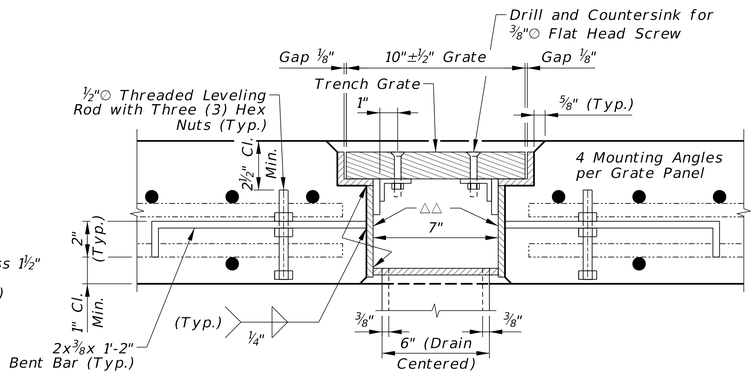

PART SECTION B SHOWING DETAIL A OPTION

Detail is Shown Using 10" Wide Grate
(Median not shown for clarity)

△ = Grind vertical plate flush with angled drain tube prior to welding.

Note: 2 Drains required.

△△ = Adjust shim plate according to width of grate.

PRELIMINARY PLAN
NOT FINAL - SUBJECT TO CHANGE

HDR Engineering Inc.
1917 South 67th Street
Omaha, NE 68106
Office: 402-399-1000
Nebraska C.O.A. CA-0443

S23

PROJECT NUMBER
C-77 (25-15)

C.N.

LOCATION
SOUTH SARPY EXPRESSWAY

STRUCTURE NUMBER

360'-0" 3-SPAN PRESTRESSED CONCRETE GIRDER BRIDGE (NU1800)
FLOOR DRAIN DETAILS

Q.C. ENGINEER: K. Devkota DATE MARCH 2026

SKEW Varies
ROADWAY 40'-0" WB/40'-0" EB
FHWA CONST. TYPE X081
DESIGN LIVE LOAD HL-93
DESIGN CODE LRFD 9th Edition
STA. 11549+94.00
REF. POST. ---
HWY. NO. ---
COUNTY SARPY

DESIGNED BY: R. Paradis DETAILED BY: T. Sas

SPECIAL PLAN NO. 1

23/31

Computer: 2MQ5130W92
Date: 13-FEB-2026 15:24
File: NDOT_2D_SP1.dgn

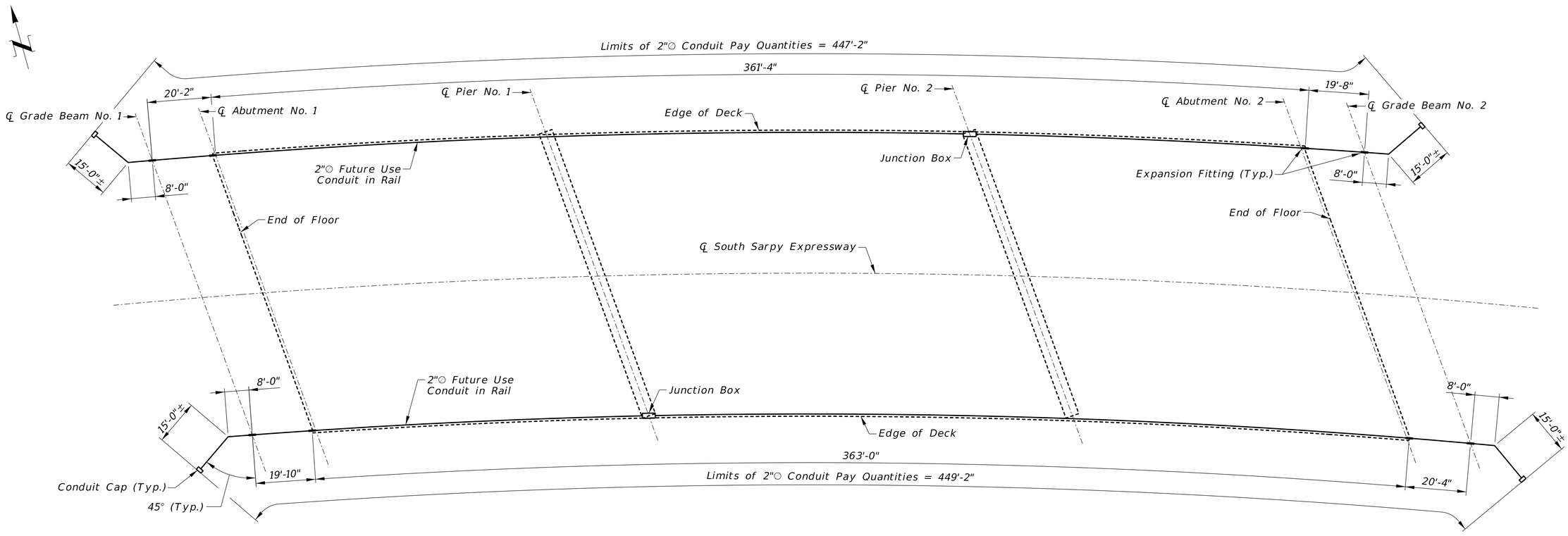

CONDUIT LINE DIAGRAM

Not to Scale

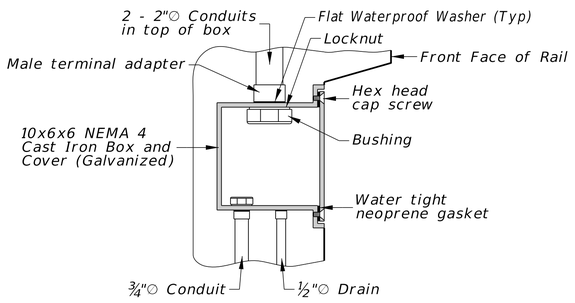

JUNCTION BOX

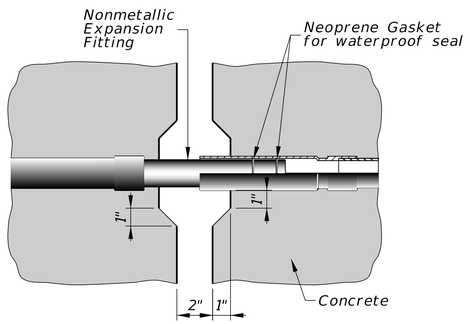

EXPANSION FITTING (4" max. Movement)

NOTE:
Install one drain between each Junction Box and Abutments. Electrical Conduit shall be placed in such a manner as to provide a low spot at this point.

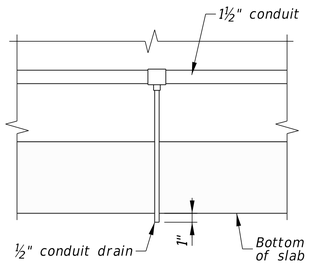

CONDUIT DRAIN

ELECTRICAL CONDUIT NOTES

All conduit shall be P.V.C. and bear the U.L. label, with the exception that conduit stub outs shall be Type GRS or IMC.

All fittings used with P.V.C. conduit shall be P.V.C. Metallic fittings are not acceptable.

Expansion fittings shall be installed with conduit positioned with respect to ambient temperature and shall bear the U.L. label.

Conduit bends, elbows, and offsets shall be accurately formed.

The conduit installation shall be performed by or under the direct supervision of a competent Journeyman Electrician or Lineman.

Junction boxes for bridge conduit systems shall be manufactured of machineable quality, gray cast iron, outside-flanged with recessed gasketed cover. Boxes shall be NEMA 4 rated, and have a hot dipped galvanized finish. Cover screws shall be hex head stainless steel or brass. Each junction box shall be provided with a drain pipe. Conduit entrances into the junction box shall be slip holes. Sealing type lock nuts shall be used at all conduit entrances.

Junction boxes shall be type "YR" as manufactured by O.Z. Gedney Company, type "ER" or as manufactured by Spring City Electrical Mfg. Company, Series "WJBF" as manufactured by Cooper Crouse-Hinds, or approved equal.

Junction boxes, outlet boxes, expansion fittings, conduit drains, couplings, and all other hardware and miscellaneous fittings required for the installation of the conduit system will be subsidiary to the Pay Item, "2" CONDUIT IN BRIDGE".

Conduit drains with 1" projection from the concrete face, must be provided at each junction box and at low spots in the electrical conduit.

PRELIMINARY PLAN
NOT FINAL - SUBJECT TO CHANGE

HDR Engineering Inc.
1917 South 67th Street
Omaha, NE 68106
Office: 402-399-1000
Nebraska C.O.A. CA-0443

S24

PROJECT NUMBER
C-77 (25-15)

C.N.

LOCATION
SOUTH SARPY EXPRESSWAY

STRUCTURE NUMBER

360'-0" 3-SPAN PRESTRESSED CONCRETE GIRDER BRIDGE (NU1800)

CONDUIT DETAILS

Q.C. ENGINEER: M. Wagner-Loos DATE MARCH 2026

DESIGNED BY: R. Paradis DETAILED BY: T. Sas

COUNTY SARPY
HWY. NO. ---
REF. POST. ---
STA. 11549+94.00
DESIGN CODE LRFD 9th Edition

SKEW Varies
ROADWAY 40'-0" WB/40'-0" EB
FHWA CONST. TYPE X081
DESIGN LIVE LOAD HL-93

SPECIAL PLAN NO. 1

24/31

Computer: 2M05130W92
Date: 13-FEB-2026 15:24
File: NDOT_2D_SP1.dgn

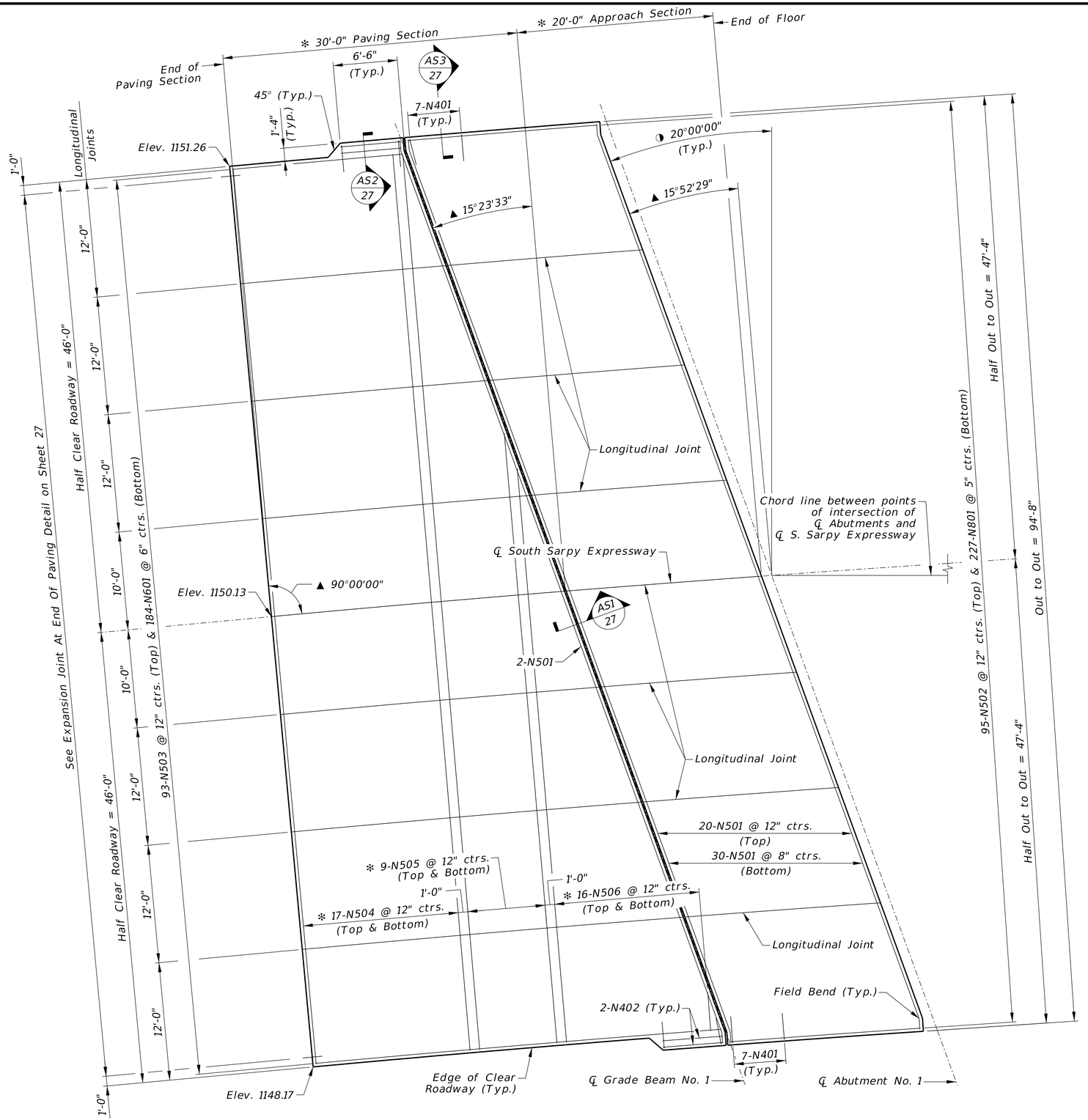

GENERAL PLAN OF APPROACH SLAB NO. 1

NOTES:

◐ *Measured perpendicular to Chord Line.*

▲ *Measured perpendicular to local tangent.*

✻ *Measured along ℄ South Sarpy Expressway.*

S25

PROJECT NUMBER
C-77 (25-15)

C.N.

LOCATION
SOUTH SARPY EXPRESSWAY

STRUCTURE NUMBER

360'-0" 3-SPAN PRESTRESSED CONCRETE GIRDER BRIDGE (NU1800)

APPROACH SLAB DETAILS (1 OF 4)

COUNTY SARPY
HWY. NO. ---
REF. POST. ---
STA. 11549+94.00
DESIGN CODE LRFD 9th Edition

SKEW Varies
ROADWAY 40'-0" WB/40'-0" EB
FHWA CONST. TYPE X081
DESIGN LIVE LOAD HL-93

DESIGNED BY: R. Paradis
DETAILED BY: T. Sas
Q.C. ENGINEER: M. Wagner-Loos
DATE MARCH 2026

PRELIMINARY PLAN
NOT FINAL - SUBJECT TO CHANGE

HDR Engineering Inc.
1917 South 67th Street
Omaha, NE 68106
Office: 402-399-1000
Nebraska C.O.A. CA-0443

SPECIAL PLAN NO. 1

25/31

File: NDOT_2D_SP1.dgn
Date: 13-FEB-2026 15:24
Computer: 2MQ5130W92

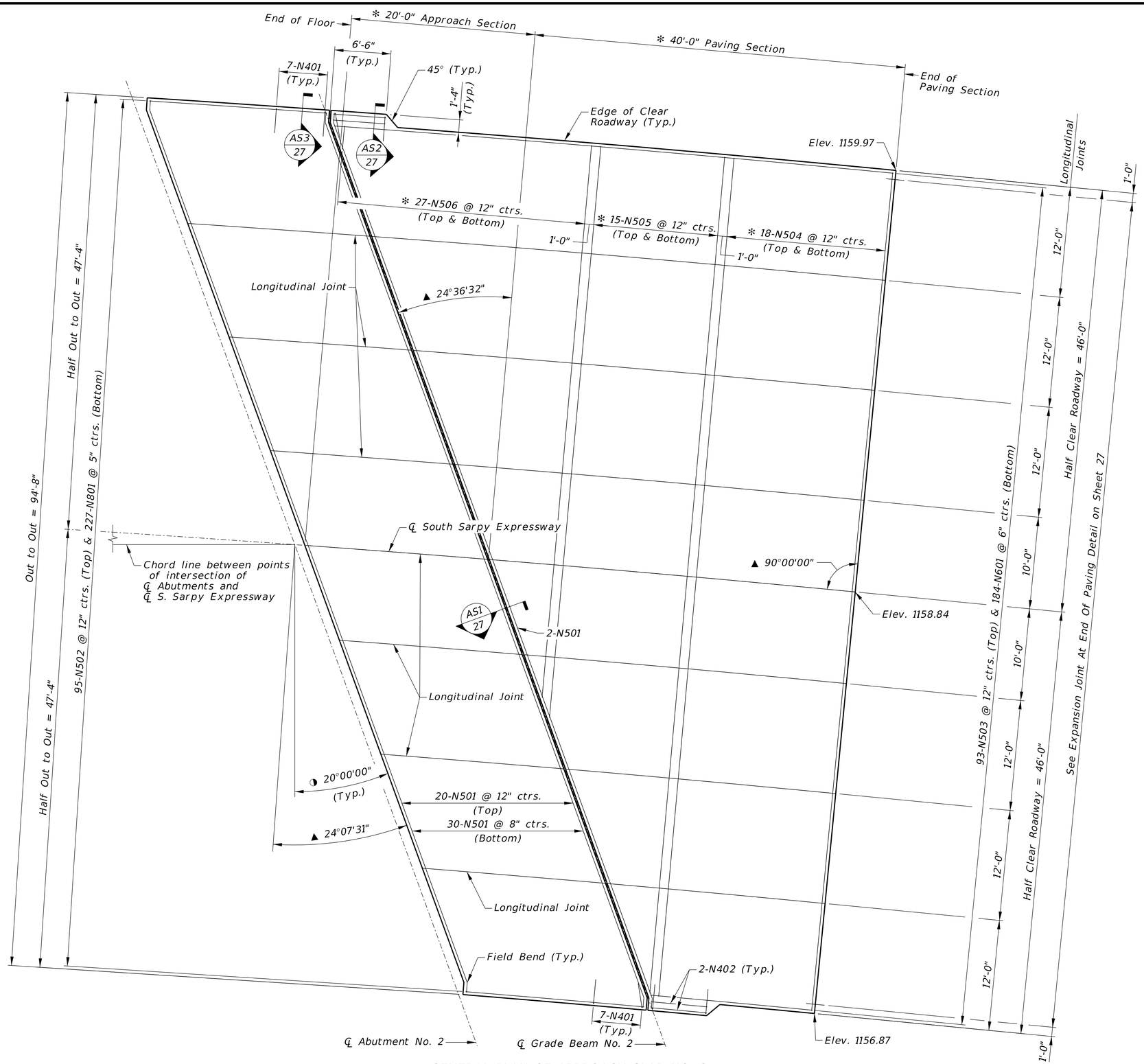

GENERAL PLAN OF APPROACH SLAB NO. 2

NOTES:

◐ *Measured perpendicular to Chord Line.*

▲ *Measured perpendicular to local tangent.*

✻ *Measured along ℄ South Sarpy Expressway.*

PRELIMINARY PLAN
NOT FINAL - SUBJECT TO CHANGE

HDR Engineering Inc.
1917 South 67th Street
Omaha, NE 68106
Office: 402-399-1000
Nebraska C.O.A. CA-0443

S26

PROJECT NUMBER
C-77 (25-15)

C.N.

LOCATION
SOUTH SARPY EXPRESSWAY

STRUCTURE NUMBER

360'-0" 3-SPAN PRESTRESSED CONCRETE GIRDER BRIDGE (NU1800)

APPROACH SLAB DETAILS (2 OF 4)

SKEW Varies
ROADWAY 40'-0" WB/40'-0" EB
FHWA CONST. TYPE X081
DESIGN LIVE LOAD HL-93
DESIGN CODE LRFD 9th Edition

COUNTY SARPY
HWY. NO. ---
REF. POST. ---
STA. 11549+94.00

DESIGNED BY: R. Paradis
DETAILED BY: T. Sas
Q.C. ENGINEER: M. Wagner-Loos
DATE MARCH 2026

SPECIAL PLAN NO. 1

26/31

File: NDOT_2D_SP1.dgn
Date: 13-FEB-2026 15:24
Computer: 2MQ5130W92

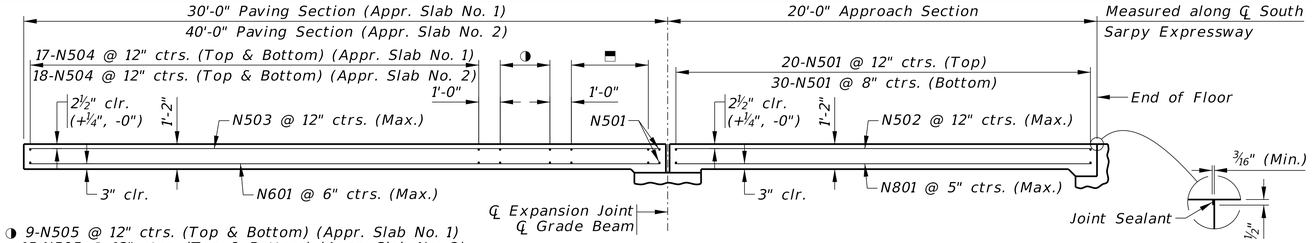

GENERAL SECTION OF APPROACH SLAB

Approach Slab No. 1 Shown, Approach Slab No. 2 Similar & Opposite

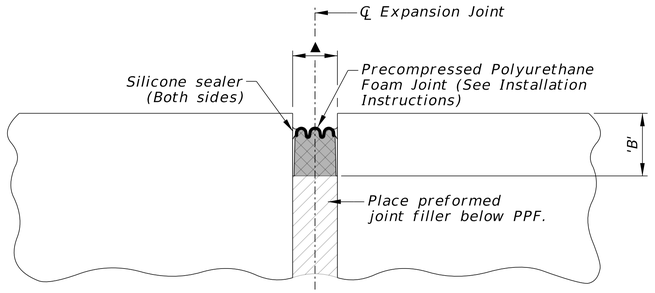

SECTION AT EXPANSION JOINT

Not to Scale

EXPANSION JOINT GAP DIMENSIONS	
AMBIENT TEMPERATURE RANGE DURING POUR (°F)	▲ *Gap Width*
35 - 45	*2¼"*
45 - 55	*2"*
55 - 75	*1¾"*
75 - 85	*1½"*

EXPANSION JOINT NOTES:

▲ *Nominal Joint Opening at time of pour. Adjust for temperature as shown in the table. Dimensions measured Normal to ℄ Expansion Joint.*

PPF Joint Nominal Material Size to be ordered for a 50° opening +¼".

Dimension 'B' provided by Expansion Joint manufacturer.

PPF JOINT - INSTALLATION INSTRUCTIONS

1. *Correctly form and cure the expansion joint gap.*
2. *Sandblast gap surfaces to clean and prepare.*
3. *Thoroughly clean gap with compressed air and solvent-dampened rags to remove all dust and contaminants.*
4. *Apply manufacturer's epoxy adhesive to gap surfaces, as instructed. Make sure to install joint before epoxy adhesive begins to cure.*
5. *Push first section of PPF Joint down into place, working a few feet at a time. Leave end to be spliced sticking out of gap.*
6. *Install next section of PPF, working towards previously installed section. Push spliced ends tightly together, and set splice in place. Connect silicone facings together per manufacturers instructions.*
7. *Repeat process for additonal sections of PPF Joint. Measure and cut final section of PPF Joint as needed.*
8. *Once seal is fully placed, apply silicone sealer to top corners of joint. Force tip of caulking gun into corner to completely fill.*

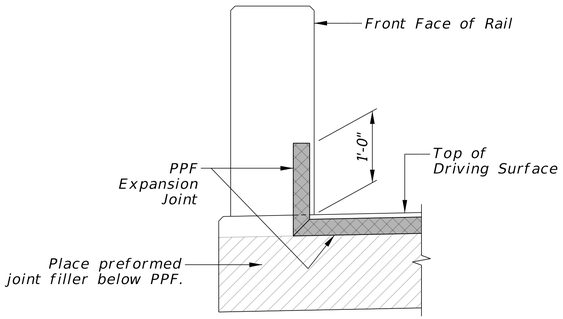

JOINT DETAIL AT RAIL

Not to Scale

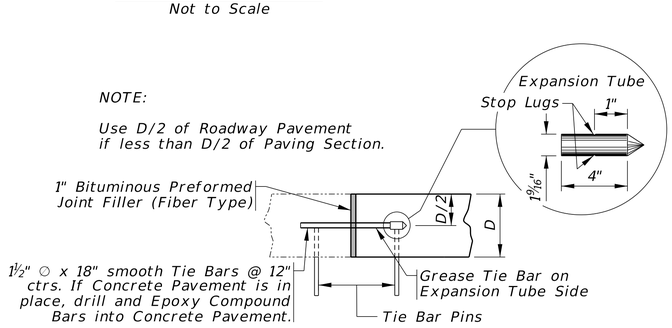

JOINT AT END OF PAVING SECTION

Not to Scale

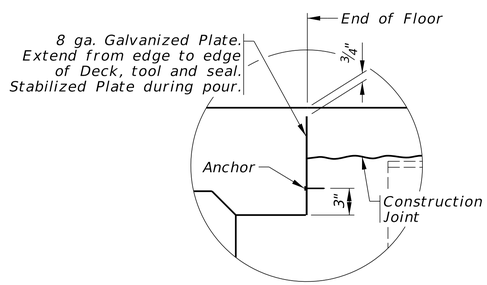

ALTERNATE JOINT DETAIL AT END OF FLOOR

(To be used if Approach Slab is poured continuous with Bridge Deck)
Not to Scale

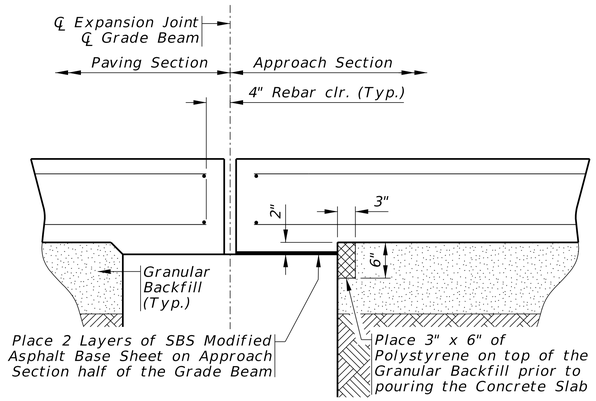

SECTION AS1

Typical at Grade Beam
Not to Scale

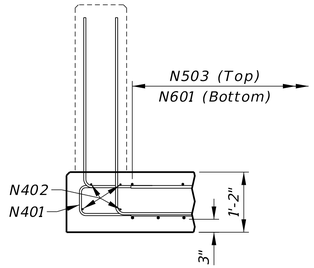

SECTION AS2

Typical

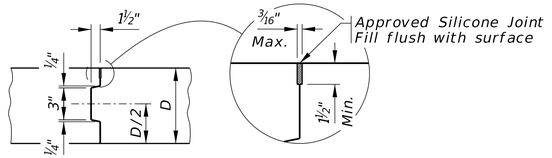

CONSTRUCTION JOINT

Not to Scale

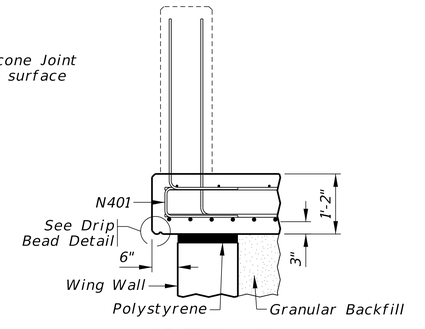

SECTION AS3

Typical

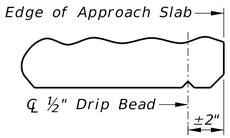

DRIP BEAD DETAIL

Not to Scale

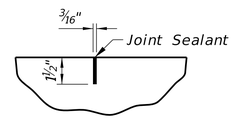

LONGITUDINAL JOINT DETAIL

Not to Scale

APPROACH SLAB NOTES:

See Approach Rail sheets for placement of Rail Reinforcement.

SBS Modified Asphalt Base Sheets and all other miscellaneous items shall be considered subsidiary to the Pay Item, CONCRETE FOR PAVEMENT APPROACHES CLASS 47BD-4000.

SBS Modified Asphalt Base Sheets shall be modified bitumen roofing material, with a minimum thickness of 0.090 inch and a minimum weight of 60 lbs. per 100 sq. feet.

Longitudinal Joints shall be 1½" deep and placed in the paving and approach slabs in accordance with the Standard Specifications. Contractor shall exercise care not to damage reinforcing steel placed in the top layer of the slabs.

PRELIMINARY PLAN
NOT FINAL - SUBJECT TO CHANGE

HDR Engineering Inc.
1917 South 67th Street
Omaha, NE 68106
Office: 402-399-1000
Nebraska C.O.A. CA-0443

S27

PROJECT NUMBER C-77 (25-15)

C.N.

LOCATION
SOUTH SARPY EXPRESSWAY

STRUCTURE NUMBER

360'-0" 3-SPAN PRESTRESSED CONCRETE GIRDER BRIDGE (NU1800)

APPROACH SLAB DETAILS (3 OF 4)

Q.C. ENGINEER: M. Wagner-Loos DATE MARCH 2026

DETAILED BY: T. Sas

DESIGNED BY: R. Paradis

SKEW Varies
ROADWAY 40'-0" WB/40'-0" EB
FHWA CONST. TYPE X081
DESIGN LIVE LOAD HL-93
DESIGN CODE LRFD 9th Edition
STA. 11549+94.00
REF. POST. ---
HWY. NO. ---
COUNTY SARPY

SPECIAL PLAN NO. 1

27/31

Computer: 2MQ5130W92
Date: 13-FEB-2026 15:24
File: NDOT_2D_SP1.dgn

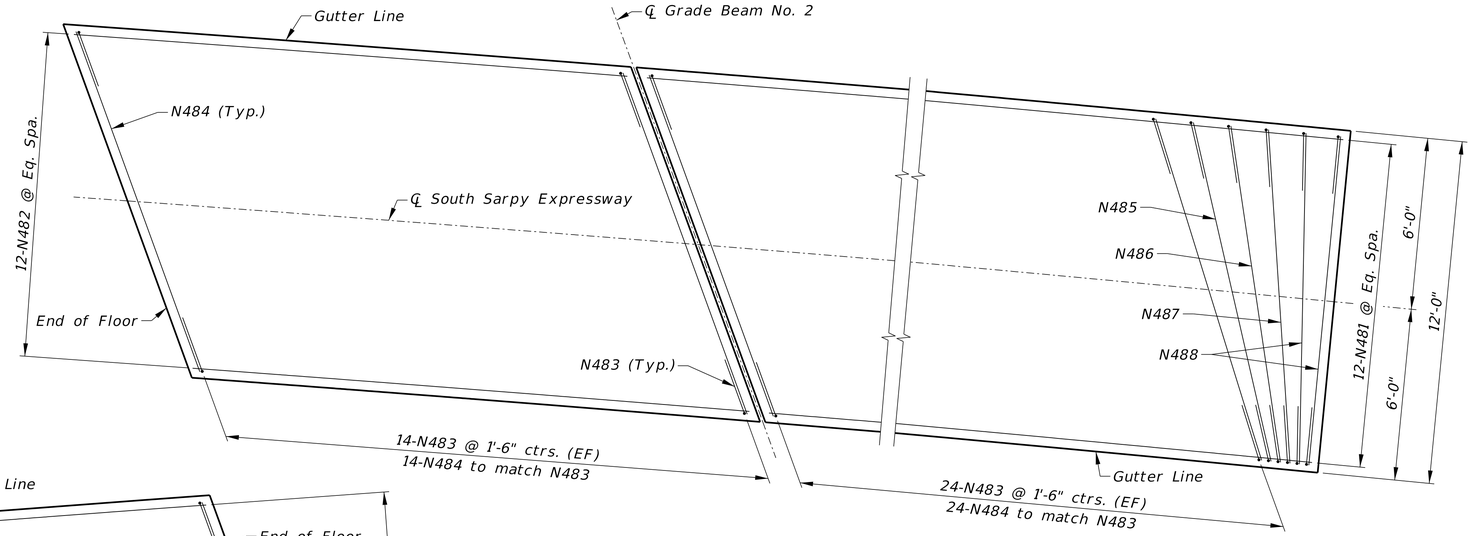

PLAN OF APPROACH SLAB NO. 2 MEDIAN REINFORCING

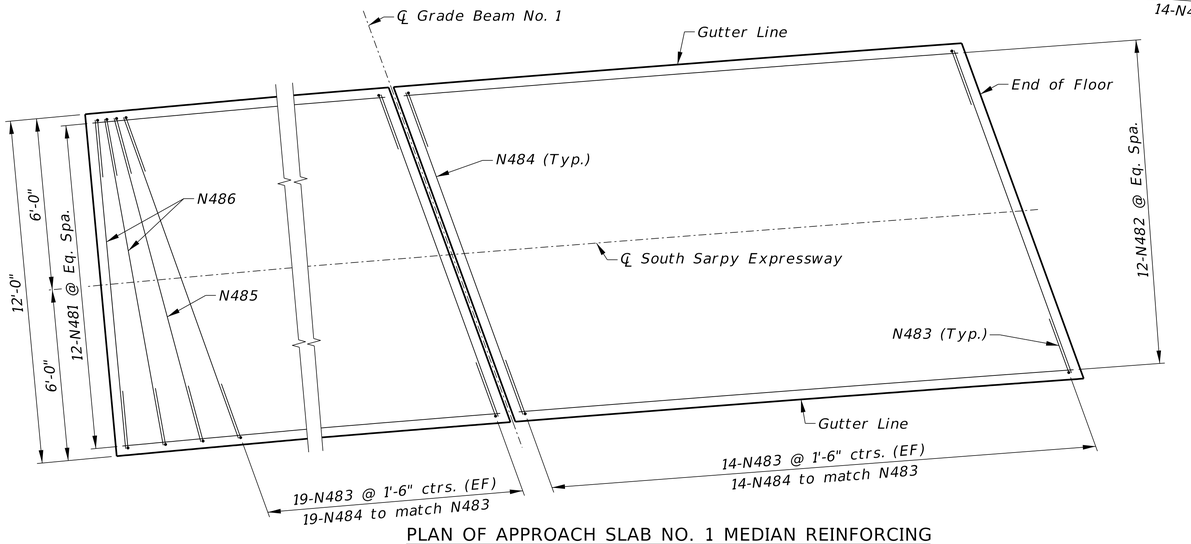

PLAN OF APPROACH SLAB NO. 1 MEDIAN REINFORCING

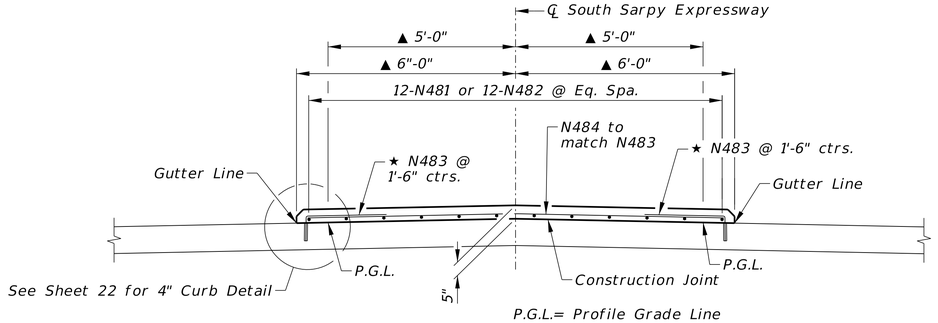

P.G.L.= Profile Grade Line

★ Drill hole into existing concrete, and fill with an approved resin adhesive prior to inserting bar. See Special Provisions. Follow resin manufacturer's recommendations for hole depth and diameter. Bar length based on a 6" deep hole.

▲ Measured perpendicular to ℄ South Sarpy Expressway.

PROVIDE 2" COVER FOR ALL MEDIAN REINFORCEMENT

MEDIAN SECTION AT APPROACH SLAB

Not to Scale

PRELIMINARY PLAN
NOT FINAL - SUBJECT TO CHANGE

HDR Engineering Inc.
1917 South 67th Street
Omaha, NE 68106
Office: 402-399-1000
Nebraska C.O.A. CA-0443

S28

PROJECT NUMBER
C-77 (25-15)

C.N.

LOCATION
SOUTH SARPY EXPRESSWAY

STRUCTURE NUMBER

360'-0" 3-SPAN PRESTRESSED CONCRETE GIRDER BRIDGE (NU1800)

APPROACH SLAB DETAILS (4 OF 4)

Q.C. ENGINEER: M. Wagner-Loos DATE MARCH 2026

COUNTY SARPY
HWY. NO. ---
REF. POST. ---
STA. 11549+94.00
DESIGN CODE LRFD 9th Edition

SKEW Varies
ROADWAY 40'-0" WB/40'-0" EB
FHWA CONST. TYPE X081
DESIGN LIVE LOAD HL-93

DESIGNED BY: R. Paradis
DETAILED BY: T. Sas

SPECIAL PLAN NO. 1

28/31

Computer: 2MQ5130W92
Date: 13-FEB-2026 15:24
File: NDOT_2D_SP1.dgn

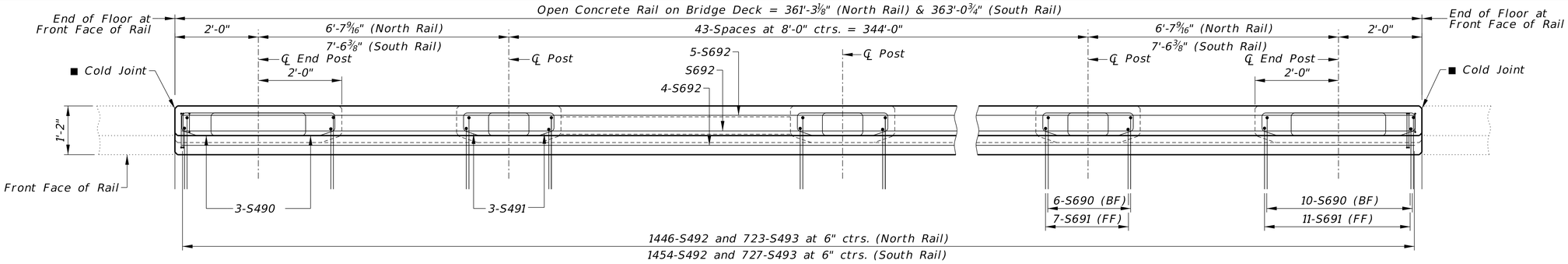

PARTIAL PLAN OF OPEN CONCRETE RAIL ON BRIDGE

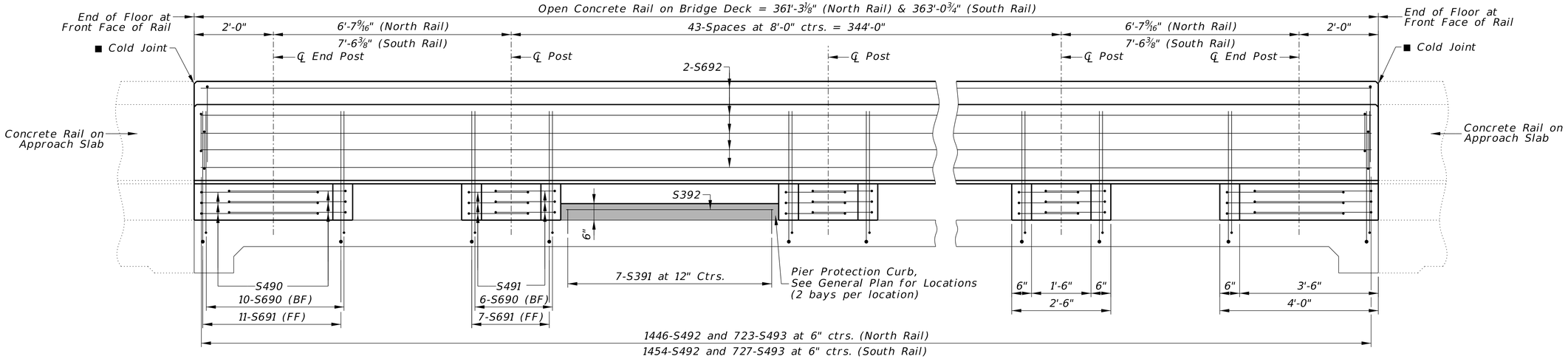

PARTIAL ELEVATION OF OPEN CONCRETE RAIL ON BRIDGE

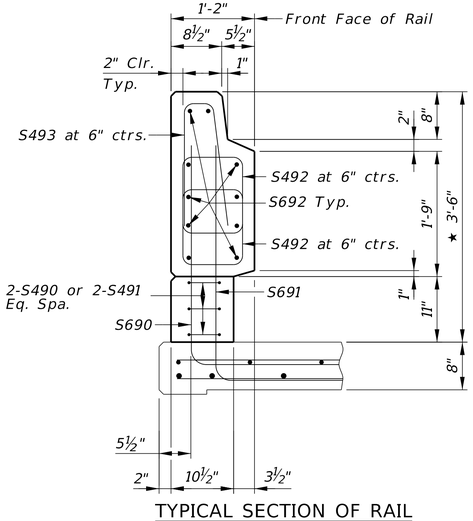

TYPICAL SECTION OF RAIL

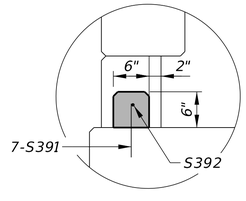

SECTION OF PIER PROTECTION CURB

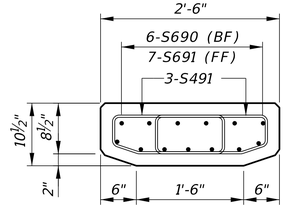

PLAN OF 2'-6" POST

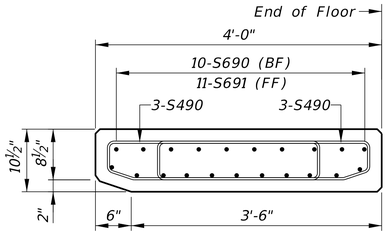

PLAN OF 4'-0" POST

NOTES

Concrete rail and posts will be built plumb.

■ When pouring concrete rails, a mandatory chamfered cold joint must be formed at the end of floor.

★ Measured at front face of rail.

(EF) = Each Face (FF) = Front Face (BF) = Back Face

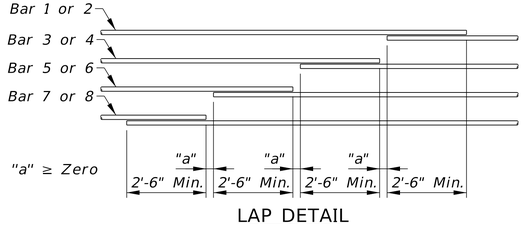

LAP DETAIL
Not to Scale

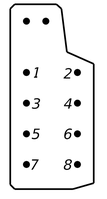

RAIL SECTION
See Lap Detail

PRELIMINARY PLAN
NOT FINAL - SUBJECT TO CHANGE

HDR Engineering Inc.
1917 South 67th Street
Omaha, NE 68106
Office: 402-399-1000
Nebraska C.O.A. CA-0443

S29

PROJECT NUMBER
C-77 (25-15)

C.N.

LOCATION
SOUTH SARPY EXPRESSWAY

STRUCTURE NUMBER

360'-0" 3-SPAN PRESTRESSED CONCRETE GIRDER BRIDGE (NU1800)
CONCRETE RAIL ON BRIDGE

SKEW Varies
ROADWAY 40'-0" WB/40'-0" EB
FHWA CONST. TYPE X081
DESIGN LIVE LOAD HL-93
DESIGN CODE LRFD 9th Edition

COUNTY SARPY
HWY. NO. ---
REF. POST. ---
STA. 11549+94.00

Q.C. ENGINEER: M. Wagner-Loos DATE MARCH 2026
DESIGNED BY: R. Paradis DETAILED BY: T. Sas

SPECIAL PLAN NO. 1

29/31

Computer: 2MQ5130W92
Date: 13-FEB-2026 15:24
File: NDOT_2D_SP1.dgn

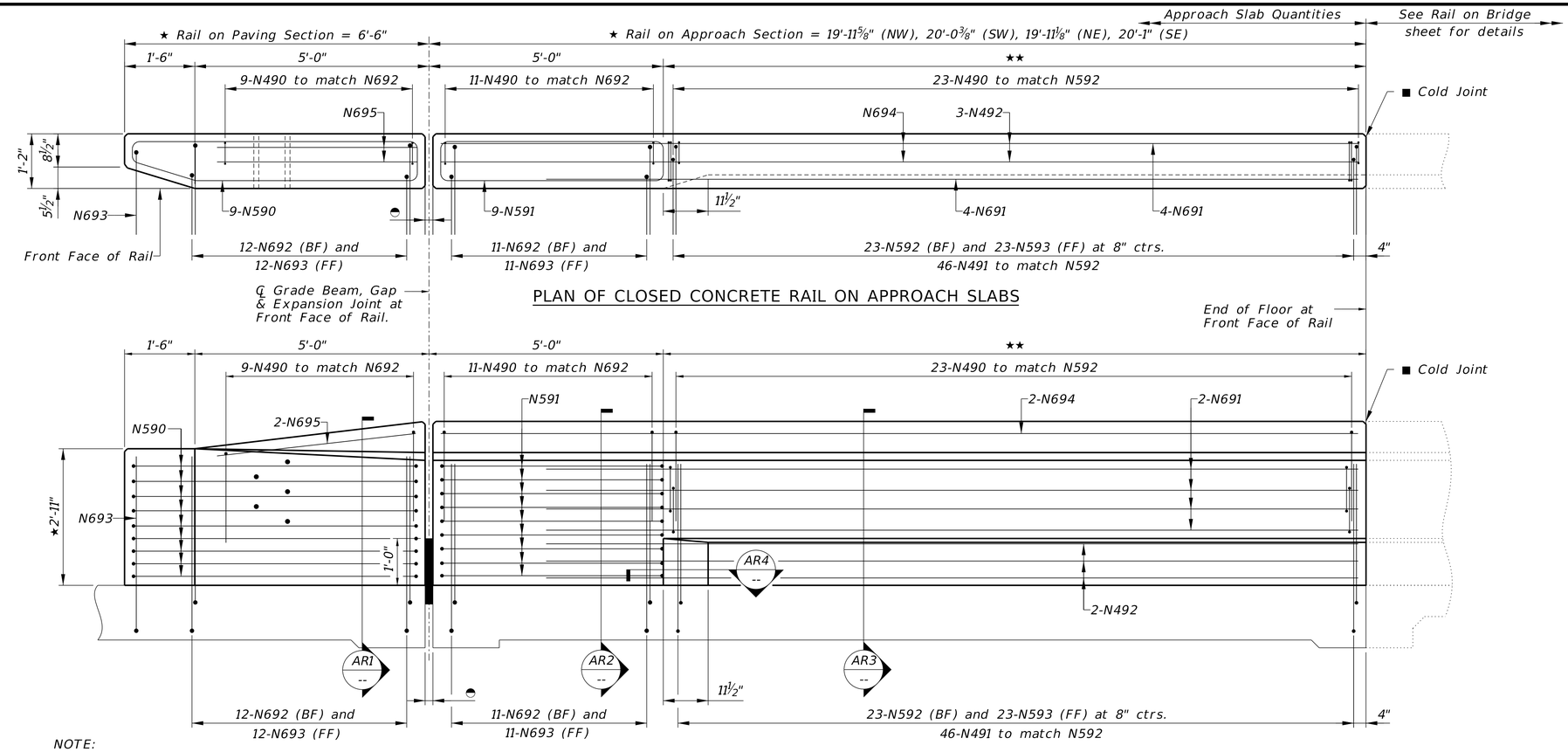

PLAN OF CLOSED CONCRETE RAIL ON APPROACH SLABS

ELEVATION OF CLOSED CONCRETE RAIL ON APPROACH SLABS

NOTE:

★★ 14'-11 11/16" (Abutment No. 1 Left)
15'-0 3/8" (Abutment No. 1 Right)
14'-11 1/8" (Abutment No. 2 Left)
15'-0 15/16" (Abutment No. 2 Right)

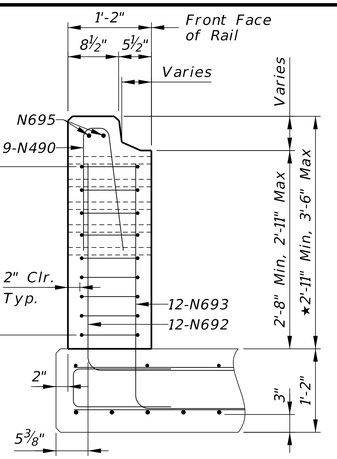

SECTION AR1

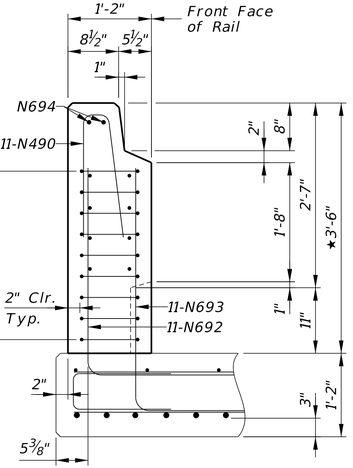

SECTION AR2

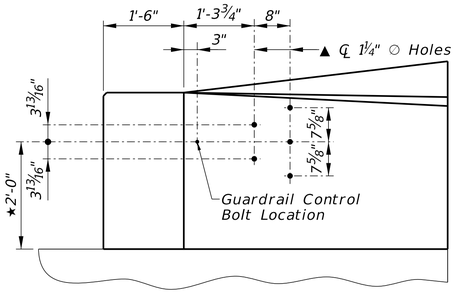

THRIE BEAM TERMINAL CONNECTION DETAIL

▲ *As an alternate method, the contractor shall furnish and cast into the concrete an approved welded assembly consisting of threaded inserts, held accurately to the template of the holes shown. Inserts are to be complete with galvanized plate washers and galvanized 7/8" ∅ x 2" cap screws. The insert assembly shall be a standard product of a reputable manufacturer of such items and be capable of resisting a shear load of 80,000 lbs.*

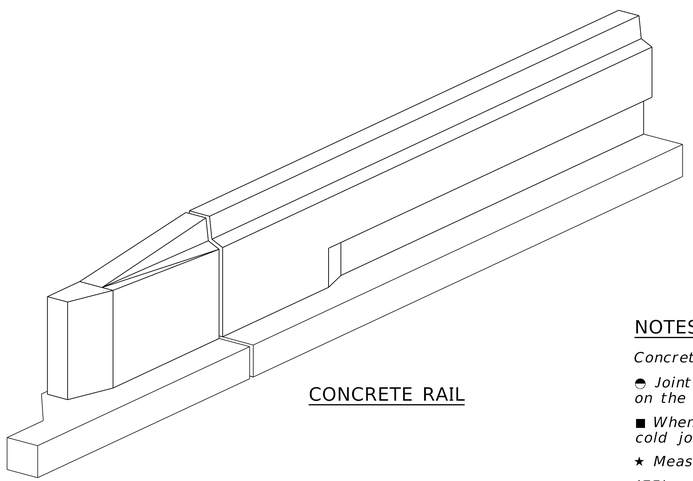

CONCRETE RAIL

NOTES

Concrete rail will be built plumb.

◓ *Joint material and opening shall match what is shown on the Approach Slab sheet.*

■ *When pouring concrete rails, a mandatory chamfered cold joint must be formed at the end of floor.*

★ *Measured at front face of rail.*

(EF) = Each Face (FF) = Front Face (BF) = Back Face

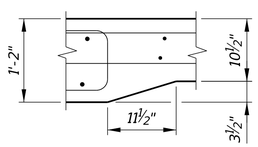

SECTION AR4

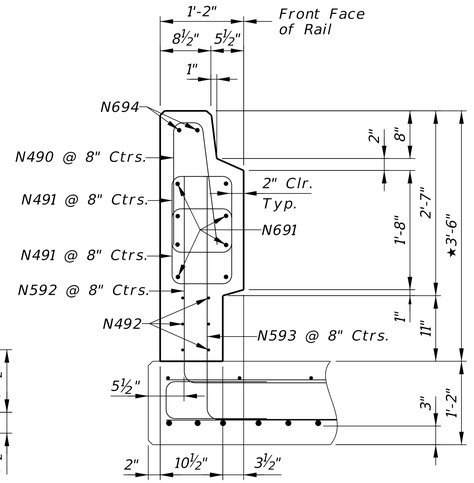

SECTION AR3

PRELIMINARY PLAN
NOT FINAL - SUBJECT TO CHANGE

HDR Engineering Inc.
1917 South 67th Street
Omaha, NE 68106
Office: 402-399-1000
Nebraska C.O.A. CA-0443

S30

PROJECT NUMBER C-77 (25-15)

C.N.

LOCATION
SOUTH SARPY EXPRESSWAY

STRUCTURE NUMBER

360'-0" 3-SPAN PRESTRESSED CONCRETE GIRDER BRIDGE (NU1800)
CONCRETE RAIL ON APPROACH SLAB

Q.C. ENGINEER: M. Wagner-Loos DATE MARCH 2026

SKEW Varies
ROADWAY 40'-0" WB/40'-0" EB
FHWA CONST. TYPE X081
DESIGN LIVE LOAD HL-93
DESIGN CODE LRFD 9th Edition
STA. 11549+94.00
REF. POST. ---
HWY. NO. ---
COUNTY SARPY

DESIGNED BY: R. Paradis
DETAILED BY: T. Sas
CHECKED BY:

SPECIAL PLAN NO. 1
30 / 31

Computer: 2MQS130W92
Date: 13-FEB-2026 15:24
File: NDOT_2D_SP1.dgn

BILL OF BARS

APPROACH SLAB NO. 1

MARK	NUMBER OF BARS	LENGTH	TYPE	A	B	C	D	E	F	PIN Ø	HOOK	WEIGHT (LB)
N801	227	19'-4"	STR.									11718
N601	184	29'-4" Avg.	STR.									8107
N501	52	103'-3"	STR.	Includes 1 - 3'-1" lap								5600
N502	95	19'-4"	STR.									1916
N503	93	29'-4" Avg.	STR.									2845
N504	34	94'-7"	STR.	Includes 1 - 3'-1" lap								3354
N505	18	79'-5" Avg.	STR.	Includes 1 - 3'-1" lap								1491
N506	32	30'-10" Avg.	STR.									1029
N401	28	8'-7"	103	4'-0"	7"	4'-0"				2"		161
N402	8	6'-2"	STR.									33
N481	12	29'-6" Avg.	STR.									236
N482	12	19'-4"	STR.									155
N483	72	2'-9"	104	9"	2'-0"					2"		132
N484	33	11'-11"	STR.									263
N485	1	11'-6"	STR.									8
N486	2	11'-4"	STR.									15
											TOTAL (LB) =	37063

BILL OF BARS

APPROACH SLAB NO. 2

MARK	NUMBER OF BARS	LENGTH	TYPE	A	B	C	D	E	F	PIN Ø	HOOK	WEIGHT (LB)
N801	227	19'-4"	STR.									11718
N601	184	38'-10" Avg.	STR.									10732
N501	52	103'-3"	STR.	Includes 1 - 3'-1" lap								5600
N502	95	19'-4"	STR.									1916
N503	93	38'-10" Avg.	STR.									3767
N504	36	94'-7"	STR.	Includes 1 - 3'-1" lap								3551
N505	30	79'-5" Avg.	STR.	Includes 1 - 3'-1" lap								2485
N506	54	30'-7" Avg.	STR.									1723
N401	28	8'-7"	103	4'-0"	7"	4'-0"				2"		161
N402	8	6'-2"	STR.									33
N481	12	39'-6" Avg.	STR.									317
N482	12	19'-4"	STR.									155
N483	86	2'-9"	104	9"	2'-0"					2"		158
N484	38	12'-7"	STR.									319
N485	1	12'-3"	STR.									8
N486	1	11'-11"	STR.									8
N487	1	11'-8"	STR.									8
N488	2	11'-6"	STR.									15
											TOTAL (LB) =	42674

BILL OF BARS

CONCRETE RAIL ON APPROACH

MARK	NUMBER OF BARS	LENGTH	TYPE	A	B	C	D	E	F	PIN Ø	HOOK	WEIGHT (LB)
N691	32	17'-0"	STR.									817
N692	92	5'-10"	104	2'-11"	2'-11"					4½"		806
N693	96	6'-10"	104	3'-5"	3'-5"					4½"		985
N694	8	19'-7"	STR.									235
N695	8	6'-1"	STR.									73
N590	36	14'-5"	130	4'-8"	10"	6'-1"	5"	1'-6"	1'-5"	2½"	5½"	541
N591	36	11'-11"	107	4'-8"	10"					2½"	5½"	447
N592	92	5'-10"	104	2'-11"	2'-11"					3¾"		560
N593	92	6'-10"	104	3'-5"	3'-5"					3¾"		656
N490	172	4'-4"	131	2'-0"	4"	2'-0"	3"			2"		498
N491	184	4'-7"	107	1'-1"	10"					2"	4½"	563
N492	24	16'-4"	STR.									262
											TOTAL (LB) =	6443

BAR SETS - APPROACH SLAB NO. 1

MARK	MAX. LENGTH	MIN. LENGTH	NO. OF SETS	BARS PER SET
N601	41'-4"	17'-4"	1	184
N503	41'-4"	17'-4"	1	93
N505	94'-4"	64'-6"	2	9
N506	57'-9"	3'-11"	2	16
N481	31'-0"	28'-0"	1	12

BAR SETS - APPROACH SLAB NO. 2

MARK	MAX. LENGTH	MIN. LENGTH	NO. OF SETS	BARS PER SET
N601	60'-0"	17'-8"	1	184
N503	60'-0"	17'-8"	1	93
N505	94'-4"	64'-6"	2	15
N506	59'-4"	1'-10"	2	27
N481	42'-2"	36'-10"	1	12

BAR MARK

A413 A 4 13

- 13 — BAR NUMBER: 01 - 99
- 4 — BAR SIZE
- A — TYPE OF BRIDGE ELEMENT: (D = Drilled Shaft, A = Abutment, B = Bent, P = Pier, S = Slab & N = Approach Slab)

THE NUMBER OF LAP SPLICES ARE CALCULATED BASED ON 60'-0" LENGTHS OF REINFORCING STEEL BARS.
SPLICES ON BARS SHORTER THAN 60'-0" WILL REQUIRE ADDITIONAL LAP SPLICES AT NO ADDITIONAL EXPENSE TO NDOT.

STANDARD HOOK LENGTH

BAR SIZE	PRIMARY STRESS HOOK 90°	PRIMARY STRESS HOOK 180°	STIRRUPS & TIES BAR SIZE	STIRRUPS & TIES HOOK 90°	STIRRUPS & TIES HOOK 135°
			3	4"	4"
4	8"	6"	4	4½"	4½"
5	10"	7"	5	6"	5½"
6	12"	8"	6	12"	8"
7	15"	10"	7	14"	9"
8	17"	11"	8	16"	10½"
9	19"	15"			
10	23"	17"			
11	24"	19"			
14	31"	27"			
18	41"	36"			

d = Bar Size
Dp = Pin Diameter

PIN DIAMETER

PRIMARY STRESS BAR SIZE	PRIMARY STRESS Dp	STIRRUPS & TIES BAR SIZE	STIRRUPS & TIES Dp
		3	1½"
4	3"	4	2"
5	3¾"	5	2½"
6	4½"	6	4½"
7	5¼"	7	5¼"
8	6"	8	6"
9	9½"		
10	10¾"		
11	12"		
14	18¼"		
18	24"		

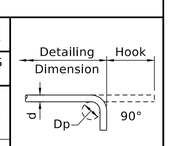

BENDING DIAGRAMS

ALL DIMENSIONS ARE OUT TO OUT & NOT TO SCALE

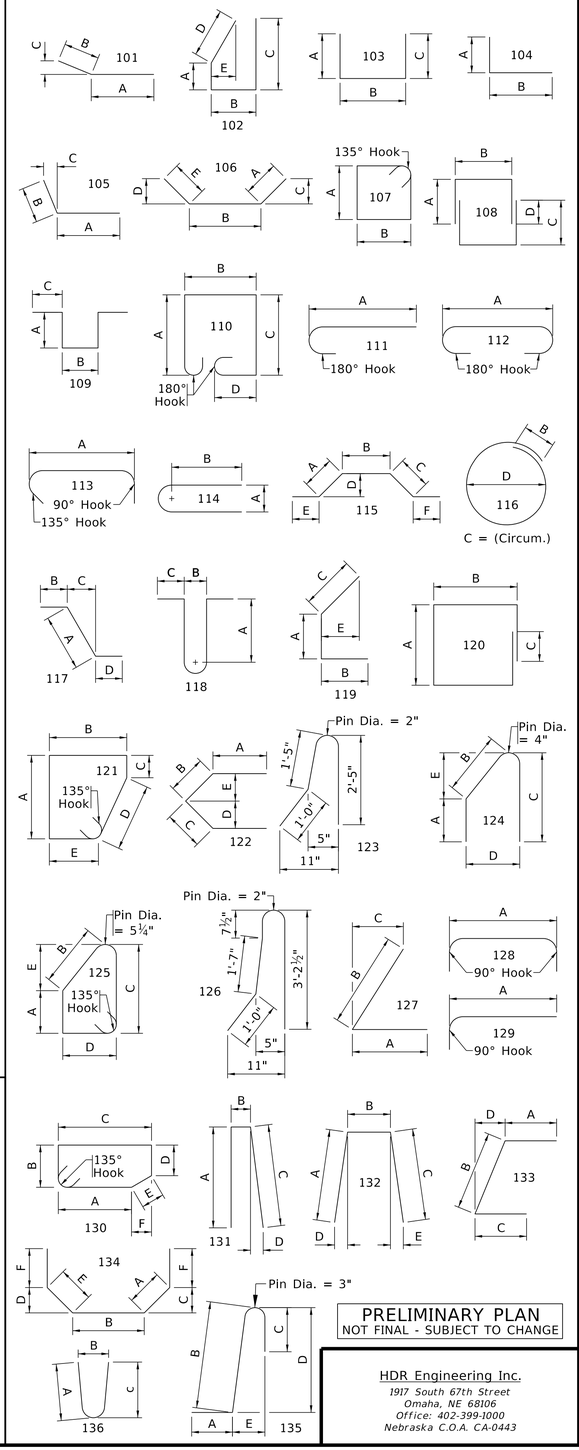

PRELIMINARY PLAN
NOT FINAL - SUBJECT TO CHANGE

HDR Engineering Inc.
1917 South 67th Street
Omaha, NE 68106
Office: 402-399-1000
Nebraska C.O.A. CA-0443

S31

PROJECT NUMBER C-77 (25-15)

C.N.

LOCATION
SOUTH SARPY EXPRESSWAY

STRUCTURE NUMBER

360'-0" 3-SPAN PRESTRESSED CONCRETE GIRDER BRIDGE (NU1800)

BILL OF BARS & BENDING DIAGRAMS

Q.C. ENGINEER: M. Wagner-Loos DATE MARCH 2026

DETAILED BY: T. Sas

DESIGNED BY: R. Paradis

COUNTY SARPY
HWY. NO. ---
REF. POST. ---
STA. 11549+94.00

SKEW Varies
ROADWAY 40'-0" WB/40'-0" EB
FHWA CONST. TYPE X081
DESIGN LOAD HL-93
DESIGN CODE LRFD 9th Edition

SPECIAL PLAN NO. 1

31/31

Computer: 2MQ5130W92
Date: 13-FEB-2026 15:24
File: NDOT_2D_SP1.dgn

- SOUTH SARPY EXPRESSWAY -

- NOTES -

GENERAL
This structure is designed in accordance with the AASHTO LRFD Bridge Design Specifications, 9th Edition, including subsequent interim revisions.

The Contractor may substitute any one of the alternate designs shown on the plans for the original design. All quantities are based on the original design and no additions or deductions will be allowed for the use of an alternate design.

The concrete bridge deck is designed by the empirical design method.

The superstructure and substructure are designed for a future wearing surface of three inches of asphalt, 35 psf.

The superstructure is designed for the allowance of stay-in-place forms (5 psf) between girders.

All dimensions shown are in horizontal plane only. No allowances have been made for vertical curve or roadway cross slope.

Unless noted "NOT TO SCALE", all details are drawn using a constant scale in accordance with NDOT Bridge Scaling Policy.

Girder shims that will be provided to the Contractor account for the dead load deflection due to weight of the slab, rail/barrier, wearing surface (if present), and median (if present) only. The Contractor is responsible for making the necessary adjustments for the specific forming system used to achieve the slab grades and elevations shown on the plans.

The shim shots may be taken before or after the turndowns and diaphragms are poured.

The finishing machine shall be supported by the girders of the phase that is being poured. When closure pours are required, the bridge finishing machine shall be supported on the completed Phase I and Phase II slabs.

SUBSTRUCTURE
Structural steel for all "H" piles shall conform to ASTM A709, Grade 50.

All other structural steel shall conform to the requirements of ASTM A709, Grade 36.

The Pay Item, "STRUCTURAL STEEL FOR SUBSTRUCTURE", shall include any of the following applicable items: tie rods and turnbuckles.

Tie Rods shall conform to ASTM A709, Grade 36 steel. Turnbuckles shall conform to ASTM A668, Class C.

After fabrication, all structural steel for substructure shall be galvanized according to ASTM A123.

CONCRETE & REINFORCEMENT
Concrete for slab, approach slabs, diaphragms, turndowns, and rails/barriers shall be Class "47BD", with a 28-day strength of 4,000 psi.

All other cast-in-place concrete shall be Class "47B" concrete, with a 28-day strength of 3,000 psi.

Chamfer all exposed edges of concrete.

Unless noted as "Optional", all construction joints shown are mandatory.

All reinforcing steel shall be epoxy coated and conform to the requirements of ASTM A615, Grade 60 steel.

The minimum clearance, measured from the face of the concrete to the surface of any reinforcing bar, shall be 3" for substructure elements and 2" for superstructure elements, except where otherwise noted.

Field bend and/or clip reinforcing bars to maintain minimum clearance. Epoxy coat clipped ends.

PRESTRESSED GIRDERS
The prestressed girders have been designed assuming 100% continuity at the interior supports for live load.

Prestressed concrete girders must be at least 9 days old before they can be set on the Bridge substructure.

Surveying for shim shots, forming the bridge deck, turndowns, diaphragms, and placing construction material on the girders is not allowed until the girders have reached design strength and are at least 30 days old.

All girder lines and spans, between expansion joints, shall be set before the shims are calculated.

Shim shots are valid for 60 days. If the deck is not placed within 60 days, shim shots must be retaken, shims may be adjusted, and all costs shall be subsidiary to the Pay Item "CLASS 47BD-4000 CONCRETE FOR BRIDGE".

The Contractor must provide any temporary intermediate diaphragms and/or bracing necessary to provide lateral and torsional stability for the girders during construction of the concrete slab.

The temporary intermediate diaphragms/bracing shall be removed after the concrete slab has attained 75% of its design strength. The cost for furnishing, installing, and removing the temporary intermediate diaphragms and/or bracing shall be subsidiary to the Pay Item, "CLASS 47BD-4000 CONCRETE FOR BRIDGE".

MISCELLANEOUS
All materials, equipment, tools, labor, and incidentals necessary to complete the work, not paid for directly, shall be considered subsidiary to other items for which payment is made.

Deck surface treatment shall be applied after bridge deck grooving is complete.

- QUANTITIES -

ABUTMENT NO. 1 EXCAVATION		-- LS
PIER NO. 1 EXCAVATION		-- LS
ABUTMENT NO. 2 EXCAVATION		-- LS
CLASS 47B-3000 CONCRETE FOR BRIDGE		-- CY
ABUTMENTS	-- CY	
PIER	-- CY	
CLASS 47BD-4000 CONCRETE FOR BRIDGE		-- CY
SLAB	-- CY	
HAUNCHES	-- CY	
CONCRETE RAILS	-- CY	
EPOXY COATED REINFORCING STEEL		-- LB
SLAB	-- LB	
CONCRETE RAILS	-- LB	
ABUTMENTS	-- LB	
PIER	-- LB	
PRECAST/PRESTRESSED CONCRETE SUPERSTRUCTURE AT STATION 112+46.01		-- LS
GIRDERS	-- CY	
STRUCTURAL STEEL FOR SUBSTRUCTURE		-- LB
TEST PILE		-- EA
HP 12 INCH X 53 LB STEEL PILING		-- LF
GRANULAR BACKFILL		-- CY
SUBSURFACE DRAINAGE MATTING		-- SY
EXPANSION BEARING, PTFE TYPE		-- EA
FIXED BEARING		-- EA
CONCRETE FOR PAVEMENT APPROACHES CLASS 47BD-4000		-- CY
SLABS	-- CY	
CONCRETE RAILS	-- CY	
EPOXY COATED REINFORCING STEEL FOR PAVEMENT APPROACHES		-- LB
SLABS	-- LB	
CONCRETE RAILS	-- LB	
PREFORMED EXPANSION JOINT, TYPE A		-- LF
8 FOOT WELDED WIRE FABRIC FENCE		-- LF
5 FOOT WELDED WIRE FABRIC FENCE		-- LF
BRIDGE DECK GROOVING		-- SY
1 1/2" CONDUIT IN BRIDGE		-- LF
2" CONDUIT IN BRIDGE		-- LF
3" CONDUIT IN BRIDGE		-- LF
CONCRETE SLOPE PROTECTION		-- SY
DECK SURFACE TREATMENT		-- SF
FURNISHING RESIN FOR FLOOD COAT		-- GAL

- INDEX -

GENERAL NOTES, QUANTITIES & INDEX	1
GENERAL PLAN & ELEVATION	2
COORDINATE LAYOUT	3
COORDINATE DATA	4
GEOLOGICAL PROFILE	5
PILE LAYOUT	6
PLAN & ELEVATION OF ABUTMENT	7
ABUTMENT DETAILS	8
ABUTMENT DETAILS & BILL OF BARS	9
PIER DETAILS (1 OF 4)	10
PIER DETAILS (2 OF 4)	11
PIER DETAILS (3 OF 4)	12
PIER DETAILS (4 OF 4)	13
GIRDER LAYOUT	14
NU 1600 GIRDER DETAILS	15
BEARING DETAILS	16
TYPICAL SECTION	17
SLAB REINFORCING LAYOUT	18
ABUTMENT TURNDOWN DETAILS	19
PIER DIAPHRAGM DETAILS	20
SLAB DETAILS	21
CONDUIT LAYOUT	22
CONDUIT DETAILS	23
CONCRETE SLOPE PROTECTION DETAILS	24
APPROACH SLAB DETAILS (1 OF 3)	25
APPROACH SLAB DETAILS (2 OF 3)	26
APPROACH SLAB DETAILS (3 OF 3)	27
CONCRETE RAIL DETAILS	28
WELDED WIRE FABRIC FENCE DETAILS (1 OF 2)	29
WELDED WIRE FABRIC FENCE DETAILS (2 OF 2)	30
BILL OF BARS	31
BENDING DIAGRAMS	32

SHOP PLANS FOR REVIEW:
- Prestressed Concrete Superstructure
- Substructure Steel (Tie Rods)
- Bearing Devices
- Bridge Mounted Fencing

SHOP PLANS FOR RECORD:
- Stay-in-Place Forms

PRELIMINARY PLAN
NOT FINAL - SUBJECT TO CHANGE

HDR Engineering Inc.
1917 South 67th Street
Omaha, NE 68106
Office: 402-399-1000
Nebraska C.O.A. CA-0443

S32

PROJECT NUMBER
C-77 (25-15)

C.N.

LOCATION
SOUTH SARPY EXPRESSWAY

STRUCTURE NUMBER

GENERAL NOTES, QUANTITIES & INDEX
238'-0" 2-SPAN PRESTRESSED CONCRETE GIRDER BRIDGE (NU1600)

SKEW 20° RHB
ROADWAY Varies WB\Varies EB
FHWA CONST. TYPE X281
DESIGN LIVE LOAD HL-93
DESIGN CODE LRFD 9th Edition
STA. 112+46.01
REF. POST. ---
HWY. NO. ---
COUNTY SARPY

Q.C. ENGINEER: M. Wagner-Loos DATE MARCH 2026
DESIGNED BY: R. Paradis DETAILED BY: T. Sas

SPECIAL PLAN NO. 2

1/32

Computer: 2MQ5130W92
Date: 13-FEB-2026 11:23
File: NDOT_2D_SP2.dgn

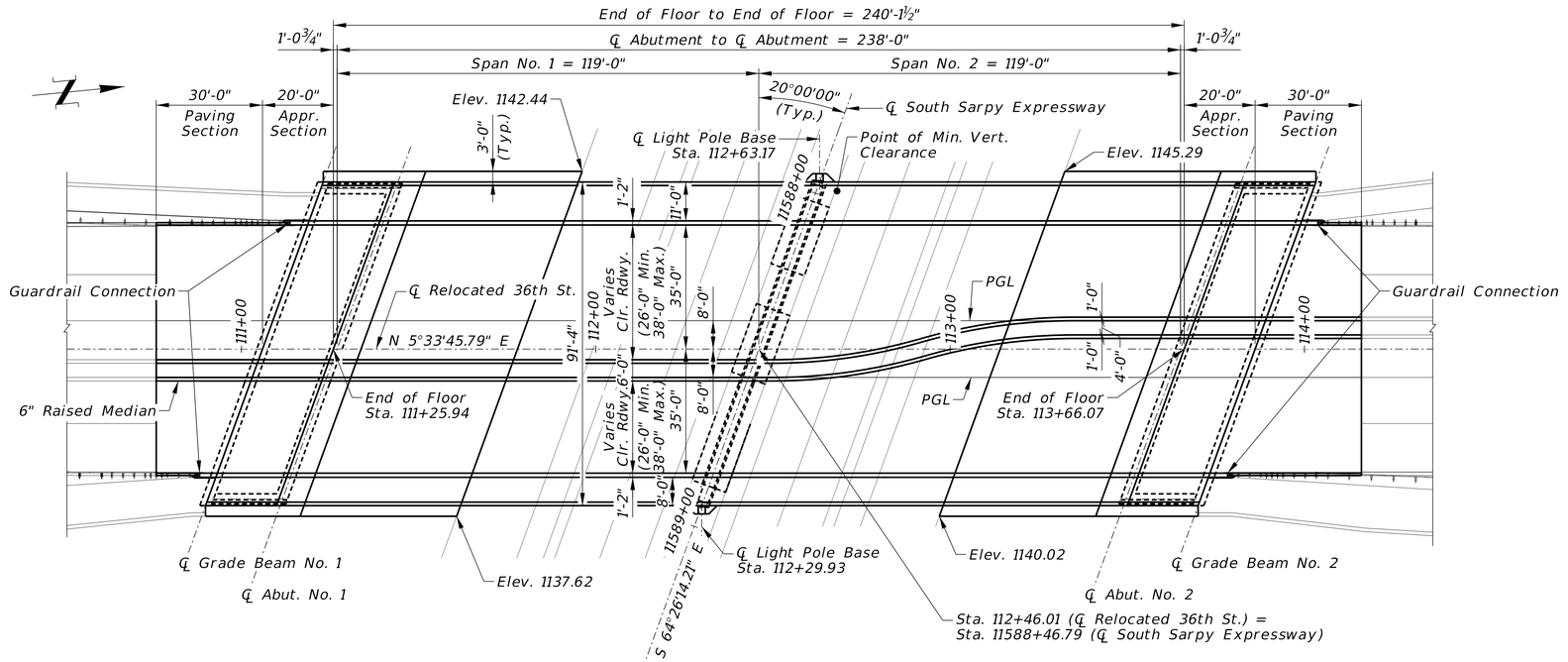

GENERAL PLAN

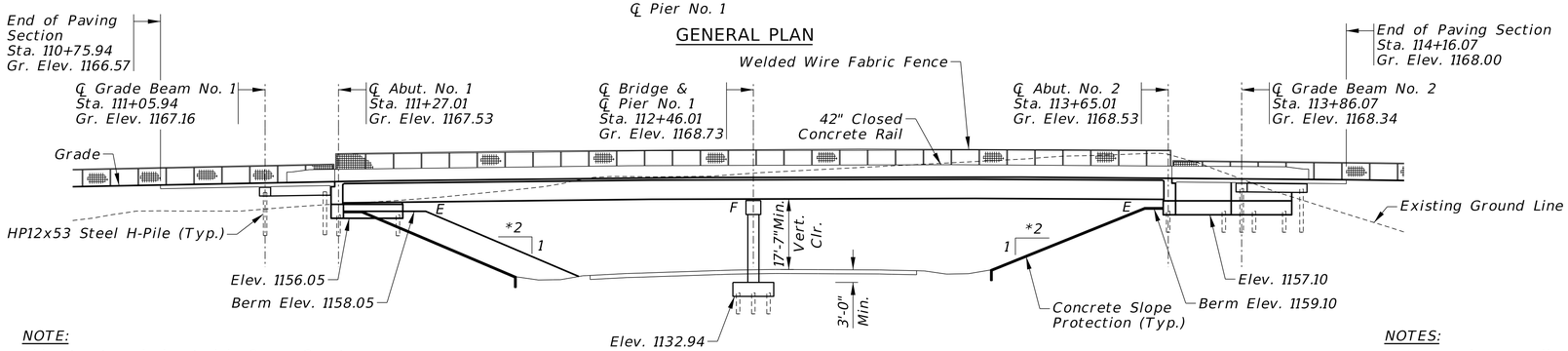

NOTE:

This structure is located in Sarpy County on South Sarpy Expressway in Sect. 21, T13N, R13E.

NOTES:

* Measured perpendicular to ℄ Abutment.

Grade elevations shown are at Profile Grade Line (PGL) along ℄ South Sarpy Expressway. Stations shown are at ℄ South Sarpy Expressway.

SECTIONAL ELEVATION

(Shown along ℄ Relocated 36th St.)

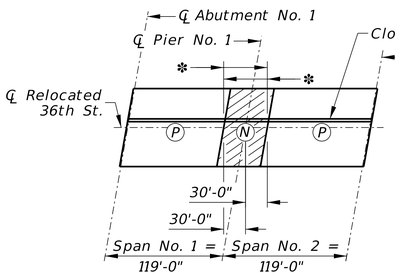

POURING SEQUENCE:

Contractor shall maintain a minimum placement and finishing rate of at least 49.7 feet/hour along ℄ Bridge. This assumes the slab is poured in phases as detailed on the Typical Section sheet. Should the Contractor not possess the necessary equipment and facilities to maintain the minimum placement and finishing rate, the slab shall be placed in sections. All Positive moment sections of the slab shall be placed followed by placement of the Negative moment sections of the slab. Alternate procedures for placing deck concrete may be submitted for approval by the Contractor.

(P) = Positive moment section
(N) = Negative moment section

✻ *Optional Construction Joints (Pour in direction of arrows)*

POURING DIAGRAM

Not to Scale

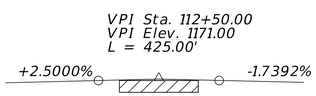

PROFILE GRADE (Relocated 36th St.)

Not to Scale

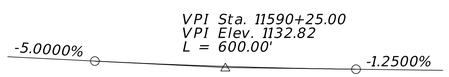

PROFILE GRADE (South Sarpy Expressway)

Not to Scale

TRAFFIC DATA (Relocated 36th St.)		
YEAR	2024	2050
ADT	2,500	19,150
DHV	300	1,915
HEAVY TRUCKS	3%	4%

PRELIMINARY PLAN
NOT FINAL - SUBJECT TO CHANGE

HDR Engineering Inc.
1917 South 67th Street
Omaha, NE 68106
Office: 402-399-1000
Nebraska C.O.A. CA-0443

S33

PROJECT NUMBER C-77 (25-15)

C.N.

LOCATION
SOUTH SARPY EXPRESSWAY

STRUCTURE NUMBER

GENERAL PLAN & ELEVATION
238'-0" 2-SPAN PRESTRESSED CONCRETE GIRDER BRIDGE (NU1600)

COUNTY SARPY
HWY. NO. ---
REF. POST. ---
STA. 112+46.01
DESIGN CODE LRFD 9th Edition

SKEW 20° RHB
ROADWAY Varies WB/Varies EB
FHWA CONST. TYPE X281
DESIGN LIVE LOAD HL-93

DESIGNED BY: R. Paradis
DETAILED BY: S. Saab
Q.C. ENGINEER: K. Devkota
DATE MARCH 2026

SPECIAL PLAN NO. 2

2 / 32

Computer: 2MQ5130W92
Date: 13-FEB-2026 11:23
File: NDOT_2D_SP2.dgn

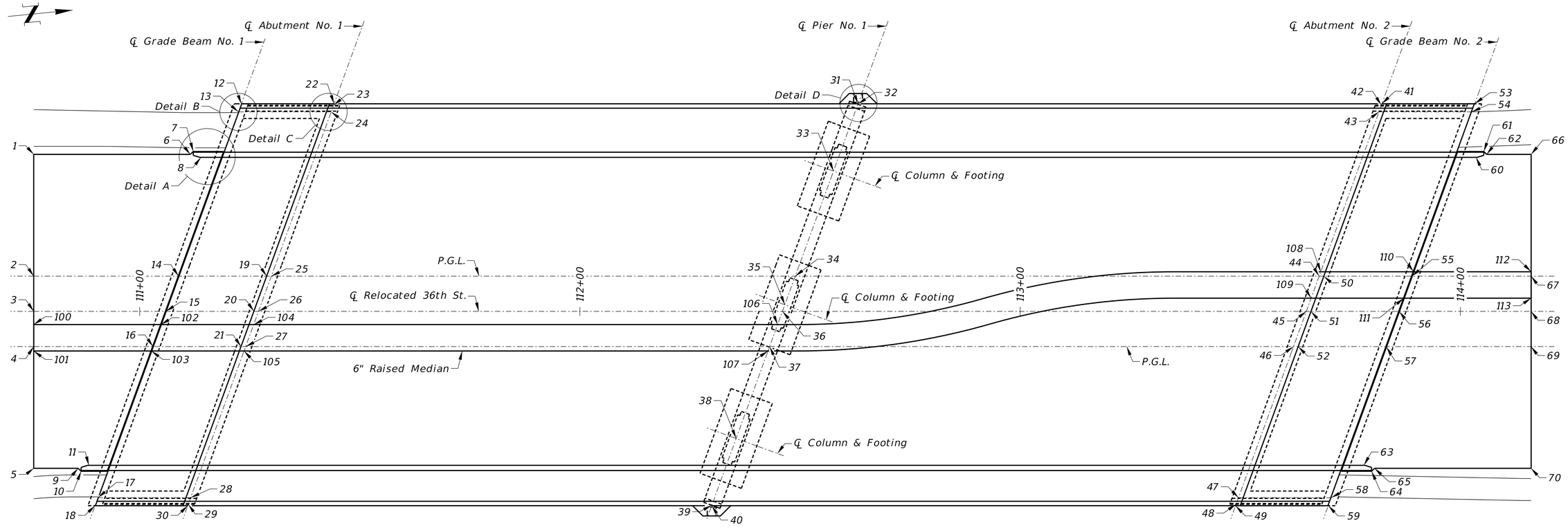

COORDINATE LAYOUT

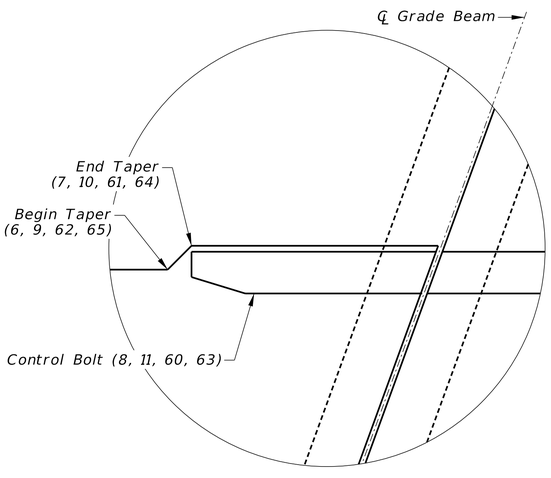

DETAIL A

Not to Scale

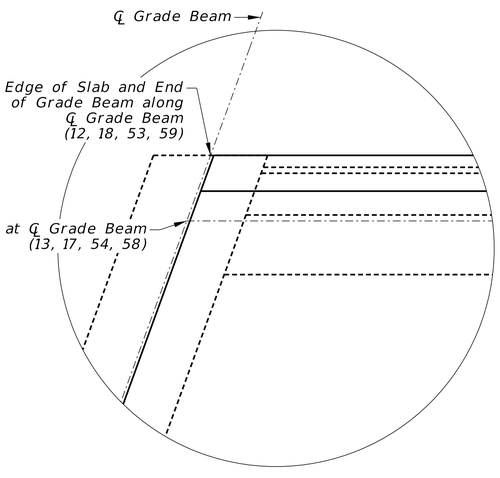

DETAIL B

Not to Scale

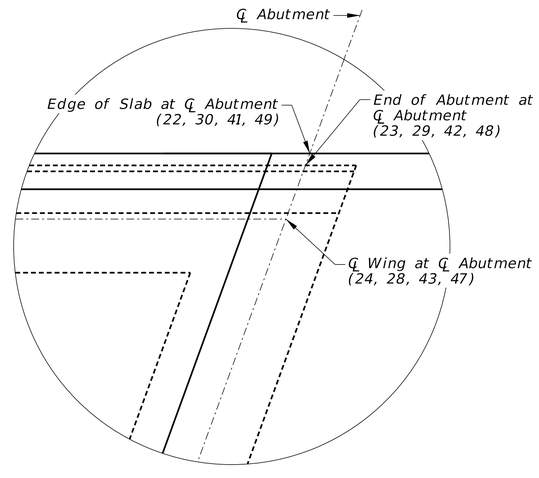

DETAIL C

Not to Scale

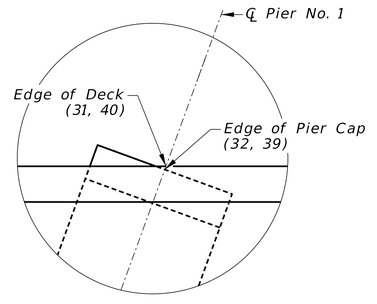

DETAIL D

(Light Pole Foundation not shown for clarity)
Not to Scale

DATUM INFORMATION	
HORIZONTAL	VERTICAL
NAD 83 (1995)	NAVD 88

D.A.F. = 1.00037037
UNITS = US SURVEY FEET

NOTES:
For Coordinate Data, see Sheet 4.
X = Easting
Y = Northing

CONTROL POINTS

POINT	STATION	OFFSET TO STA. (FEET)	X COORDINATE	Y COORDINATE
1134	11587+82.41	231.33 Lt.	2755228.45	483674.13
1207	11564+19.71	1024.95 Rt.	2752554.94	483560.33

PRELIMINARY PLAN
NOT FINAL - SUBJECT TO CHANGE

HDR Engineering Inc.
1917 South 67th Street
Omaha, NE 68106
Office: 402-399-1000
Nebraska C.O.A. CA-0443

S34

PROJECT NUMBER
C-77 (25-15)

C.N.

LOCATION
SOUTH SARPY EXPRESSWAY

STRUCTURE NUMBER

COORDINATE LAYOUT

238'-0" 2-SPAN PRESTRESSED CONCRETE GIRDER BRIDGE (NU1600)

DESIGNED BY: M. Wagner-Loos DETAILED BY: T. Sas Q.C. ENGINEER: K. Devkota DATE MARCH 2026

COUNTY SARPY SKEW 20° RHB
HWY. NO. --- ROADWAY Varies WB/Varies EB
REF. POST. --- FHWA CONST. TYPE X281
STA. 112+46.01 DESIGN LIVE LOAD HL-93
DESIGN CODE LRFD 9th Edition

SPECIAL PLAN NO. 2

3/32

Computer: 2MQ5130W92
Date: 13-FEB-2026 11:23
File: NDOT_2D_SP2.dgn

STATIONING OFFSETS & COORDINATES

POINT	STATION	OFFSET TO STA. (FEET)	X COORDINATE	Y COORDINATE
1	110+75.94	35.00 Lt.	2755135.3884	483271.7979
2	110+75.94	8.00 Lt.	2755162.2613	483269.1806
3	110+75.94	0.00	2755170.2236	483268.4051
4	110+75.94	8.00 Rt.	2755178.1859	483267.6296
5	110+75.94	35.00 Rt.	2755205.0588	483265.0124
6	111+11.56	35.71 Lt.	2755138.1357	483307.3128
7	111+12.18	36.33 Lt.	2755137.5742	483307.9954
8	111+13.93	35.00 Lt.	2755139.0709	483309.6079
9	110+86.08	35.71 Rt.	2755206.7463	483275.0320
10	110+86.70	36.33 Rt.	2755207.4290	483275.5935
11	110+88.45	35.00 Rt.	2755206.2715	483277.4645
12	111+23.11	47.17 Lt.	2755127.8512	483319.9224
13	111+22.44	45.33 Lt.	2755129.6112	483319.0805
14	111+08.85	8.00 Lt.	2755165.4516	483301.9374
15	111+05.94	0.00	2755173.1317	483298.2639
16	111+03.03	8.00 Rt.	2755180.8117	483294.5903
17	110+90.53	42.33 Rt.	2755213.7720	483278.8247
18	110+89.87	44.17 Rt.	2755215.5321	483277.9829
19	111+28.85	8.00 Lt.	2755167.3903	483321.8432
20	111+25.94	0.00	2755175.0704	483318.1697
21	111+23.03	8.00 Rt.	2755182.7504	483314.4961
22	111+44.17	47.17 Lt.	2755129.8931	483340.8874
23	111+44.05	46.83 Lt.	2755130.2131	483340.7343
24	111+43.51	45.33 Lt.	2755131.6531	483340.0455
25	111+29.92	8.00 Lt.	2755167.4934	483322.9024
26	111+27.01	0.00	2755175.1735	483319.2288
27	111+24.09	8.00 Rt.	2755182.8536	483315.5553
28	111+11.60	42.33 Rt.	2755215.8139	483299.7897

STATIONING OFFSETS & COORDINATES

POINT	STATION	OFFSET TO STA. (FEET)	X COORDINATE	Y COORDINATE
29	111+11.05	43.83 Rt.	2755217.2539	483299.1009
30	111+10.93	44.17 Rt.	2755217.5739	483298.9479
31	112+63.17	47.17 Lt.	2755141.4284	483459.3270
32	112+63.14	47.08 Lt.	2755141.5163	483459.2849
33	112+57.61	31.88 Lt.	2755156.1005	483452.3090
34	112+48.92	8.00 Lt.	2755179.0287	483441.3420
35	112+46.55	1.50 Lt.	2755185.2688	483438.3572
36	112+46.01	0.00	2755186.7088	483437.6884
37	112+43.09	8.00 Rt.	2755194.3889	483433.9949
38	112+35.48	28.88 Rt.	2755214.4371	483424.4054
39	112+29.96	44.08 Rt.	2755229.0213	483417.4295
40	112+29.93	44.17 Rt.	2755229.1092	483417.3875
41	113+82.17	47.17 Lt.	2755152.9637	483577.7665
42	113+82.05	46.83 Lt.	2755153.2837	483577.6135
43	113+81.51	45.33 Lt.	2755154.7237	483576.9247
44	113+67.92	8.00 Lt.	2755190.5640	483559.7815
45	113+65.01	0.00	2755198.2441	483556.108
46	113+62.09	8.00 Rt.	2755205.9242	483552.4345
47	113+49.60	42.33 Rt.	2755238.8845	483536.6689
48	113+49.05	43.83 Rt.	2755240.3245	483535.9801
49	113+48.93	44.17 Rt.	2755240.6445	483535.8271
50	113+68.98	8.00 Lt.	2755190.6672	483560.8407
51	113+66.07	0.00	2755198.3473	483557.1672
52	113+63.16	8.00 Rt.	2755206.0274	483553.4937
53	114+03.24	47.17 Lt.	2755155.0056	483598.7315
54	114+02.57	45.33 Lt.	2755156.7656	483597.8897
55	113+88.98	8.00 Lt.	2755192.6059	483580.7465
56	113+86.07	0.00	2755200.2860	483577.073

STATIONING OFFSETS & COORDINATES

POINT	STATION	OFFSET TO STA. (FEET)	X COORDINATE	Y COORDINATE
57	113+83.16	8.00 Rt.	2755207.9661	483573.3995
58	113+70.66	42.33 Rt.	2755240.9264	483557.6339
59	113+70.00	44.17 Rt.	2755242.6864	483556.792
60	114+03.56	35.00 Lt.	2755167.1461	483597.8723
61	114+05.31	36.33 Lt.	2755165.9887	483599.7433
62	114+05.93	35.71 Lt.	2755166.6713	483600.3048
63	113+78.08	35.00 Rt.	2755234.3467	483565.7289
64	113+79.83	36.33 Rt.	2755235.8434	483567.3414
65	113+80.46	35.71 Rt.	2755235.2820	483568.0241
66	114+16.07	35.00 Lt.	2755168.3589	483610.3245
67	114+16.07	8.00 Lt.	2755195.2317	483607.7072
68	114+16.07	0.00	2755203.1940	483606.9317
69	114+16.07	8.00 Rt.	2755211.1564	483606.1562
70	114+16.07	35.00 Rt.	2755238.0292	483603.539
100	110+75.94	3.00 Rt.	2755173.2095	483268.1143
101	110+75.94	9.00 Rt.	2755179.1812	483267.5327
102	111+04.85	3.00 Rt.	2755176.0117	483296.8863
103	111+02.67	9.00 Rt.	2755181.7717	483294.1311
104	111+25.91	3.00 Rt.	2755178.0535	483317.8513
105	111+23.73	9.00 Rt.	2755183.8136	483315.0961
106	112+44.91	3.00 Rt.	2755189.5888	483436.2908
107	112+42.73	9.00 Rt.	2755195.3489	483433.5357
108	113+68.28	9.00 Lt.	2755189.6040	483560.2407
109	113+66.10	3.00 Lt.	2755195.3641	483557.4856
110	113+89.35	9.00 Lt.	2755191.6459	483581.2057
111	113+87.16	3.00 Lt.	2755197.4060	483578.4506
112	114+16.07	9.00 Lt.	2755194.2364	483607.8041
113	114+16.07	3.00 Lt.	2755200.2082	483607.2225

NOTES:
X = Easting
Y = Northing
For Coordinate Layout, see Sheet 3.

S35

PROJECT NUMBER
C-77 (25-15)

C.N.

LOCATION
SOUTH SARPY EXPRESSWAY

STRUCTURE NUMBER

238'-0" 2-SPAN PRESTRESSED CONCRETE GIRDER BRIDGE (NU1600)
COORDINATE DATA

SKEW 20° RHB
ROADWAY Varies WB/Varies EB
FHWA CONST. TYPE X281
DESIGN LIVE LOAD HL-93
DESIGN CODE LRFD 9th Edition
REF. POST. ---
STA. 112+46.01
HWY. NO. ---
COUNTY SARPY

Q.C. ENGINEER: K. Devkota
DATE MARCH 2026
DETAILED BY: T. Sas
DESIGNED BY: M. Wagner-Loos

PRELIMINARY PLAN
NOT FINAL - SUBJECT TO CHANGE

HDR Engineering Inc.
1917 South 67th Street
Omaha, NE 68106
Office: 402-399-1000
Nebraska C.O.A. CA-0443

SPECIAL PLAN NO. 2

4/32

Computer: 2MQ5130W92
Date: 13-FEB-2026 11:23
File: NDOT_2D_SP2.dgn

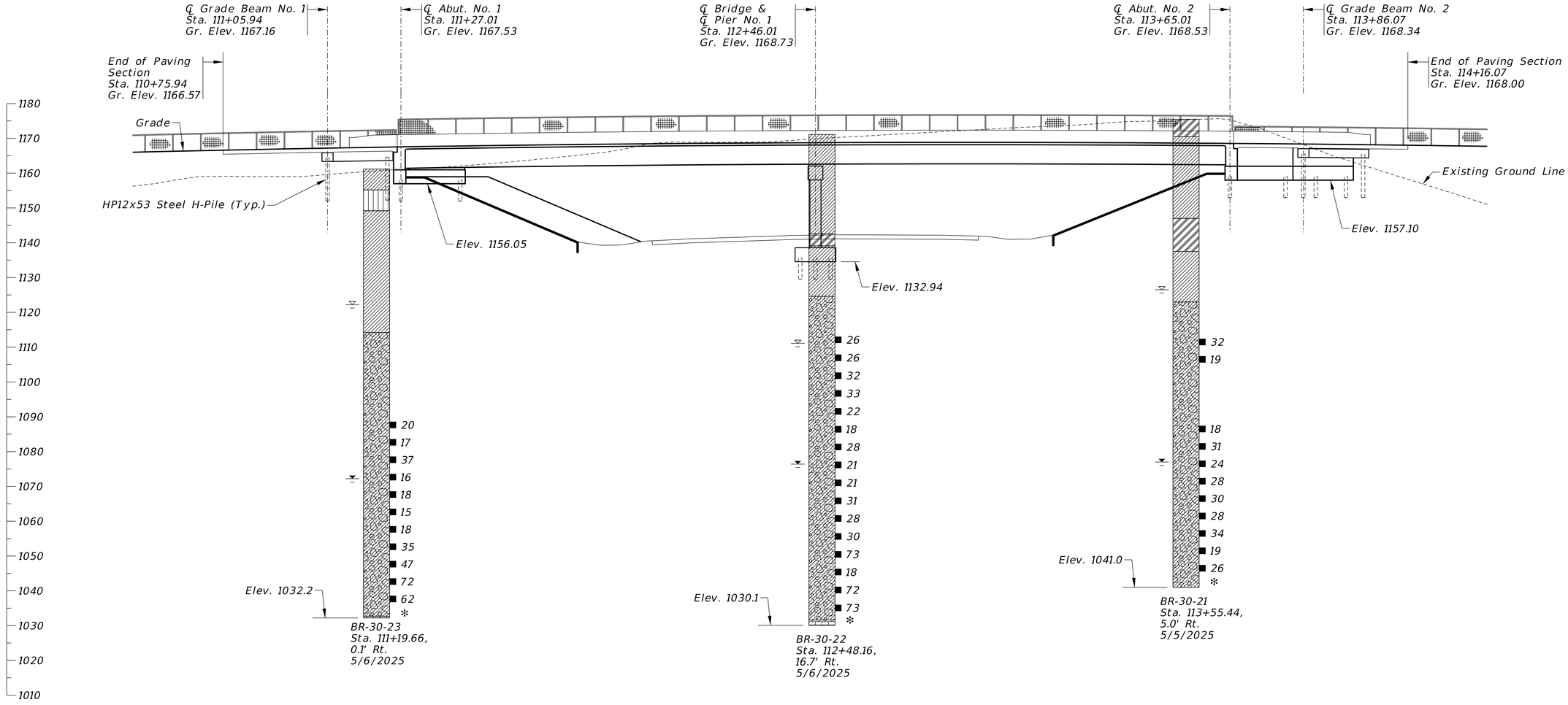

GEOLOGICAL PROFILE

GEOLOGICAL LEGEND

CH | CL | LIMESTONE | ML | TILL

Water Level While Drilling

Water Level at End of Drilling

BORINGS
The borings, as logged on the plans, represent the character of the subsoil at the location indicated. No guarantee is made that the subsoil conditions vary uniformly between or outside the given location.

Figures beside the column of borings indicate the number of blows required to drive a standard penetrometer, of 2" O.D., the second and third 6 inches using a 140 lb. weight falling 30 inches, in accordance with ASTM D1586 procedures.

* *Indicates refusal, greater than 50 blows in 6 inches*

I, Jacob Sellin, reviewed the geological notes, boring data, pile data, and pile details.

PROFESSIONAL CIVIL ENGINEER
JACOB P. SELLIN
E-20722
STATE OF NEBRASKA

PRELIMINARY PLAN
NOT FINAL - SUBJECT TO CHANGE

HDR Engineering Inc.
1917 South 67th Street
Omaha, NE 68106
Office: 402-399-1000
Nebraska C.O.A. CA-0443

S36

PROJECT NUMBER
C-77 (25-15)

C.N.

LOCATION
SOUTH SARPY EXPRESSWAY

STRUCTURE NUMBER

GEOLOGICAL PROFILE
238'-0" 2-SPAN PRESTRESSED CONCRETE GIRDER BRIDGE (NU1600)

SKEW 20° RHB
ROADWAY Varies WB/Varies EB
FHWA CONST. TYPE X281
DESIGN LIVE LOAD HL-93
DESIGN CODE LRFD 9th Edition

COUNTY SARPY
HWY. NO. ---
REF. POST. ---
STA. 112+46.01

DESIGNED BY: R. Paradis
DETAILED BY: E. Sorens
Q.C. ENGINEER: K. Devkota
DATE MARCH 2026

SPECIAL PLAN NO. 2

5/32

Computer: 2MQS130W92
Date: 13-FEB-2026 11:23
File: NDOT_2D_SP2.dgn

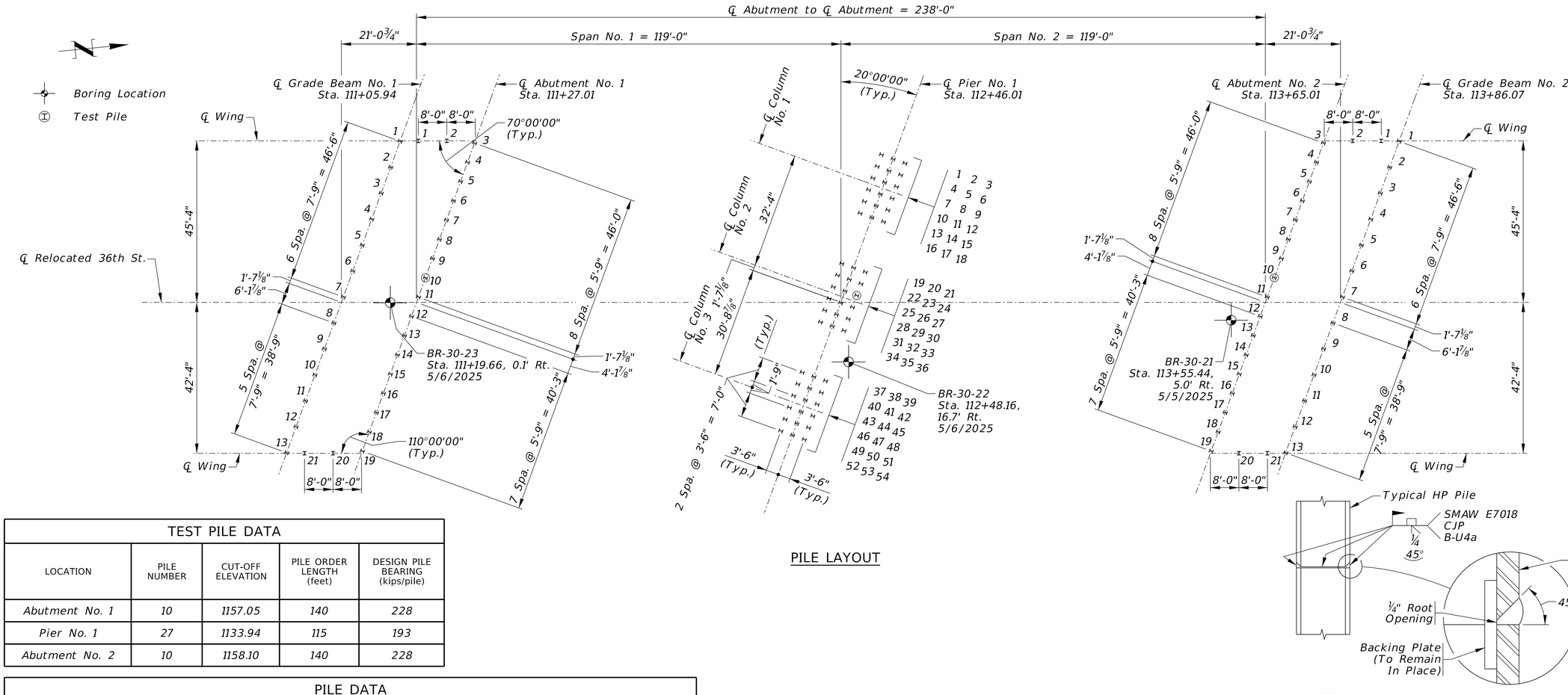

PILE LAYOUT

TEST PILE DATA

LOCATION	PILE NUMBER	CUT-OFF ELEVATION	PILE ORDER LENGTH (feet)	DESIGN PILE BEARING (kips/pile)
Abutment No. 1	*10*	*1157.05*	*140*	*228*
Pier No. 1	*27*	*1133.94*	*115*	*193*
Abutment No. 2	*10*	*1158.10*	*140*	*228*

PILE DATA

LOCATION	PILE NUMBER	CUT-OFF ELEVATION	MINIMUM PENETRATION BELOW CUT-OFF (feet)	TENTATIVE PILE ORDER LENGTH (feet)	PILE ORDER LENGTH (feet)	DESIGN PILE BEARING (kips/pile)	PILE TYPE
Grade Beam No. 1	*1, 2*	*1163.97*		*80*		*140*	*HP12x53*
	3, 4	*1164.18*					
	5-7	*1164.47*					
	8, 9	*1164.34*					
	10, 11	*1163.95*					
	12, 13	*1163.55*					
Abutment No. 1	*1, 2, 20, 21*	*1159.05*		*130*		*228*	*HP12x53*
	3-9, 11-19	*1157.05*					
Pier No. 1	*1-26, 28-54*	*1133.94*		*105*		*193*	*HP12x53*
Abutment No. 2	*1, 2, 20, 21*	*1160.10*		*130*		*228*	*HP12x53*
	3-9, 11-19	*1158.10*					
Grade Beam No. 2	*1, 2*	*1164.77*		*80*		*140*	*HP12x53*
	3, 4	*1165.12*					
	5, 6	*1165.46*					
	7, 8	*1165.63*					
	9, 10	*1165.45*					
	11-13	*1165.21*					

NOTE:
See "FIELD WELDING GUIDE" for Steel Pile Splice welding requirements and procedure. The Guide is located under "PROJECT MANAGER RESOURCES" on the NDOT Website.

STANDARD PILE SPLICE

NOTES:
All pile spacing is given at the bottom of concrete.

Prefabricated cast steel points will be required on all HP piles in this structure. They shall conform to the requirements of ASTM A27 Grade 70-36 or ASTM A148 Grade 90-60 and be listed on the NDOT Approved Products List.

Paragraphs 1.a & 1.b of Subsection 703.03 of the Standard Specifications shall be revised to require the Contractor to perform the wave equation analysis and shall submit the results of the analysis including the Hammer Data sheet to the Engineer for review and approval. The analysis shall be sealed by a professional engineer licensed in the state of Nebraska.

Test piles shall be driven, as shown in the TEST PILE DATA table.

Pile order lengths, except for those shown for the test piles, are tentative. The final order lengths shall be based on the results obtained from the test pile driving.

The driving of the test pile will be monitored with a Pile Driving Analyzer. The use of the Pile Driving Analyzer will require the Contractor to set up the hammer for driving. The Contractor shall bolt two accelerometers and two strain transducers to the pile before driving is started.

The holes or anchors for the accelerometers and strain transducers will have been predrilled by Third-Party Testing Agency personnel while the pile is still on the ground. The Contractor may be required to stop the hammer for wave speed determination after the first few blows.

The Contractor shall drive the pile until the transducers are near the surface of the ground, or as directed by the Engineer, at which time the Contractor shall stop the hammer for the removal of the accelerometers and strain transducers. The Contractor shall then continue driving the pile to cut-off or as directed by the Engineer.

The time delay in driving each pile being monitored by the Pile Driving Analyzer will normally range from 30 to 60 minutes.

The Contractor shall provide access to the pile driving area for the Third-Party Testing Agency equipment vehicle (light truck). The work performed by the Contractor, in conjunction with the use of the Pile Driving Analyzer, as described herein, shall not be paid for directly, but shall be considered subsidiary to items for which direct payment is made.

Final order lengths will be provided by the Engineer to the Contractor within three working days after the test pile.

I, Jacob Sellin, reviewed the geological notes, boring data, pile data, and pile details.

PROFESSIONAL CIVIL ENGINEER ★ JACOB P. SELLIN E-20722 ★ STATE OF NEBRASKA

PRELIMINARY PLAN
NOT FINAL - SUBJECT TO CHANGE

HDR Engineering Inc.
1917 South 67th Street
Omaha, NE 68106
Office: 402-399-1000
Nebraska C.O.A. CA-0443

S37

PROJECT NUMBER
C-77 (25-15)

C.N.

LOCATION
SOUTH SARPY EXPRESSWAY

STRUCTURE NUMBER

PILE LAYOUT
℄ Abutment to ℄ Abutment = 238'-0" 2-SPAN PRESTRESSED CONCRETE GIRDER BRIDGE (NU1600)

SKEW 20° RHB
ROADWAY Varies WB/Varies EB
FHWA CONST. TYPE X081
DESIGN LIVE LOAD HL-93
DESIGN CODE LRFD 9th Edition
STA. 112+46.01
REF. POST. ---
HWY. NO. ---
COUNTY SARPY

Q.C. ENGINEER: K. Devkota
DATE MARCH 2026
DESIGNED BY: R. Paradis
DETAILED BY: E. Sorens

SPECIAL PLAN NO. 2

6 / 32

Computer: 2NQ5130W92
Date: 9-DEC-2025 08:53
File: NDOT_2D_SP2.dgn

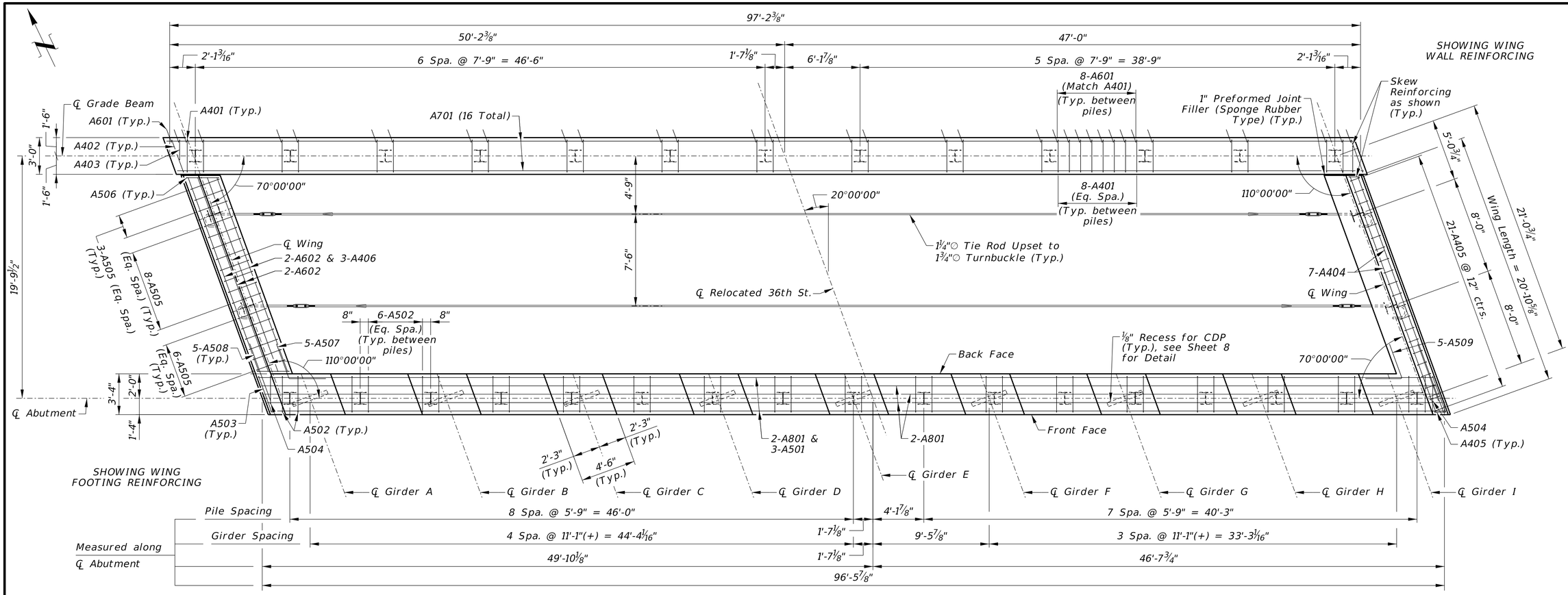

PLAN OF ABUTMENT

(Showing Abutment No. 2, Abutment No. 1 similiar)

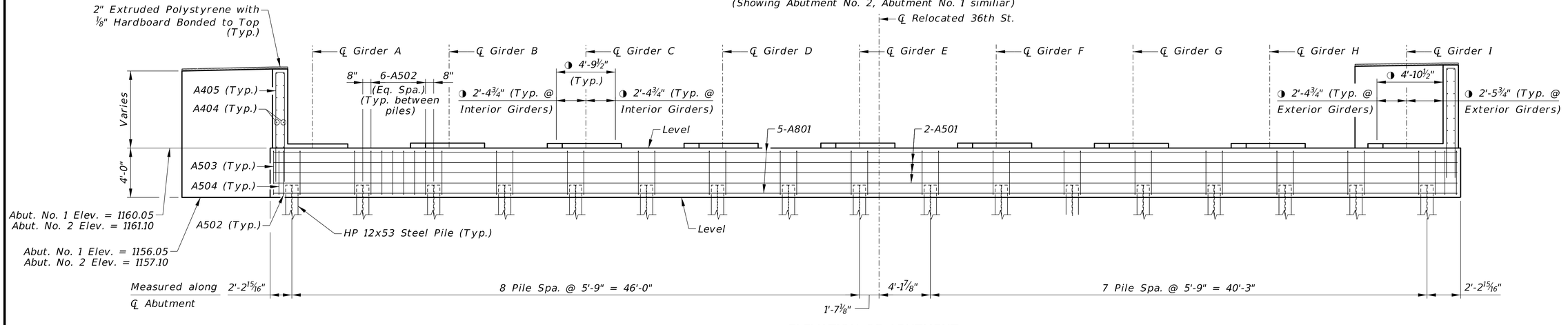

ELEVATION OF ABUTMENT

(Showing Abutment No. 2, Abutment No. 1 similiar)

GIRDER SEAT ELEVATIONS

Location	Girder A	Girder B	Girder C	Girder D	Girder E	Girder F	Girder G	Girder H	Girder I
Abutment No. 1	1160.81	1160.96	1161.11	1161.26	1161.41	1161.20	1160.93	1160.66	1160.38
Abutment No. 2	1161.43	1161.68	1161.92	1162.16	1162.40	1162.28	1162.10	1161.91	1161.73

NOTE:

◑ MEasured along ℄ Abutment.

PRELIMINARY PLAN
NOT FINAL - SUBJECT TO CHANGE

HDR Engineering Inc.
1917 South 67th Street
Omaha, NE 68106
Office: 402-399-1000
Nebraska C.O.A. CA-0443

S38

PROJECT NUMBER C-77 (25-15)

C.N.

LOCATION SOUTH SARPY EXPRESSWAY

STRUCTURE NUMBER

PLAN & ELEVATION OF ABUTMENT

238'-0" 2-SPAN PRESTRESSED CONCRETE GIRDER BRIDGE (NU1600)

SKEW 20° RHB
ROADWAY Varies WB/Varies EB
FHWA CONST. TYPE X281
DESIGN LIVE LOAD HL-93
DESIGN CODE LRFD 9th Edition
COUNTY SARPY
HWY. NO. ---
REF. POST. ---
STA. 112+46.01

DESIGNED BY: M. Wagner-Loos DETAILED BY: T. Sas
Q.C. ENGINEER: R. Paradis DATE MARCH 2026

SPECIAL PLAN NO. 2

7 / 32

COMPUTER$$$$
DATE$$$$$$$$$$$$$$$
DGNSPEC$$$$$$$$$$$$$

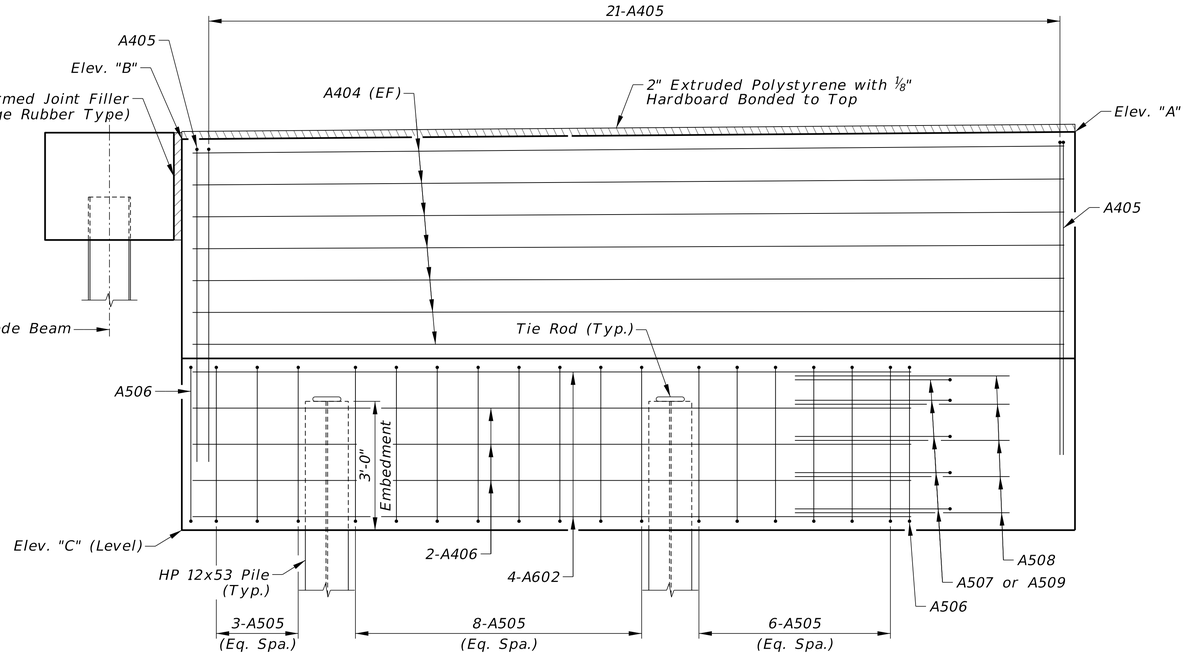

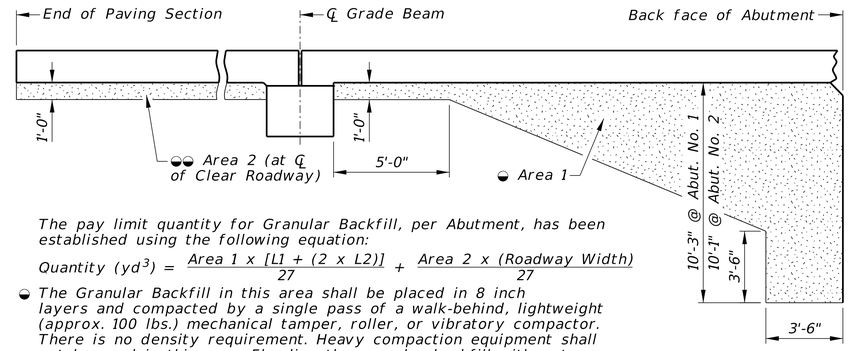

The pay limit quantity for Granular Backfill, per Abutment, has been established using the following equation:

$$\text{Quantity } (yd^3) = \frac{\text{Area 1 x [L1 + (2 x L2)]}}{27} + \frac{\text{Area 2 x (Roadway Width)}}{27}$$

◒ The Granular Backfill in this area shall be placed in 8 inch layers and compacted by a single pass of a walk-behind, lightweight (approx. 100 lbs.) mechanical tamper, roller, or vibratory compactor. There is no density requirement. Heavy compaction equipment shall not be used in this area. Flooding the granular backfill with water is not allowed.

◒◒ The Granular Backfill in this area shall be compacted in accordance with the Standard Specifications.

SECTION G1
Not to Scale

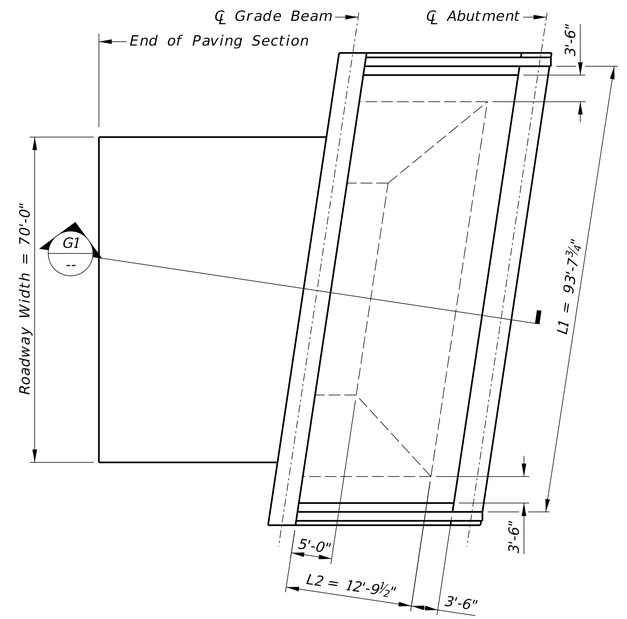

PLAN OF GRANULAR BACKFILL
Not to Scale

TOP OF WING ELEVATION
(Top of Concrete)

Location		Elev. "A"	Elev. "B"	Elev. "C"
Abutment No. 1	West Wing	1165.69	1165.37	1156.05
	East Wing	1165.23	1164.84	
Abutment No. 2	West Wing	1166.28	1166.06	1157.10
	East Wing	1166.59	1166.44	

ELEVATION OF WING

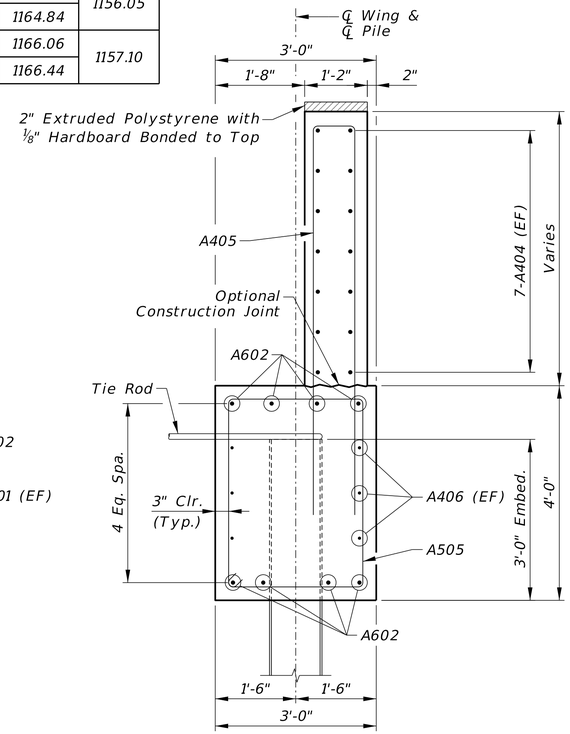

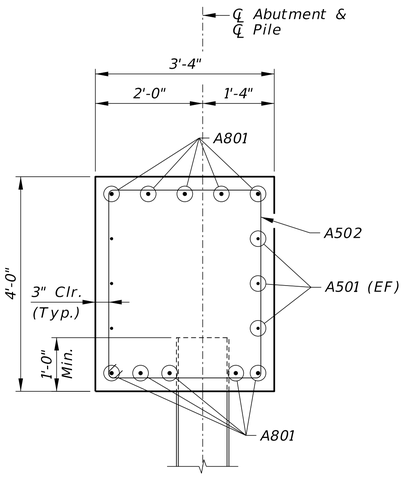

ABUTMENT SECTION

WING SECTION

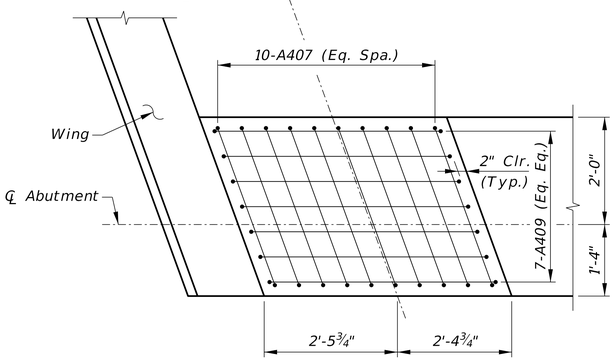

PLAN OF EXTERIOR ABUTMENT PEDESTAL
(Showing Abutment No. 2, Girder A, other locations similar)

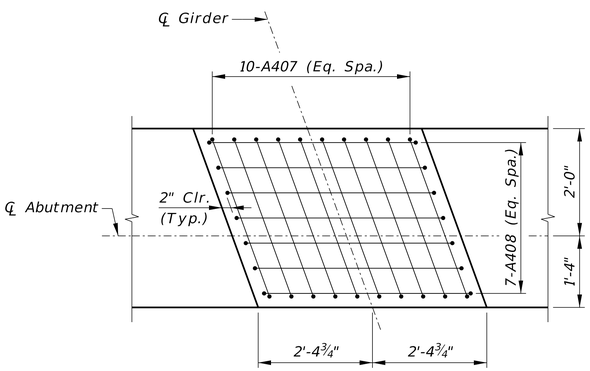

PLAN OF INTERIOR ABUTMENT PEDESTAL

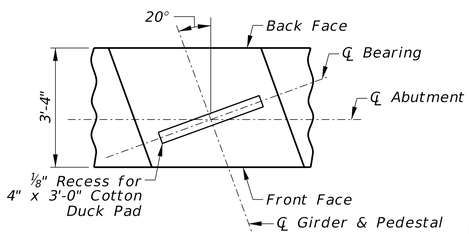

PLACEMENT OF RECESSES FOR CDP
AT ABUTMENT
Not to Scale

PRELIMINARY PLAN
NOT FINAL - SUBJECT TO CHANGE

HDR Engineering Inc.
1917 South 67th Street
Omaha, NE 68106
Office: 402-399-1000
Nebraska C.O.A. CA-0443

S39

PROJECT NUMBER
C-77 (25-15)

C.N.

LOCATION
SOUTH SARPY EXPRESSWAY

STRUCTURE NUMBER

238'-0" 2-SPAN PRESTRESSED CONCRETE GIRDER BRIDGE (NU1600)

ABUTMENT DETAILS

COUNTY SARPY
HWY. NO. ---
REF. POST. ---
STA. 112+46.01
DESIGN CODE LRFD 9th Edition

SKEW 20° RHB
ROADWAY Varies WB/Varies EB
FHWA CONST. TYPE X281
DESIGN LIVE LOAD HL-93

DESIGNED BY: M. Wagner-Loos DETAILED BY: T. Sas
Q.C. ENGINEER: R. Paradis DATE MARCH 2026

SPECIAL PLAN NO. 2

8/32

Computer: 2MQS130W92
Date: 13-FEB-2026 11:24
File: NDOT_2D_SP2.dgn

BILL OF BARS

	MARK	NUMBER OF BARS	LENGTH	TYPE	A	B	C	D	E	F	PIN Ø	HOOK	WEIGHT (LB)
ONE ABUTMENT	A801	10	101'-7"	STR.	Includes 1 - 5'-8" lap								2712
	A701	16	101'-8"	STR.	Includes 1 - 5'-0" lap								3325
	A601	101	3'-0"	101	1'-6"	1'-6"	1'-1"				4½"		455
	A602	16	17'-0"	STR.									409
	A501	6	99'-7"	STR.	Includes 1 - 3'-7" lap								623
	A502	98	13'-7"	107	3'-6"	2'-10"					2½"	5½"	1388
	A503	2	13'-11"	107	3'-6"	3'-0"					2½"	5½"	29
	A504	2	12'-9"	107	3'-6"	2'-5"					2½"	5½"	27
	A505	34	12'-11"	107	3'-6"	2'-6"					2½"	5½"	458
	A506	4	13'-1"	107	3'-6"	2'-7"					2½"	5½"	55
	A507	5	6'-0"	105	3'-0"	3'-0"	1'-0"				2½"		31
	A508	10	6'-0"	STR.									63
	A509	5	6'-0"	127	3'-0"	3'-0"	1'-0"				2½"		31
	A401	98	9'-9"	107	2'-0"	2'-6"					2"	4½"	638
	A402	2	9'-11"	107	2'-0"	2'-7"					2"	4½"	13
	A403	2	7'-11"	107	2'-0"	1'-7"					2"	4½"	11
	A404	28	20'-3"	STR.									379
	A405	46	16'-6"	103	7'-11"	8"	7'-11"				2"		507
	A406	12	17'-0"	STR.									136
	A407	90	8'-8"	103	2'-9"	3'-2"	2'-9"				2"		521
	A408	49	9'-11"	103	2'-9"	4'-5"	2'-9"				2"		325
	A409	14	10'-0"	103	2'-9"	4'-6"	2'-9"				2"		94
												SUBTOTAL (1 ABUTMENT) (LB) =	12230
												TOTAL (2 ABUTMENT) (LB) =	24460

For pin diameters, hook lengths and bending diagrams, see Sheet 32.

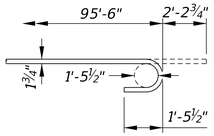

TIE ROD HOOK DETAIL
Not to Scale

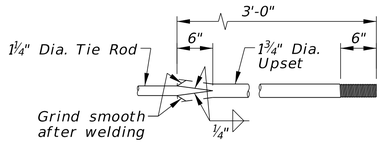

TIE ROD UPSET DETAIL
Not to Scale

NOTE

As an alternate, the entire tie rod may be of the size shown for the upset.

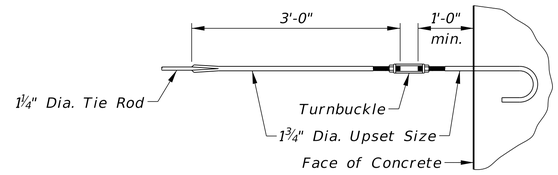

DETAIL FOR TURNBUCKLES
Not to Scale

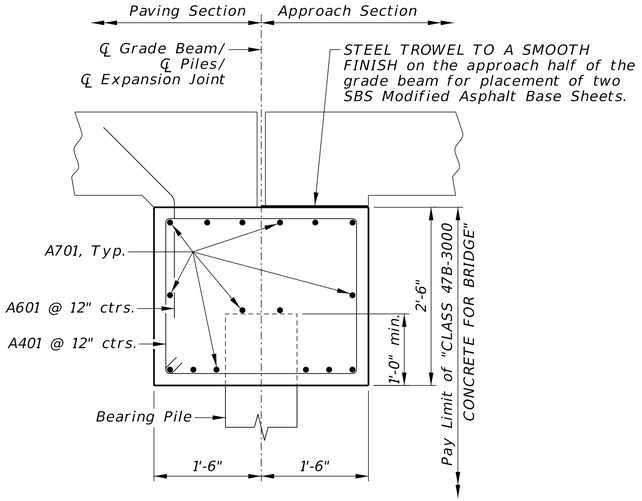

GRADE BEAM SECTION

Drainage Notes:

All miscellaneous drainage items at the abutments shall be considered subsidiary to the pay item "SUBSURFACE DRAINAGE MATTING".

Drainage Matting shall wrap around the sloping drain pipe and extend 3'-0" along the wings.

1. *Galvanized wire mesh screen*
2. *Remove the matting as required to fold filter fabric over top of matting.*
3. *Subsurface drainage matting. Place fabric side toward backfill.*
4. *Remove the matting as required to wrap filter fabric around drain pipe.*
5. *4" perforated plastic underdrain pipe shall conform to the requirements of Section 1038. The pipe must be continuous between abutment wings. Provide plugs at each end.*
6. *2" plastic pipe shall conform to the requirements of ASTM D 1785 schedule 40. Pipe shall be placed at 10'-0" intervals with a 4% slope.*

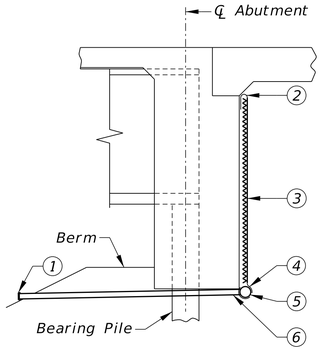

DRAINAGE DETAIL
Not to Scale

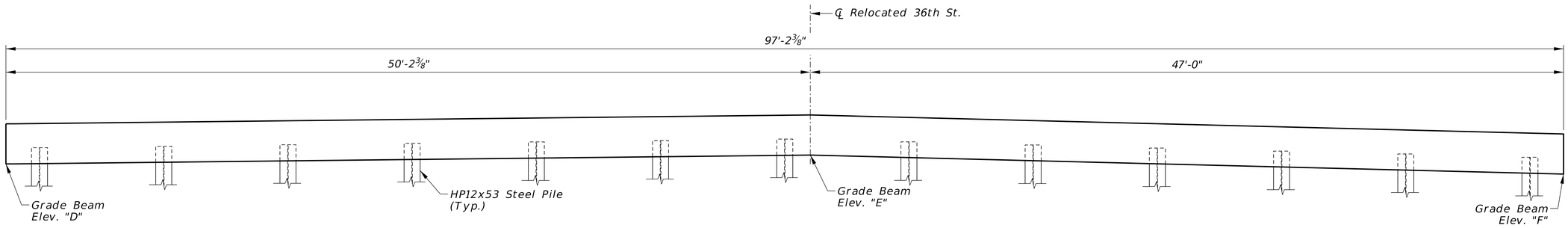

ELEVATION OF GRADE BEAM
(Looking Ahead Station)

GRADE BEAM ELEVATIONS (Bottom of Concrete)		
Location	*Abutment No. 1*	*Abutment No. 2*
Elev. "D"	*1162.85*	*1163.54*
Elev. "E"	*1163.49*	*1164.67*
Elev. "F"	*1162.30*	*1163.93*

PRELIMINARY PLAN
NOT FINAL - SUBJECT TO CHANGE

HDR Engineering Inc.
1917 South 67th Street
Omaha, NE 68106
Office: 402-399-1000
Nebraska C.O.A. CA-0443

S40

PROJECT NUMBER *C-77 (25-15)*

C.N.

LOCATION
SOUTH SARPY EXPRESSWAY

STRUCTURE NUMBER

238'-0" 2-SPAN PRESTRESSED CONCRETE GIRDER BRIDGE (NU1600)

ABUTMENT DETAILS & BILL OF BARS

DATE *MARCH 2026*

Q.C. ENGINEER: *R. Paradis*

DESIGNED BY: *M. Wagner-Loos* DETAILED BY: *T. Sas* CHECKED BY: *T. Sas*

SKEW *20° RHB* ROADWAY *Varies WB/Varies EB*

FHWA CONST. TYPE *X281* DESIGN LIVE LOAD *HL-93*

COUNTY *SARPY* HWY. NO. *---*

REF. POST. *---* STA. *112+46.01*

DESIGN CODE *LRFD 9th Edition*

SPECIAL PLAN NO. *2*

9 / *32*

Computer: 2MQ5130W92
Date: 13-FEB-2026 11:24
File: NDOT_2D_SP2.dgn

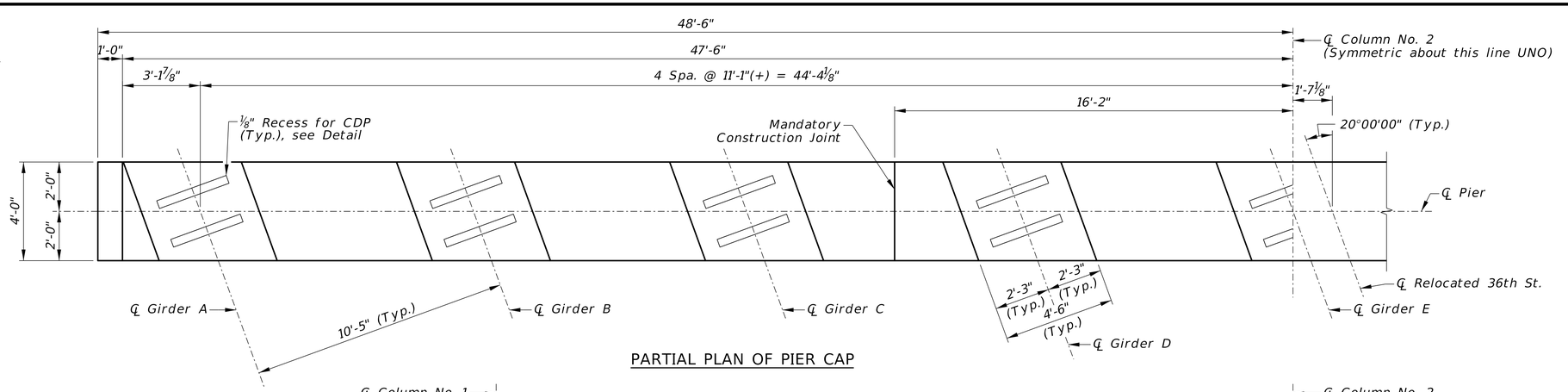

PARTIAL PLAN OF PIER CAP

GIRDER SEAT ELEVATIONS	
GIRDER	PIER NO. 1
A	1161.83
B	1162.03
C	1162.23
D	1162.42
E	1162.61
F	1162.45
G	1162.22
H	1162.00
I	1161.77

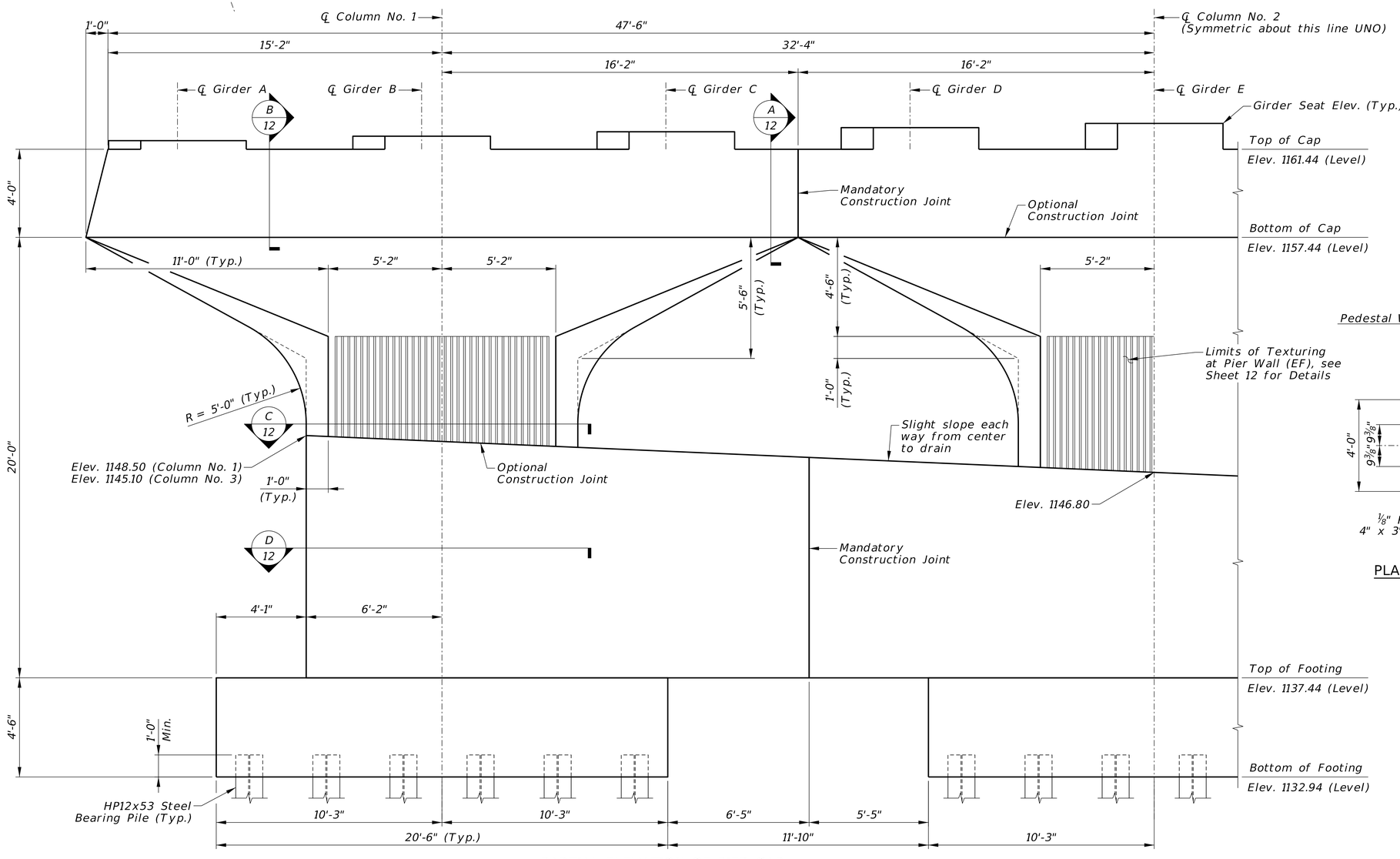

PARTIAL ELEVATION OF PIER CAP

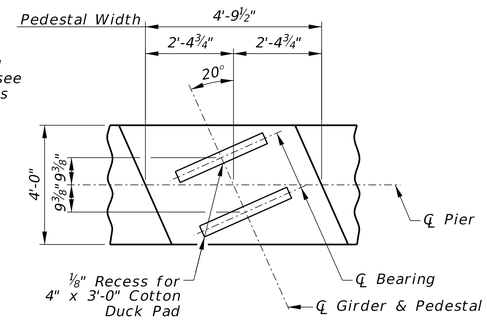

PLACEMENT OF RECESSES FOR CDP

AT PIER

Not to Scale

PRELIMINARY PLAN
NOT FINAL - SUBJECT TO CHANGE

HDR Engineering Inc.
1917 South 67th Street
Omaha, NE 68106
Office: 402-399-1000
Nebraska C.O.A. CA-0443

S41

PROJECT NUMBER
C-77 (25-15)

C.N.

LOCATION
SOUTH SARPY EXPRESSWAY

STRUCTURE NUMBER

PIER DETAILS (1 OF 4)

238'-0" 2-SPAN PRESTRESSED CONCRETE GIRDER BRIDGE (NU1600)

Q.C. ENGINEER: M. Wagner-Loos DATE MARCH 2026

DESIGNED BY: K. Devkota DETAILED BY: T. Sas

COUNTY SARPY
HWY. NO. ---
REF. POST. ---
STA. 112+46.01
DESIGN CODE LRFD 9th Edition

SKEW 20° RHB
ROADWAY Varies WB/Varies EB
FHWA CONST. TYPE X281
DESIGN LIVE LOAD HL-93

SPECIAL PLAN NO. 2

10/32

Computer: 2MQS130W92
Date: 13-FEB-2026 11:24
File: NDOT_2D_SP2.dgn

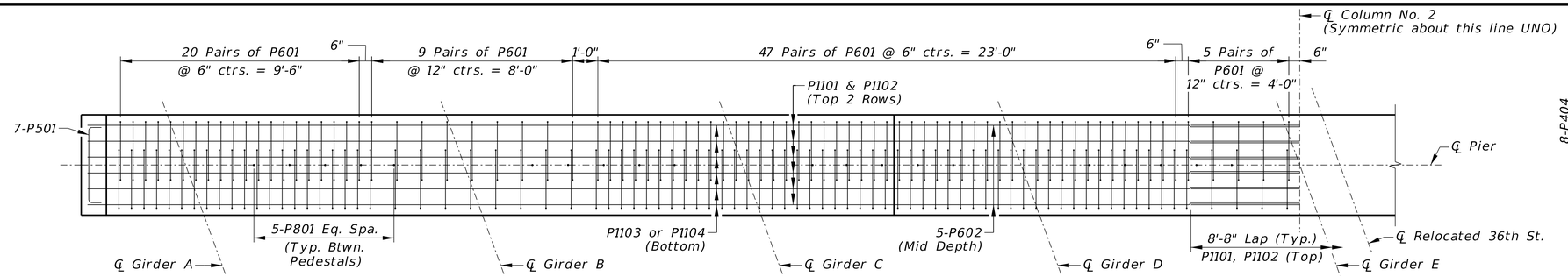

PARTIAL PLAN OF PIER CAP

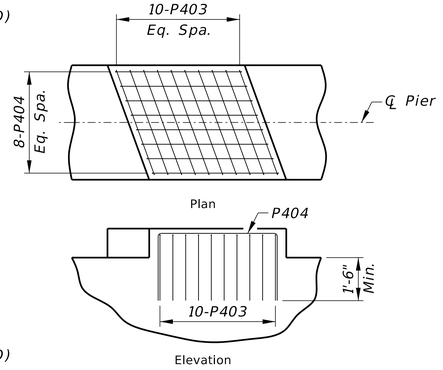

PEDESTAL REINFORCING

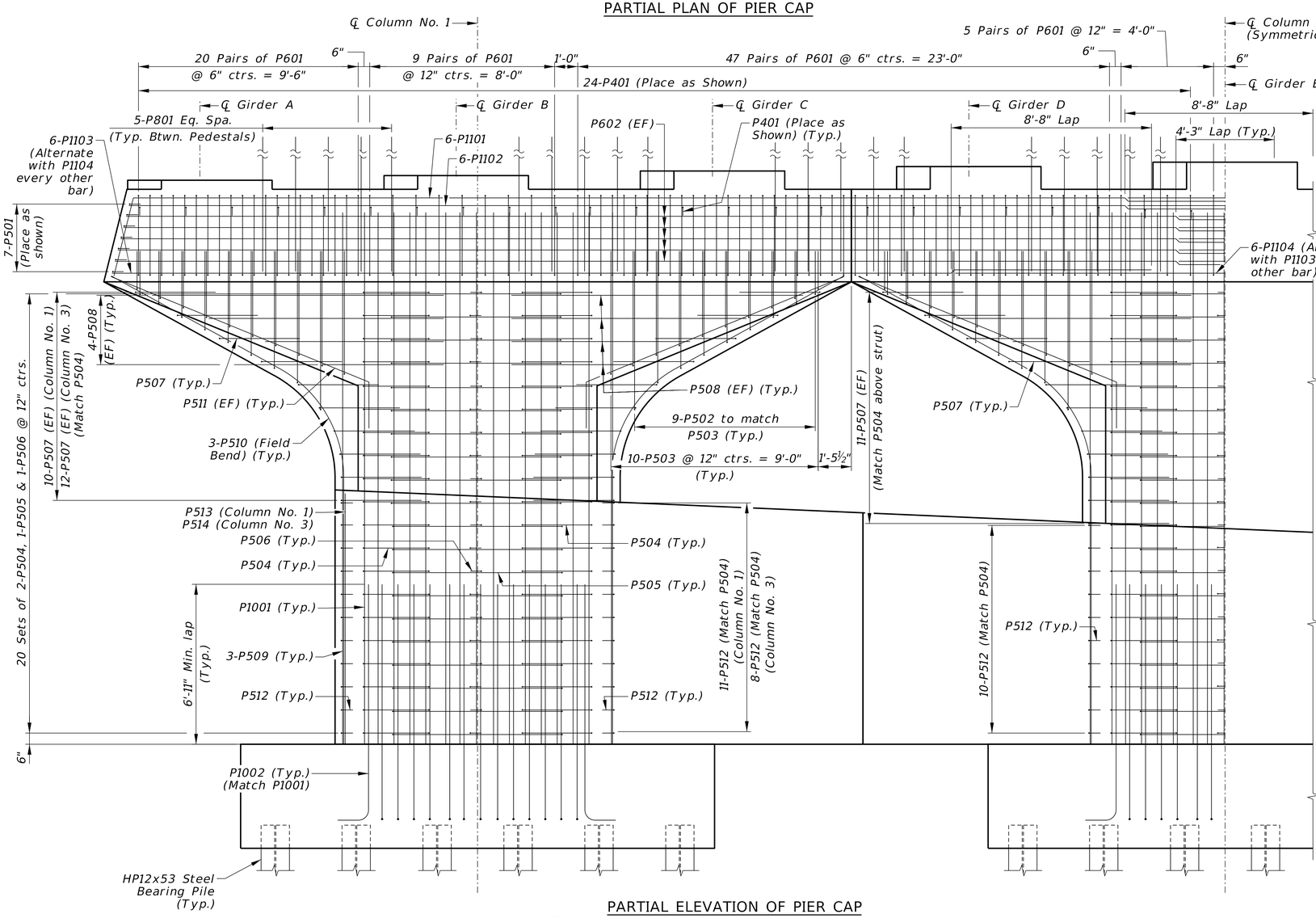

PARTIAL ELEVATION OF PIER CAP

(Typical Column Strut Reinforcing not shown for clarity)

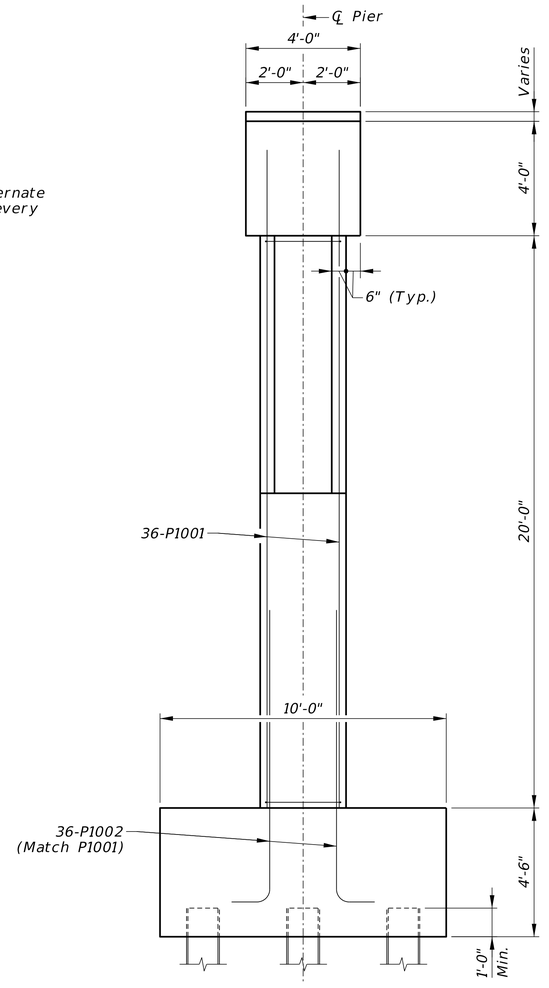

END VIEW

PRELIMINARY PLAN
NOT FINAL - SUBJECT TO CHANGE

NOTES:

For Column Strut Reinforcing Details, see Sheet 13.

Adjust P601 bars as necessary to provide 2" minimum clearance to construction joint in cap.

HDR Engineering Inc.
1917 South 67th Street
Omaha, NE 68106
Office: 402-399-1000
Nebraska C.O.A. CA-0443

S42

PROJECT NUMBER
C-77 (25-15)

C.N.

LOCATION
SOUTH SARPY EXPRESSWAY

STRUCTURE NUMBER

PIER DETAILS (2 OF 4)

238'-0" 2-SPAN PRESTRESSED CONCRETE GIRDER BRIDGE (NU1600)

Q.C. ENGINEER: M. Wagner-Loos DATE MARCH 2026

DETAILED BY: T. Sas

DESIGNED BY: K. Devkota

DESIGN CODE LRFD 9th Edition
DESIGN LIVE LOAD HL-93
FHWA CONST. TYPE X281
ROADWAY Varies WB/Varies EB
SKEW 20° RHB
REF. POST. ---
STA. 112+46.01
HWY. NO. ---
COUNTY SARPY

SPECIAL PLAN NO. 2

11 / 32

Computer: 2NQ5130W92
Date: 13-FEB-2026 14:46
File: NDOT_2D_SP2.dgn

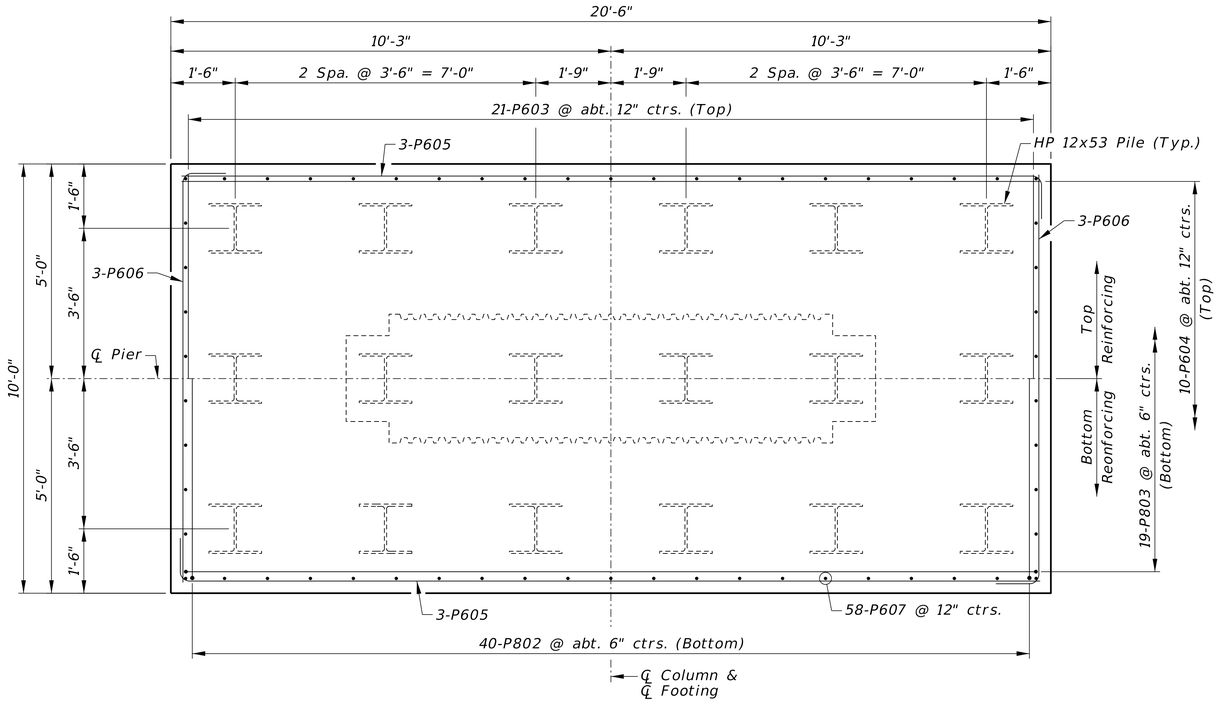

PLAN OF FOOTING

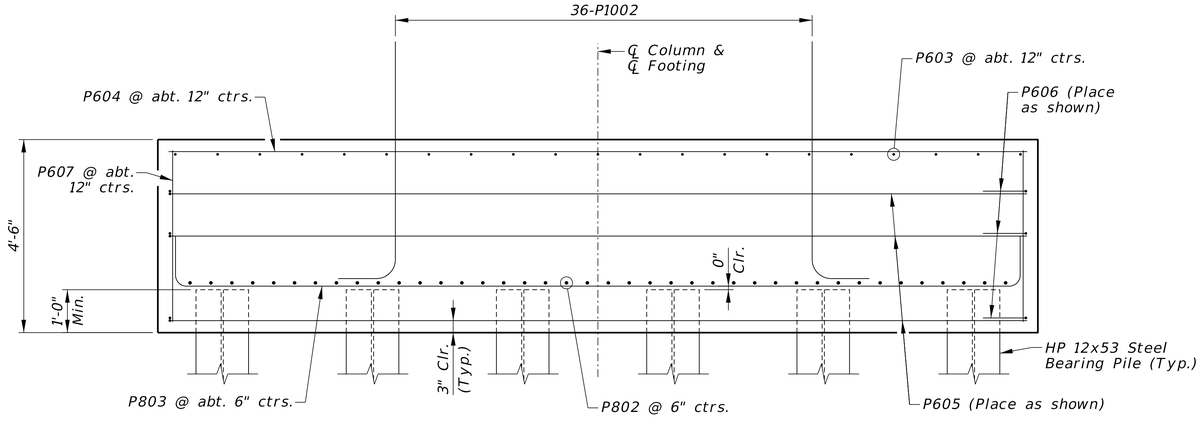

ELEVATION OF FOOTING

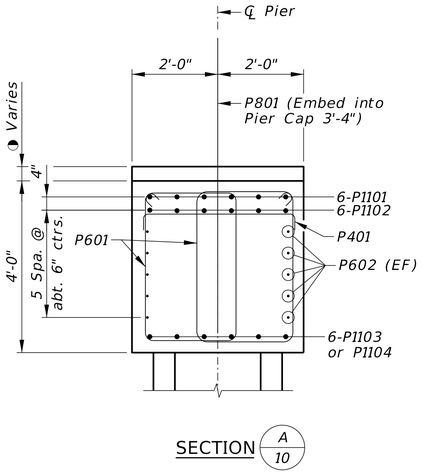

SECTION A/10

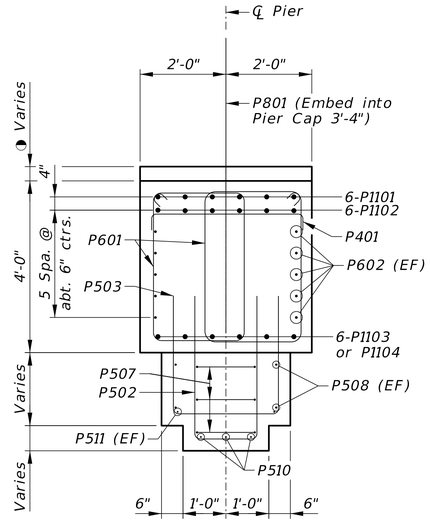

SECTION B/10

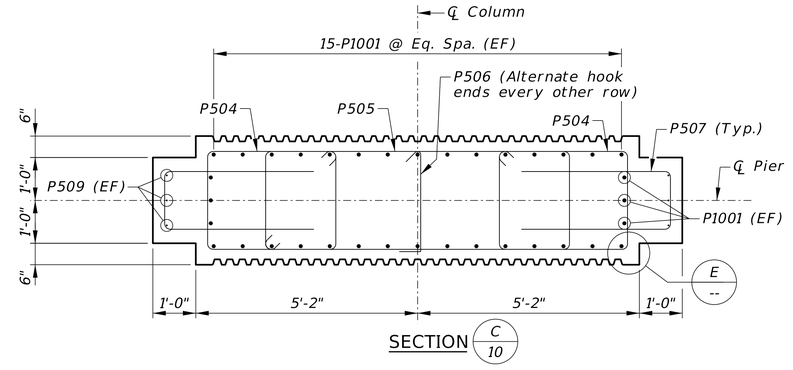

SECTION C/10

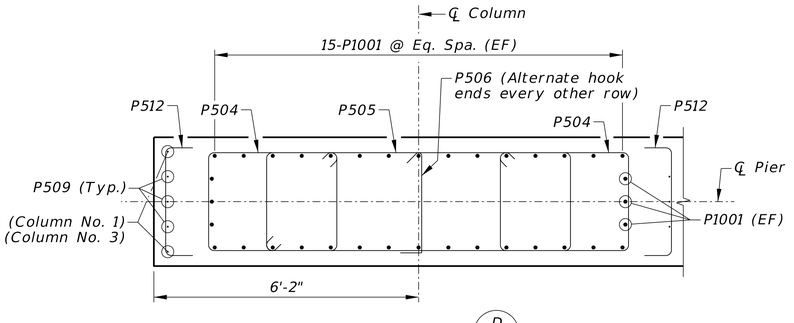

SECTION D/10

(Typical column strut reinforcing not shown for clarity)

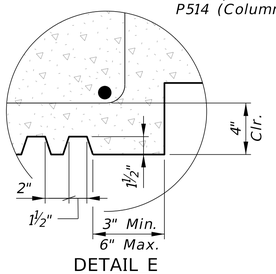

DETAIL E

NOTE:

◑ Pedestal reinforcing not shown for clarity.

PRELIMINARY PLAN
NOT FINAL - SUBJECT TO CHANGE

HDR Engineering Inc.
1917 South 67th Street
Omaha, NE 68106
Office: 402-399-1000
Nebraska C.O.A. CA-0443

S43

PROJECT NUMBER
C-77 (25-15)

C.N.

LOCATION
SOUTH SARPY EXPRESSWAY

STRUCTURE NUMBER

238'-0" 2-SPAN PRESTRESSED CONCRETE GIRDER BRIDGE (NU1600)

PIER DETAILS (3 OF 4)

Q.C. ENGINEER: M. Wagner-Loos DATE MARCH 2026

DESIGNED BY: K. Devkota DETAILED BY: T. Sas

COUNTY SARPY
HWY. NO. ---
REF. POST. ---
STA. 112+46.01
DESIGN CODE LRFD 9th Edition

SKEW 20° RHB
ROADWAY Varies WB/Varies EB
FHWA CONST. TYPE X281
DESIGN LIVE LOAD HL-93

SPECIAL PLAN NO. 2

12/32

Computer: 2MQ5130W92
Date: 13-FEB-2026 14:53
File: NDOT_2D_SP2.dgn

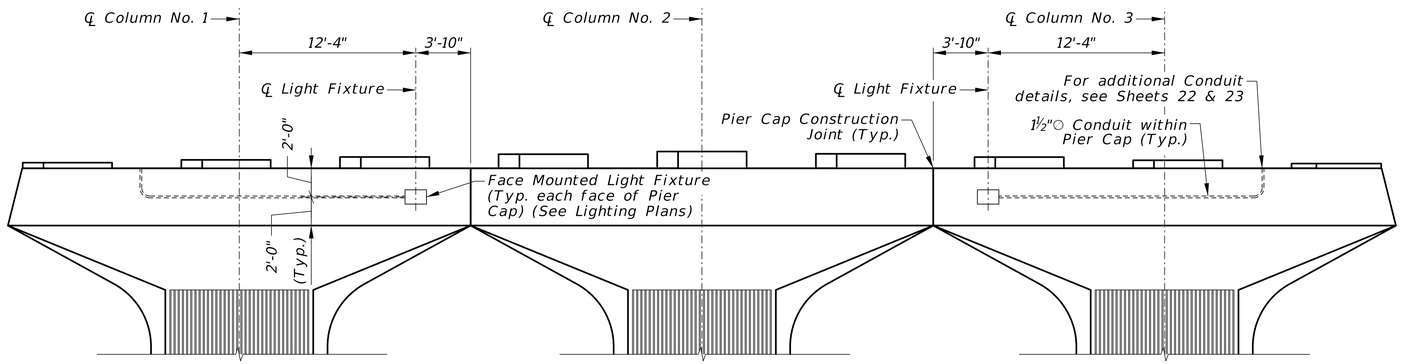

LIGHTING LAYOUT

Not to Scale

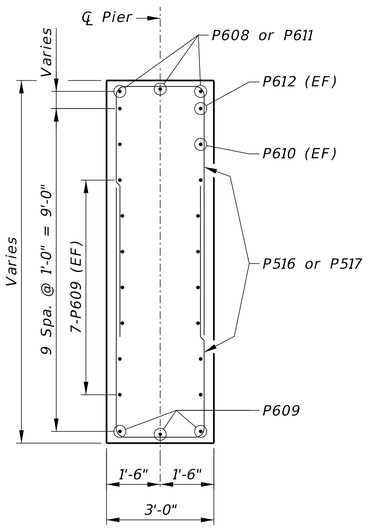

SECTION F

BAR SETS				
MARK	MAX. LENGTH	MIN. LENGTH	NO. OF SETS	BARS PER SET
P502	16'-10"	6'-8"	6	9
P503	14'-8"	7'-4"	6	10
P508	12'-9"	5'-5"	6	4

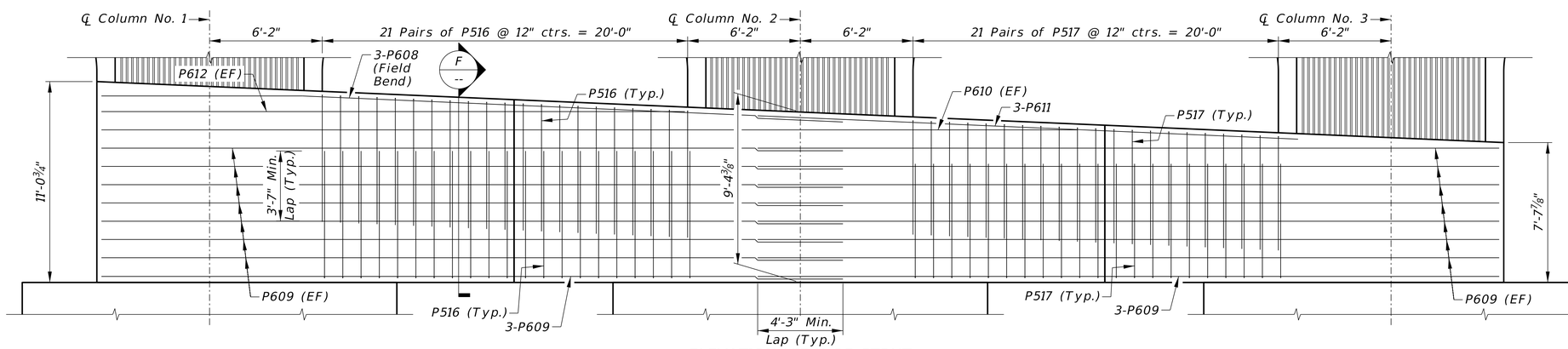

ELEVATION VIEW OF STRUT

(Typical column reinforcing not shown for clarity)

BILL OF BARS

MARK	NUMBER OF BARS	LENGTH	TYPE	A	B	C	D	E	F	PIN Ø	HOOK	WEIGHT (LB)
P1101	12	55'-2"	105	51'-7½"	3'-6½"	10¼"				1'-0"		3517
P1102	12	51'-9"	STR.									3299
P1103	6	45'-0"	STR.									1435
P1104	6	60'-0"	STR.									1913
P1001	108	23'-0"	STR.									10689
P1002	108	12'-1"	129	10'-3"						10¾"	1'-10"	5615
P801	40	6'-8"	STR.									712
P802	120	12'-0"	128	9'-4"						6"	1'-4"	3845
P803	57	22'-6"	128	19'-10"						6"	1'-4"	3424
P601	324	13'-0"	107	3'-6"	2'-4"					4½"	8"	6326
P602	10	100'-5"	STR.	Includes 1 - 4'-3" Lap								1508
P603	63	9'-6"	STR.									899
P604	30	20'-0"	STR.									901
P605	18	21'-0"	129	20'-0"						4½"	1'-0"	568
P606	18	10'-6"	129	9'-6"						4½"	1'-0"	284
P607	174	4'-0"	STR.									1045
P608	3	40'-8"	STR.									183
P609	17	80'-9"	STR.	Includes 1 - 4'-3" Lap								2062
P610	2	53'-5"	STR.									160
P611	3	29'-4"	STR.									132
P612	2	31'-11"	STR.									96
P501	14	4'-4"	128	3'-4"						2½"	6"	63
P502	54	11'-9" Avg.	103	2'-7" Min.	1'-6"	2'-7" Min.				2½"		662
				7'-8" Max.		7'-8" Max.						
P503	60	11'-0" Avg.	103	2'-5" Min.	2'-6"	2'-5" Min.				2½"		688
				6'-1" Max.		6'-1" Max.						
P504	120	11'-7"	107	2'-4"	3'-0"					2½"	5½"	1450
P505	60	20'-0"	107	2'-4"	7'-2½"					2½"	5½"	1252
P506	60	3'-4"	113	2'-4"						2½"	6"	209
P507	66	9'-4"	103	4'-0"	1'-4"	4'-0"				2½"		642
P508	24	9'-1" Avg.	STR.									227
P509	18	22'-1"	STR.									415
P510	18	25'-6"	STR.									479
P511	12	14'-9"	105	12'-0"	2'-9"	1'-0"				2½"		185
P512	58	3'-6"	128	2'-6"						2½"	6"	212
P513	2	10'-9"	STR.									22
P514	2	7'-4"	STR.									15
P516	42	16'-2"	103	6'-10"	2'-6"	6'-10"				2½"		708
P517	42	14'-8"	103	6'-1"	2'-6"	6'-1"				2½"		642
P401	48	4'-3"	128	3'-6"						2"	4½"	136
P403	90	8'-9"	103	2'-6"	3'-9"	2'-6"				2"		526
P404	72	9'-3"	103	2'-6"	4'-3"	2'-6"				2"		445
											TOTAL (LBS.) =	57591

NOTE:

For pin dimensions, hook lengths and bending diagrams, see Sheet 32.

PRELIMINARY PLAN
NOT FINAL - SUBJECT TO CHANGE

HDR Engineering Inc.
1917 South 67th Street
Omaha, NE 68106
Office: 402-399-1000
Nebraska C.O.A. CA-0443

S44

PROJECT NUMBER
C-77 (25-15)

C.N.

LOCATION
SOUTH SARPY EXPRESSWAY

STRUCTURE NUMBER

PIER DETAILS (4 OF 4)
238'-0" 2-SPAN PRESTRESSED CONCRETE GIRDER BRIDGE (NU1600)
Varies EB

Q.C. ENGINEER: *M. Wagner-Loos* DATE *MARCH 2026*
DETAILED BY: *E. Sorens*
DESIGNED BY: *K. Devkota*

SKEW *20°* *RHB*
ROADWAY *Varies WB/Varies EB*
FHWA CONST. TYPE *X281*
DESIGN LIVE LOAD *HL-93*
DESIGN CODE *LRFD 9th Edition*
STA. *112+46.01*
REF. POST. *---*
HWY. NO. *---*
COUNTY *SARPY*

SPECIAL PLAN NO. *2*

13 / *32*

Computer: 2MQS130W92
Date: 13-FEB-2026 15:05
File: NDOT_2D_SP2.dgn

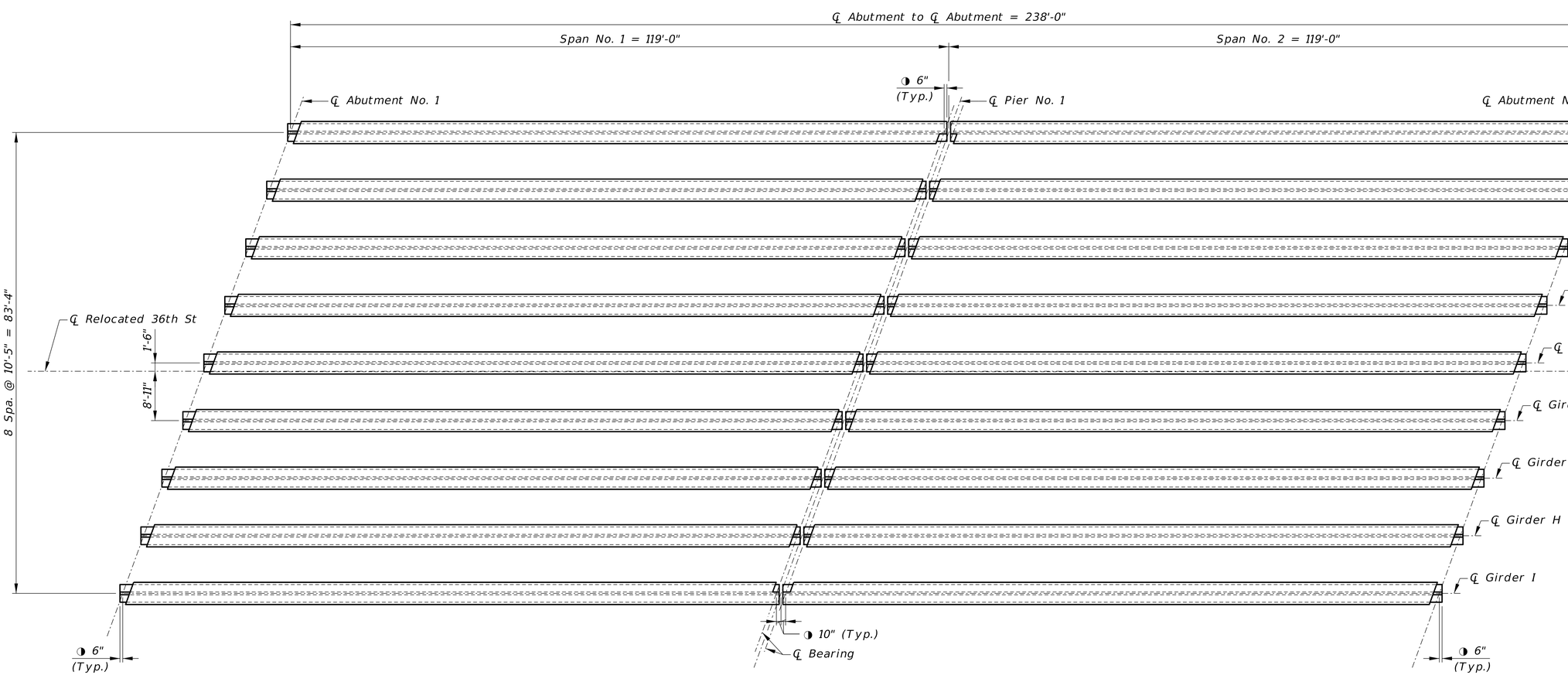

GIRDER LAYOUT

NOTE:

◑ Measured along ℄ Girder

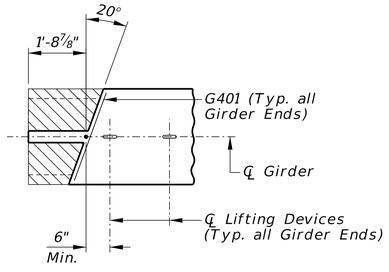

TOP FLANGE BLOCKOUT DETAIL - ABUTMENTS

Not to Scale

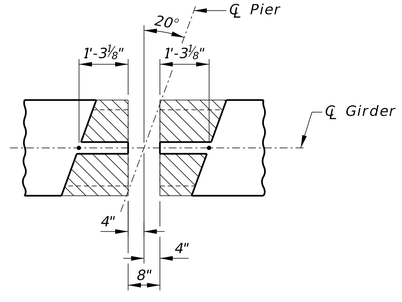

TOP FLANGE BLOCKOUT DETAIL - PIER INTERIOR GIRDER

Not to Scale

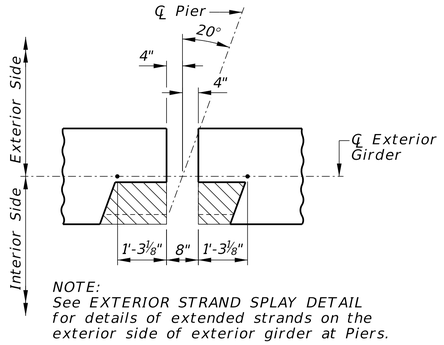

NOTE:
See EXTERIOR STRAND SPLAY DETAIL for details of extended strands on the exterior side of exterior girder at Piers.

TOP FLANGE BLOCKOUT DETAILS - PIER EXTERIOR GIRDER

Not to Scale

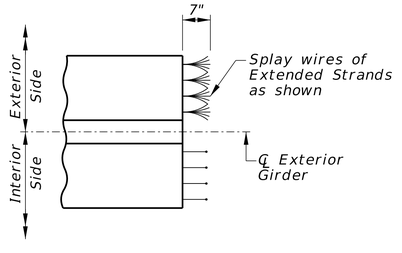

EXTERIOR STRAND SPLAY DETAIL

Showing Bottom Flange in Plan View

PRELIMINARY PLAN
NOT FINAL - SUBJECT TO CHANGE

HDR Engineering Inc.
1917 South 67th Street
Omaha, NE 68106
Office: 402-399-1000
Nebraska C.O.A. CA-0443

S45

PROJECT NUMBER
C-77 (25-15)

C.N.

LOCATION
SOUTH SARPY EXPRESSWAY

STRUCTURE NUMBER

238'-0" 2-SPAN PRESTRESSED CONCRETE GIRDER BRIDGE (NU1600)

GIRDER LAYOUT

COUNTY SARPY
HWY. NO. ---
REF. POST. ---
STA. 112+46.01
DESIGN CODE LRFD 9th Edition

SKEW 20° RHB
ROADWAY Varies WB/Varies EB
FHWA CONST. TYPE X281
DESIGN LIVE LOAD HL-93

DESIGNED BY: M. Wagner-Loos DETAILED BY: T. Sas
Q.C. ENGINEER: K. Devkota DATE MARCH 2026

SPECIAL PLAN NO. 2

14/32

Computer: 2MQS130W92
Date: 13-FEB-2026 11:24
File: NDOT_2D_SP2.dgn

NU 1600 GIRDER DESIGN

SPAN NO.	GIRDER CASTING LENGTH (FT.)	CONCRETE STRENGTH (KSI) AT RELEASE	CONCRETE STRENGTH (KSI) AT 28 DAYS	NO. OF STRANDS PER GIRDER	STRANDS PER ROW AT MIDSPAN R1	R2	R3	R4	R5	R6	NUMBER OF DEFLECTED STRANDS	STRAND CENTROID ENDS YE (IN.)	STRAND CENTROID MIDSPAN YM (IN.)	STRAND DEFLECTION AT ENDS YD (IN.)	DISTANCE BETWEEN HOLDDOWN POINTS X (FT.)
1 & 2	*119'-2"*	*6.0*	*8.5*	*40*	*14*	*12*	*8*	*6*			*8*	*13.73*	*4.30*	*47.21*	*23'-10"*

NON-COMPOSITE PROPERTIES / COMPOSITE PROPERTIES

GIRDER WEIGHT (LB/FT)	GIRDER AREA (IN²)	GIRDER CENTROID YNC (IN.)	MOMENT OF INERTIA (IN⁴)	MIDSPAN CAMBER (IN.) AT RELEASE	MIDSPAN CAMBER (IN.) AT 30 DAYS	DEFLECTION FOR SHIMS (IN.) (DUE TO SLAB AND RAIL) SPAN TENTH POINTS (SYM.) .1	.2	.3	.4	.5	SLAB 28 DAY STRENGTH (PSI)	SLAB DESIGN DEPTH (IN.)	MIDSPAN TRANSFORMED CONCRETE SECTION SLAB EFFECTIVE WIDTH (IN.) (n x be)	SECTION AREA (IN²)	SECTION CENTROID YC (IN.)	MOMENT OF INERTIA (IN⁴)
845.8	*811.9*	*28.44*	*459,283*	*2.32*	*4.10*	*0.79*	*1.40*	*1.84*	*2.11*	*2.19*	*4,000*	*7.50*	*97.5*	*1,543*	*46.59*	*1,027,282*

NOTE:
◩ *See Girder Layout Sheet for Blockout Details.*

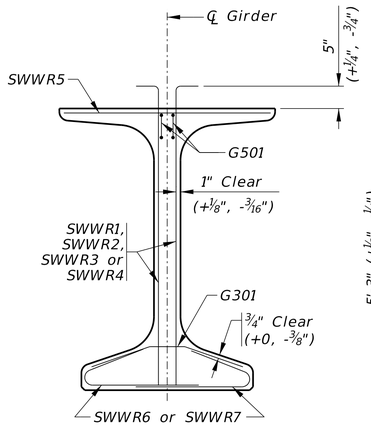

REINFORCING

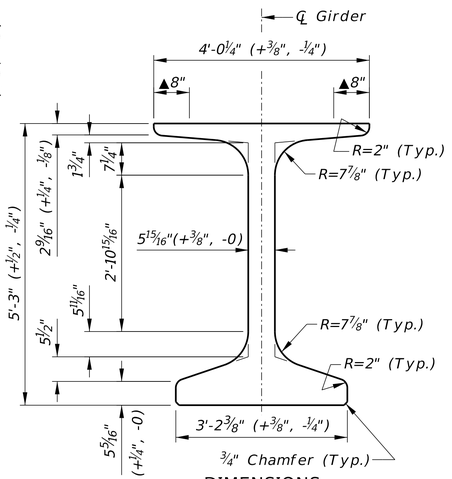

DIMENSIONS

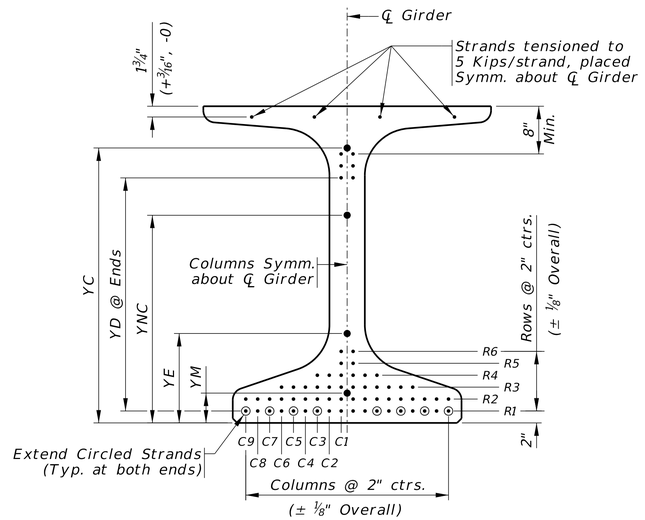

STRAND SPACINGS AND TOLERANCES
Not to Scale

◓ d=2" for D19 and smaller.
d=2½" for D20 and larger.

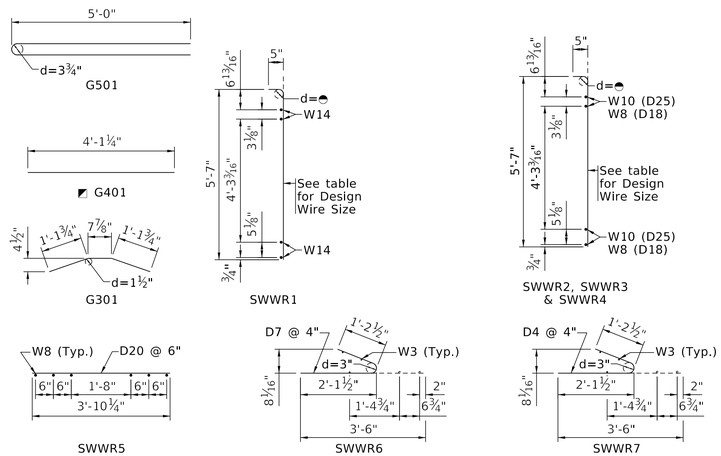

BENDING DIAGRAMS
Not to Scale

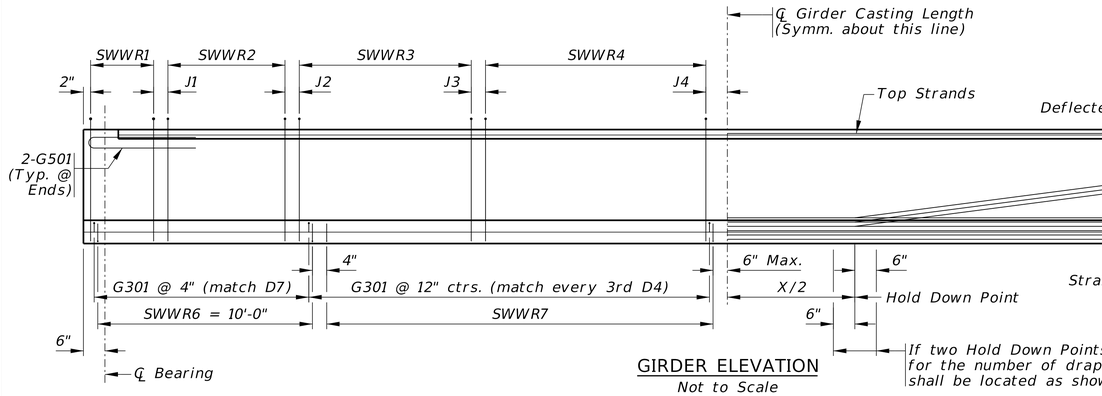

GIRDER ELEVATION
Not to Scale

PRESTRESSED GIRDER NOTES:

FABRICATOR shall be responsible for exercising extreme care in lifting, handling, storing and transporting of the prestressed girders to prevent cracking or damage. Girders shall be maintained in an upright position and supported near the ends at all times. Proper support bearings shall be used to avoid twisting of the girders. Lifting devices and any other details designed by the Fabricator shall be shown on the shop plans.

PRESTRESSING STRAND shall be uncoated, seven-wire, low-relaxation steel strand of 0.6" nominal diameter. and shall conform to the requirements of ASTM A416, Grade 270. Strands shall be tensioned to 43.94 kips before release, unless specified otherwise. All methods and procedures employed in tensioning the strands shall be subject to the Engineer's approval. The method chosen shall be executed in a manner to ensure that both ends of all strands in the girder are uniformly tensioned. The prestressed strand shall be released in a manner that will minimize eccenctricity.

CONCRETE for the girders shall have the strength at release and at 28 days (design strength) as shown in the data table. No bond stress shall be transferred to the concrete nor the end anchorage released until the concrete has attained the specified strength. All exposed edges of girders, except at top and ends, shall be chamfered ¾".

▲ GIRDER TOP FLANGE shall be steel troweled to a smooth finish for 8" at the edges, as shown. Bond breaker shall be applied to this region only. The center portion shall be rough finished by scarifying the surface transversely with a wire brush. No laitance shall remain on the surface. Bond breaker shall be Silicoseal, manufactured by Nox-Crete, Clean Lift 20/20 manufactured by SpecChem, or an approved equal.

REINFORCING STEEL shall conform to the requirements of ASTM designation A615, Grade 60. Steel Welded Wire Reinforcement, deformed, for concrete shall conform to ASTM A1064 or AASHTO M336 with a minimum yield strength of 70 ksi.

BEARING PLATES shall conform to the requirements of ASTM A709, Grade 36 or Grade 50W weathering steel. The Grade 36 steel shall be galvanized according to the requirements of ASTM A123.

DIMENSIONAL TOLERANCES shall be in accordance with the Prestressed Concrete Institute Manual for Quality Control, MNL-116-99, 4th Edition.

STEEL WELDED WIRE REINFORCEMENT

SPAN NO.	SWWR1 WIRE SIZE	S1	L1	J1	SWWR2 WIRE SIZE	S2	L2	J2	SWWR3 WIRE SIZE	S2	L3	J3	SWWR4 WIRE SIZE	S4	L4	J4
1 & 2	*D31*	*2"*	*3'-0"*	*3"*	*D25*	*3"*	*17'-9"*	*6"*	*D18*	*6"*	*8'-6"*	*1'-0"*	*D18*	*1'-0"*	*28'-0"*	*5"*

NOTE:
SWWR5, SWWR6, & SWWR7 as shown in Bending Diagrams.

S = Vertical wire spacing
L = Length of SWWR mats
J = Distance between SWWR mats

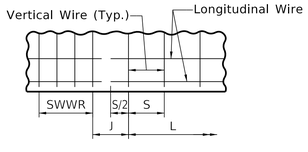

FABRIC PLACEMENT DETAIL
Not to Scale

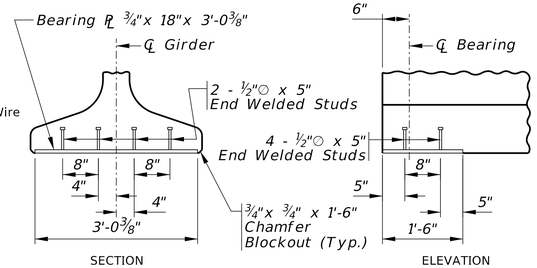

BEARING PLATE DETAILS

PRELIMINARY PLAN
NOT FINAL - SUBJECT TO CHANGE

HDR Engineering Inc.
1917 South 67th Street
Omaha, NE 68106
Office: 402-399-1000
Nebraska C.O.A. CA-0443

S46

PROJECT NUMBER
C-77 (25-15)

C.N.

LOCATION
SOUTH SARPY EXPRESSWAY

STRUCTURE NUMBER

NU 1600 GIRDER DETAILS
238'-0" 2-SPAN PRESTRESSED CONCRETE GIRDER BRIDGE (NU1600)

Q.C. ENGINEER: K. Devkota DATE MARCH 2026
DESIGNED BY: M. Wagner-Loos DETAILED BY: T. Sas

SKEW 20° RHB
ROADWAY Varies WB/Varies EB
FHWA CONST. TYPE X281
DESIGN LIVE LOAD HL-93
DESIGN CODE LRFD 9th Edition
COUNTY SARPY
HWY. NO. ---
REF. POST. ---
STA. 112+46.01

SPECIAL PLAN NO. 2

15/32

Computer: 2NQ5130W92
Date: 13-FEB-2026 11:24
File: NDOT_2D_SP2.dgn

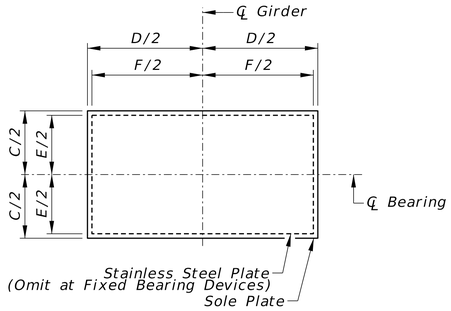

SOLE PLATE
Not to Scale

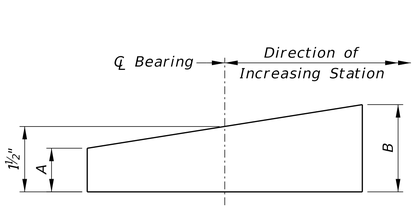

SECTION OF BEVELED SOLE PLATE
Not to Scale

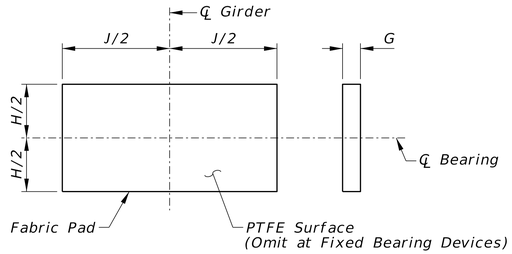

FABRIC PAD
Not to Scale

DIMENSIONS FOR BEARING DEVICES									
LOCATION	SOLE PLATE				STAINLESS STEEL		FABRIC PAD		
	A	B	C	D	E	F	G	H	J
Abutment No. 1	1 7/16"	1 9/16"	1'-0"	3'-4"	11"	3'-0 3/4"	1"	4"	3'-0"
Pier No. 1	1 1/2"	1 1/2"	1'-0"	3'-4"	--	--	1"	4"	3'-0"
Abutment No. 2	1 9/16"	1 7/16"	1'-0"	3'-4"	11"	3'-0 3/4"	1"	4"	3'-0"

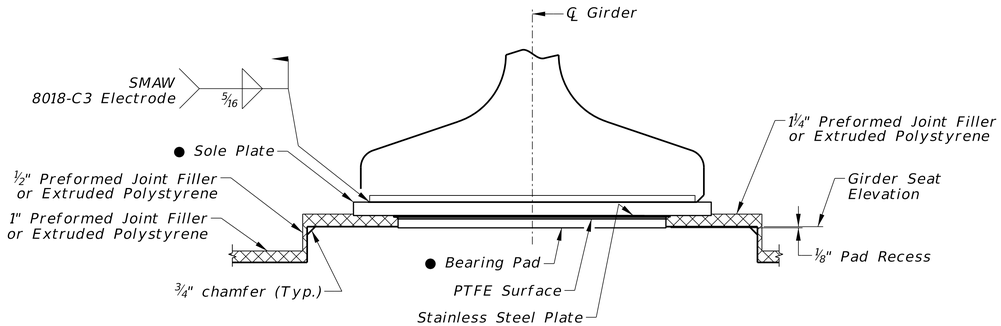

SECTION AT EXPANSION BEARING (PTFE TYPE)
AT ABUTMENTS
Not to Scale

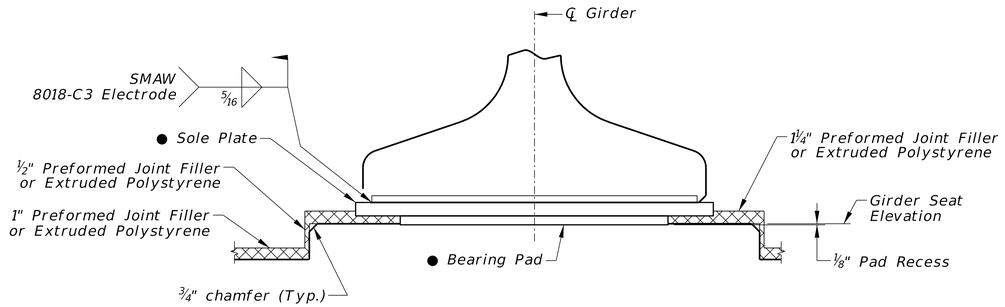

SECTION AT FIXED BEARING
AT PIER
Not to Scale

● *Sole Plates and Fabric Pads need to be inspected prior to installation. Please notify the Engineer a minimum of three weeks before contractor's scheduled installation for inspection.*

PRELIMINARY PLAN
NOT FINAL - SUBJECT TO CHANGE

HDR Engineering Inc.
1917 South 67th Street
Omaha, NE 68106
Office: 402-399-1000
Nebraska C.O.A. CA-0443

S47

PROJECT NUMBER
C-77 (25-15)

C.N.

LOCATION
SOUTH SARPY EXPRESSWAY

STRUCTURE NUMBER

238'-0" 2-SPAN PRESTRESSED CONCRETE GIRDER BRIDGE (NU1600)

BEARING DETAILS

COUNTY SARPY
HWY. NO. ---
REF. POST. ---
STA. 112+46.01
DESIGN CODE LRFD 9th Edition
SKEW 20° RHB
ROADWAY Varies WB/Varies EB
FHWA CONST. TYPE X281
DESIGN LIVE LOAD HL-93
Q.C. ENGINEER: K. Devkota
DATE MARCH 2026
DESIGNED BY: M. Wagner-Loos
DETAILED BY: T. Sas
CHECKED BY: J. Hoffman

SPECIAL PLAN NO. 2

16/32

Computer: 2MQ5130W92
Date: 13-FEB-2026 11:24
File: NDOT_2D_SP2.dgn

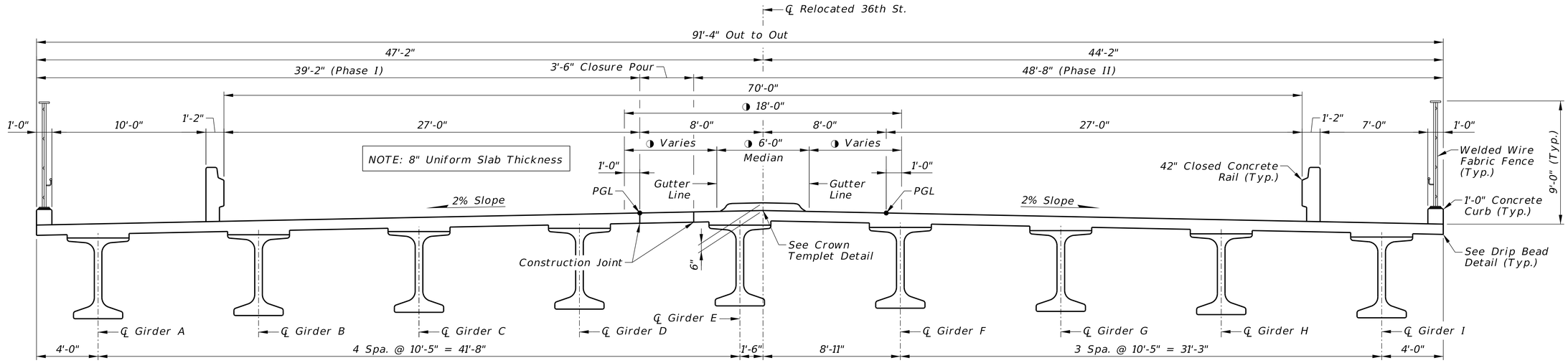

TYPICAL SECTION

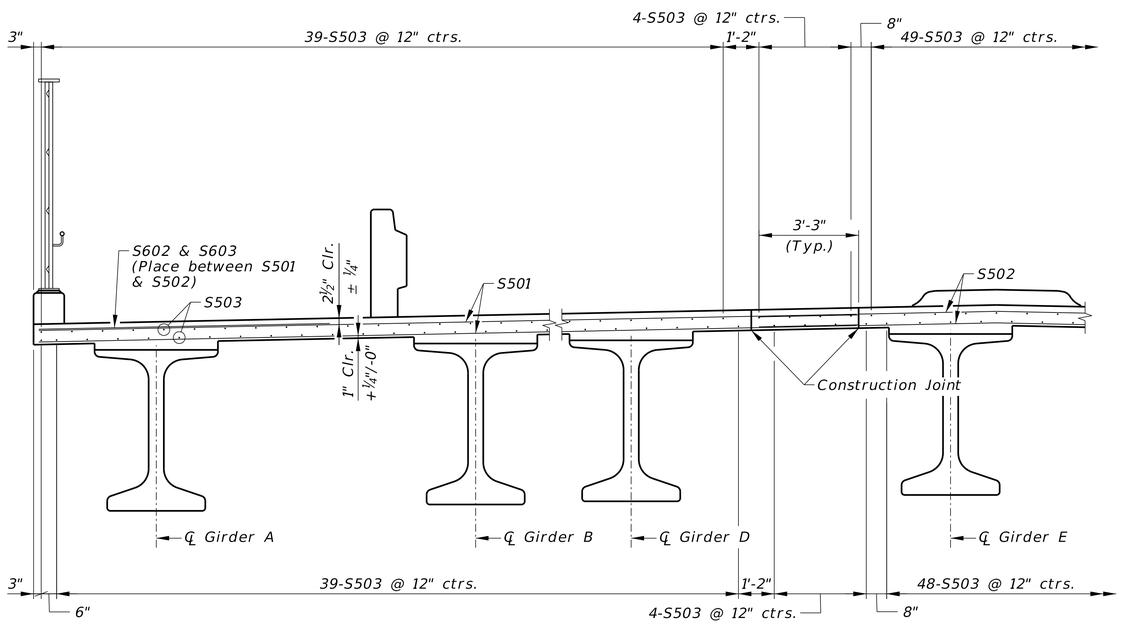

PART SECTION NEAR MIDSPAN

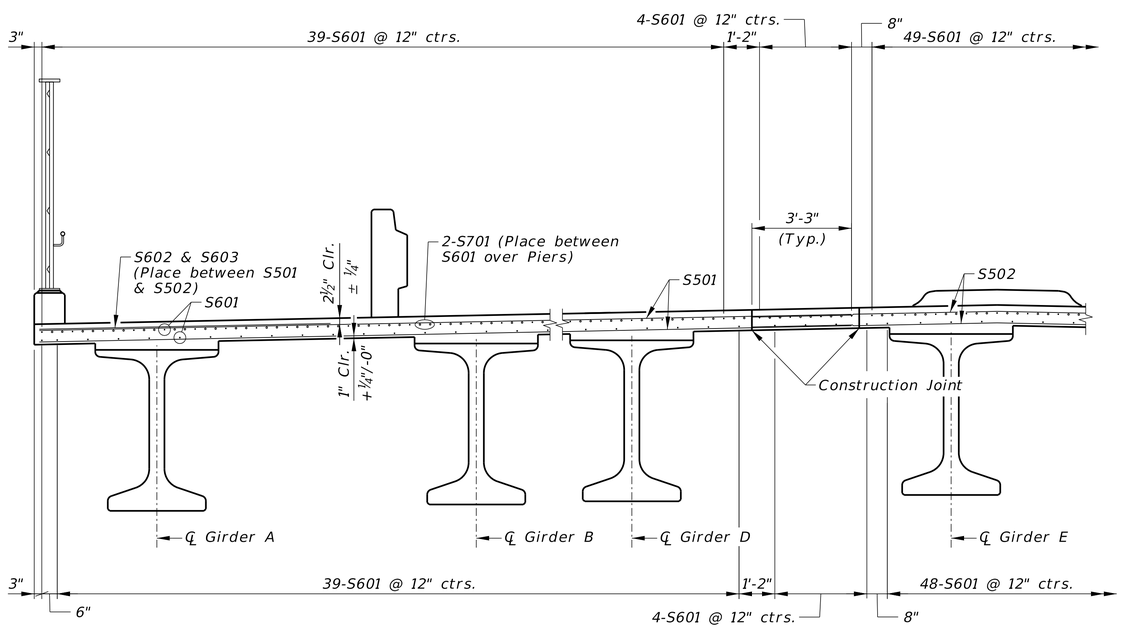

PART SECTION NEAR PIER

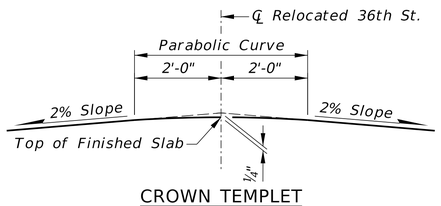

CROWN TEMPLET
Not to Scale

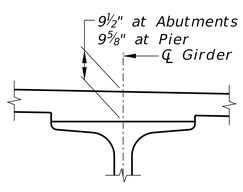

SHIM DETAIL
Not to Scale

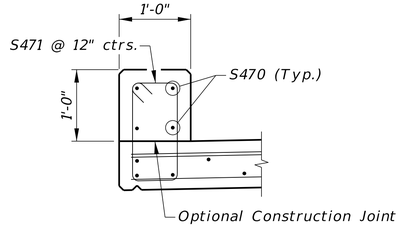

CURB DETAIL

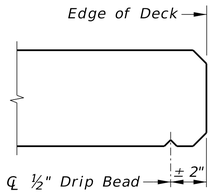

DRIP BEAD DETAIL
Not to Scale

NOTES:

◑ *Limits of Median and Gutter Lines, see Sheet 21 for Median Details.*

See Sheet 28 for Concrete Rail Details.

See Sheet 29 & 30 for Fence Details.

PRELIMINARY PLAN
NOT FINAL - SUBJECT TO CHANGE

HDR Engineering Inc.
1917 South 67th Street
Omaha, NE 68106
Office: 402-399-1000
Nebraska C.O.A. CA-0443

S48

PROJECT NUMBER
C-77 (25-15)

C.N.

LOCATION
SOUTH SARPY EXPRESSWAY

STRUCTURE NUMBER

TYPICAL SECTION
238'-0" 2-SPAN PRESTRESSED CONCRETE GIRDER BRIDGE (NU1600)

COUNTY SARPY
HWY. NO. ---
REF. POST. ---
STA. 112+46.01
DESIGN CODE LRFD 9th Edition
SKEW 20° RHB
ROADWAY Varies WB/Varies EB
FHWA CONST. TYPE X281
DESIGN LIVE LOAD HL-93

DESIGNED BY: M. Wagner-Loos DETAILED BY: T. Sas
Q.C. ENGINEER: K. Devkota DATE MARCH 2026

SPECIAL PLAN NO. 2

17/32

Computer: 2MQ5130W92
Date: 13-FEB-2026 11:24
File: NDOT_2D_SP2.dgn

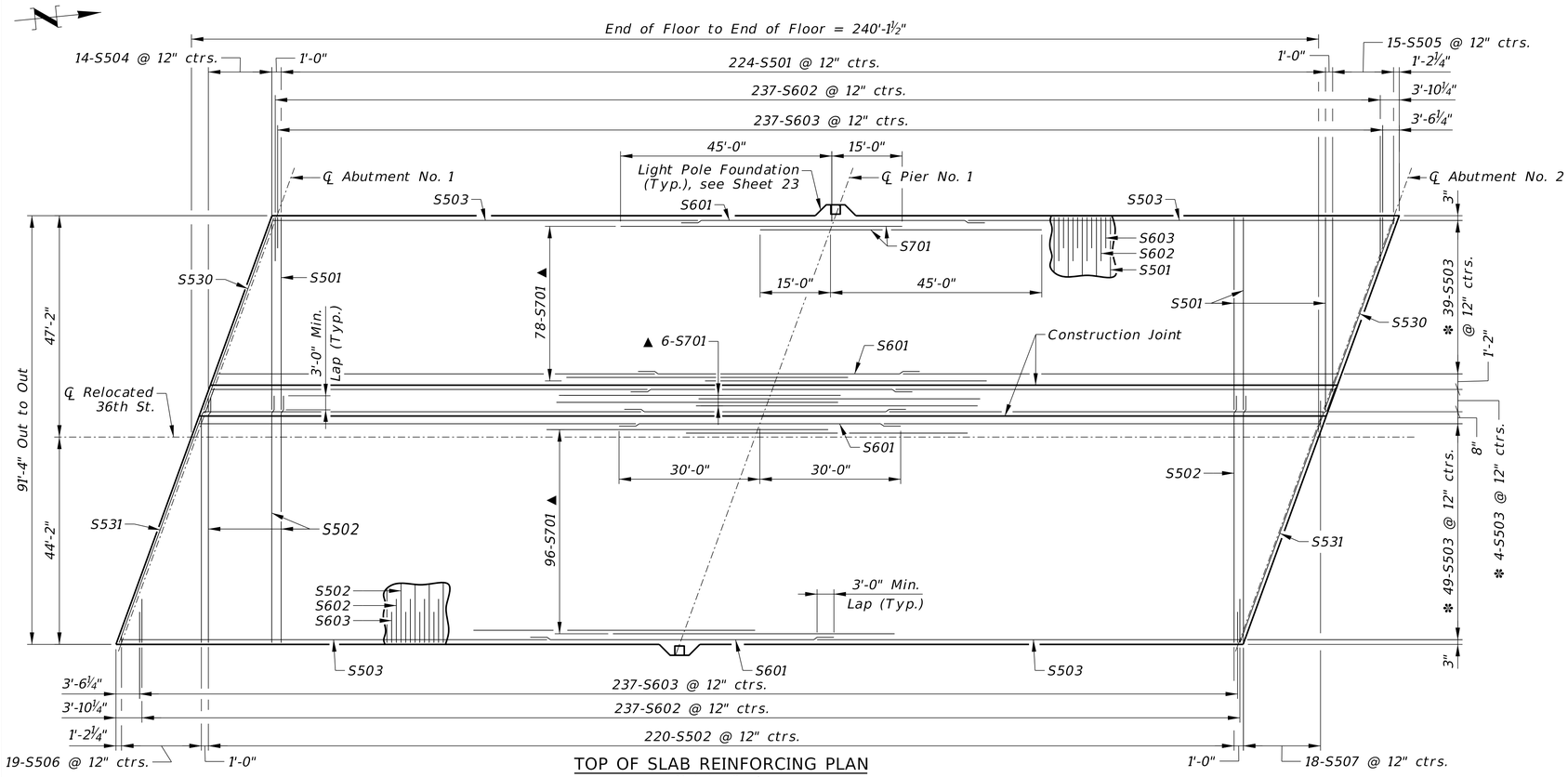

TOP OF SLAB REINFORCING PLAN

Not to Scale

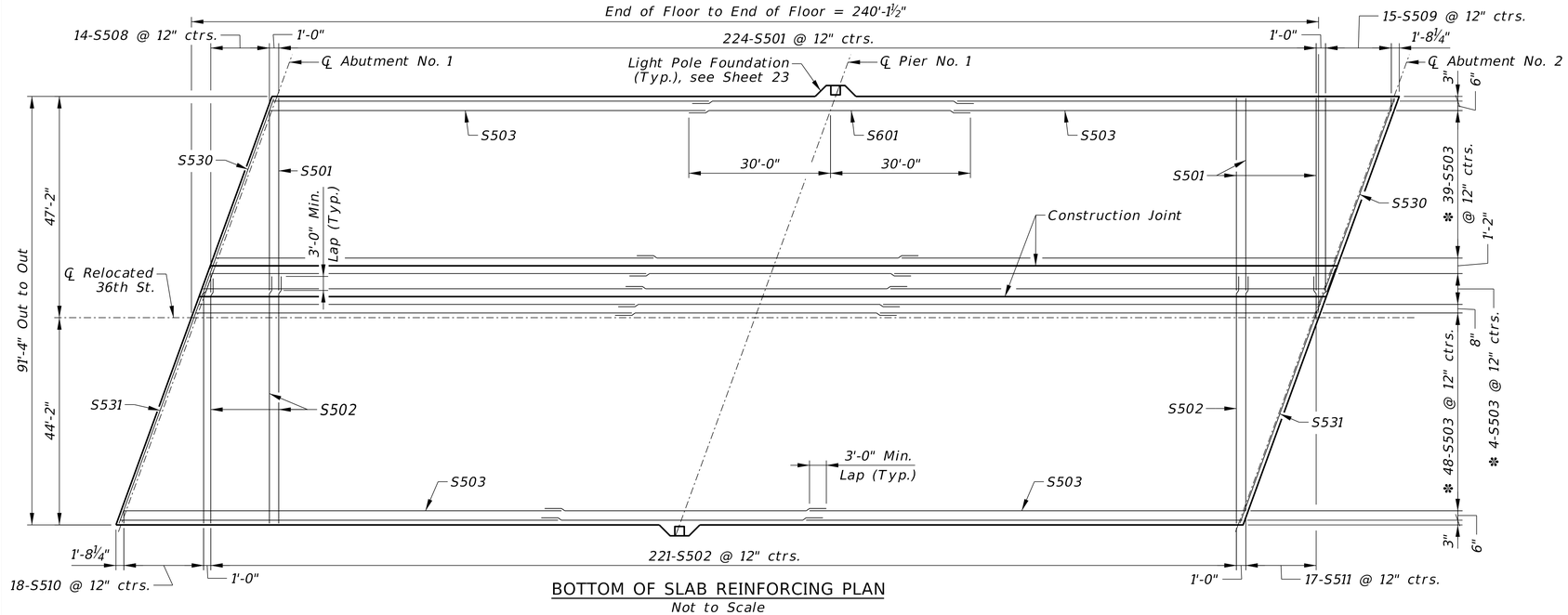

BOTTOM OF SLAB REINFORCING PLAN

Not to Scale

NOTES:

❊ Lap with S601 over Pier.

▲ Place 2-S701 bars equally spaced between S601 bars. See Sheet 17 for placement details.

PRELIMINARY PLAN
NOT FINAL - SUBJECT TO CHANGE

HDR Engineering Inc.
1917 South 67th Street
Omaha, NE 68106
Office: 402-399-1000
Nebraska C.O.A. CA-0443

S49

PROJECT NUMBER
C-77 (25-15)

C.N.

LOCATION
SOUTH SARPY EXPRESSWAY

STRUCTURE NUMBER

SLAB REINFORCING LAYOUT

238'-0" 2-SPAN PRESTRESSED CONCRETE GIRDER BRIDGE (NU1600)

SKEW 20° RHB
ROADWAY Varies WB/Varies EB
FHWA CONST. TYPE X281
DESIGN LIVE LOAD HL-93
DESIGN CODE LRFD 9th Edition
STA. 112+46.01
REF. POST. ---
HWY. NO. ---
COUNTY SARPY

DESIGNED BY: M. Wagner-Loos DETAILED BY: T. Sas
Q.C. ENGINEER: K. Devkota DATE MARCH 2026

SPECIAL PLAN NO. 2

18 / 32

Computer: 2MQ5130W92
Date: 13-FEB-2026 11:24
File: NDOT_2D_SP2.dgn

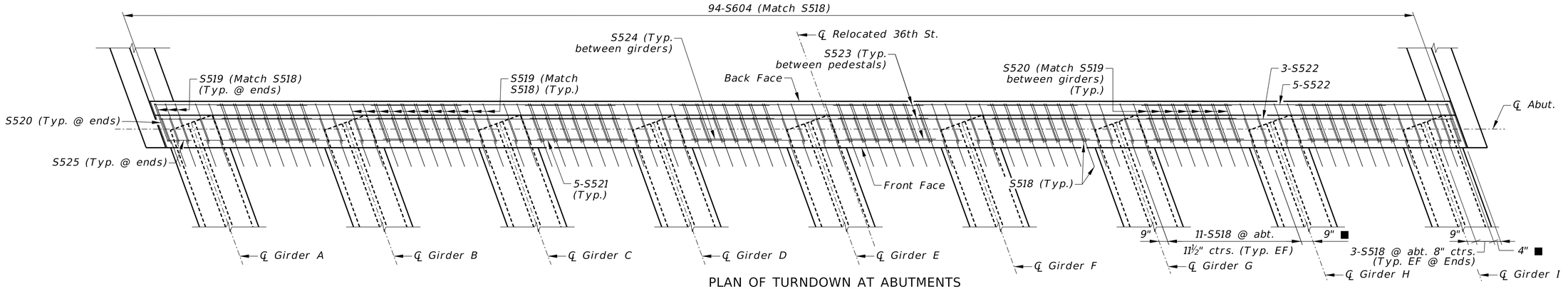

PLAN OF TURNDOWN AT ABUTMENTS
(Showing Abutment No. 2, Abutment No. 1 similiar)
(Shown at top of wing)

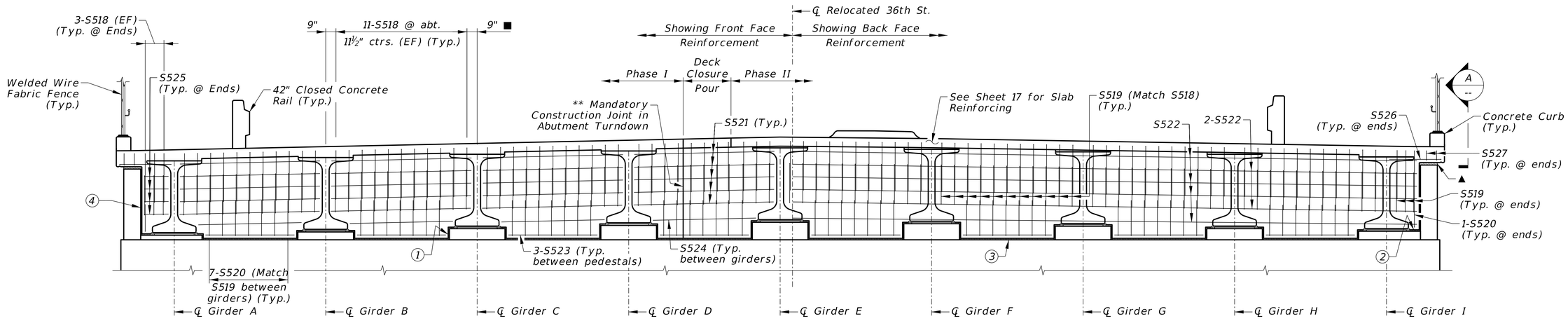

ELEVATION OF TURNDOWN AT ABUTMENTS
(Showing Abutment No. 2, Abutment No. 1 similiar)

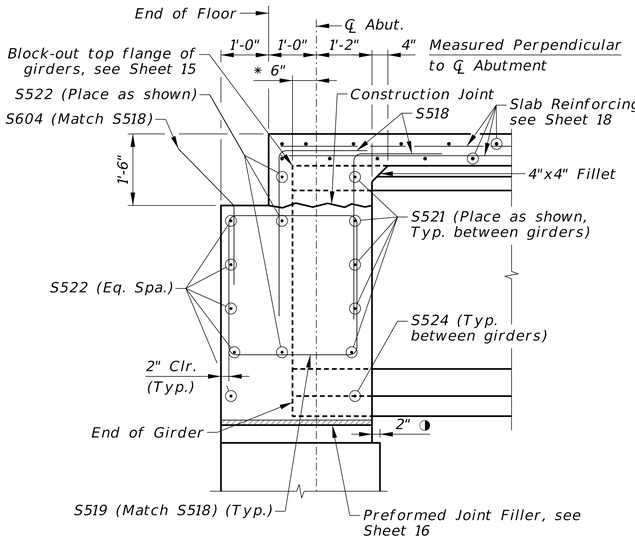

SECTION AT PEDESTALS

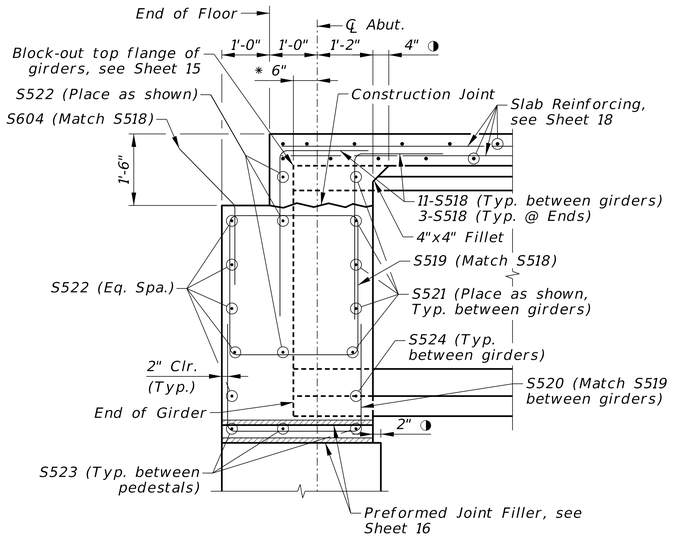

SECTION BETWEEN PEDESTALS

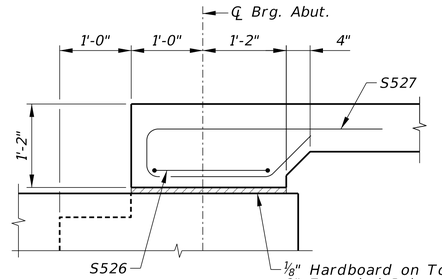

SECTION A

NOTES:

▲ ⅛" Hardboard on Top of 2" Extruded Polystyrene (Subsidiary).

∗ Measured along ℄ of Girder.

■ Measured along ℄ Abutment.

◑ Measured perpendicular to ℄ Abutment.

** The Abutment Turndown within the Phase II and Closure Pour regions shall be placed after the Phase I deck, and before the Phase II deck.

① ½" Preformed Joint Filler or Extruded Polystyrene Typical on Pedestal Vertical Faces.

② 1¼" Preformed Joint Filler or Extruded Polystyrene (Typ.).

③ 1" Preformed Joint Filler or Extruded Polystyrene (Typ.).

④ 1" Preformed Joint Filler (Sponge Rubber Type) (Typ. between Wing and Turndown for full width of Turndown).

PRELIMINARY PLAN
NOT FINAL - SUBJECT TO CHANGE

HDR Engineering Inc.
1917 South 67th Street
Omaha, NE 68106
Office: 402-399-1000
Nebraska C.O.A. CA-0443

S50

PROJECT NUMBER
C-77 (25-15)

C.N.

LOCATION
SOUTH SARPY EXPRESSWAY

STRUCTURE NUMBER

ABUTMENT TURNDOWN DETAILS
238'-0" 2-SPAN PRESTRESSED CONCRETE GIRDER BRIDGE (NU1600)

SKEW 20° RHB
ROADWAY Varies WB/Varies EB
FHWA CONST. TYPE X281
DESIGN LIVE LOAD HL-93
DESIGN CODE LRFD 9th Edition
STA. 112+46.01
REF. POST. ---
HWY. NO. ---
COUNTY SARPY

DESIGNED BY: M. Wagner-Loos DETAILED BY: T. Sas Q.C. ENGINEER: K. Devkota DATE MARCH 2026

SPECIAL PLAN NO. 2

19/32

Computer: 2MQ5130W92
Date: 13-FEB-2026 11:24
File: NDOT_2D_SP2.dgn

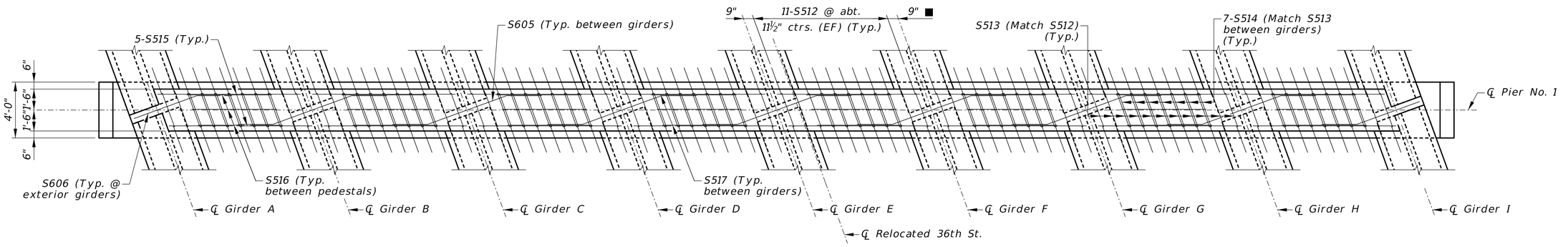

PLAN OF DIAPHRAGM AT PIER NO. 1

(Pier dowel bars not shown for clarity)

NOTE:
Slab reinforcing not shown for clarity.

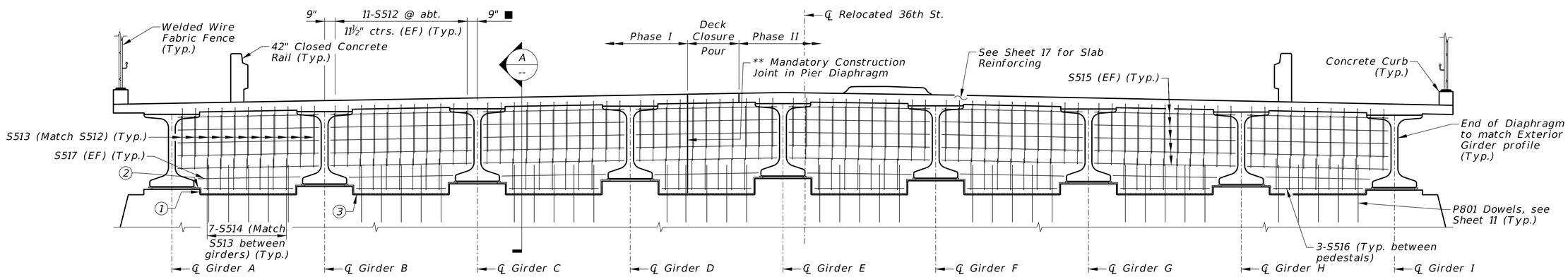

ELEVATION OF DIAPHRAGM AT PIER NO. 1

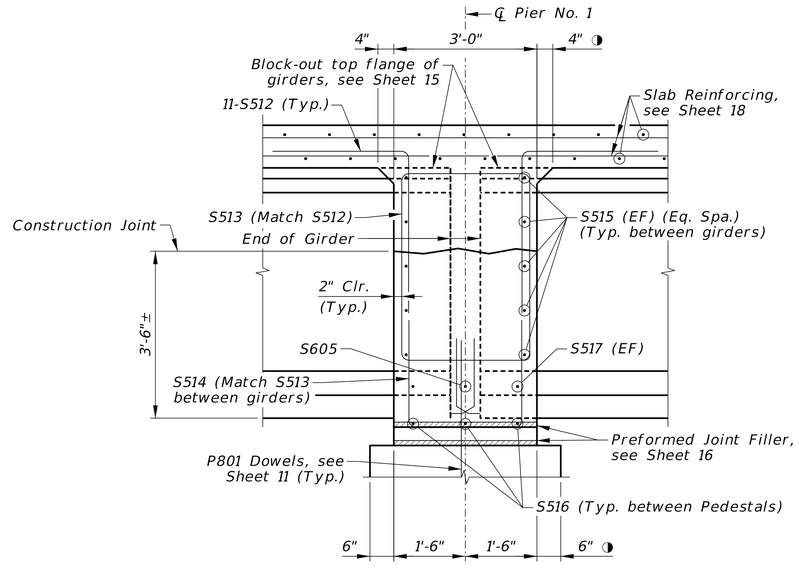

SECTION A

NOTES:

(EF) Each Face

■ *Measured along ℄ Pier.*

◑ *Measured perpendicular to ℄ Pier.*

*** The Pier Diaphragm within the Phase II and Closure Pour regions shall be placed after the Phase I deck, and before the Phase II deck.*

① *½" Preformed Joint Filler or Extruded Polystyrene Typical on Vertical Faces.*

② *1¼" Preformed Joint Filler or Extruded Polystyrene (Typ.).*

③ *1" Preformed Joint Filler or Extruded Polystyrene (Typ.).*

PRELIMINARY PLAN
NOT FINAL - SUBJECT TO CHANGE

HDR Engineering Inc.
1917 South 67th Street
Omaha, NE 68106
Office: 402-399-1000
Nebraska C.O.A. CA-0443

S51

PROJECT NUMBER
C-77 (25-15)

C.N.

LOCATION
SOUTH SARPY EXPRESSWAY

STRUCTURE NUMBER

PIER DIAPHRAGM DETAILS

238'-0" 2-SPAN PRESTRESSED CONCRETE GIRDER BRIDGE (NU1600)

SKEW 20° RHB
ROADWAY Varies WB/Varies EB
FHWA CONST. TYPE X281
DESIGN LIVE LOAD HL-93
DESIGN CODE LRFD 9th Edition
STA. 112+46.01
REF. POST. ---
HWY. NO. ---
COUNTY SARPY

Q.C. ENGINEER: K. Devkota
DATE MARCH 2026
DESIGNED BY: M. Wagner-Loos
DETAILED BY: T. Sas

SPECIAL PLAN NO. 2

20/32

Computer: 2MQ5130W92
Date: 13-FEB-2026 11:24
File: NDOT_2D_SP2.dgn

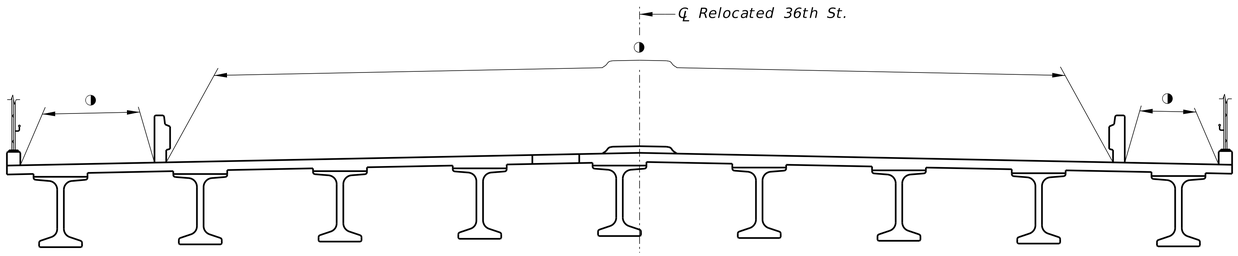

NOTE:

◑ Deck Surface Treatment shall be applied to the bridge deck to the limits shown from end of paving to end of paving on the bridge structure.

LIMITS OF DECK SURFACE TREATMENT

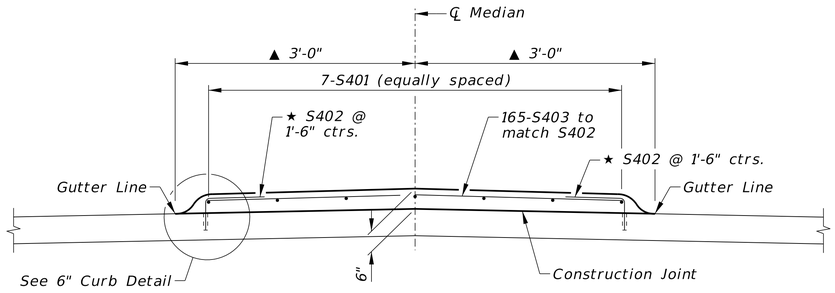

PROVIDE 2" COVER FOR ALL MEDIAN REINFORCEMENT

★ Drill hole into existing concrete, and fill with an approved resin adhesive prior to inserting bar. See Special Provisions. Follow resin manufacturer's recommendations for hole depth and diameter. Bar length based on a 6" deep hole.

▲ Measured perpendicular to ℄ Median.

6" MEDIAN SECTION
Not to Scale

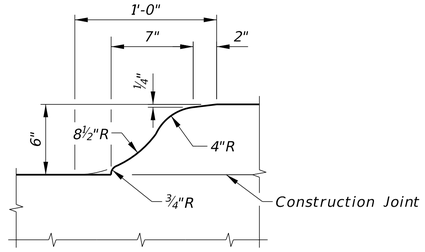

6" CURB DETAIL
Not to Scale

WEST MEDIAN CONTROL LINE		
	℄ Relocated 36th St.	Offset
W.P.1	Sta. 112+49.61	3.00' Rt.
W.P.2	Sta. 112+91.49	2.88' Lt.
W.P.3	Sta. 113+35.02	9.00' Lt.

EAST MEDIAN CONTROL LINE		
	℄ Relocated 36th St.	Offset
W.P.4	Sta. 112+49.61	9.00' Rt.
W.P.5	Sta. 112+93.14	2.88' Rt.
W.P.6	Sta. 113+35.02	3.00' Lt.

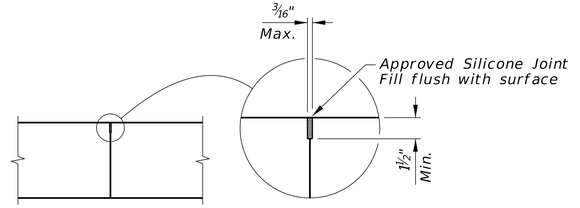

NOTES:

The Contractor shall prepare and seal the joint according to the manufacturer's recommendations.

Before sealing, the joint wall surfaces shall be sandblasted to remove any loose particles and concrete dust.

After sandblasting, the entire joint shall be cleaned with compressed air having a minimum pressure of 90 psi. The compressed air shall be free of any contaminants.

The joint shall be dry at the time of sealing.

SLAB CONSTRUCTION JOINT
Not to Scale

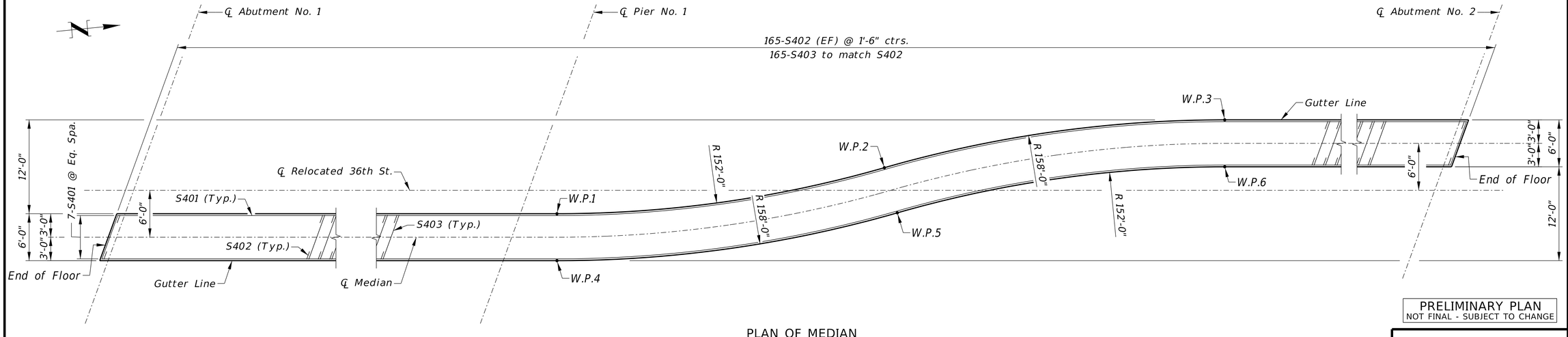

PLAN OF MEDIAN

PRELIMINARY PLAN
NOT FINAL - SUBJECT TO CHANGE

HDR Engineering Inc.
1917 South 67th Street
Omaha, NE 68106
Office: 402-399-1000
Nebraska C.O.A. CA-0443

S52

PROJECT NUMBER
C-77 (25-15)

C.N.

LOCATION
SOUTH SARPY EXPRESSWAY

STRUCTURE NUMBER

SLAB DETAILS

COUNTY SARPY
HWY. NO. ---
REF. POST. ---
STA. 112+46.01
DESIGN CODE LRFD 9th Edition

SKEW 20° RHB
ROADWAY Varies WB/Varies EB
FHWA CONST. TYPE X281
DESIGN LIVE LOAD HL-93

DESIGNED BY: M. Wagner-Loos
DETAILED BY: T. Sas
Q.C. ENGINEER: K. Devkota
DATE MARCH 2026

SPECIAL PLAN NO. 2

21/32

Computer: 2MQ5130W92
Date: 13-FEB-2026 11:24
File: NDOT_2D_SP2.dgn

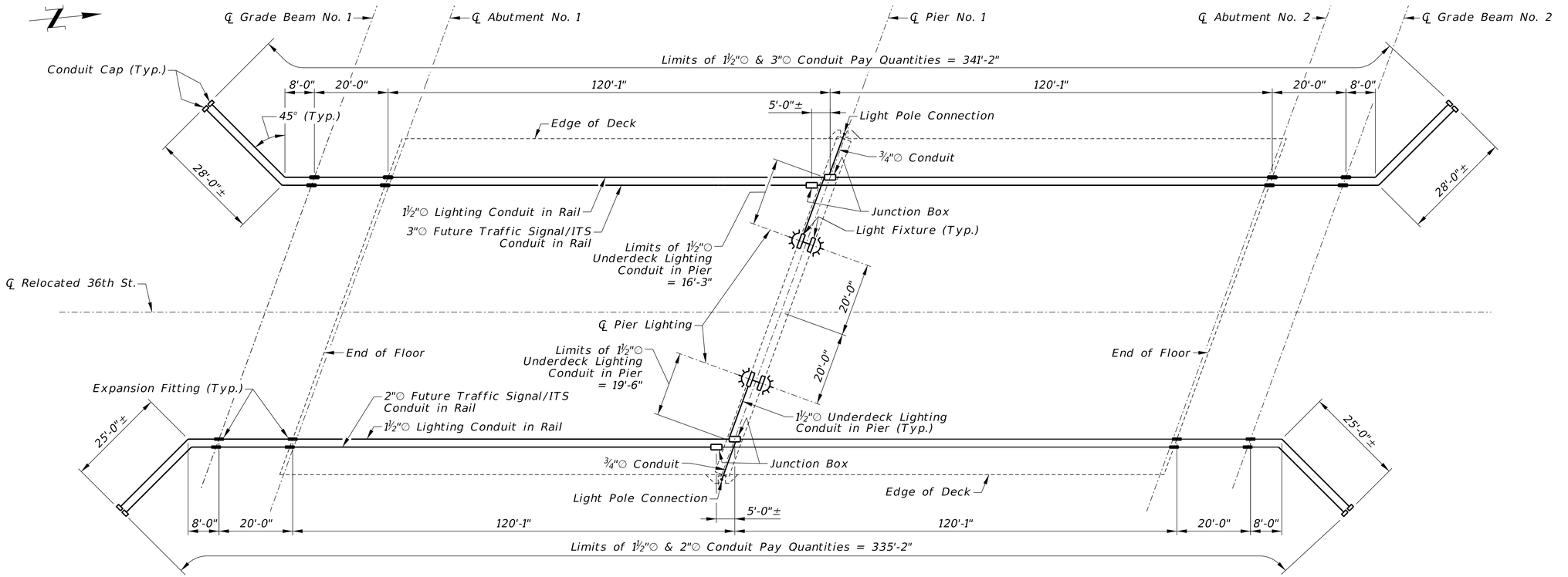

CONDUIT LINE DIAGRAM
Not to Scale

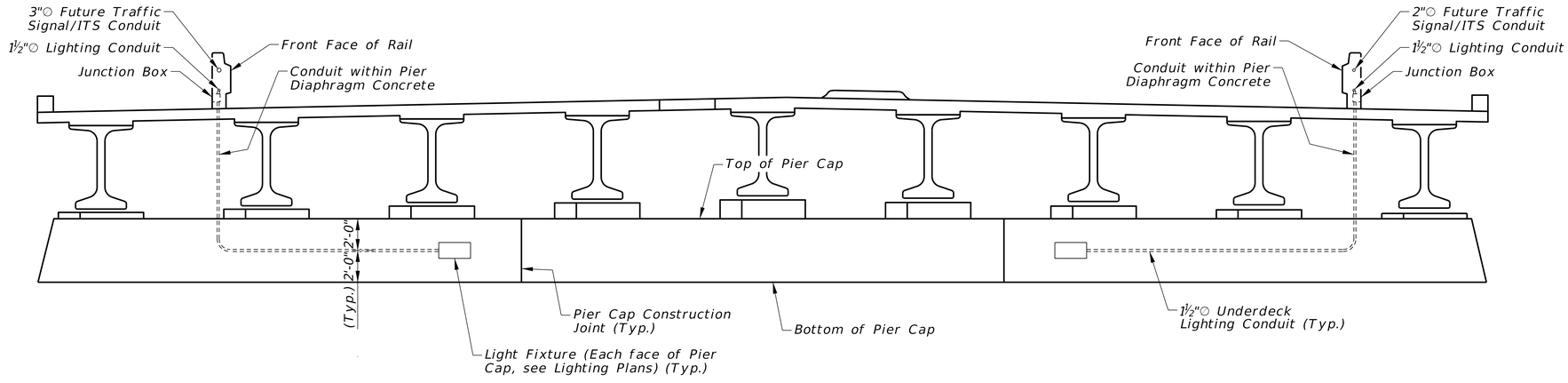

ELEVATION OF UNDERDECK LIGHTING CONDUIT IN PIER CAP
Not to Scale

PRELIMINARY PLAN
NOT FINAL - SUBJECT TO CHANGE

HDR Engineering Inc.
1917 South 67th Street
Omaha, NE 68106
Office: 402-399-1000
Nebraska C.O.A. CA-0443

S53

PROJECT NUMBER
C-77 (25-15)

C.N.

LOCATION
SOUTH SARPY EXPRESSWAY

STRUCTURE NUMBER

CONDUIT LAYOUT

238'-0" 2-SPAN PRESTRESSED CONCRETE GIRDER BRIDGE (NU1600)

SKEW 20° RHB
ROADWAY Varies WB/Varies EB
FHWA CONST. TYPE X281
DESIGN LIVE LOAD HL-93
DESIGN CODE LRFD 9th Edition
STA. 112+46.01
REF. POST. ---
HWY. NO. ---
COUNTY SARPY

DESIGNED BY: R. Paradis
DETAILED BY: E. Sorens
Q.C. ENGINEER: M. Wagner-Loos
DATE MARCH 2026

SPECIAL PLAN NO. 2

22/32

Computer: 2MQ5130W92
Date: 13-FEB-2026 11:24
File: NDOT_2D_SP2.dgn

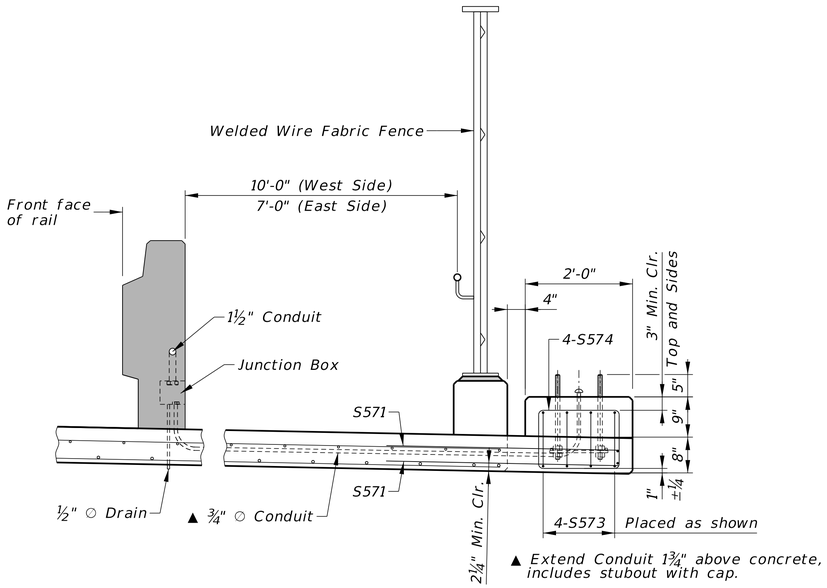

SECTION OF STANDARD LIGHT POLE FOUNDATION

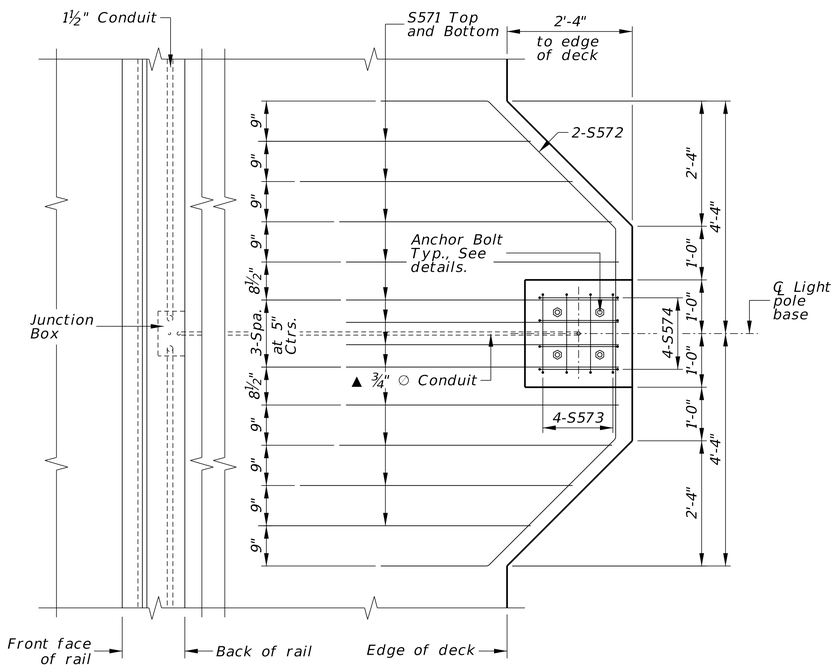

PLAN OF STANDARD LIGHT POLE FOUNDATION

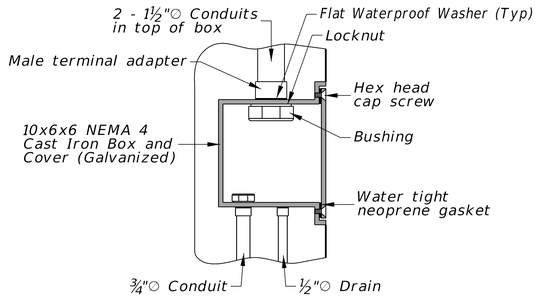

JUNCTION BOX

(Junction Box for Lighting Conduit shown, Future Traffic Signal/ITS Conduit similar)

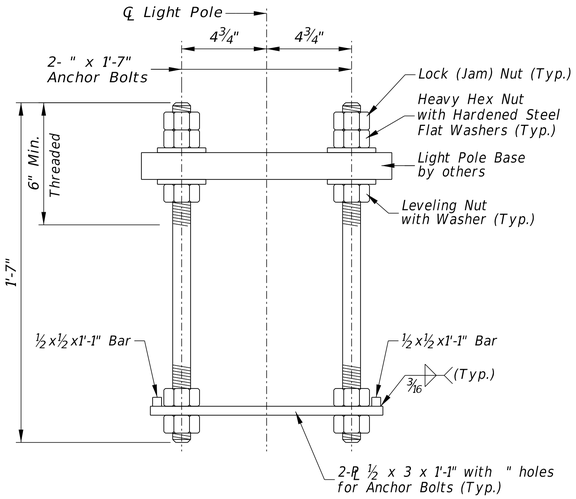

ELEVATION OF ANCHOR BOLTS

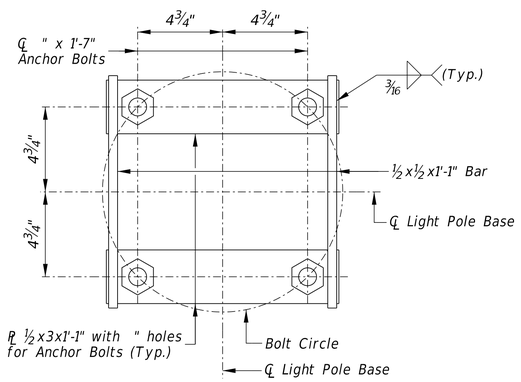

ANCHOR BOLT LAYOUT

NOTE:
Install one drain between each Junction Box and Abutments. Electrical Conduit shall be placed in such a manner as to provide a low spot at this point.

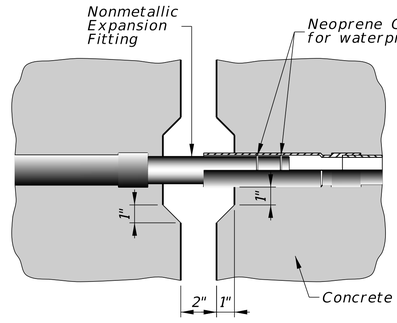

EXPANSION FITTING (4" max. Movement)

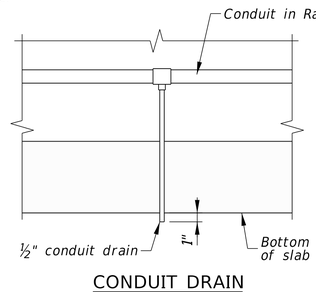

CONDUIT DRAIN

ELECTRICAL CONDUIT NOTES

All conduit shall be P.V.C. and bear the U.L. label, with the exception that conduit stub outs shall be Type GRS or IMC.

All fittings used with P.V.C. conduit shall be P.V.C. Metallic fittings are not acceptable.

Expansion fittings shall be installed with conduit positioned with respect to ambient temperature and shall bear the U.L. label.

Conduit bends, elbows, and offsets shall be accurately formed.

The conduit installation shall be performed by or under the direct supervision of a competent Journeyman Electrician or Lineman.

Junction boxes for bridge conduit systems shall be manufactured of machineable quality, gray cast iron, outside-flanged with recessed gasketed cover. Boxes shall be NEMA 4 rated, and have a hot dipped galvanized finish. Cover screws shall be hex head stainless steel or brass. Each junction box shall be provided with a drain pipe. Conduit entrances into the junction box shall be slip holes. Sealing type lock nuts shall be used at all conduit entrances.

Junction boxes shall be type "YR" as manufactured by O.Z. Gedney Company, type "ER" or as manufactured by Spring City Electrical Mfg. Company, Series "WJBF" as manufactured by Cooper Crouse-Hinds, or approved equal.

Junction boxes, outlet boxes, expansion fittings, all ¾" conduit, conduit drains, couplings, anchor bolt assemblies and all other hardware and miscellaneous fittings required for the installation of the conduit system will be subsidiary to the Pay Items, "1½" CONDUIT IN BRIDGE", "2" CONDUIT IN BRIDGE", AND "3" CONDUIT IN BRIDGE".

Fittings used with Liquidtight Flexible Metal Conduit must be approved for the application.

Anchor bolts shall conform to the requirements of AASHTO M 314, Grade 55 or equivalent steel (length as shown).

Anchor bolts shall be threaded 6" on both ends.

Each anchor bolt shall be furnished complete with five heavy hex nuts meeting the requirements of ASTM A_563, Grade A and two hardened steel flat washers conforming to the requirements of ASTM F_436, Type 1. Only flat washers will be used. The use of lock washers will not be permitted.

All bolts, nuts, washers, and the lower anchorage plate assembly shall be galvanized in accordance with the applicable sections of ASTM A_123 and ASTM 563.

The contractor shall furnish a certification stating that the anchorage bolt material meets the requirements of the applicable specifications. The certification shall include a report of the tensile test results and chemical analysis. The report shall also include the name of the steel producer, AASHTO or ASTM designation number, grade, heat number, size and authorized signature.

Conduit drains with 1" projection from the concrete face, must be provided at each junction box and at low spots in the electrical conduit.

PRELIMINARY PLAN
NOT FINAL - SUBJECT TO CHANGE

HDR Engineering Inc.
1917 South 67th Street
Omaha, NE 68106
Office: 402-399-1000
Nebraska C.O.A. CA-0443

S54

PROJECT NUMBER
C-77 (25-15)

C.N.

LOCATION
SOUTH SARPY EXPRESSWAY

STRUCTURE NUMBER

CONDUIT DETAILS
CONCRETE GIRDER BRIDGE (NU1600)
238'-0" 2-SPAN PRESTRESSED

COUNTY SARPY
HWY. NO. ---
REF. POST. ---
STA. 112+46.01
DESIGN CODE LRFD 9th Edition
SKEW 20° RHB
ROADWAY Varies WB\Varies EB
FHWA CONST. TYPE X281
DESIGN LIVE LOAD HL-93
DESIGNED BY: R. Paradis
DETAILED BY: E. Sorens
Q.C. ENGINEER: M. Wagner-Loos
DATE MARCH 2026

SPECIAL PLAN NO. 2
23/32

Computer: 2MQS130W92
Date: 13-FEB-2026 11:24
File: NDOT_2D_SP2.dgn

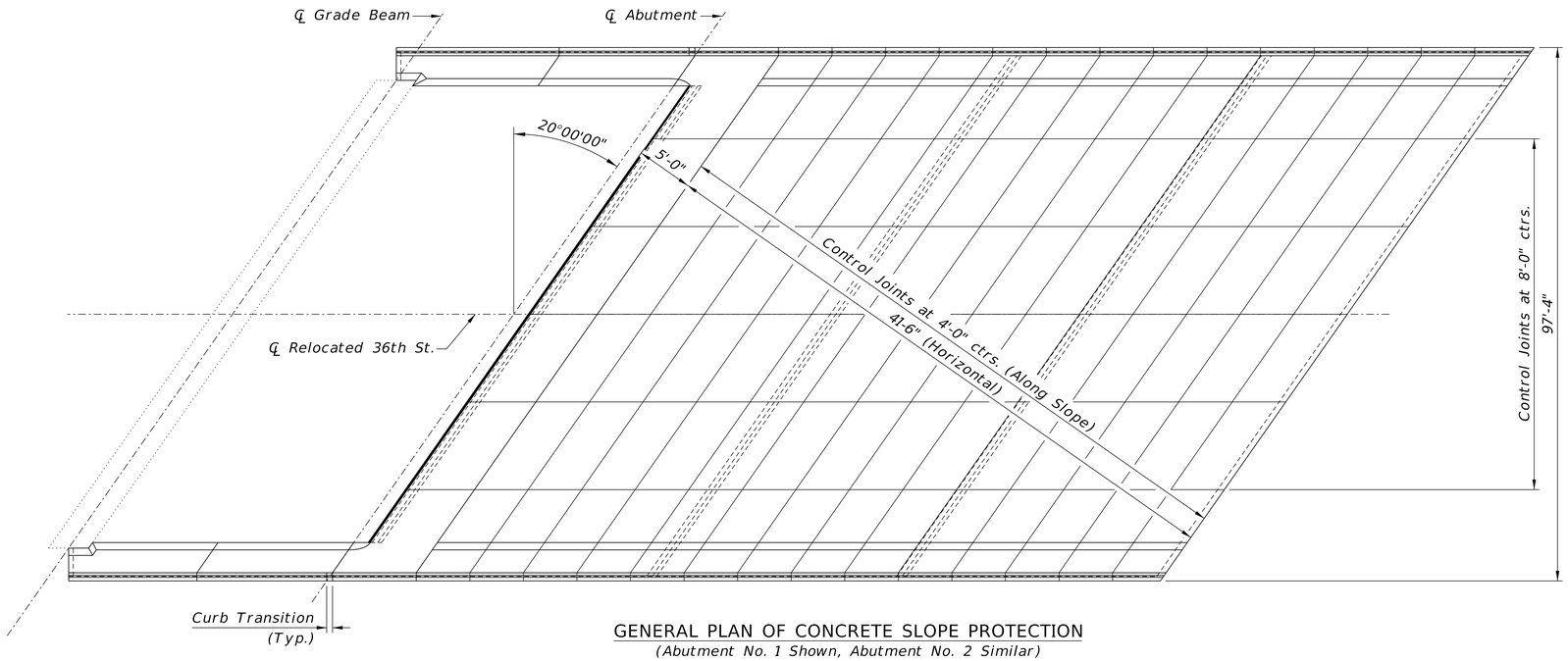

GENERAL PLAN OF CONCRETE SLOPE PROTECTION

(Abutment No. 1 Shown, Abutment No. 2 Similar)
Not to Scale

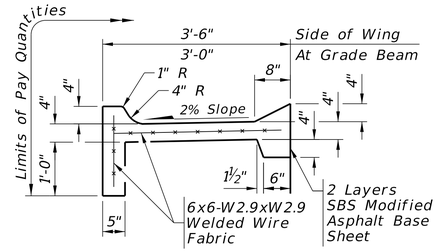

EDGE DETAIL AT AND ABOVE ABUTMENT

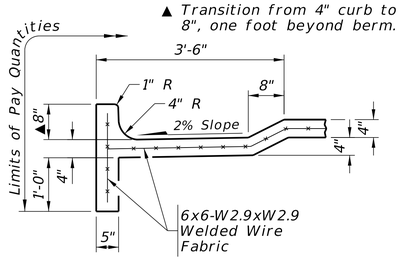

EDGE DETAIL BELOW ABUTMENT

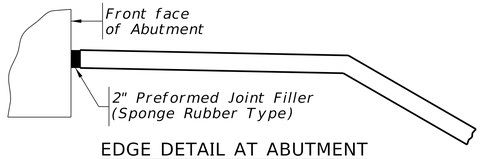

EDGE DETAIL AT ABUTMENT

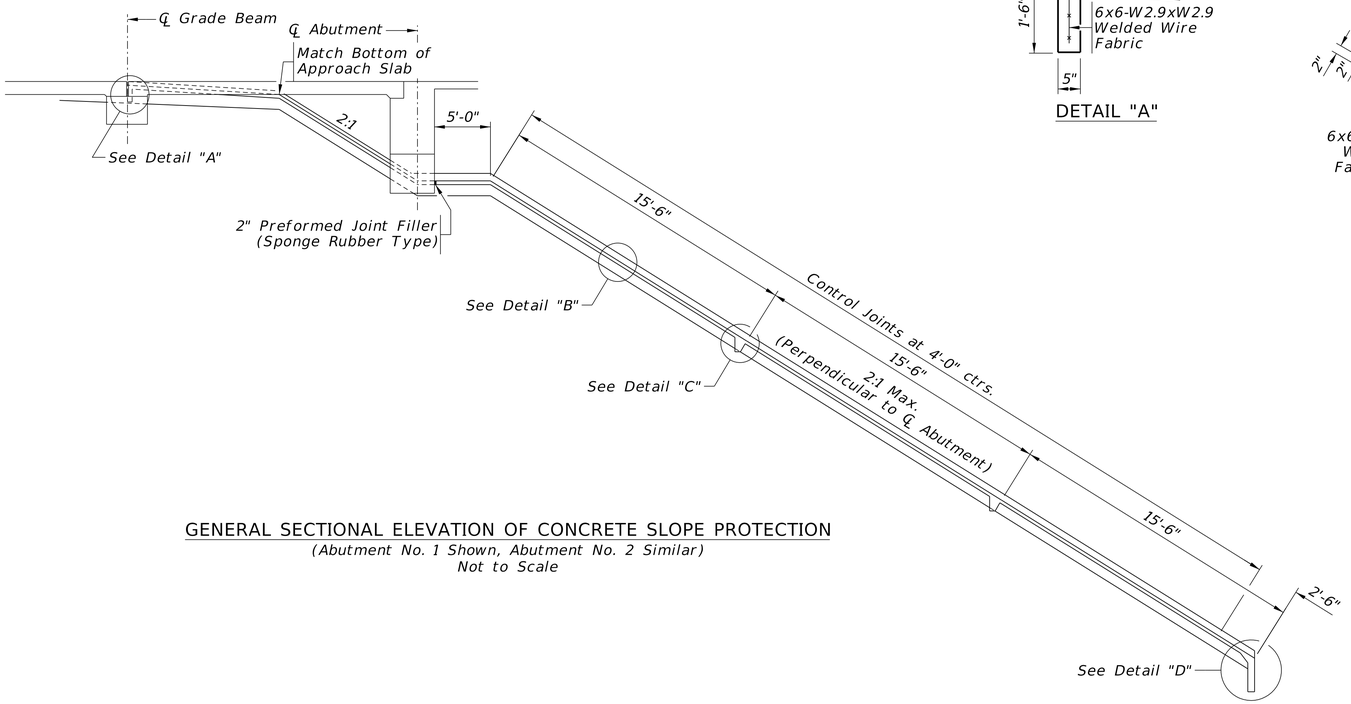

GENERAL SECTIONAL ELEVATION OF CONCRETE SLOPE PROTECTION

(Abutment No. 1 Shown, Abutment No. 2 Similar)
Not to Scale

DETAIL "A"

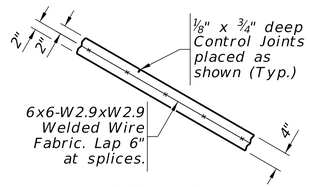

DETAIL "B"

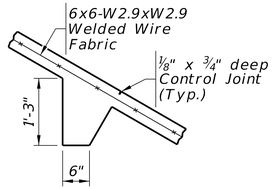

DETAIL "C"

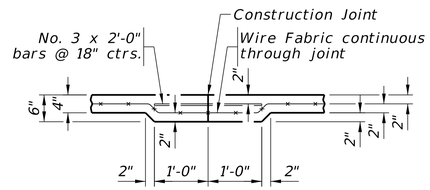

OPTIONAL CONSTRUCTION JOINT

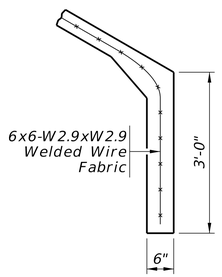

DETAIL "D"

NOTES

The SBS Asphalt Base Sheets and the Preformed Joint Filler (Sponge Rubber Type), shall not be paid for directly, but shall be considered subsidiary to the Pay Item, "CONCRETE SLOPE PROTECTION".

See Sheet 2 for Slope Protection Elevations.

PRELIMINARY PLAN
NOT FINAL - SUBJECT TO CHANGE

HDR Engineering Inc.
1917 South 67th Street
Omaha, NE 68106
Office: 402-399-1000
Nebraska C.O.A. CA-0443

S55

PROJECT NUMBER
C-77 (25-15)

C.N.

LOCATION
SOUTH SARPY EXPRESSWAY

STRUCTURE NUMBER

238'-0" 2-SPAN PRESTRESSED CONCRETE GIRDER BRIDGE (NU1600)

CONCRETE SLOPE PROTECTION DETAILS

COUNTY SARPY
HWY. NO. ---
REF. POST. ---
STA. 112+46.01
DESIGN CODE LRFD 9th Edition

SKEW 20° RHB
ROADWAY Varies WB\Varies EB
FHWA CONST. TYPE X281
DESIGN LIVE LOAD HL-93

DESIGNED BY: R. Paradis
DETAILED BY: E. Sorens
Q.C. ENGINEER: M. Wagner-Loos
DATE MARCH 2026

SPECIAL PLAN NO. 2

24/32

Computer: 2MQS130W92
Date: 13-FEB-2026 11:24
File: NDOT_2D_SP2.dgn

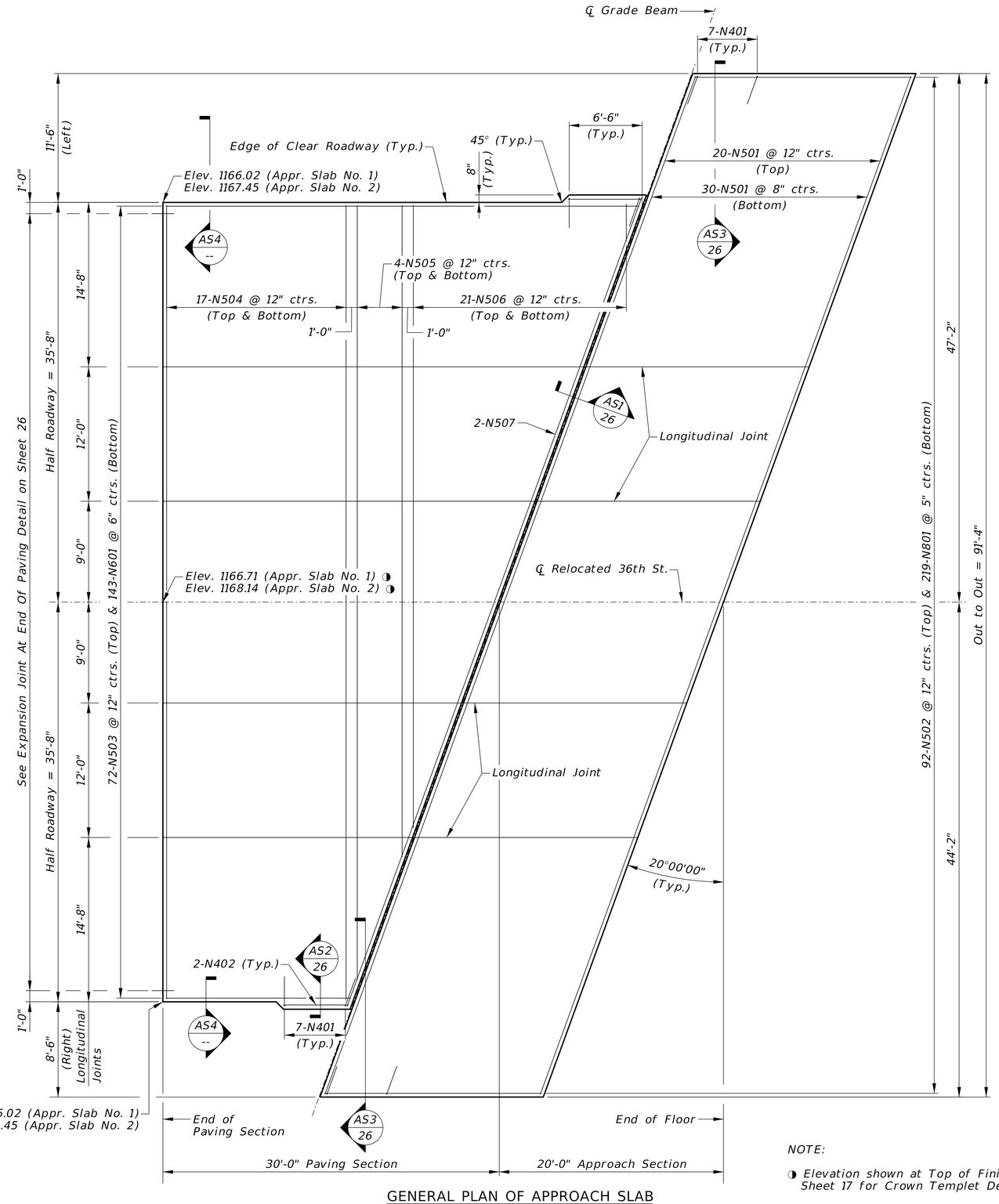

GENERAL PLAN OF APPROACH SLAB

Approach Slab No. 1 Shown, Approach Slab No. 2 Similar & Opposite

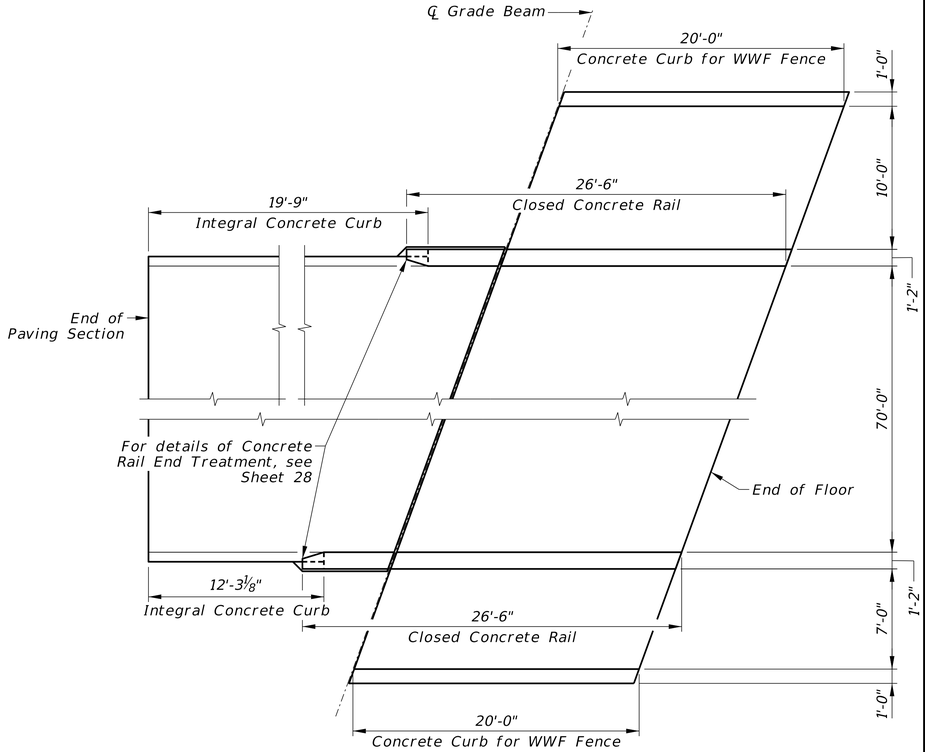

CONCRETE RAIL/CURB LAYOUT

Approach Slab No. 1 Shown, Approach Slab No. 2 Similar & Opposite

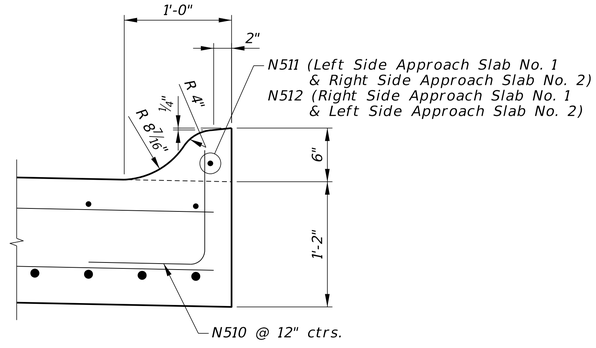

SECTION AS4

(Integral Concrete Curb)

NOTE:

◑ *Elevation shown at Top of Finished Slab. See Sheet 17 for Crown Templet Detail.*

PRELIMINARY PLAN
NOT FINAL - SUBJECT TO CHANGE

HDR Engineering Inc.
1917 South 67th Street
Omaha, NE 68106
Office: 402-399-1000
Nebraska C.O.A. CA-0443

S56

PROJECT NUMBER
C-77 (25-15)

C.N.

LOCATION
SOUTH SARPY EXPRESSWAY

STRUCTURE NUMBER

238'-0" 2-SPAN PRESTRESSED CONCRETE GIRDER BRIDGE (NU1600)

APPROACH SLAB DETAILS (1 OF 3)

SKEW 20° RHB
ROADWAY Varies WB/Varies EB
FHWA CONST. TYPE X281
DESIGN LIVE LOAD HL-93
DESIGN CODE LRFD 9th Edition
STA. 112+46.01
REF. POST. ---
HWY. NO. ---
COUNTY SARPY

DESIGNED BY: R. Paradis
DETAILED BY: T. Sas
Q.C. ENGINEER: M. Wagner-Loos
DATE MARCH 2026

SPECIAL PLAN NO. 2

25/32

Computer: 2M05130W92
Date: 13-FEB-2026 11:24
File: NDOT_2D_SP2.dgn

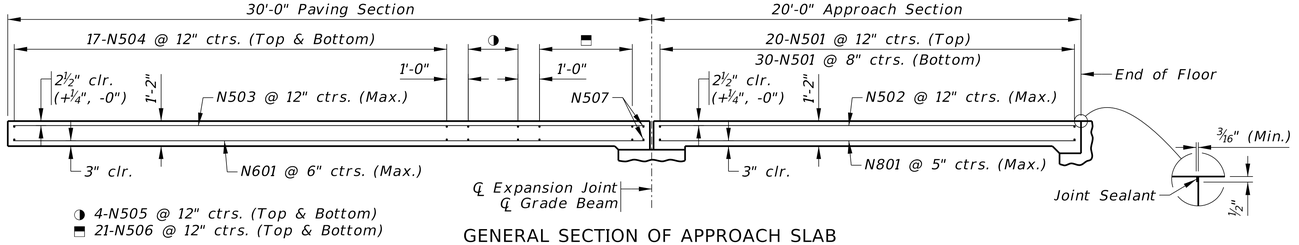

GENERAL SECTION OF APPROACH SLAB

Approach Slab No. 1 Shown, Approach Slab No. 2 Similar & Opposite

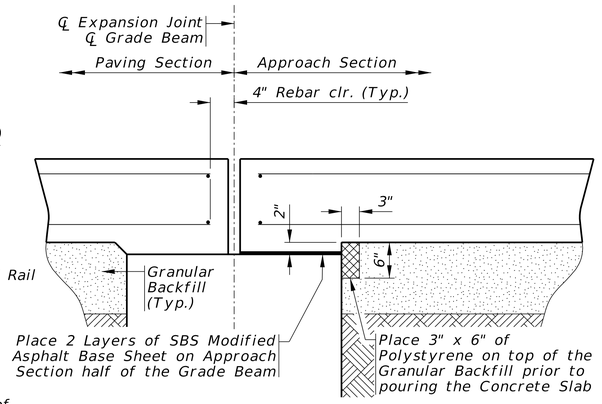

SECTION AS1

Typical at Grade Beam
Not to Scale

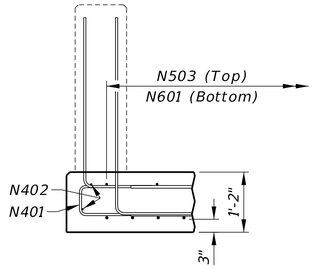

SECTION AS2

Typical

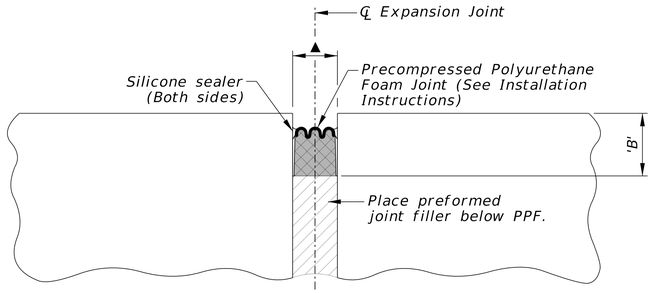

SECTION AT EXPANSION JOINT

Not to Scale

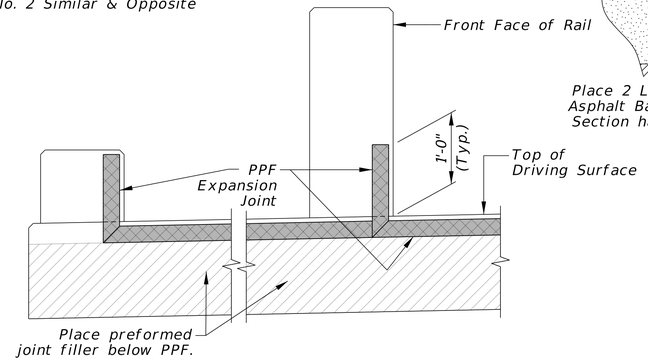

JOINT DETAIL AT RAIL

Not to Scale

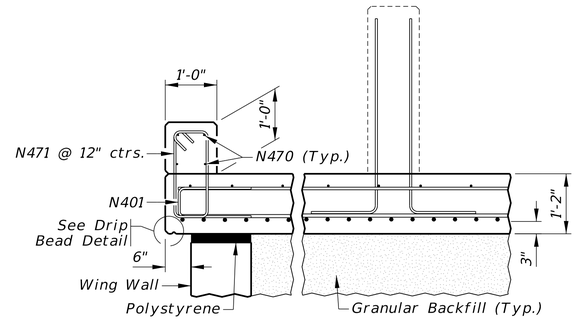

SECTION AS3

Typical

EXPANSION JOINT GAP DIMENSIONS	
AMBIENT TEMPERATURE RANGE DURING POUR (°F)	▲ *Gap Width*
35 - 40	*2¼"*
40 - 60	*2"*
60 - 85	*1¾"*

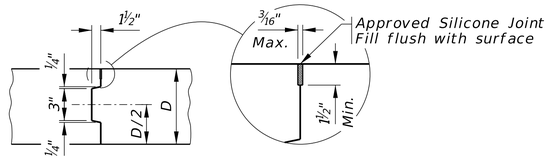

CONSTRUCTION JOINT

Not to Scale

EXPANSION JOINT NOTES:

▲ *Nominal Joint Opening at time of pour. Adjust for temperature as shown in the table. Dimensions measured Normal to ℄ Expansion Joint.*

PPF Joint Nominal Material Size to be ordered for a 50° opening +¼".

Dimension 'B' provided by Expansion Joint manufacturer.

PPF JOINT - INSTALLATION INSTRUCTIONS

1. *Correctly form and cure the expansion joint gap.*
2. *Sandblast gap surfaces to clean and prepare.*
3. *Thoroughly clean gap with compressed air and solvent-dampened rags to remove all dust and contaminants.*
4. *Apply manufacturer's epoxy adhesive to gap surfaces, as instructed. Make sure to install joint before epoxy adhesive begins to cure.*
5. *Push first section of PPF Joint down into place, working a few feet at a time. Leave end to be spliced sticking out of gap.*
6. *Install next section of PPF, working towards previously installed section. Push spliced ends tightly together, and set splice in place. Connect silicone facings together per manufacturers instructions.*
7. *Repeat process for additonal sections of PPF Joint. Measure and cut final section of PPF Joint as needed.*
8. *Once seal is fully placed, apply silicone sealer to top corners of joint. Force tip of caulking gun into corner to completely fill.*

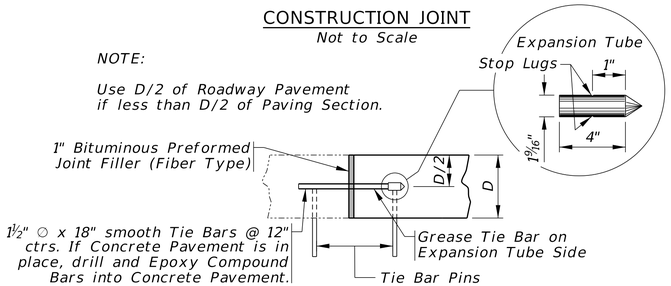

JOINT AT END OF PAVING SECTION

Not to Scale

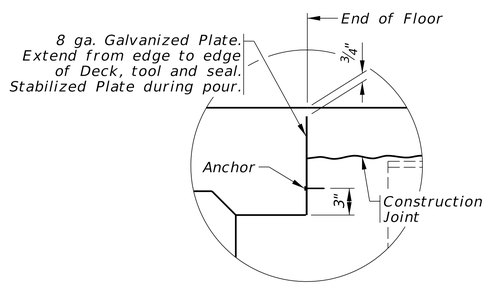

ALTERNATE JOINT DETAIL AT END OF FLOOR

(To be used if Approach Slab is poured continuous with Bridge Deck)
Not to Scale

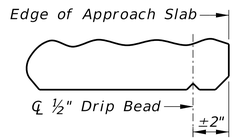

DRIP BEAD DETAIL

Not to Scale

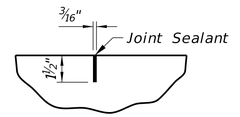

LONGITUDINAL JOINT DETAIL

Not to Scale

APPROACH SLAB NOTES:

See Concrete Rail sheets for placement of Rail Reinforcement.

SBS Modified Asphalt Base Sheets and all other miscellaneous items shall be considered subsidiary to the Pay Item, CONCRETE FOR PAVEMENT APPROACHES CLASS 47BD-4000.

SBS Modified Asphalt Base Sheets shall be modified bitumen roofing material, with a minimum thickness of 0.090 inch and a minimum weight of 60 lbs. per 100 sq. feet.

Longitudinal Joints shall be 1½" deep and placed in the paving and approach slabs in accordance with the Standard Specifications. Contractor shall exercise care not to damage reinforcing steel placed in the top layer of the slabs.

PRELIMINARY PLAN
NOT FINAL - SUBJECT TO CHANGE

HDR Engineering Inc.
1917 South 67th Street
Omaha, NE 68106
Office: 402-399-1000
Nebraska C.O.A. CA-0443

S57

PROJECT NUMBER
C-77 (25-15)

C.N.

LOCATION
SOUTH SARPY EXPRESSWAY

STRUCTURE NUMBER

APPROACH SLAB DETAILS (2 OF 3)
238'-0" 2-SPAN PRESTRESSED CONCRETE GIRDER BRIDGE (NU1600)

COUNTY SARPY
HWY. NO. ---
REF. POST. ---
STA. 112+46.01
SKEW 20° RHB
ROADWAY Varies WB/Varies EB
FHWA CONST. TYPE X281
DESIGN LOAD HL-93
DESIGN CODE LRFD 9th Edition
Q.C. ENGINEER: M. Wagner-Loos DATE MARCH 2026
DESIGNED BY: R. Paradis
DETAILED BY: T. Sas

SPECIAL PLAN NO. 2

26/32

Computer: 2MQ5130W92
Date: 13-FEB-2026 11:24
File: NDOT_2D_SP2.dgn

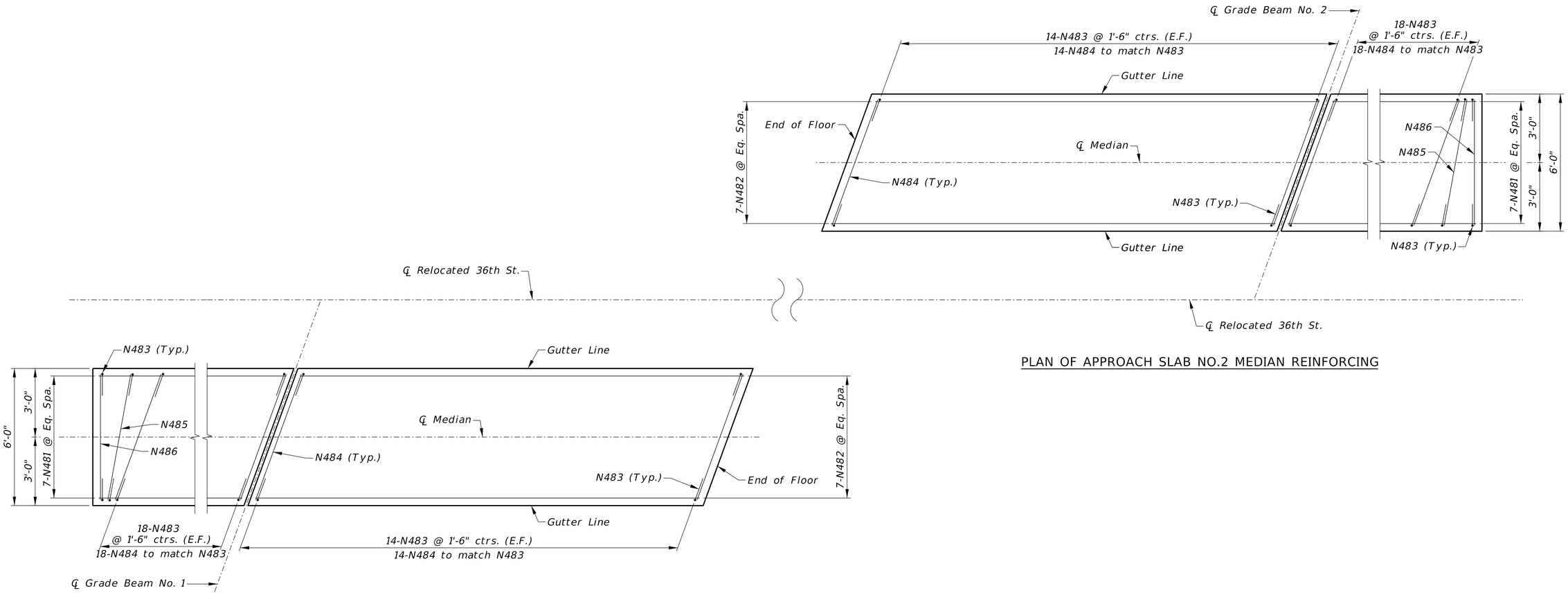

PLAN OF APPROACH SLAB NO.2 MEDIAN REINFORCING

PLAN OF APPROACH SLAB NO.1 MEDIAN REINFORCING

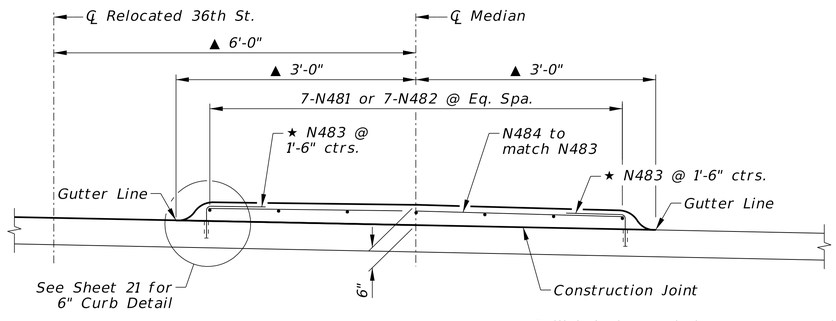

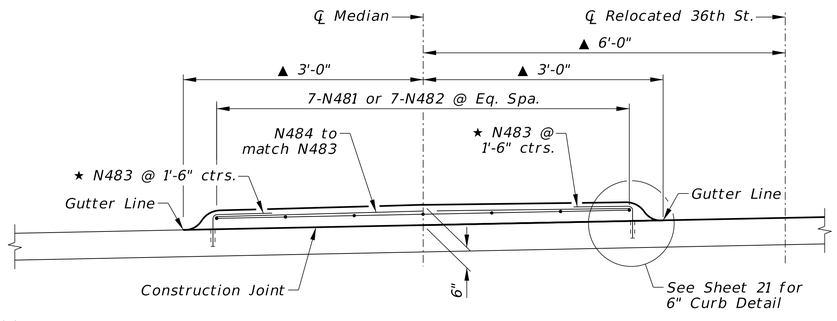

★ Drill hole into existing concrete, and fill with an approved resin adhesive prior to inserting bar. See Special Provisions. Follow resin manufacturer's recommendations for hole depth and diameter. Bar length based on a 6" deep hole.

▲ Measured perpendicular to ℄ Median.

PROVIDE 2" COVER FOR ALL MEDIAN REINFORCEMENT

6" MEDIAN SECTION AT APPROACH SLAB NO. 1
Not to Scale

6" MEDIAN SECTION AT APPROACH SLAB NO. 2
Not to Scale

PRELIMINARY PLAN
NOT FINAL - SUBJECT TO CHANGE

HDR Engineering Inc.
1917 South 67th Street
Omaha, NE 68106
Office: 402-399-1000
Nebraska C.O.A. CA-0443

S58

PROJECT NUMBER
C-77 (25-15)

C.N.

LOCATION
SOUTH SARPY EXPRESSWAY

STRUCTURE NUMBER

238'-0" 2-SPAN PRESTRESSED CONCRETE GIRDER BRIDGE (NU1600)

APPROACH SLAB DETAILS (3 OF 3)

SKEW 20° RHB
ROADWAY Varies WB/Varies EB
FHWA CONST. TYPE X281
DESIGN LIVE LOAD HL-93
DESIGN CODE LRFD 9th Edition
COUNTY SARPY
HWY. NO. ---
REF. POST. ---
STA. 112+46.01

DESIGNED BY: R. Paradis
DETAILED BY: T. Sas
Q.C. ENGINEER: M. Wagner-Loos
DATE MARCH 2026

SPECIAL PLAN NO. 2

Computer: 2MQ5130W92
Date: 13-FEB-2026 11:24
File: NDOT_2D_SP2.dgn

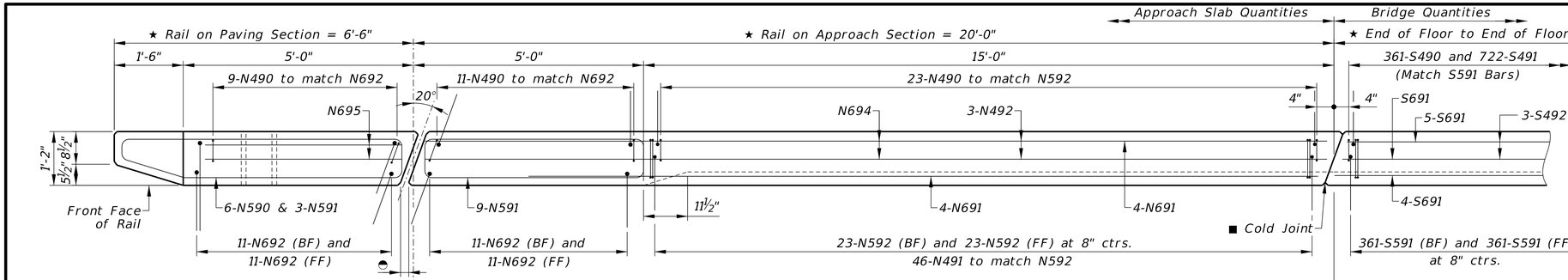

PLAN OF CLOSED CONCRETE RAIL ON BRIDGE AND APPROACH SLABS

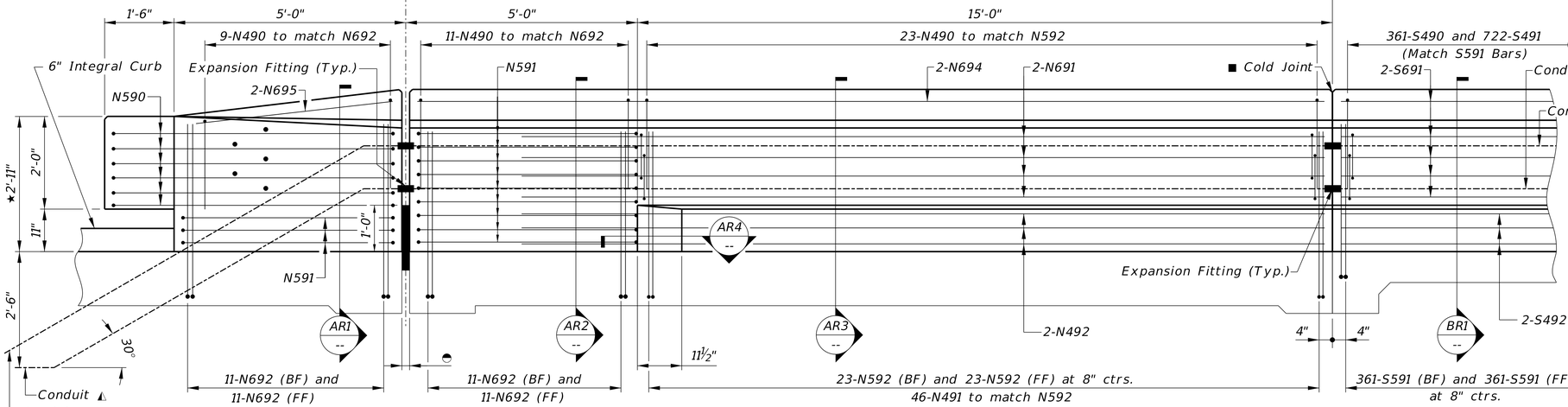

ELEVATION OF CLOSED CONCRETE RAIL ON BRIDGE AND APPROACH SLABS

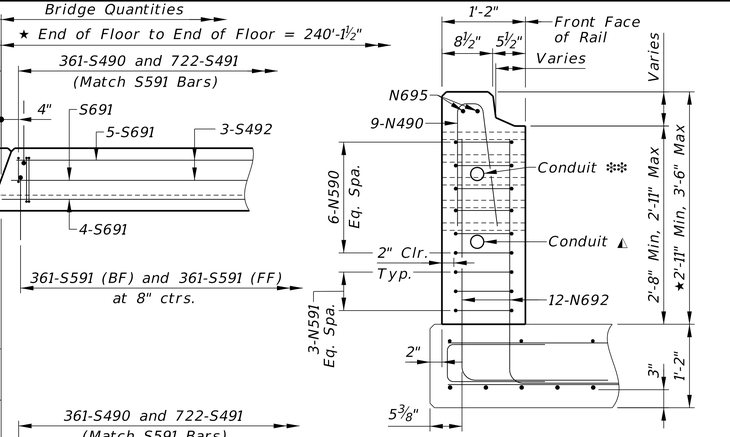

SECTION AR1

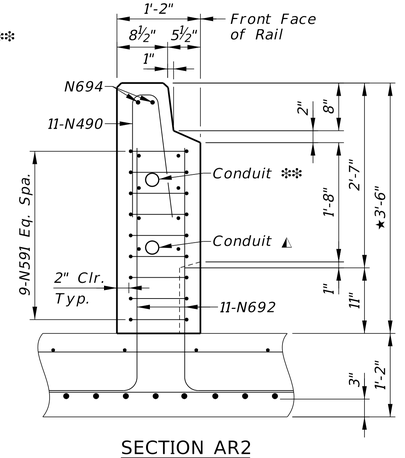

SECTION AR2

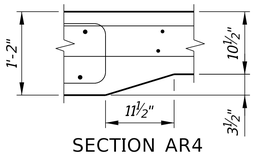

SECTION AR4

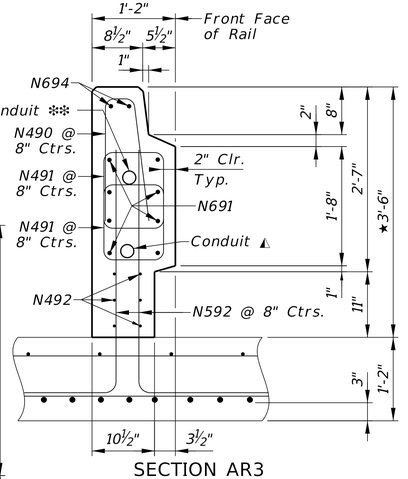

SECTION AR3

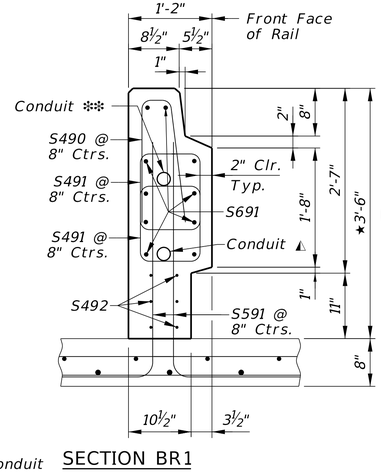

SECTION BR1

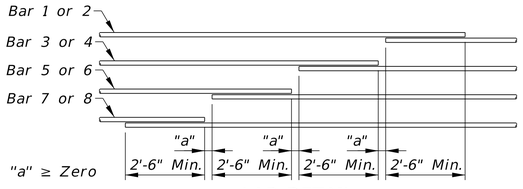

LAP DETAIL
Not to Scale

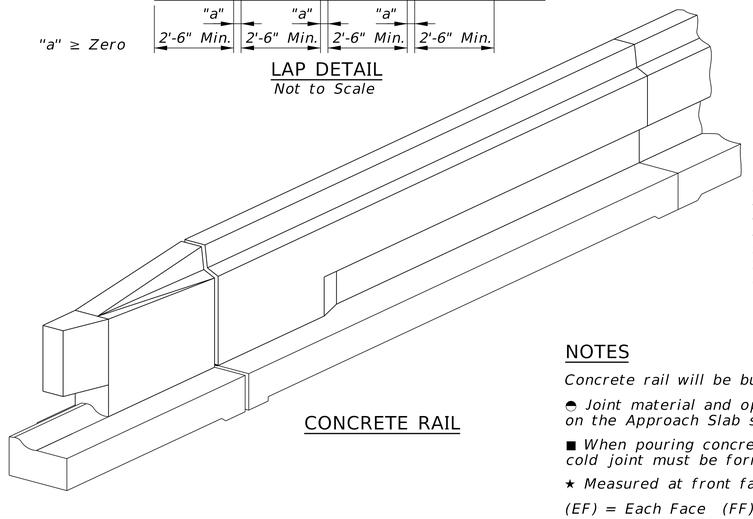

CONCRETE RAIL

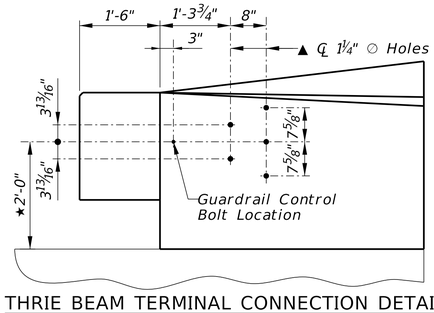

THRIE BEAM TERMINAL CONNECTION DETAIL

▲ *As an alternate method, the contractor shall furnish and cast into the concrete an approved welded assembly consisting of threaded inserts, held accurately to the template of the holes shown. Inserts are to be complete with galvanized plate washers and galvanized ⅞" ∅ x 2" cap screws. The insert assembly shall be a standard product of a reputable manufacturer of such items and be capable of resisting a shear load of 80,000 lbs.*

NOTES

Concrete rail will be built plumb.

◓ *Joint material and opening shall match what is shown on the Approach Slab sheet.*

■ *When pouring concrete rails, a mandatory chamfered cold joint must be formed at the end of floor.*

★ *Measured at front face of rail.*

(EF) = Each Face (FF) = Front Face (BF) = Back Face

NOTES:

◭ *1½"∅ Lighting Conduit in each concrete rail.*

❊❊ *3"∅ Future Traffic Signal/ITS Conduit in west concrete rail; 2"∅ Future Traffic Signal/ITS Conduit in east concrete rail.*

PRELIMINARY PLAN
NOT FINAL - SUBJECT TO CHANGE

HDR Engineering Inc.
1917 South 67th Street
Omaha, NE 68106
Office: 402-399-1000
Nebraska C.O.A. CA-0443

S59

PROJECT NUMBER C-77 (25-15)

C.N.

LOCATION
SOUTH SARPY EXPRESSWAY

STRUCTURE NUMBER

CONCRETE RAIL DETAILS
CONCRETE GIRDER BRIDGE (NU1600)
238'-0" 2-SPAN PRESTRESSED

SKEW 20° RHB
ROADWAY Varies WB/Varies EB
FHWA CONST. TYPE X281
DESIGN LIVE LOAD HL-93
DESIGN CODE LRFD 9th Edition
STA. 112+46.01
REF. POST. ---
HWY. NO. ---
COUNTY SARPY

DESIGNED BY: R. Paradis
DETAILED BY: T. Sas
Q.C. ENGINEER: M. Wagner-Loos
DATE MARCH 2026

SPECIAL PLAN NO. 2
28/32

Computer: 2MQ5130W92
Date: 13-FEB-2026 11:24
File: NDOT_2D_SP2.dgn

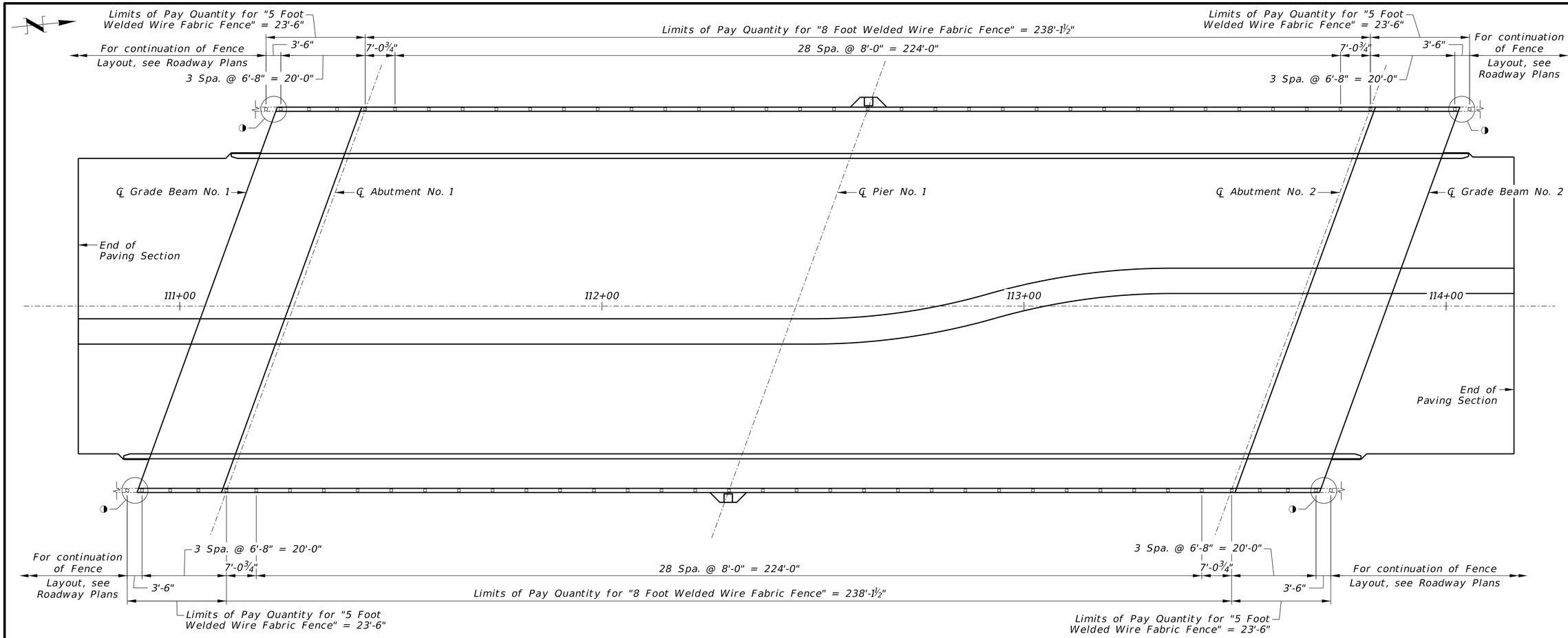

FENCE LAYOUT

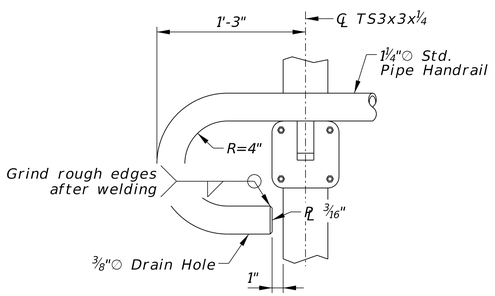

SECTION D

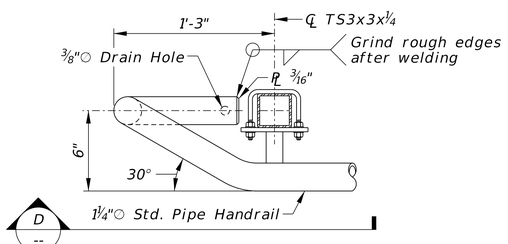

END OF HANDRAIL DETAIL - PLAN
(See Roadway Plans for location)

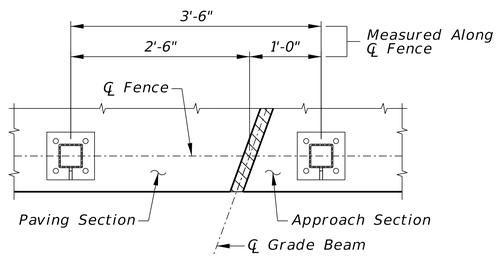

POST LAYOUT DETAIL AT GRADE BEAM

NOTE:

◑ *Fence expansion joint, see Post Layout Detail at Grade Beam for fence post spacing near expansion joints.*

WELDED WIRE FABRIC FENCE QUANTITY SUMMARY	
PAY ITEM	*QUANTITY*
8 Foot Welded Wire Fabric Fence	*476'-3"*
5 Foot Welded Wire Fabric Fence	*94'-0"*

PRELIMINARY PLAN
NOT FINAL - SUBJECT TO CHANGE

HDR Engineering Inc.
1917 South 67th Street
Omaha, NE 68106
Office: 402-399-1000
Nebraska C.O.A. CA-0443

S60

PROJECT NUMBER
C-77 (25-15)

C.N.

LOCATION
SOUTH SARPY EXPRESSWAY

STRUCTURE NUMBER

WELDED WIRE FABRIC FENCE DETAILS (1 OF 2)
238'-0" 2-SPAN PRESTRESSED CONCRETE GIRDER BRIDGE (NU1600)

Q.C. ENGINEER: *M. Wagner-Loos* DATE *MARCH 2026*
DETAILED BY: *T. Sas*
DESIGNED BY: *R. Paradis*

SKEW *20°* ROADWAY *Varies* WB/Varies EB
FHWA CONST. TYPE *X281* DESIGN LIVE LOAD *HL-93*
DESIGN CODE *LRFD 9th Edition*
STA. *112+46.01* REF. POST. *---* HWY. NO. *---* COUNTY *SARPY*

SPECIAL PLAN NO. *2*

Computer: 2MQ5130W92
Date: 13-FEB-2026 11:24
File: NDOT_2D_SP2.dgn

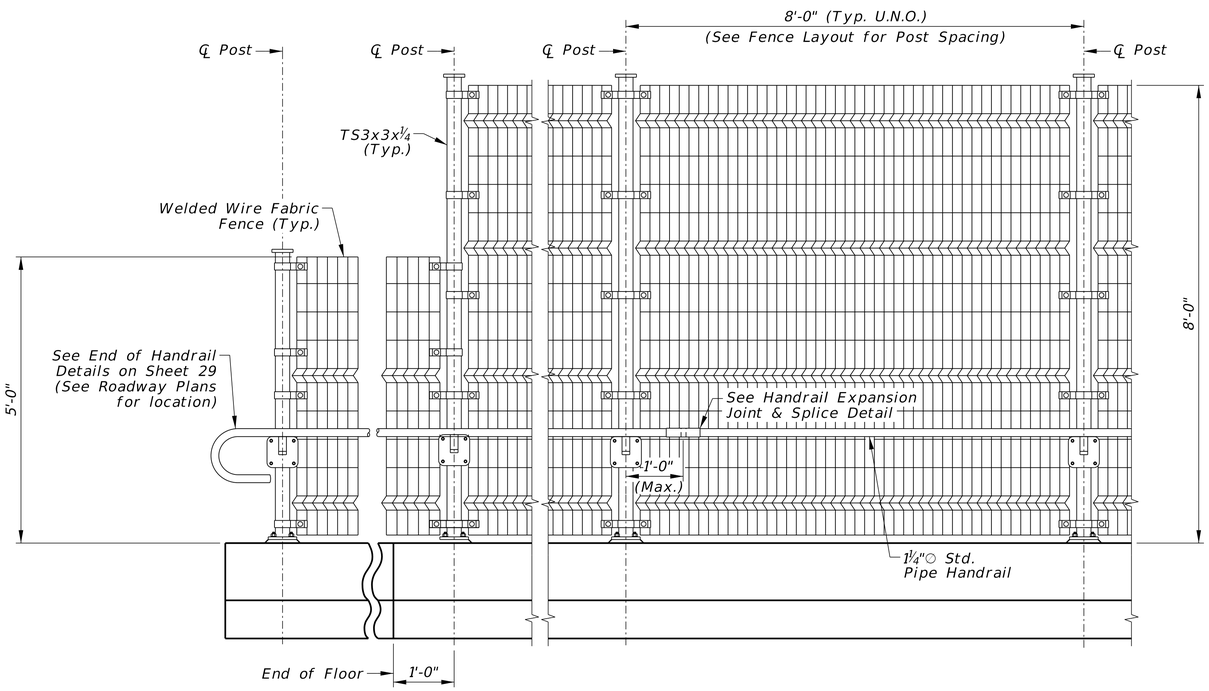

PARTIAL ELEVATION OF WELDED WIRE FABRIC FENCE

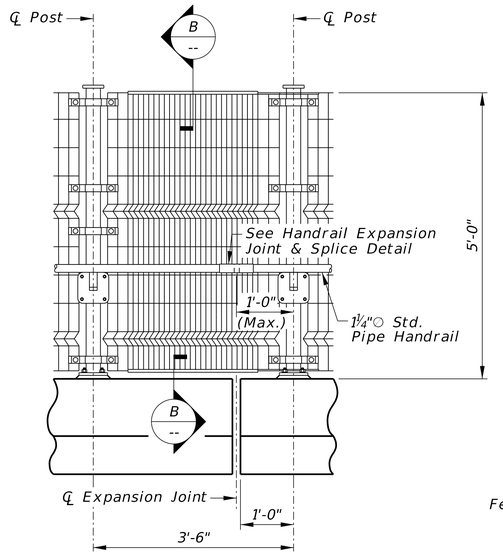

FENCE EXPANSION JOINT DETAIL

NOTE:
All panels shall be welded at intersections, then galvanized, and finished with polyester powder coating.

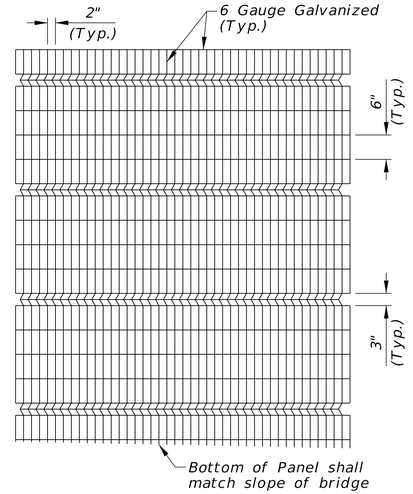

STANDARD 8' FENCE PANEL

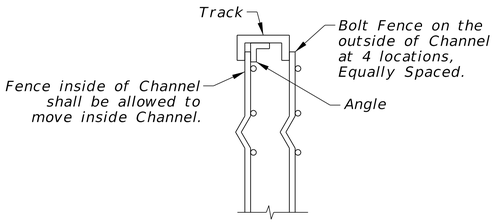

SECTION B

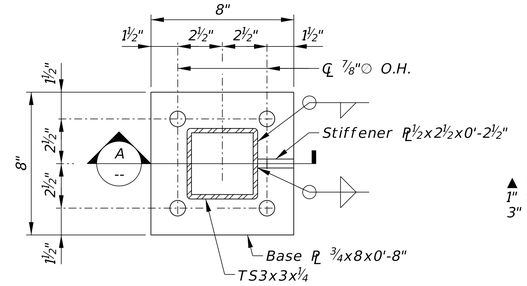

BASE PLATE PLAN VIEW

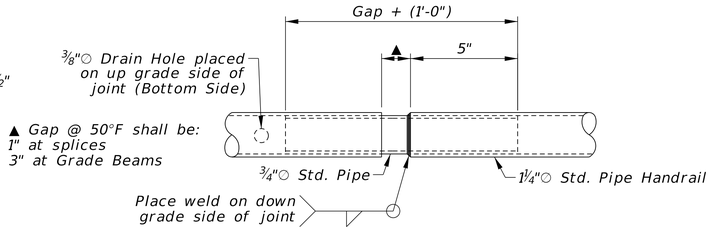

HANDRAIL EXPANSION JOINT & SPLICE DETAIL
(Plan View)

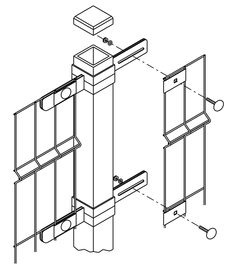

BRACKET CONNECTION DETAIL
Not to Scale

FENCE NOTES:

Fence and handrail layout shall conform to vertical alignment of the bridge. Fence posts shall be set plumb. All nuts for standard fence panel bracket connections shall be placed on the outside of the fence. Peen all bolts.

Fence must be designed and detailed to accommodate bridge expansion.

Fence panels, posts and hardware will be polyester powder coated after galvanizing and conform to the requirements of Section 1064 of the Standard Specifications. The coating shall be black and industrial grade. The height of the fabric shall be 8'-0" & 5'-0".

All anchor bolts and hardware shall be galvanized per ASTM A153.

All pipe sections shall be ASTM A53, Type E or S, Grade B, galvanized in accordance w/ ASTM A123 and coated with a polyester powder coat as noted above.

All structural tubing shall be ASTM A500, Grade B, galvanized in accordance w/ ASTM A123 and coated with a polyester powder coat as noted above.

Handrails shall have a min. length of 20'-0" between splices and splices shall be placed 12" maximum from ℄ Posts.

Alternate fence post layout and anchorage details may be used with Engineer's approval.

All equipment, labor and miscellaneous items including anchorage hardware required to install fence shall be included in the pay item "8 FOOT WELDED WIRE FABRIC FENCE" or "5 FOOT WELDED WIRE FABRIC FENCE".

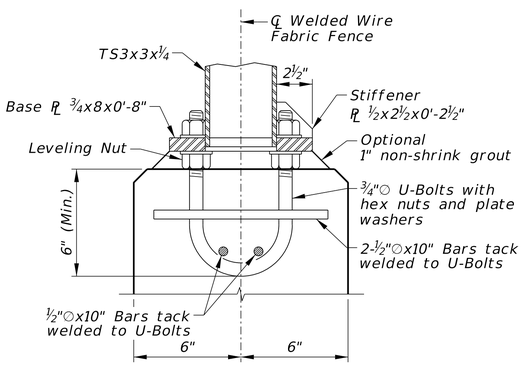

SECTION A

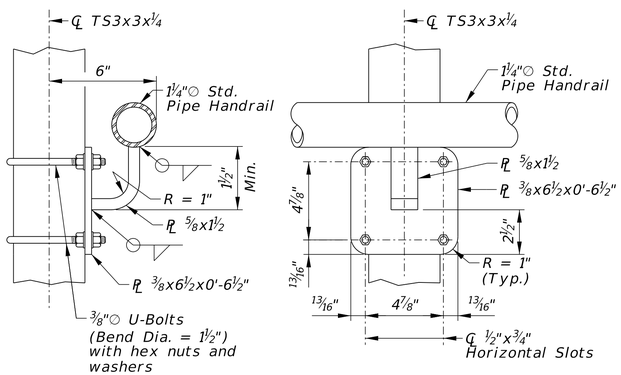

HANDRAIL BRACKET DETAILS

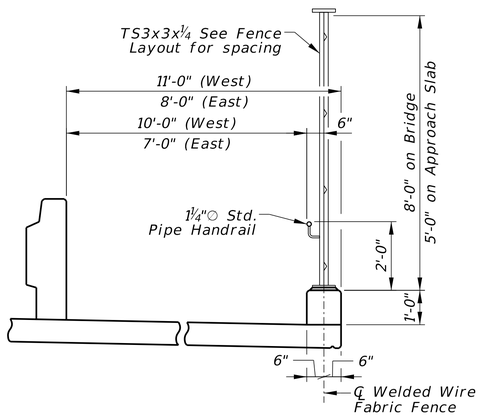

TYPICAL SECTION THRU FENCE

PRELIMINARY PLAN
NOT FINAL - SUBJECT TO CHANGE

HDR Engineering Inc.
1917 South 67th Street
Omaha, NE 68106
Office: 402-399-1000
Nebraska C.O.A. CA-0443

S61

PROJECT NUMBER
C-77 (25-15)

C.N.

LOCATION
SOUTH SARPY EXPRESSWAY

STRUCTURE NUMBER

238'-0" 2-SPAN PRESTRESSED CONCRETE GIRDER BRIDGE (NU1600)
WELDED WIRE FABRIC FENCE DETAILS (2 OF 2)

Q.C. ENGINEER: M. Wagner-Loos DATE MARCH 2026

COUNTY	SARPY	SKEW	20° RHB
HWY. NO.	---	ROADWAY	Varies WB/Varies EB
REF. POST.	---	FHWA CONST. TYPE	X281
STA.	112+46.01	DESIGN LIVE LOAD	HL-93
DESIGN CODE	LRFD 9th Edition		

DESIGNED BY: R. Paradis DETAILED BY: T. Sas

SPECIAL PLAN NO. 2

30/32

Computer: 2MQ5130W92
Date: 13-FEB-2026 11:24
File: NDOT_2D_SP2.dgn

BILL OF BARS — SLAB

MARK	NUMBER OF BARS	LENGTH	TYPE	A	B	C	D	E	F	PIN Ø	HOOK	WEIGHT (LB)
S701	180	60'-0"	STR.									22075
S601	185	60'-0"	STR.									16672
S602	474	9'-3"	STR.									6586
S603	474	6'-6"	STR.									4628
S604	188	3'-4"	105	1'-8"	1'-8"	1'-2"				4½"		941
S605	7	12'-6"	117	6'-10"	2'-10"	6'-5"	2'-10"			4½"		131
S606	2	8'-0"	101	5'-2"	2'-10"	11½"				4½"		24
S501	448	42'-2"	STR.									19703
S502	441	51'-8"	STR.									23765
S503	370	95'-10"	STR.	Includes 1 - 3'-0" lap								36983
S504	14	23'-8" Avg.	STR.									346
S505	15	21'-6" Avg.	STR.									336
S506	19	27'-0" Avg.	STR.									535
S507	18	27'-9" Avg.	STR.									521
S508	14	22'-4" Avg.	STR.									326
S509	15	22'-10" Avg.	STR.									357
S510	18	27'-0" Avg.	STR.									507
S511	17	27'-8" Avg.	STR.									491
S512	176	6'-2"	104	3'-1"	3'-1"					3¾"		1132
S513	88	14'-1"	107	3'-9"	2'-10"					2½"	5½"	1293
S514	56	12'-0"	103	4'-7"	2'-10"	4'-7"				2½"		701
S515	80	10'-4"	STR.									862
S516	24	6'-0"	STR.									150
S517	16	7'-6"	STR.									125
S518	376	6'-2"	104	3'-1"	3'-1"					3¾"		2418
S519	188	12'-9"	107	2'-11"	3'-0"					2½"	5½"	2500
S520	116	12'-6"	103	4'-9"	3'-0"	4'-9"				2½"		1512
S521	80	10'-4"	STR.									862
S522	16	96'-3"	STR.	Includes 1 - 3'-1" lap								1606
S523	48	6'-0"	STR.									300
S524	16	7'-6"	STR.									125
S525	16	1'-10"	STR.									31
S526	4	9'-8"	133	4'-0"	1'-8"	4'-0"	7"			2½"		40
S527	8	6'-9"	102	1'-8"	8"	3'-9"	8"	6"		2½"		56
S530	4	44'-11"	STR.									187
S531	4	55'-0"	STR.									229
S401	7	253'-0"	STR.	Includes 4 - 1'-11" laps								1183
S402	330	2'-9"	104	2'-0"	9"					3"		606
S403	165	4'-3"	STR.									468
S470	8	247'-4"	STR.	Includes 4 - 1-11" laps								1322
S471	482	4'-11"	107	1'-5"	8"					2"	4½"	1583
											TOTAL (LB) =	154218

SLAB

BILL OF BARS — LPF

MARK	NUMBER OF BARS	LENGTH	TYPE	A	B	C	D	E	F	PIN Ø	HOOK	WEIGHT (LB)
S571	48	4'-0"	STR.									200
S572	4	13'-7"	134	3'-4"	3'-11"	2'-4"	2'-4"	3'-4"	1'-6"	2½"		57
S573	8	5'-10"	107	11½"	1'-6"					2½"	5½"	49
S574	8	6'-1"	107	1'-1"	1'-6"					2½"	5½"	51
											TOTAL (LB) =	357

BILL OF BARS — CONCRETE RAIL ON BRIDGE

MARK	NUMBER OF BARS	LENGTH	TYPE	A	B	C	D	E	F	PIN Ø	HOOK	WEIGHT (LB)
S691	20	249'-10"	STR.	Includes 4 - 2'-6" Laps								7505
S591	1444	6'-4"	104	3'-2"	3'-2"					3¾"		9539
S490	722	4'-4"	131	2'-0"	4"	2'-0"	3"			2"		2090
S491	1444	4'-7"	107	1'-1"	10"					2"	4½"	4421
S492	12	249'-10"	STR.	Includes 4 - 2'-6" Laps								2003
											TOTAL (LB) =	25558

BILL OF BARS — CONCRETE RAIL ON APPROACH

MARK	NUMBER OF BARS	LENGTH	TYPE	A	B	C	D	E	F	PIN Ø	HOOK	WEIGHT (LB)
N691	32	17'-0"	STR.									817
N692	176	6'-10"	104	3'-5"	3'-5"					4½"		1806
N694	8	19'-7"	STR.									235
N695	8	6'-1"	STR.									73
N590	24	14'-5"	130	4'-8"	10"	6'-1"	5"	1'-6"	1'-5"	2½"	5½"	361
N591	48	11'-11"	107	4'-8"	10"					2½"	5½"	597
N592	184	6'-10"	104	3'-5"	3'-5"					3¾"		1311
N490	172	4'-4"	131	2'-0"	4"	2'-0"	3"			2"		498
N491	184	4'-7"	107	1'-1"	10"					2"	4½"	563
N492	24	16'-4"	STR.									262
											TOTAL (LB) =	6523

BILL OF BARS — TWO APPROACH SLABS

MARK	NUMBER OF BARS	LENGTH	TYPE	A	B	C	D	E	F	PIN Ø	HOOK	WEIGHT (LB)
N801	438	19'-4"	STR.									22610
N601	286	29'-4 Avg.	STR.									12601
N501	100	99'-9"	STR.	Includes 1 - 3'-1" lap								10404
N502	184	19'-4"	STR.									3710
N503	144	29'-4" Avg.	STR.									4406
N504	68	73'-11"	STR.	Includes 1 - 3'-1" lap								5242
N505	16	68'-2" Avg.	STR.	Includes 1 - 3'-1" lap								1138
N506	84	30'-8" Avg.	STR.									2687
N507	4	79'-11"	STR.	Includes 1 - 3'-1" lap								333
N510	100	2'-2"	104	1'-1"	1'-1"					2½"		226
N511	2	19'-3"	STR.									40
N512	2	11'-9"	STR.									25
N401	56	8'-7"	103	4'-0"	7"	4'-0"				2"		321
N402	8	6'-2"	STR.									33
N470	16	19'-6"	STR.									208
N471	84	5'-3"	107	1'-7"	8"					2"	4½"	295
N481	14	27'-2" Avg.	STR.									254
N482	14	19'-4"	STR.									181
N483	136	2'-9"	104	9"	2'-0"					2"		250
N484	64	4'-3"	STR.									182
N485	2	4'-4"	STR.									6
N486	2	4'-3"	STR.									6
											TOTAL (LB) =	65158

TWO APPROACH SLABS

BAR SETS - SLAB

MARK	MAX. LENGTH	MIN. LENGTH	NO. OF SETS	BARS PER SET
S504	41'-7"	5'-10"	1	14
S505	40'-9"	2'-3"	1	15
S506	51'-8"	2'-3"	1	19
S507	51'-1"	4'-4"	1	18
S508	40'-2"	4'-6"	1	14
S509	42'-1"	3'-7"	1	15
S510	50'-4"	3'-7"	1	18
S511	49'-6"	5'-9"	1	17

BAR SETS - TWO APPROACH SLABS

MARK	MAX. LENGTH	MIN. LENGTH	NO. OF SETS	BARS PER SET
N601	42'-2"	16'-6"	2	143
N503	42'-2"	16'-6"	2	72
N505	72'-3"	64'-1"	4	4
N506	58'-2"	3'-2"	4	21
N481	28'-2"	27'-2"	2	7

NOTE:

For pin dimensions, hook lengths and bending diagragms, see Sheet 32.

PRELIMINARY PLAN
NOT FINAL - SUBJECT TO CHANGE

HDR Engineering Inc.
1917 South 67th Street
Omaha, NE 68106
Office: 402-399-1000
Nebraska C.O.A. CA-0443

S62

PROJECT NUMBER
C-77 (25-15)

C.N.

LOCATION
SOUTH SARPY EXPRESSWAY

STRUCTURE NUMBER

BILL OF BARS
238'-0" 2-SPAN PRESTRESSED CONCRETE GIRDER BRIDGE (NU1600)

Q.C. ENGINEER: M. Wagner-Loos DATE MARCH 2026
DESIGNED BY: K. Devkota DETAILED BY: T. Sas

COUNTY SARPY
HWY. NO. ---
REF. POST. ---
STA. 112+46.01
DESIGN CODE LRFD 9th Edition
SKEW 20° RHB
ROADWAY Varies WB/Varies EB
FHWA CONST. TYPE X281
DESIGN LIVE LOAD HL-93

SPECIAL PLAN NO. 2

31/32

Computer: 2MQ5130W92
Date: 13-FEB-2026 11:24
File: NDOT_2D_SP2.dgn

Computer: 2MQ5130W92
Date: 13-FEB-2026 11:24
File: NDOT_2D_SP2.dgn

BENDING DIAGRAMS

ALL DIMENSIONS ARE OUT TO OUT & NOT TO SCALE

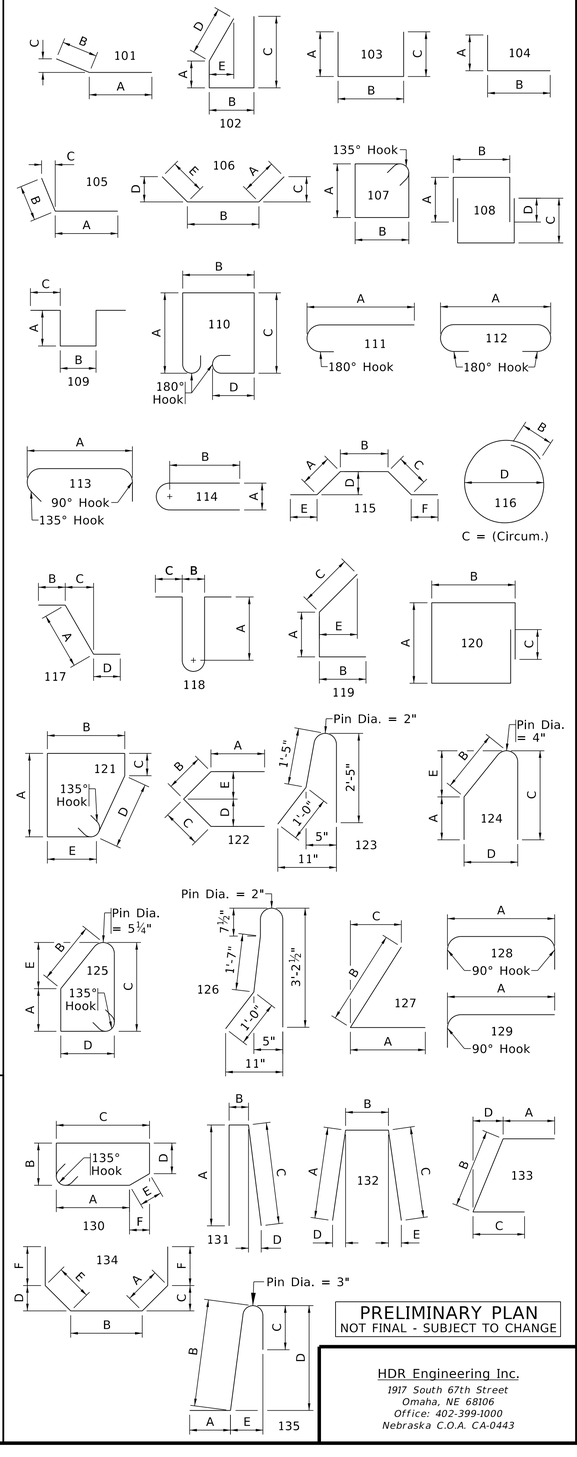

BAR MARK

A413 A 4 13

- 13 — BAR NUMBER: 01 - 99
- 4 — BAR SIZE
- A — TYPE OF BRIDGE ELEMENT: (D = Drilled Shaft, A = Abutment, B = Bent, P = Pier, S = Slab & N = Approach Slab)

THE NUMBER OF LAP SPLICES ARE CALCULATED BASED ON 60'-0" LENGTHS OF REINFORCING STEEL BARS.
SPLICES ON BARS SHORTER THAN 60'-0" WILL REQUIRE ADDITIONAL LAP SPLICES AT NO ADDITIONAL EXPENSE TO NDOT.

STANDARD HOOK LENGTH						PIN DIAMETER			
PRIMARY STRESS			STIRRUPS & TIES			PRIMARY STRESS		STIRRUPS & TIES	
BAR SIZE	HOOK		BAR SIZE	HOOK		BAR SIZE	Dp	BAR SIZE	Dp
	90°	180°		90°	135°				
			3	4"	4"			3	1½"
4	8"	6"	4	4½"	4½"	4	3"	4	2"
5	10"	7"	5	6"	5½"	5	3¾"	5	2½"
6	12"	8"	6	12"	8"	6	4½"	6	4½"
7	15"	10"	7	14"	9"	7	5¼"	7	5¼"
8	17"	11"	8	16"	10½"	8	6"	8	6"
9	19"	15"	d = Bar Size Dp = Pin Diameter			9	9½"		
10	23"	17"				10	10¾"		
11	24"	19"				11	12"		
14	31"	27"				14	18¼"		

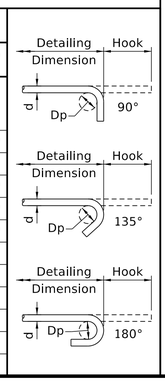

S63

PROJECT NUMBER
C-77 (25-15)

C.N.

LOCATION
SOUTH SARPY EXPRESSWAY

STRUCTURE NUMBER

238'-0" 2-SPAN PRESTRESSED CONCRETE GIRDER BRIDGE (NU1600)

BENDING DIAGRAMS

SKEW 20° RHB
ROADWAY Varies WB/Varies EB
FHWA CONST. TYPE X281
DESIGN LIVE LOAD HL-93
DESIGN CODE LRFD 9th Edition

COUNTY SARPY
HWY. NO. ---
REF. POST. ---
STA. 112+46.01

DESIGNED BY: R. Paradis
DETAILED BY: T. Sas
Q.C. ENGINEER: K. Devkota
DATE MARCH 2026

PRELIMINARY PLAN
NOT FINAL - SUBJECT TO CHANGE

HDR Engineering Inc.
1917 South 67th Street
Omaha, NE 68106
Office: 402-399-1000
Nebraska C.O.A. CA-0443

SPECIAL PLAN NO. 2

32 / 32

- SOUTH SARPY EXPRESSWAY -

- NOTES -

GENERAL
This structure is designed in accordance with the AASHTO LRFD Bridge Design Specifications, 10th Edition, including subsequent interim revisions.

All dimensions shown are in horizontal plane only. No allowances have been made for vertical curve or roadway cross slope.

Unless noted “NOT TO SCALE”, all details are drawn using a constant scale in accordance with NDOT Bridge Scaling Policy.

SUBSTRUCTURE
Structural steel for all "H" piles shall conform to ASTM A709, Grade 50.

CONCRETE & REINFORCEMENT
Concrete for precast slab beams shall be Class “47BD”, with a 28-day strength of 5,000 psi.

All other cast-in-place concrete shall be Class “47B” concrete, with a 28-day strength of 3,000 psi.

Chamfer all exposed edges of concrete.

Unless noted as “Optional”, all construction joints shown are mandatory.

All reinforcing steel shall conform to the requirements of ASTM A615, Grade 60 steel.

The minimum clearance, measured from the face of the concrete to the surface of any reinforcing bar, shall be 2”, except where otherwise noted.

Field bend and/or clip reinforcing bars to maintain minimum clearance.

MISCELLANEOUS
All materials, equipment, tools, labor, and incidentals necessary to complete the work, not paid for directly, shall be considered subsidiary to other items for which payment is made.

- QUANTITIES -

CLASS 47B-3000 CONCRETE FOR GRADE BEAMS	100	CY
PRECAST SLAB BEAMS	13	EA
REINFORCING STEEL FOR GRADE BEAMS	14'500	LB
HP 12 INCH X 53 LB STEEL PILING	4,860	LF
PREFORMED EXPANSION JOINT	1	LS
FLOWABLE FILL	75	CY
ELASTOMERIC BEARING PAD ¾" x 10"	310	LF
VOID FORM 4"x22'-0" x 155'-0"	1	LS

- INDEX -

GENERAL NOTES, QUANTITIES & INDEX	1
GENERAL SITE PLAN	2
PILE LAYOUT	3
BRIDGE ELEVATION AND SECTIONS	4
CAST-IN-PLACE GRADE BEAM DETAILS	5
PRECAST SLAB BEAM DETAILS	6
CATHODIC PROTECTION DESIGN (SHEET 1 OF 2)	7
CATHODIC PROTECTION DESIGN (SHEET 2 OF 2)	8
BILL OF BARS AND BENDING DIAGRAMS	9

SHOP PLANS FOR REVIEW:
PRESTRESSED CONCRETE SUPERSTRUCTURE

PRELIMINARY PLAN
NOT FINAL - SUBJECT TO CHANGE

HDR Engineering Inc.
1917 South 67th Street
Omaha, NE 68106
Office: 402-399-1000
Nebraska C.O.A. CA-0443

S64

PROJECT NUMBER
xx-x(xxxx)

C.N.

LOCATION
SOUTH SARPY EXPRESSWAY

STRUCTURE NUMBER
—

26'-4" 1-SPAN PRECAST CONCRETE SLAB BRIDGE OVER EXISTING MUD 60" WATER MAIN UTILITY

GENERAL NOTES, QUANTITIES & INDEX

Q.C. ENGINEER: A. MCCUNE DATE FEBRUARY 2026
DETAILED BY: M. MCKIBBIN
DESIGNED BY: D. WISNIESKI

COUNTY SARPY SKEW --°
HWY. NO. -- ROADWAY --
REF. POST. -- FHWA CONST. TYPE --
STA. 11558+09.47 DESIGN LIVE LOAD --
DESIGN CODE LRFD 10th Edition

SPECIAL PLAN NO. 3

1/9

File: NDOT_2D_SP3.dgn Date: 13-FEB-2026 14:55 Computer: 2MQ0520J0P

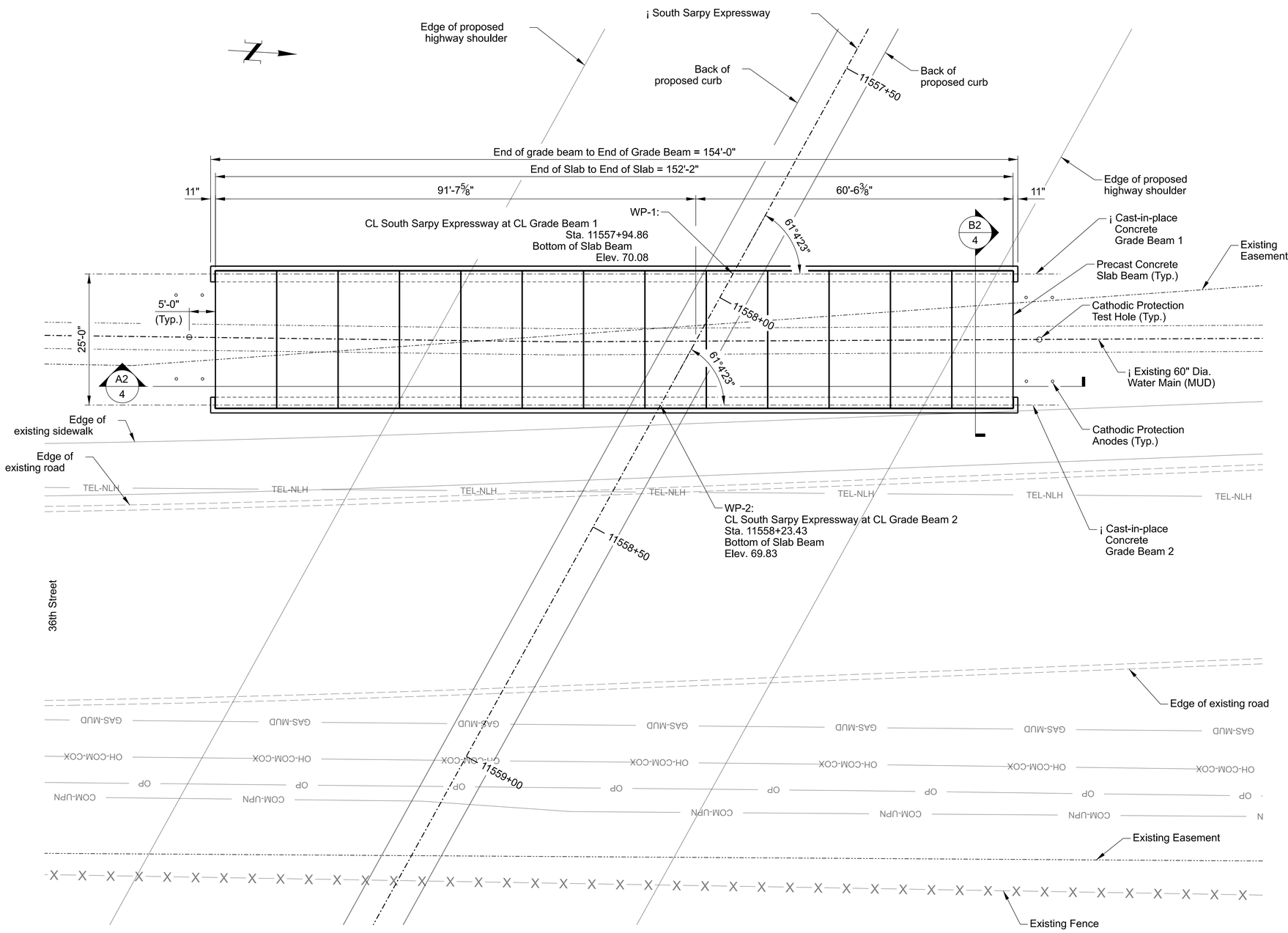

GENERAL SITE PLAN
Scale: 1" = 10'-0"

NOTES:
See Civil/Roadway plans for complete Highway Alignment and Profile information.

See project specifications and special provisions for material requirements.

See Civil/Roadway plans for pavement sections over the bridge. (Pavement to be constructed by others)

PRELIMINARY PLAN
NOT FINAL - SUBJECT TO CHANGE

HDR Engineering Inc.
1917 South 67th Street
Omaha, NE 68106
Office: 402-399-1000
Nebraska C.O.A. CA-0443

S65

PROJECT NUMBER
xx-x(xxxx)

C.N.

LOCATION
SOUTH SARPY EXPRESSWAY

STRUCTURE NUMBER
—

26'-4" 1-SPAN PRECAST CONCRETE SLAB BRIDGE OVER EXISTING MUD 60" WATER MAIN UTILITY

GENERAL SITE PLAN

DATE FEBRUARY 2026
Q.C. ENGINEER: A. MCCUNE
DETAILED BY: M. MCKIBBIN
DESIGNED BY: D. WISNIESKI

COUNTY SARPY
HWY. NO. --
REF. POST. --
STA. 11558+09.47
DESIGN CODE LRFD 10th Edition

SKEW --°
ROADWAY --
FHWA CONST. TYPE --
DESIGN LIVE LOAD --

SPECIAL PLAN NO. 3

2 / 9

Computer: 2MQS020J0P
Date: 13-FEB-2026 14:55
File: NDOT_2D_SP3.dgn

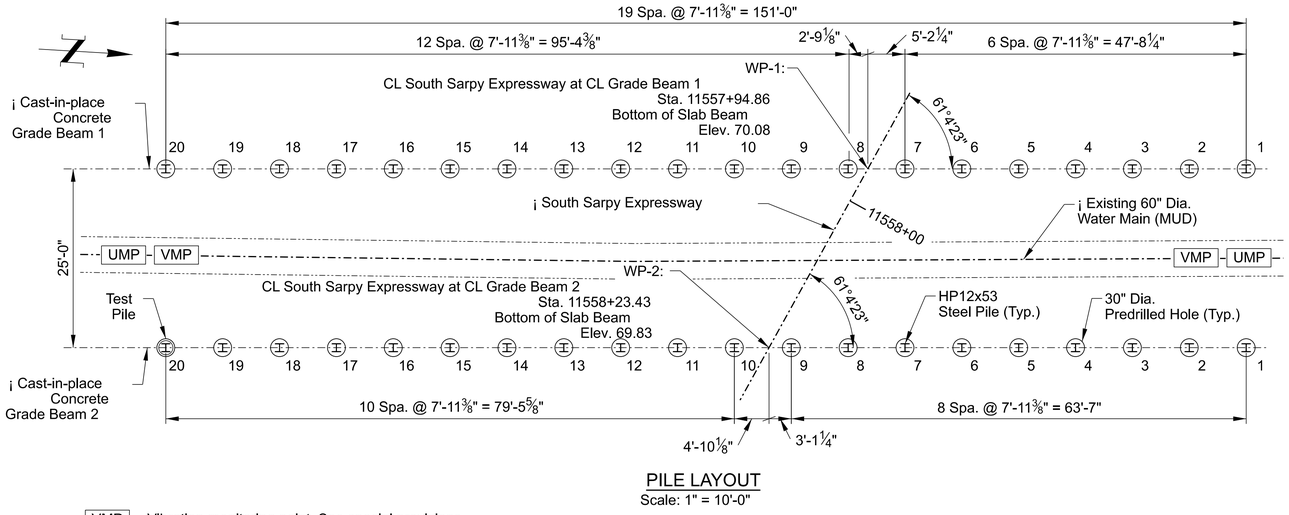

PILE LAYOUT
Scale: 1" = 10'-0"

VMP Vibration monitoring point. See special provisions for monitoring requirements.

UMP Utility monitoring point. See special provisions for monitoring requirements.

NOTES:
All pile spacing is given at the bottom of Grade Beam.

Prefabricated cast steel points will be required on all HP piles in this structure. They shall conform to the requirements of ASTM A27 Grade 70-36 or ASTM A148 Grade 90-60 and be listed on the NDOT Approved Products List.

Paragraphs 1.a & 1.b of Subsection 703.03 of the Standard Specifications shall be revised to require the Contractor to perform the wave equation analysis and shall submit the results of the analysis including the Hammer Data sheet to the Engineer for review and approval. The analysis shall be sealed by a professional engineer licensed in the state of Nebraska.

Test piles shall be driven, as shown in the TEST PILE DATA table.

Pile order lengths, except for those shown for the test piles, are tentative. The final order lengths shall be based on the results obtained from the test pile driving.

The driving of the test pile will be monitored with a Pile Driving Analyzer. The use of the Pile Driving Analyzer will require the Contractor to set up the hammer for driving. The Contractor shall bolt two accelerometers and two strain transducers to the pile before driving is started.

The holes or anchors for the accelerometers and strain transducers will have been predrilled by Third-Party Testing Agency personnel while the pile is still on the ground. The Contractor may be required to stop the hammer for wave speed determination after the first few blows.

The Contractor shall drive the pile until the transducers are near the surface of the ground, or as directed by the Engineer, at which time the Contractor shall stop the hammer for the removal of the accelerometers and strain transducers. The Contractor shall then continue driving the pile to cut-off or as directed by the Engineer.

The time delay in driving each pile being monitored by the Pile Driving Analyzer will normally range from 30 to 60 minutes.

The Contractor shall provide access to the pile driving area for the Third-Party Testing Agency equipment vehicle (light truck). The work performed by the Contractor, in conjunction with the use of the Pile Driving Analyzer, as described herein, shall not be paid for directly, but shall be considered subsidiary to items for which direct payment is made.

Final order lengths will be provided by the Engineer to the Contractor within three working days after the test pile.

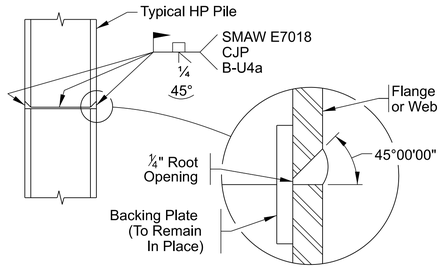

NOTE:
See "FIELD WELDING GUIDE" for Steel Pile Splice welding requirements and procedure. The Guide is located under "PROJECT MANAGER RESOURCES" on the NDOT Website.

STANDARD PILE SPLICE

TEST PILE DATA

LOCATION	PILE NUMBER	CUT-OFF ELEVATION	PILE ORDER LENGTH (feet)	DESIGN PILE BEARING (kips/pile)
Grade Beam 2	20	66.78	130	280

PILE DATA

LOCATION & PILE TYPE	PILE NUMBER	CUT-OFF ELEVATION	MINIMUM PENETRATION BELOW CUT-OFF (feet)	TENTATIVE PILE ORDER LENGTH (feet)	PILE ORDER LENGTH (feet)	DESIGN PILE BEARING (kips/pile)	LOCATION & PILE TYPE	PILE NUMBER	CUT-OFF ELEVATION	MINIMUM PENETRATION BELOW CUT-OFF (feet)	TENTATIVE PILE ORDER LENGTH (feet)	PILE ORDER LENGTH (feet)	DESIGN PILE BEARING (kips/pile)
Grade Beam No. 1 HP12x53	1	69.44	TBD	120	TBD	280 kip	Grade Beam No. 2 HP12x53	1	69.44	TBD	120	TBD	280 kip
	2	69.31						2	69.30				
	3	69.17						3	69.16				
	4	69.03						4	69.01				
	5	68.89						5	68.87				
	6	68.75						6	68.73				
	7	68.61						7	68.59				
	8	68.47						8	68.45				
	9	68.33						9	68.32				
	10	68.19						10	68.18				
	11	68.05						11	68.04				
	12	67.91						12	67.90				
	13	67.77						13	67.76				
	14	67.63						14	67.62				
	15	67.49						15	67.48				
	16	67.35						16	67.34				
	17	67.21						17	67.20				
	18	67.07						18	67.06				
	19	66.93						19	66.92				
	20	66.79						20	66.78				

PRELIMINARY PLAN
NOT FINAL - SUBJECT TO CHANGE

HDR Engineering Inc.
1917 South 67th Street
Omaha, NE 68106
Office: 402-399-1000
Nebraska C.O.A. CA-0443

S66

PROJECT NUMBER
xx-x(xxxx)

C.N.

LOCATION
SOUTH SARPY EXPRESSWAY

STRUCTURE NUMBER
—

26'-4" 1-SPAN PRECAST CONCRETE SLAB BRIDGE
OVER EXISTING MUD 60" WATER MAIN UTILITY

PILE LAYOUT

COUNTY SARPY
HWY. NO. --
REF. POST. --
STA. 11558+09.47
DESIGN CODE LRFD 10th Edition

SKEW --°
ROADWAY --
FHWA CONST. TYPE --
DESIGN LIVE LOAD --

DESIGNED BY: D. WISNIESKI
DETAILED BY: M. MCKIBBIN
Q.C. ENGINEER: A. MCCUNE
DATE FEBRUARY 2026

SPECIAL PLAN NO. 3 / 9

Computer: 2MQ5020J0P
Date: 13-FEB-2026 14:55
File: NDOT_2D_SP3.dgn

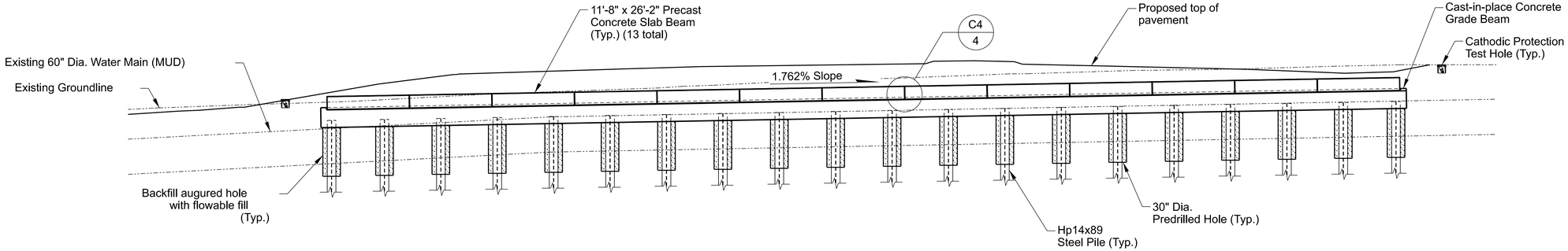

SECTION A2

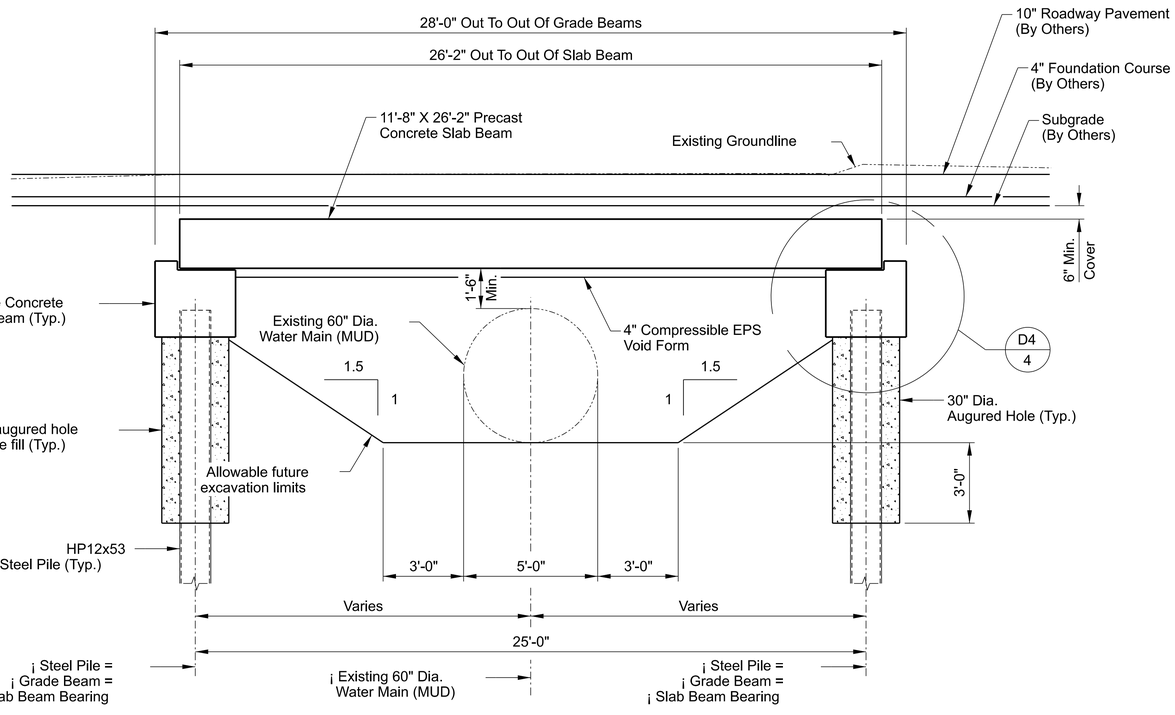

SLAB BRIDGE ELEVATION/SECTION B2

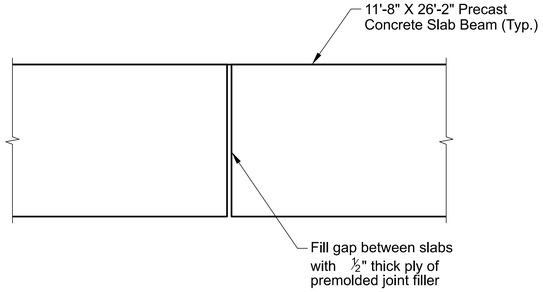

DETAIL C4
Not to Scale

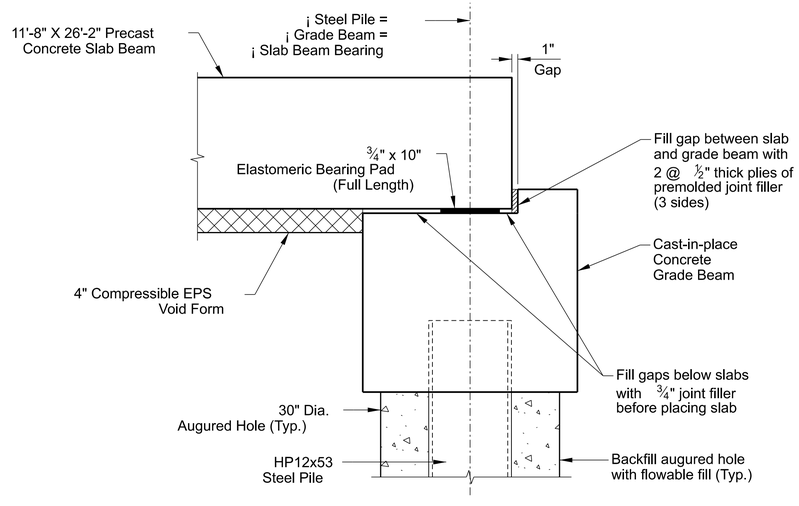

DETAIL D4

NOTE:
FASTEN THE BEARING PADS TO CAP BY USING THE FOLLOWING PROCEDURE: CLEAR PADS ACCORDING TO MANUFACTURER'S RECOMMENDATIONS; PRIME CONTACT SURFACE AND GLUE TO CAP WITH SIKADUR 31 HI-MOD GEL (1:1 MIX RATIO) OR APPROVED EQUAL.

PRELIMINARY PLAN
NOT FINAL - SUBJECT TO CHANGE

HDR Engineering Inc.
1917 South 67th Street
Omaha, NE 68106
Office: 402-399-1000
Nebraska C.O.A. CA-0443

S67

PROJECT NUMBER
xx-x(xxxx)

C.N.

LOCATION
SOUTH SARPY EXPRESSWAY

STRUCTURE NUMBER
—

26'-4" 1-SPAN PRECAST CONCRETE SLAB BRIDGE OVER EXISTING MUD 60" WATER MAIN UTILITY

BRIDGE ELEVATION AND SECTIONS

DESIGNED BY: D. WISNIESKI DETAILED BY: M. MCKIBBIN
DESIGN CODE LRFD 10th Edition Q.C. ENGINEER: A. MCCUNE
STA. 11558+09.47 DESIGN LIVE LOAD -- DATE FEBRUARY 2026
REF. POST. -- FHWA CONST. TYPE --
HWY. NO. -- ROADWAY --
COUNTY SARPY SKEW --°

SPECIAL PLAN NO. 3

4 / 9

Computer: 2MQ5020J0P
Date: 13-FEB-2026 14:55
File: NDOT_2D_SP3.dgn

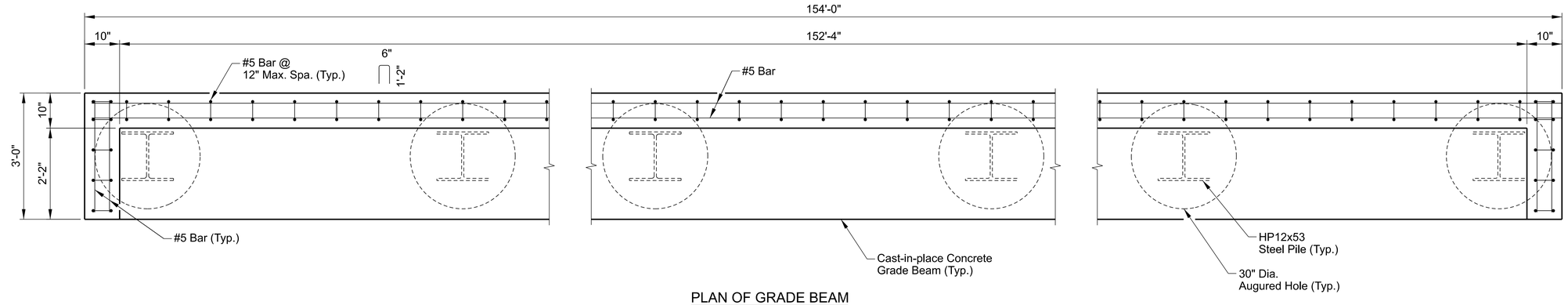

PLAN OF GRADE BEAM

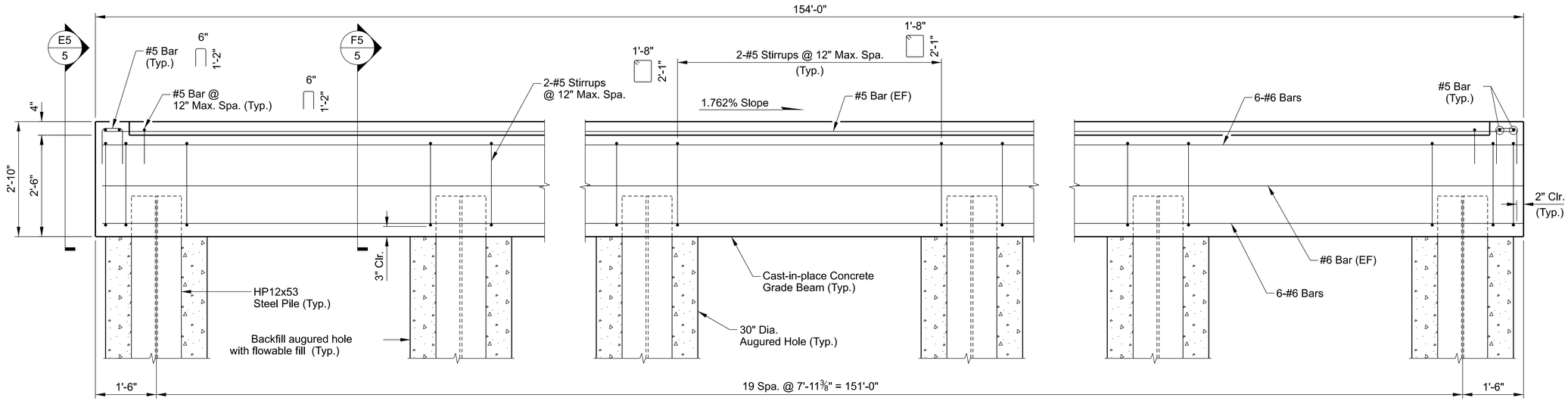

ELEVATION OF GRADE BEAM

Grade Beam 1 shown, slope Grade Beam 2 opposite direction.

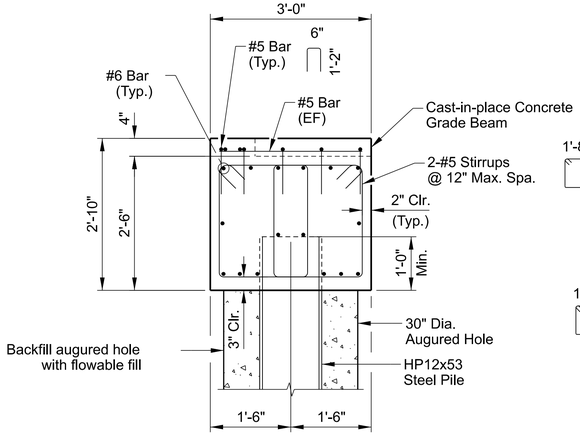

SECTION E5

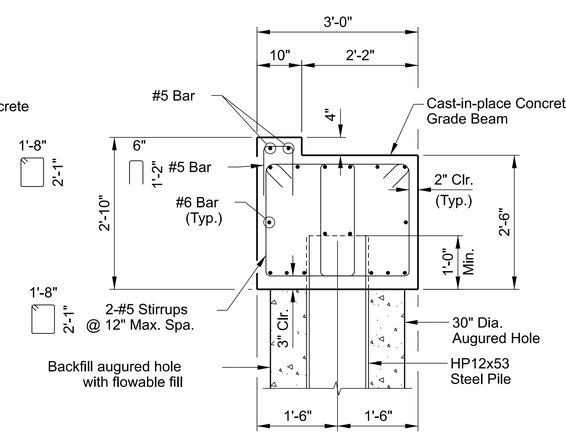

SECTION F5

NOTE:

Slope Cast-in-place Concrete Grade Beam as indicated.

PRELIMINARY PLAN
NOT FINAL - SUBJECT TO CHANGE

HDR Engineering Inc.
1917 South 67th Street
Omaha, NE 68106
Office: 402-399-1000
Nebraska C.O.A. CA-0443

S68

PROJECT NUMBER
xx-x(xxxx)

C.N.

LOCATION
SOUTH SARPY EXPRESSWAY

STRUCTURE NUMBER
—

26'-4" 1-SPAN PRECAST CONCRETE SLAB BRIDGE OVER EXISTING MUD 60" WATER MAIN UTILITY

CAST-IN-PLACE GRADE BEAM DETAILS

COUNTY SARPY
HWY. NO. --
REF. POST. --
STA. 11558+09.47
DESIGN CODE LRFD 10th Edition

SKEW --°
ROADWAY --
FHWA CONST. TYPE --
DESIGN LIVE LOAD --

Q.C. ENGINEER: A. MCCUNE
DATE FEBRUARY 2026

DESIGNED BY: D. WISNIESKI
DETAILED BY: M. MCKIBBIN

SPECIAL PLAN NO. 3

5/9

Computer: 2MO5020J0P
Date: 13-FEB-2026 14:55
File: NDOT_2D_SP3.dgn

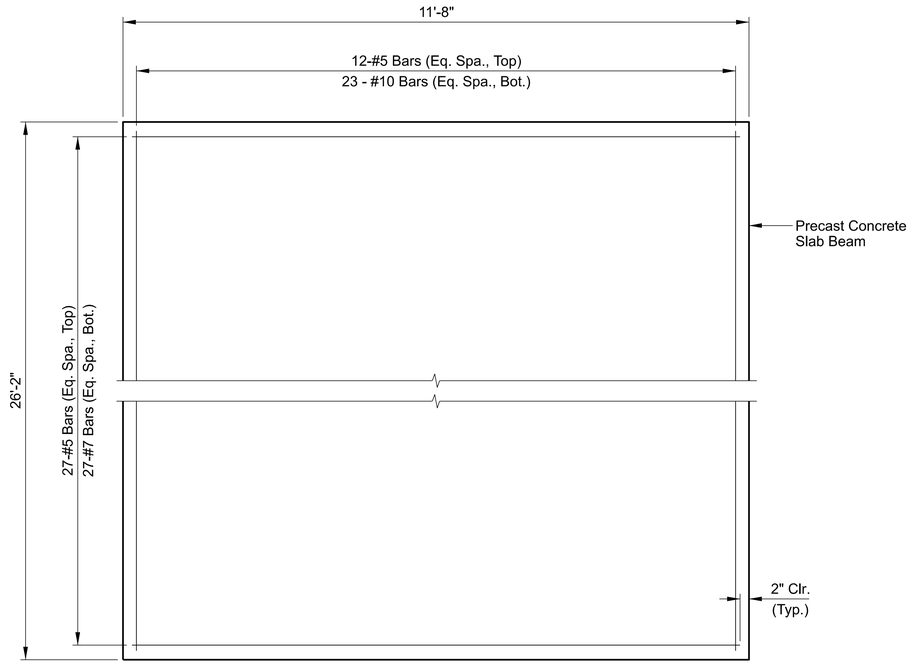

SLAB BEAM PLAN

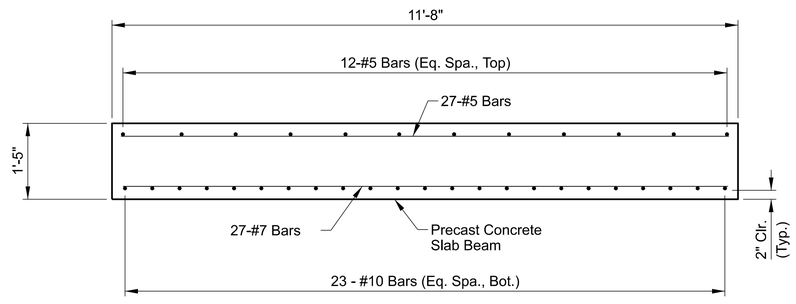

SLAB BEAM ELEVATION

NOTES:

Materials:
Precast Slab Beam f'c = 5.0 ksi
Reinforcing Steel fy = 60 ksi

Fabricator is responsible for number and location of lifting devices, and determination of final lifting weights for Slab Beams. Information shall be provided in shop drawings.

Fabricator is responsible for checking reinforcing in top of Precast Slab Beams if the proposed lifting and storage support locations are outside of the bearing locations in the final condition and revising reinforcing, if necessary, and must be approved by the Engineer.

Lifting devices shall be suitable for permanent use. Precast Slab Beams are expected to be able to be removed for future maintenance on the MUD Water Main.

Fabricator shall fully define the reinforcing utilized for each unique slab beam. Shop drawings shall be submitted for approval by the Engineer. Alternative reinforcement detailing may be permitted provided that the developed reinforcement spacing meets AASHTO LRFD minimum and maximum requirements. Any revisions to the reinforcement detailing must be approved by the Engineer.

Minimum concrete cover for reinforcement shall be 2" clear.

PRELIMINARY PLAN
NOT FINAL - SUBJECT TO CHANGE

HDR Engineering Inc.
1917 South 67th Street
Omaha, NE 68106
Office: 402-399-1000
Nebraska C.O.A. CA-0443

S69

PROJECT NUMBER
xx-x(xxxx)

C.N.

LOCATION
SOUTH SARPY EXPRESSWAY

STRUCTURE NUMBER
—

26'-4" 1-SPAN PRECAST CONCRETE SLAB BRIDGE OVER EXISTING MUD 60" WATER MAIN UTILITY

PRECAST SLAB BEAM DETAILS

DESIGNED BY: D. WISNIESKI | DETAILED BY: M. MCKIBBIN
Q.C. ENGINEER: A. MCCUNE | DATE FEBRUARY 2026

COUNTY SARPY | SKEW --°
HWY. NO. -- | ROADWAY --
REF. POST. -- | FHWA CONST. TYPE --
STA. 11558+09.47 | DESIGN LIVE LOAD --
DESIGN CODE LRFD 10th Edition

SPECIAL PLAN NO. 3

6
9

Computer: 2MQ5020J0P
Date: 13-FEB-2026 14:55
File: NDOT_2D_SP3.dgn

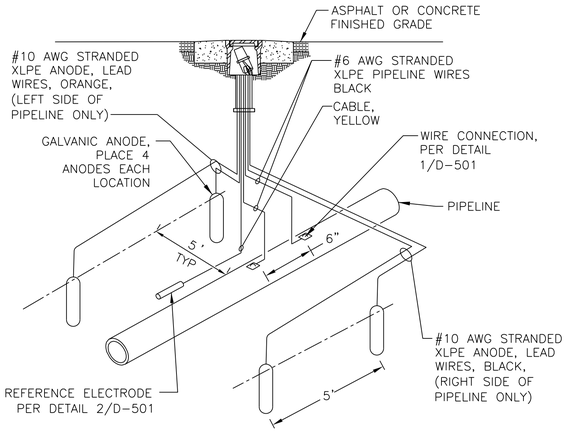

NOTES:

1. PLACE PLASTIC WARNING TAPE 12" ABOVE WIRE RUNS.
2. HORIZONTAL RUNS TO BE 36" BELOW GRADE.

1 GALVANIC ANODE TEST STATION
NOT TO SCALE

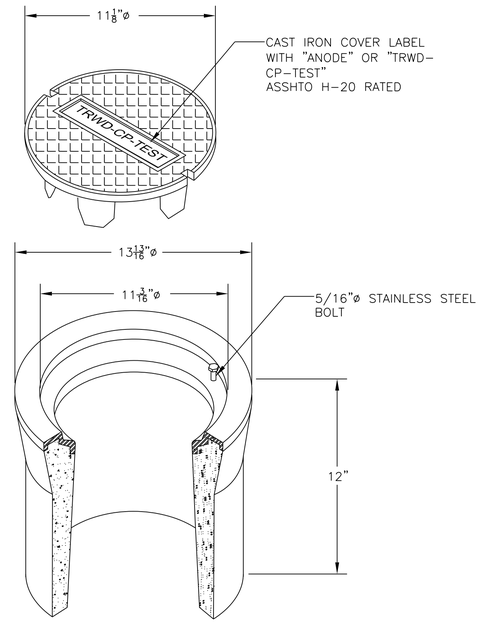

2 CONCRETE VALVE BOX
NOT TO SCALE

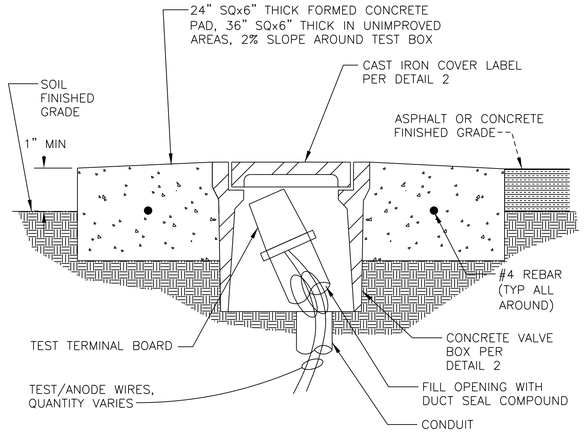

NOTES:

1. PROVIDE SLACK IN WIRES, 24" MINIMUM
2. INSTALL CONCRETE SLAB 1" TO 2" ABOVE FINISH GRADE IN OPEN AREAS AND FLUSH WITH FINISH GRADE IN ASPHALT OR CONCRETE PAVED AREAS.
3. PROVIDE 6" EXTENSIONS AS REQUIRED TO MATCH OR EXCEED PAVEMENT THICKNESS, NOT SHOWN.
4. BOTTOM OF TEST BOX SHALL BE NATIVE SOIL. DO NOT PLACE ROCK, GRAVEL, OR SAND IN TEST BOX.

3 TEST STATION
NOT TO SCALE

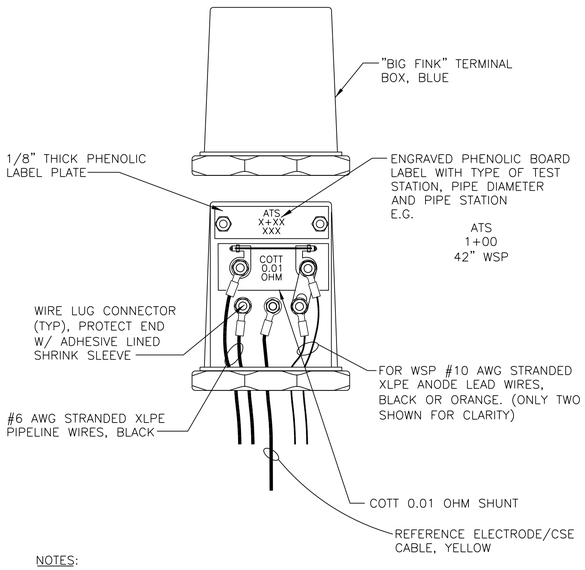

NOTES:

1. TERMINALS SHALL BE 1/4" NICKEL PLATED BRASS WITH LOCKING WASHER, TWO FLAT WASHERS, AND DOUBLE NUTS.
2. SOLDER ALL LUGS TO WIRES.

4 GALVANIC ANODE TEST STATION TEST TERMINAL BOARD
NOT TO SCALE

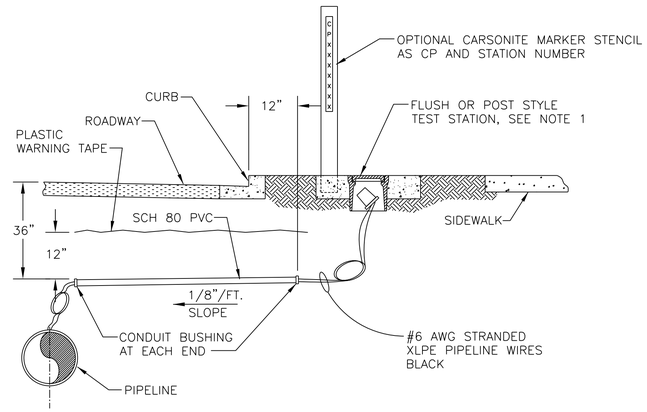

NOTES:

1. INSTALLATION SIMILAR FOR POST STYLE TEST STATION.
2. BURIED CONDUIT TO BE SCH 80 PVC.
3. SEAL BOTH ENDS OF RIGID CONDUIT WITH DUCT COMPOUND OR URETHANE FOAM.
4. EMBED CARSONITE MARKER IN CONCRETE.

5 ROADWAY OFFSET FLUSH MOUNTED TEST STATION
NOT TO SCALE

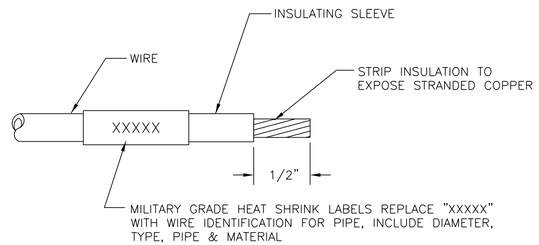

LEGEND:

WSP – WELDED STEEL PIPE
CSE – COPPER-COPPER SULFATE ELECTRODE
ANODE – GALVANIC ANODE

6 WIRE IDENTIFIER
NOT TO SCALE

PRELIMINARY PLAN
NOT FINAL - SUBJECT TO CHANGE

HDR Engineering Inc.
1917 South 67th Street
Omaha, NE 68106
Office: 402-399-1000
Nebraska C.O.A. CA-0443

S69

PROJECT NUMBER
xx-x(xxxx)

C.N.

LOCATION
SOUTH SARPY EXPRESSWAY

STRUCTURE NUMBER
—

26'-4" 1-SPAN PRECAST CONCRETE SLAB BRIDGE OVER EXISTING MUD 60" WATER MAIN UTILITY

CATHODIC PROTECTION DESIGN

COUNTY SARPY
HWY. NO. --
REF. POST. --
STA. 11558+09.47
DESIGN CODE LRFD 10th Edition

SKEW --°
ROADWAY --
FHWA CONST. TYPE --
DESIGN LIVE LOAD --

DESIGNED BY: D. WISNIESKI
DETAILED BY: M. MCKIBBIN
Q.C. ENGINEER: A. MCCUNE
DATE FEBRUARY 2026

SPECIAL PLAN NO. 3

7 / 9

Computer: 2MQ5022U0P
Date: 13-FEB-2026 14:55
File: NDOT_2D_SP3.dgn

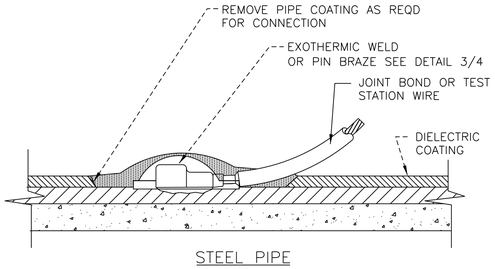

NOTE: PLACE CONNECTIONS AT PIPE JOINTS/SPECIALS TO MINIMIZE COATING DAMAGE.

1 - **WIRE-TO-STRUCTURE CONNECTION**
NOT TO SCALE

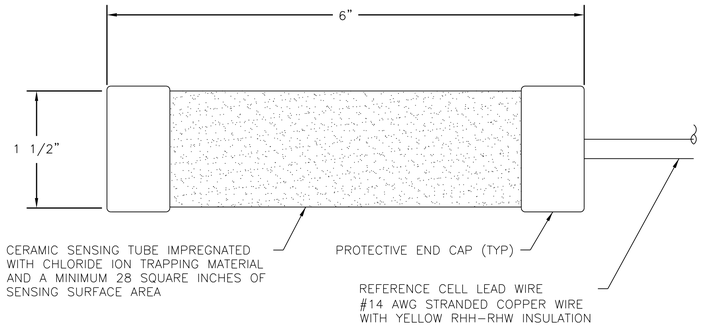

NOTES

1. THE REFERENCE ELECTRODE SHALL HAVE A MINIMUM SENSING SURFACE AREA OF 28 SQUARE INCHES. IT SHALL BE CAPABLE OF MAINTAINING A STABLE POTENTIAL WITHIN PLUS OR MINUS 10 MILLIVOLTS TO THAT OF A FRESHLY MADE COPPER SULFATE REFERENCE ELECTRODE WHILE A 3 MICROAMPERE ELECTRICAL CURRENT IS APPLIED TO IT. PROVIDE STELTH 2 MODEL SRE-007-CUY BY BORIN MANUFACTURING OR STAPERM MODEL CU-1-UGPC BY GMC CORROSION, OR APPROVED EQUAL
2. MEASURE THE ACCURACY OF EACH COPPER SULFATE REFERENCE ELECTRODE BEFORE INSTALLING IT BY MEASURING THE DC VOLTAGE DIFFERENCE BETWEEN IT AND ONE OR MORE REFERENCE ELECTRODES OF KNOWN ACCURACY. THE MEASUREMENTS SHALL BE LESS THAN PLUS OR MINUS 0.010 DC VOLTS FOR ALL REFERENCE ELECTRODES. PERFORM THESE MEASUREMENTS AFTER TOTALLY SUBMERGING THE REFERENCE ELECTRODES IN A FIVE-GALLON BUCKET OF WATER FOR A MINIMUM PERIOD OF 15 MINUTES. USE ONLY POTABLE DRINKING WATER FOR THIS TEST. BRACKISH WATER OR SALTWATER WILL AFFECT THE TEST RESULTS AND DAMAGE THE REFERENCE ELECTRODE. PROVIDE FIVE DAYS WRITTEN NOTICE TO THE ENGINEER TO ALLOW THESE TESTS TO BE WITNESSED.

2 - **COPPER SULFATE REFERENCE ELECTRODE CELL DETAIL**
NOT TO SCALE

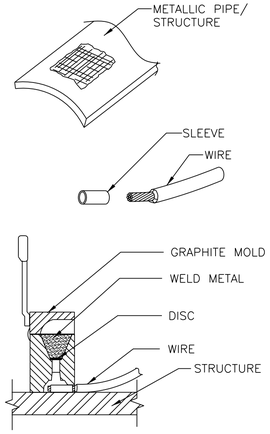

NOTES:
1. GRIND PIPE/STRUCTURE TO BARE METAL AND CLEAN SURFACE.
2. STRIP INSULATION FROM WIRE AND ATTACH SLEEVE.
3. HOLD MOLD FIRMLY WITH OPENING AWAY FROM OPERATOR. IGNITE WITH FLINT GUN, REMOVE SLAG FROM CONNECTION WITH CHIPPING HAMMER. TEST WELD WITH 22 OZ HAMMER W/ GLANCING BLOW. IF WELD FAILS, POSITION WIRE ATTACHMENT A MINIMUM 3" AWAY REPEATING THE ABOVE STEPS. ATTACH LEAD WIRES A MINIMUM 6" APART.
4. COVER CONNECTION WITH BITUMASTIC COATING OVER ALL EXPOSED METAL, PLACE WELD CAP OVER CONNECTION. REPAIR ALL DAMAGE TO COATING AND LINING IN ACCORDANCE WITH MFG RECOMMENDATIONS.
5. ALLOW COATING TO CURE BEFORE BURIAL.
6. ILLUSTRATION DEPICTS HORIZONTAL WELDER. FOR OTHER ORIENTATION USE MOLD RECOMMENDED BY MANUFACTURER.

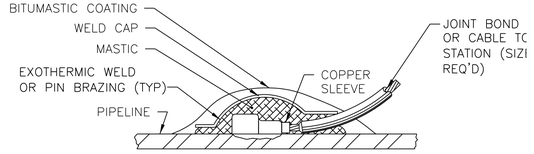

3 - **EXOTHERMIC WELD - OPTION**
NOT TO SCALE

GENERAL NOTES

1. ALL MATERIALS AND INSTALLATION METHODS SHALL BE IN ACCORDANCE WITH THESE DRAWINGS AND TECHNICAL SPECIFICATION SECTION 13115.
2. UNLESS OTHERWISE NOTED, DRAWINGS ARE NOT SHOWN TO SCALE.
3. CORROSION TEST STATIONS:
   A. PROVIDE 24" SLACK WIRE AT WELD TO PIPE AND COILED AT BASE OF TEST STATION.
   B. INSTALL REINFORCED CONCRETE PAD (24" SQ. x 6" THICK) PER DETAIL 3/D-500. USE No. 4 REBAR.
   C. IDENTIFY STRUCTURE LEADS WITH THE USE OF HEAT SHRINK SLEEVE MADE FROM DURABLE, FLAME RETARDANT, RADIATION-CROSSLINKED HEAT-SHRINKABLE POLYOLEFIN IN ACCORDANCE WITH MIL-M-81531 AND DETAIL 6/D-500.
   D. WIRE SIZE, INSULATION, AND COLORS SCHEDULE
      PROJECT PIPE LEADS - NO. 6 AWG STRANDED XLPE BLACK - TWO REQUIRED
      **PHASE TAPING OF WIRES FOR COLOR CODING IS NOT ALLOWED.
4. NO WIRE OR CABLE SPLICES ARE PERMITTED.
5. WIRE CONNECTIONS TO PIPE SHALL BE MADE BY THE PIN BRAZING PROCESS SHOWN ON DETAIL 4/D-501. ATTACH 1 WIRE PER WELD. ALL WELDS MUST BE SEPARATED BY 6" MINIMUM.
6. CONTRACTOR SHALL DOCUMENT ALL CHANGES FROM THESE DRAWINGS AND SUBMIT "AS-BUILT" DRAWINGS TO THE ENGINEER WITHIN 10 BUSINESS DAYS OF COMPLETION OF CP SYSTEM INSTALL.

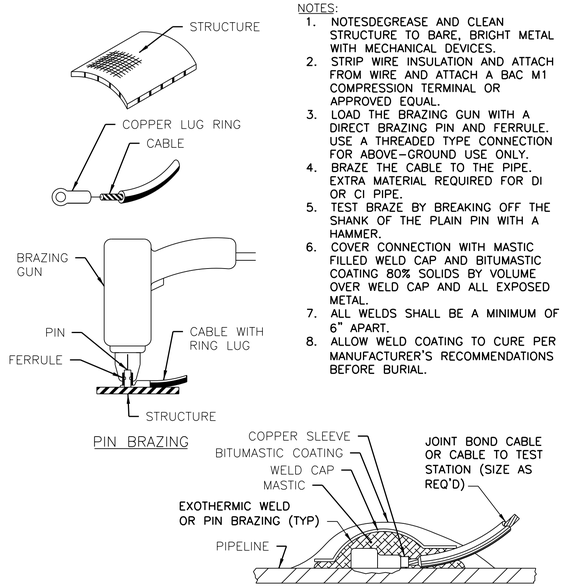

NOTES:
1. NOTESDEGREASE AND CLEAN STRUCTURE TO BARE, BRIGHT METAL WITH MECHANICAL DEVICES.
2. STRIP WIRE INSULATION AND ATTACH FROM WIRE AND ATTACH A BAC M1 COMPRESSION TERMINAL OR APPROVED EQUAL.
3. LOAD THE BRAZING GUN WITH A DIRECT BRAZING PIN AND FERRULE. USE A THREADED TYPE CONNECTION FOR ABOVE-GROUND USE ONLY.
4. BRAZE THE CABLE TO THE PIPE. EXTRA MATERIAL REQUIRED FOR DI OR CI PIPE.
5. TEST BRAZE BY BREAKING OFF THE SHANK OF THE PLAIN PIN WITH A HAMMER.
6. COVER CONNECTION WITH MASTIC FILLED WELD CAP AND BITUMASTIC COATING 80% SOLIDS BY VOLUME OVER WELD CAP AND ALL EXPOSED METAL.
7. ALL WELDS SHALL BE A MINIMUM OF 6" APART.
8. ALLOW WELD COATING TO CURE PER MANUFACTURER'S RECOMMENDATIONS BEFORE BURIAL.

4 - **PIN BRAZING WIRING-TO-STRUCTURE CONNECTION DETAIL**
NOT TO SCALE

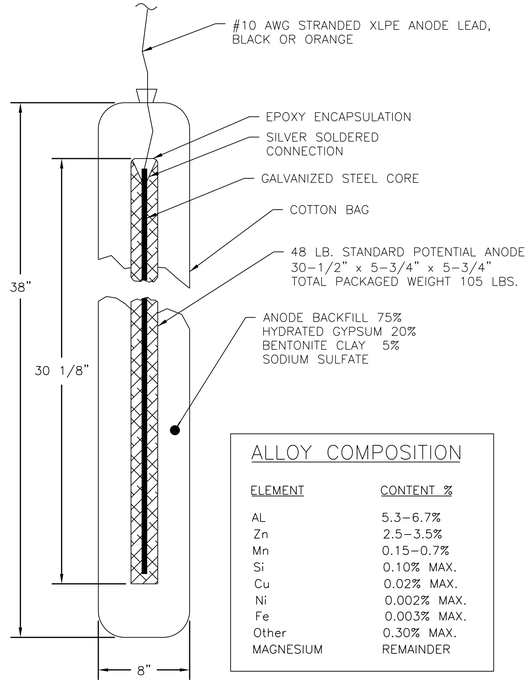

ALLOY COMPOSITION

ELEMENT	CONTENT %
AL	5.3-6.7%
Zn	2.5-3.5%
Mn	0.15-0.7%
Si	0.10% MAX.
Cu	0.02% MAX.
Ni	0.002% MAX.
Fe	0.003% MAX.
Other	0.30% MAX.
MAGNESIUM	REMAINDER

48LB HIGH POTENTIAL Mg ANODE

5 - **48LB. STANDARD POTENTIAL MAGNESIUM ANODE - WSP**
NOT TO SCALE

PRELIMINARY PLAN
NOT FINAL - SUBJECT TO CHANGE

HDR Engineering Inc.
1917 South 67th Street
Omaha, NE 68106
Office: 402-399-1000
Nebraska C.O.A. CA-0443

S71

PROJECT NUMBER
xx-x(xxxx)

C.N.

LOCATION
SOUTH SARPY EXPRESSWAY

STRUCTURE NUMBER
—

26'-4" 1-SPAN PRECAST CONCRETE SLAB BRIDGE OVER EXISTING MUD 60" WATER MAIN UTILITY

CATHODIC PROTECTION DESIGN

COUNTY SARPY
HWY. NO. --
REF. POST. --
STA. 11558+09.47
DESIGN CODE LRFD 10th Edition

SKEW --°
ROADWAY --
FHWA CONST. TYPE --
DESIGN LIVE LOAD --

Q.C. ENGINEER: A. MCCUNE DATE FEBRUARY 2026
DESIGNED BY: D. WISNIESKI DETAILED BY: M. MCKIBBIN

SPECIAL PLAN NO. 3
8 / 9

Computer: 2M05020.0P
Date: 13-FEB-2026 14:55
File: NDOT_2D_SP3.dgn

BILL OF BARS													
	MARK	NUMBER OF BARS	LENGTH	TYPE	A	B	C	D	E	F	PIN Ø	HOOK	WEIGHT (LB)
PRECAST SLAB BEAM	S1001	23	25'-10"	STR.									2557
	S702	27	11'-4"	STR.									626
	S503	12	35'-10"	STR.									324
	S504	27	11'-4"	STR.									320
												TOTAL (LB) =	3827

BILL OF BARS													
	MARK	NUMBER OF BARS	LENGTH	TYPE	A	B	C	D	E	F	PIN Ø	HOOK	WEIGHT (LB)
GRADE BEAM #1	B601	16	153'-8"	STR.									3693
	B502	312	8'-5"	107	2'-1"	1'-8"					2½"	5½"	2793
	B503	2	153'-8"	STR.									321
	B504	4	2'-8"	STR.									12
	B505	164	2'-10"	103	1'-2"	6"	1'-2"						485
												TOTAL (LB) =	7250

BILL OF BARS													
	MARK	NUMBER OF BARS	LENGTH	TYPE	A	B	C	D	E	F	PIN Ø	HOOK	WEIGHT (LB)
GRADE BEAM #1	B601	16	153'-8"	STR.									3693
	B502	312	8'-5"	107	2'-1"	1'-8"					2½"	5½"	2793
	B503	2	153'-8"	STR.									321
	B504	4	2'-8"	STR.									12
	B505	164	2'-10"	103	1'-2"	6"	1'-2"						485
												TOTAL (LB) =	7250

NOTE:
BILL OF BARS DOES NOT ACCOUNT FOR LAP SPLICES IN QUANTITIES.

BAR MARK

A413 A 4 13

- BAR NUMBER: 01 - 99
- BAR SIZE
- TYPE OF BRIDGE ELEMENT: (D = Drilled Shaft, A = Abutment, B = Bent, P = Pier, S = Slab & N = Approach Slab)

THE NUMBER OF LAP SPLICES ARE CALCULATED BASED ON 60'-0" LENGTHS OF REINFORCING STEEL BARS.
SPLICES ON BARS SHORTER THAN 60'-0" WILL REQUIRE ADDITIONAL LAP SPLICES AT NO ADDITIONAL EXPENSE TO NDOT.

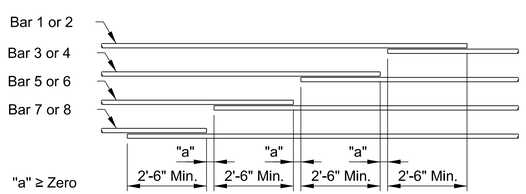

LAP DETAIL
Not to Scale

STANDARD HOOK LENGTH						PIN DIAMETER			
PRIMARY STRESS			STIRRUPS & TIES			PRIMARY STRESS		STIRRUPS & TIES	
BAR SIZE	HOOK 90°	HOOK 180°	BAR SIZE	HOOK 90°	HOOK 135°	BAR SIZE	Dp	BAR SIZE	Dp
			3	4"	4"			3	1½"
4	8"	6"	4	4½"	4½"	4	3"	4	2"
5	10"	7"	5	6"	5½"	5	3¾"	5	2½"
6	12"	8"	6	12"	8"	6	4½"	6	4½"
7	15"	10"	7	14"	9"	7	5¼"	7	5¼"
8	17"	11"	8	16"	10½"	8	6"	8	6"
9	19"	15"				9	9½"		
10	23"	17"	d = Bar Size Dp = Pin Diameter			10	10¾"		
11	24"	19"				11	12"		
14	31"	27"				14	18¼"		

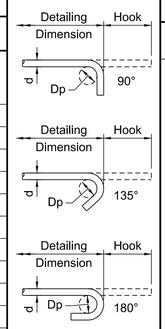

BENDING DIAGRAMS

ALL DIMENSIONS ARE OUT TO OUT & NOT TO SCALE

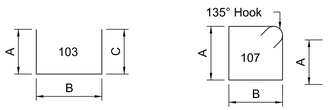

PRELIMINARY PLAN
NOT FINAL - SUBJECT TO CHANGE

HDR Engineering Inc.
1917 South 67th Street
Omaha, NE 68106
Office: 402-399-1000
Nebraska C.O.A. CA-0443

S72

PROJECT NUMBER
xx-x(xxxx)

C.N.

LOCATION
SOUTH SARPY EXPRESSWAY

STRUCTURE NUMBER
—

26'-4" 1-SPAN PRECAST CONCRETE SLAB BRIDGE OVER EXISTING MUD 60" WATER MAIN UTILITY

BILL OF BARS AND BENDING DIAGRAMS

COUNTY SARPY
HWY. NO. --
REF. POST. --
STA. 11558+09.47
DESIGN CODE LRFD 10th Edition

SKEW --°
ROADWAY --
FHWA CONST. TYPE --
DESIGN LIVE LOAD --

DESIGNED BY: D. WISNIESKI
DETAILED BY: M. MCKIBBIN
Q.C. ENGINEER: A. MCCUNE
DATE FEBRUARY 2026

SPECIAL PLAN NO. 3
9 / 9

Computer: 2MO5020.00P
Date: 13-FEB-2026 14:55
File: NDOT_2D_SP3.dgn

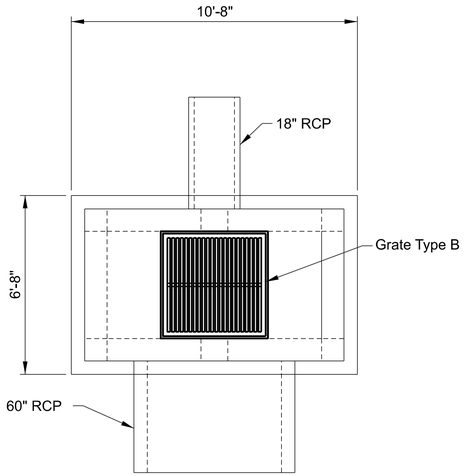

PLAN

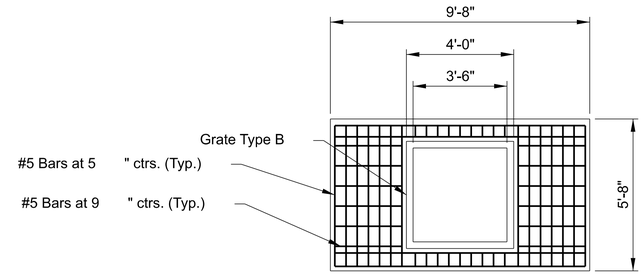

SECTION B

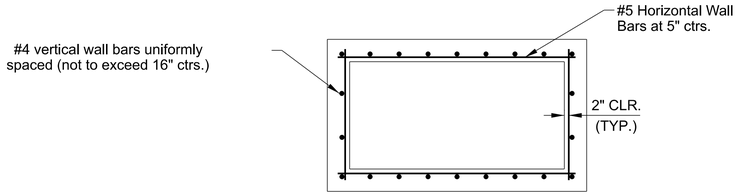

SECTION C

NOTES:

Modified NDOT manhole. For details not shown, see NDOT standard plan no. 435-R3, manhole.

The min. covering, measured from the face of the concrete to the surface of a reinforcing bar, shall be 2" except as shown.

The furnishing and placing of manhole steps shall be subsidiary to the manhole.

The top slab may be cast-in-place or precast, but if it is precast, it shall be set in a fresh bed of mortar and pointed up inside and out.

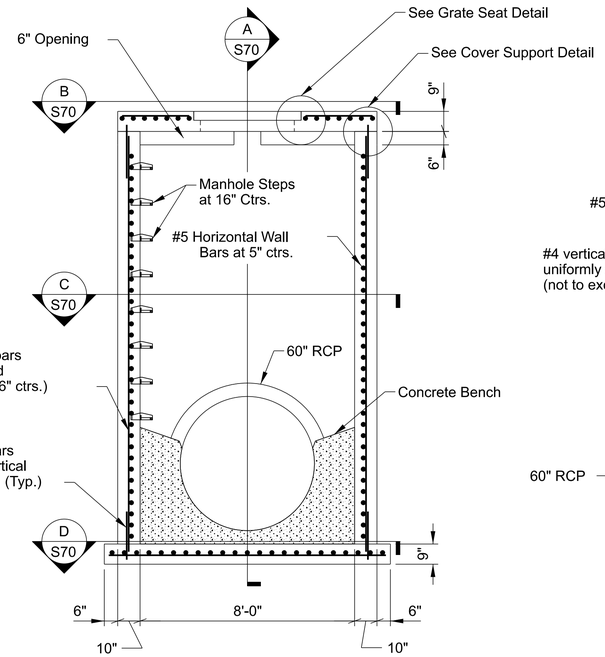

ELEVATION VIEW

DETAIL OF AREA INLET 1

Scale: $\frac{3}{8}$" = 1'-0"

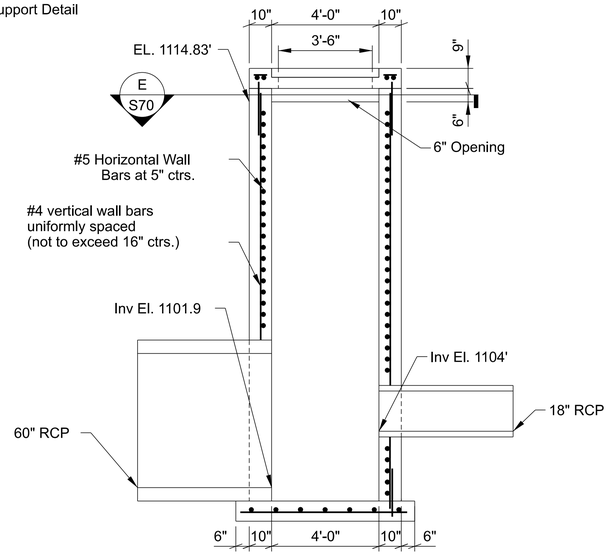

SECTION A

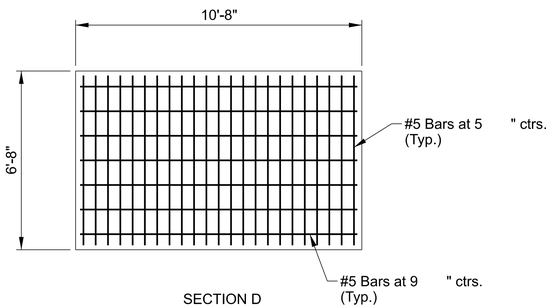

SECTION D

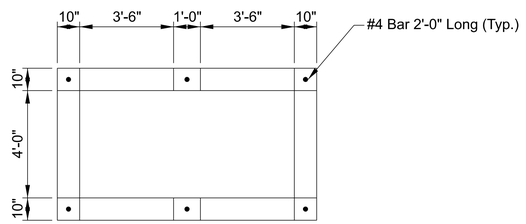

SECTION E

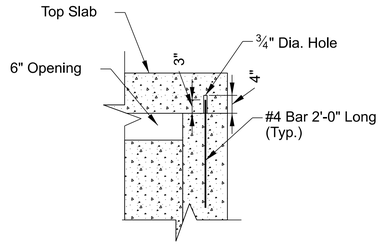

COVER SUPPORT DETAIL

Scale: $\frac{3}{4}$" = 1'-0"

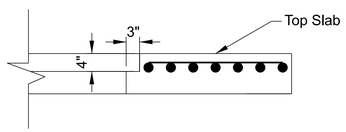

GRATE SEAT DETAIL

Scale: $\frac{3}{4}$" = 1'-0"

PRELIMINARY PLAN
NOT FINAL - SUBJECT TO CHANGE

HDR Engineering Inc.
1917 South 67th Street
Omaha, NE 68106
Office: 402-399-1000
Nebraska C.O.A. CA-0443

S70

PROJECT NUMBER
C-77 (25-15)

12/16/2025

LOCATION
SOUTH SARPY EXPRESSWAY

STRUCTURE NUMBER
-

AREA INLET DETAILS

(SHEET 1 OF 2)

DESIGNED BY: Y.MERCADO
DETAILED BY: Y.MERCADO
Q.C. ENGINEER: M. GIESMANN
DATE 12/16/2025

SPECIAL PLAN NO. 4

1 / 2

Computer: 2TK3200946
Date: 16-DEC-2025 14:49
File: SP4.dgn

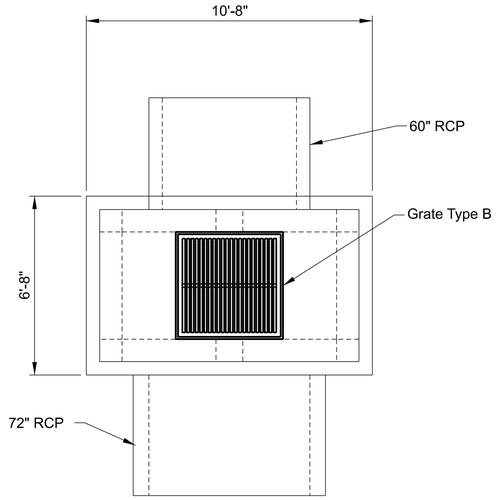

PLAN

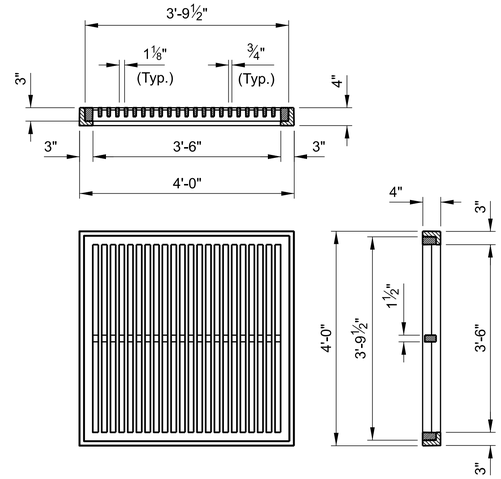

GRATE TYPE "B"
Clear Opening 6.6 Sq. Ft.
Weight Cast Iron 990 lbs.

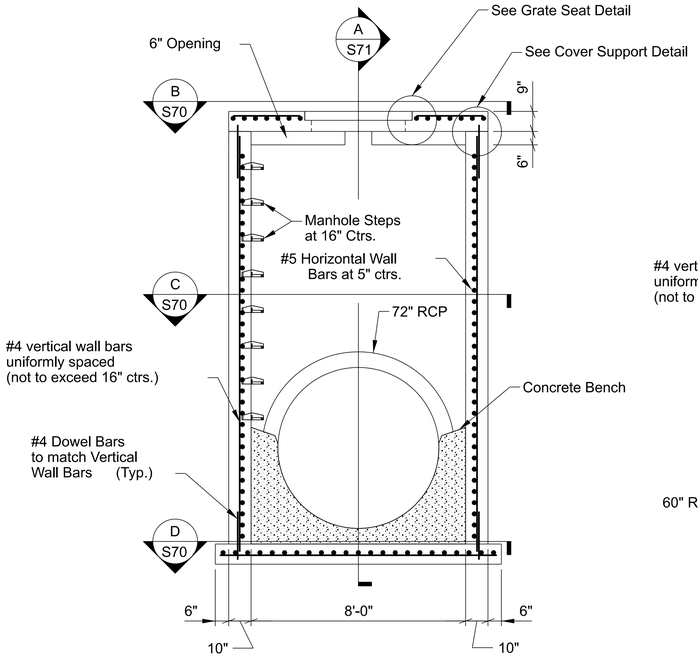

ELEVATION VIEW

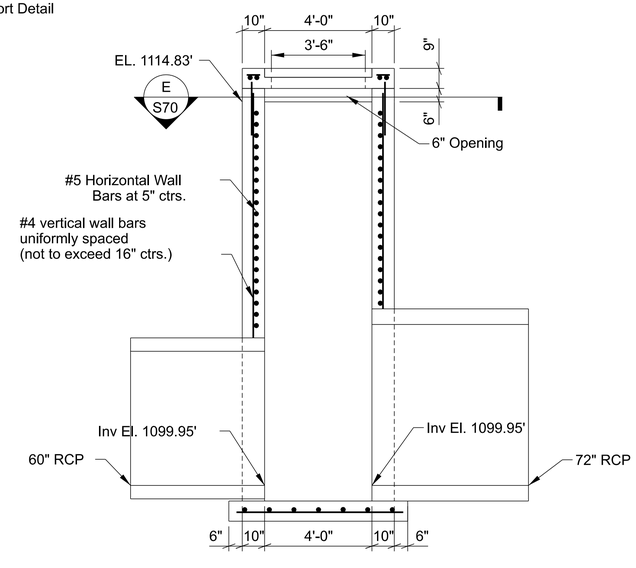

SECTION A

DETAIL OF AREA INLET 2

Scale: $\frac{3}{8}$" = 1'-0"

PRELIMINARY PLAN
NOT FINAL - SUBJECT TO CHANGE

HDR Engineering Inc.
1917 South 67th Street
Omaha, NE 68106
Office: 402-399-1000
Nebraska C.O.A. CA-0443

S71

PROJECT NUMBER
C-77 (25-15)

12/16/2025

LOCATION
SOUTH SARPY EXPRESSWAY

STRUCTURE NUMBER
-

AREA INLET DETAILS

(SHEET 2 0F 2)

DESIGNED BY: Y.MERCADO
DETAILED BY: Y.MERCADO
Q.C. ENGINEER: M. GIESMANN
DATE 12/16/2025

SPECIAL PLAN NO. 4

2 / 2

Computer: 2TK3200046
Date: 16-DEC-2025 14:49
File: SP4.dgn

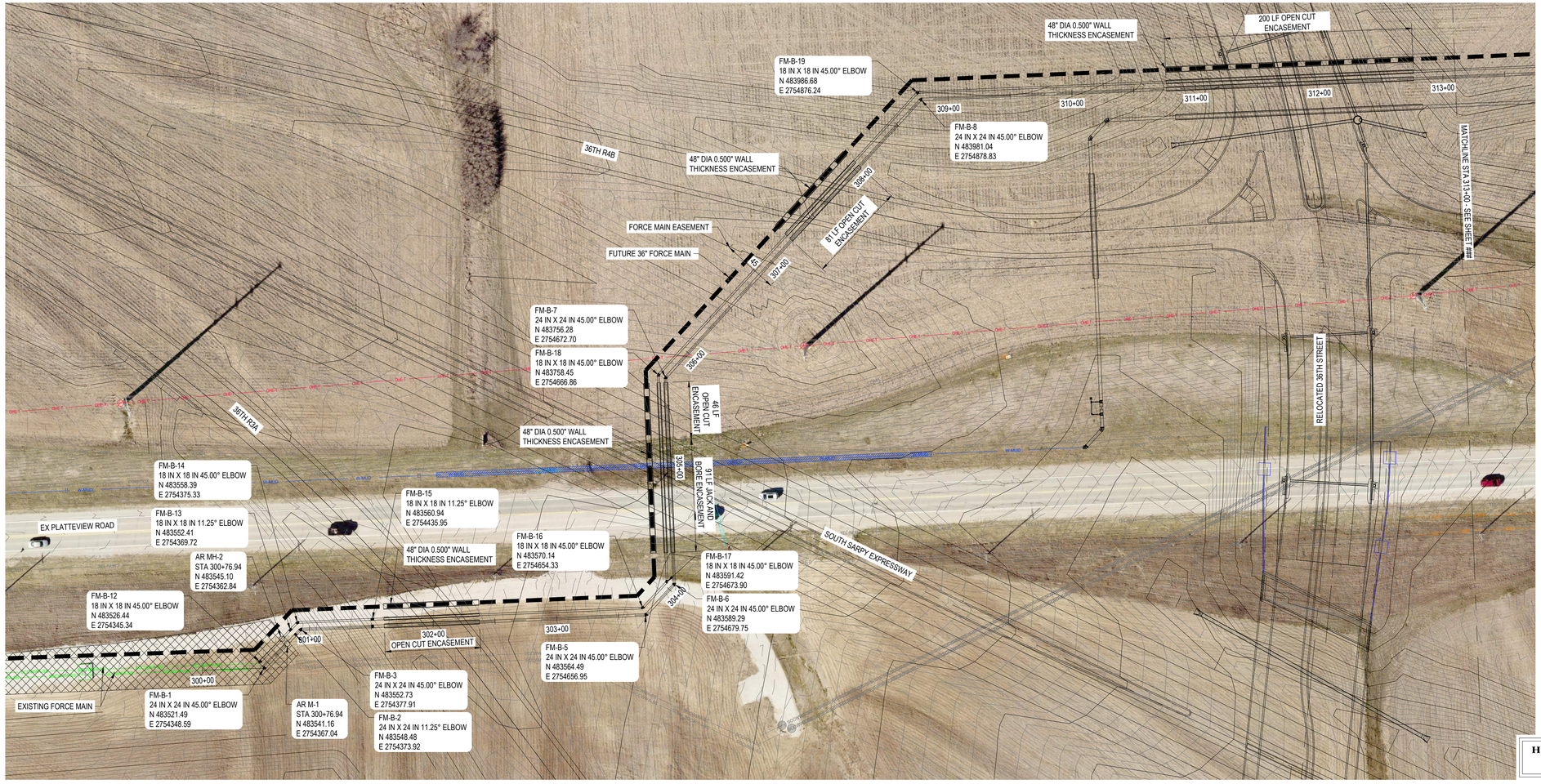

HORIZONTAL SCALE: 1"=50'
VERTICAL SCALE: 1"=5 '

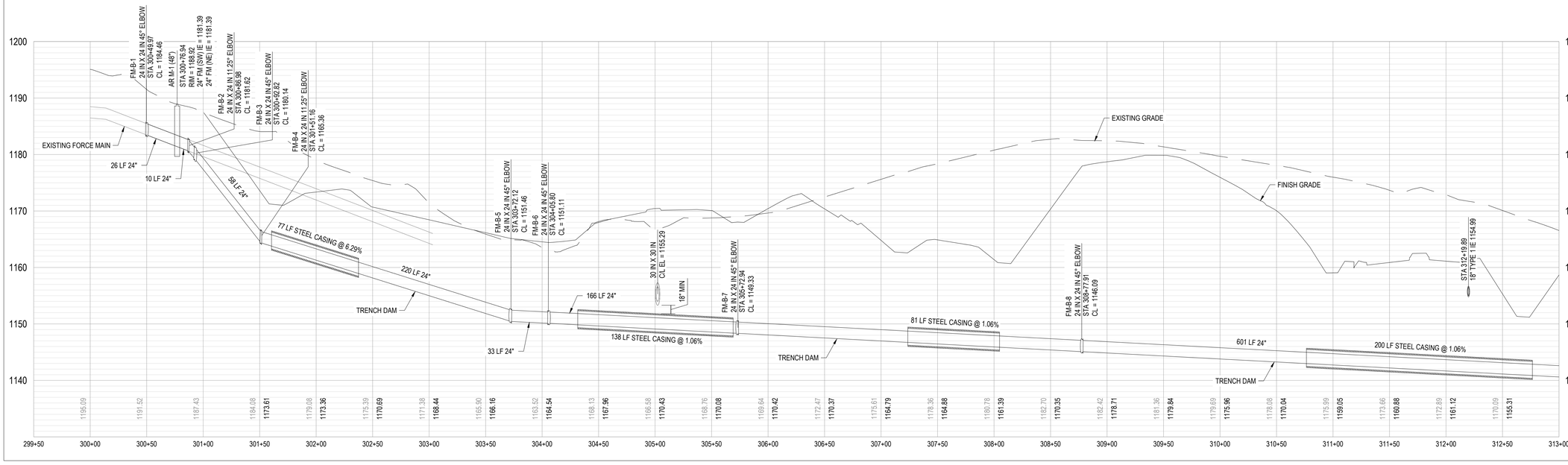

CONSTRUCTION NOTES:

1. CONTRACTOR SHALL SUBMIT A PIPE LAYING SCHEDULE FOR APPROVAL PRIOR TO ORDERING PIPE.
2. ALL MATERIALS FOR THE SANITARY SEWER COMPONENTS OF THIS PROJECT MUST MATCH THOSE OF THE MANUFACTURERS INSTALLED AS PART OF THE SCCWWA FORCE MAIN PROJECT.
3. INSTALLED FORCE MAINS SHALL BE PRESSURE TESTED IN ACCORDANCE WITH THE CONTRACT DOCUMENTS PRIOR TO PLACEMENT INTO SERVICE. NOTIFY THE SCCWWA CONSTRUCTION AND OPERATIONS SUPERINTENDENT A MINIMUM OF 48 HOURS PRIOR TO TESTING SO THAT THE SCCWWA CAN WITNESS THE PRESSURE TEST.
4. ALL TRACER WIRE INSTALLATION AND TESTING SHALL BE COORDINATED WITH THE SCCWWA CONSTRUCTION AND OPERATIONS SUPERINTENDENT AND SHALL MATCH THE EXISTING SYSTEM REQUIREMENTS.
5. SCCWWA CONSTRUCTION AND OPERATIONS SUPERINTENDENT:
   JACOB SLOBODNIK
   8901 S. 154TH STREET, SUITE #3
   OMAHA, NE 68138
   (712) 314-7173
   JSLOBODNIK@SCCWWA.ORG

S72

Project Number

C-77 (25-15)

2/9/2026

SOUTH SARPY EXPRESSWAY

SANITARY FORCE MAIN PLAN AND PROFILE

SPECIAL PLAN 5 - UTILITY RELOCATIONS

SARPY COUNTY

HDR ENGINEERING INC.
1917 S 67TH STREET
OMAHA, NE 68106
OFFICE: 402-399-1000
NEBRASKA C.O.A. #CA-0443

NOT FINAL
DRAFT PLAN
SUBJECT TO CHANGE

FILENAME:C:\pwworking\central\d0104625459\104115S3-S1-S-FMPP-01.dwg PLOTTED:2/9/2026 1:04 PM Ortiz, Anita

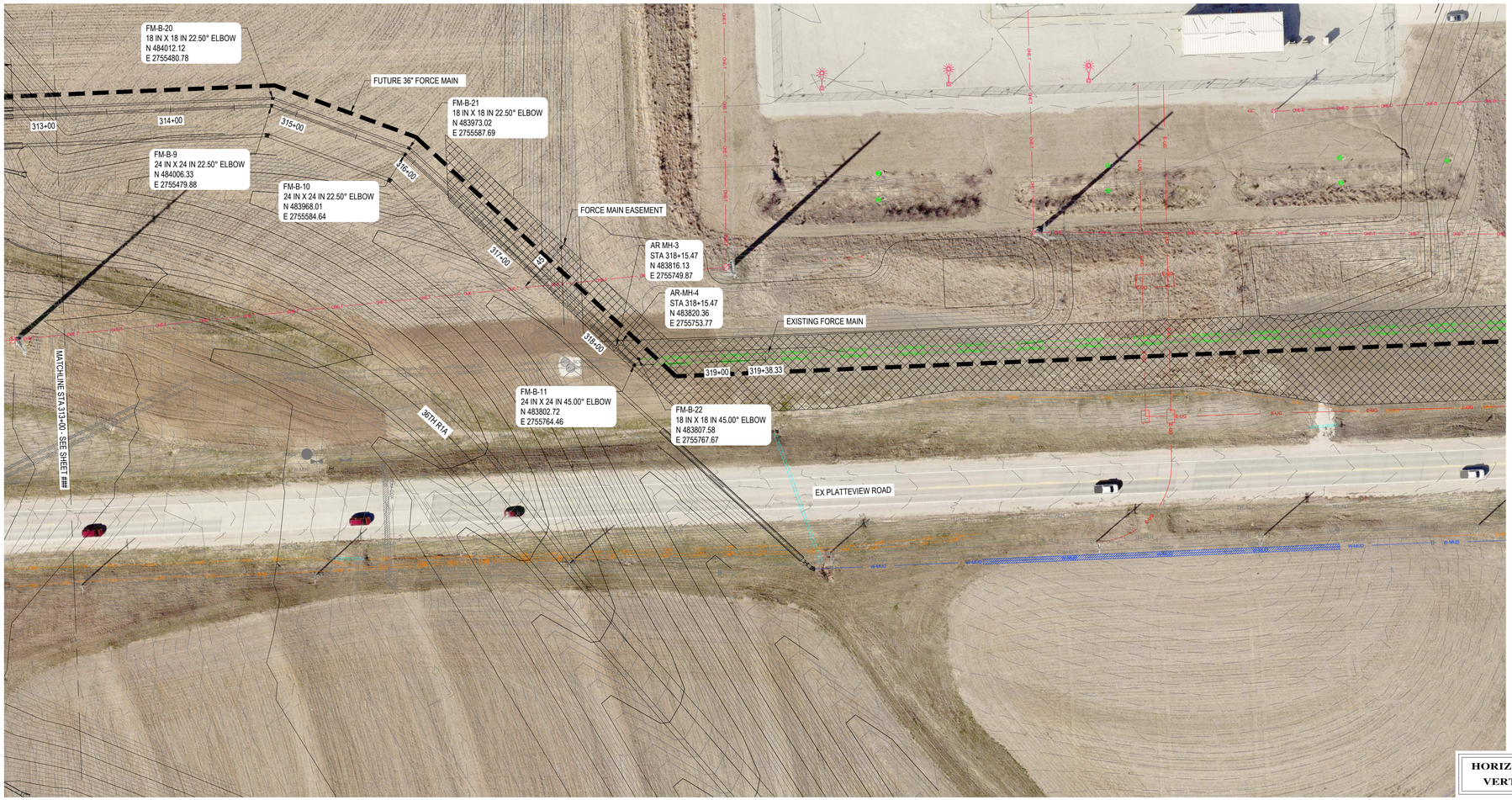

HORIZONTAL SCALE: 1"=50'
VERTICAL SCALE: 1"=5 '

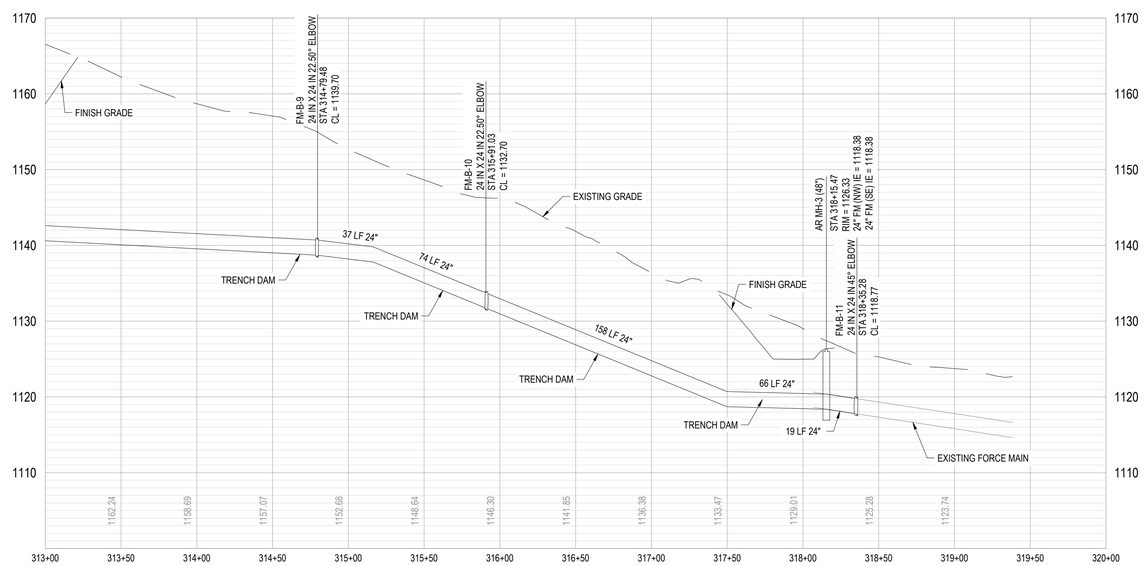

FILENAME:C:\pwworking\central\d1\d462545\91\041115S3-S1-S-PMPP-01.dwg PLOTTED:2/9/2026 1:00 PM Ortiz, Anita

S73

Project Number

C-77 (25-15)

2/9/2026

SOUTH SARPY EXPRESSWAY

SANITARY FORCE MAIN PLAN AND PROFILE

SPECIAL PLAN 5 - UTILITY RELOCATIONS

SARPY COUNTY

HDR ENGINEERING INC.
1917 S 67TH STREET
OMAHA, NE 68106
OFFICE: 402-399-1000
NEBRASKA C.O.A. #CA-0443

NOT FINAL
DRAFT PLAN
SUBJECT TO CHANGE

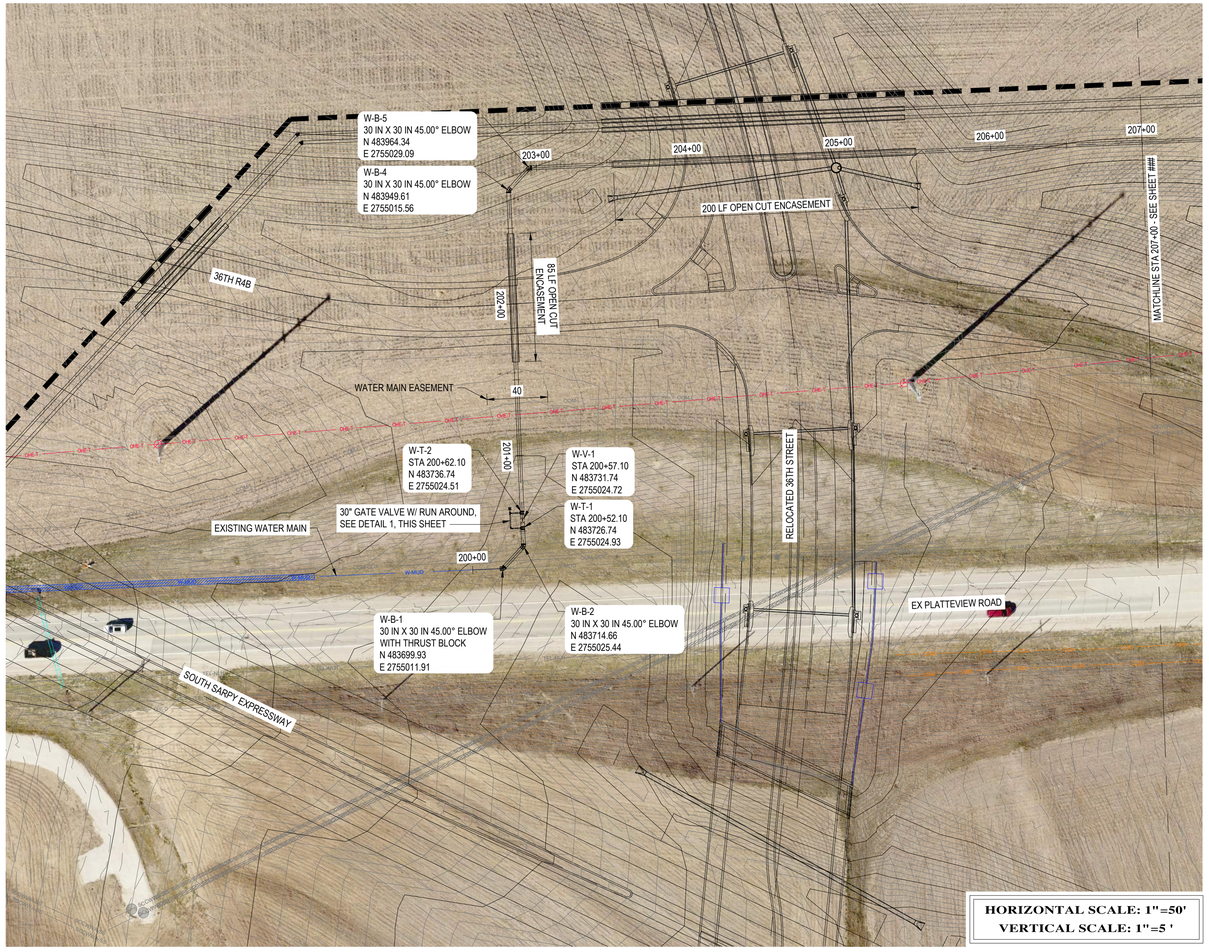

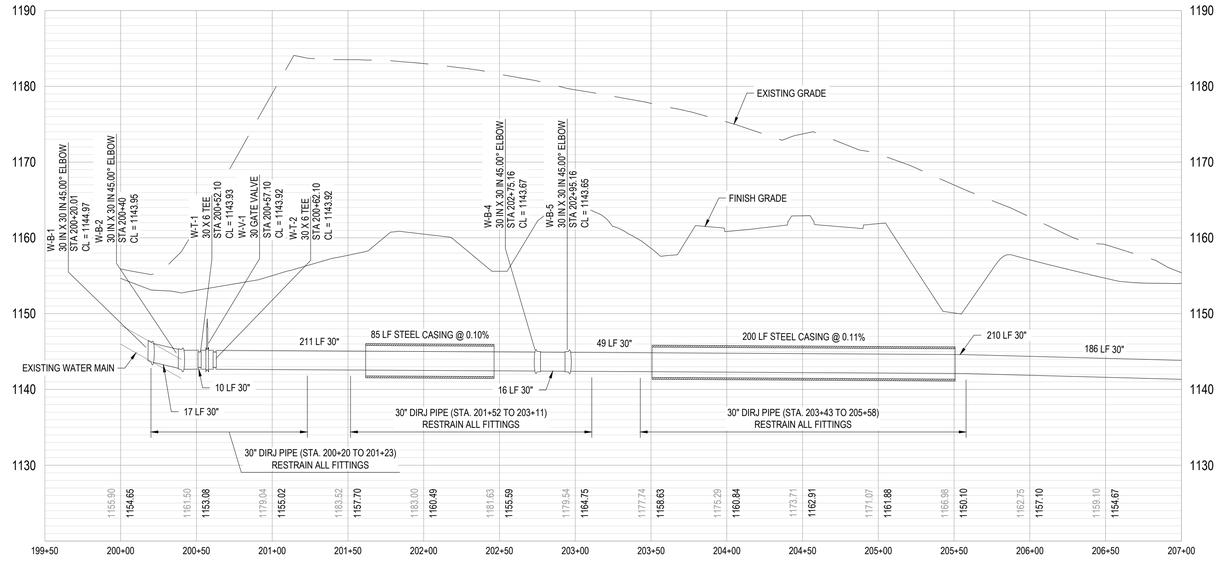

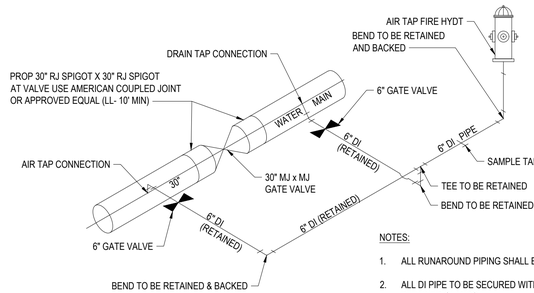

NOTES:

1. ALL RUNAROUND PIPING SHALL BE 6" CL 52 DI
2. ALL DI PIPE TO BE SECURED WITH WEDGE ACTION DI RETAINER GLANDS.
3. ORIENT AIR TAP CONNECTION ON THE SIDE OF VALVE WITH LOWER ELEVATION. ORIENT DRAIN CONNECTION ON THE SIDE OF VALVE WITH HIGHER ELEVATION. ORIENT HYDRANT PER PLAN AND FIELD ENGINEER.

1 30" RUN - AROUND DETAIL

NOT TO SCALE

S74

Project Number

C-77 (25-15)

2/9/2026

SOUTH SARPY EXPRESSWAY

WATER MAIN PLAN AND PROFILE

SPECIAL PLAN 5 - UTILITY RELOCATIONS

SARPY COUNTY

HDR ENGINEERING INC.
1917 S 67TH STREET
OMAHA, NE 68106
OFFICE: 402-399-1000
NEBRASKA C.O.A. #CA-0443

NOT FINAL
DRAFT PLAN
SUBJECT TO CHANGE

FILENAME:C:\pwworking\central\d0104625459\d0410411553-S1-S-WMPP-02.dwg PLOTTED:2/9/2026 1:55 PM Ortiz, Anita

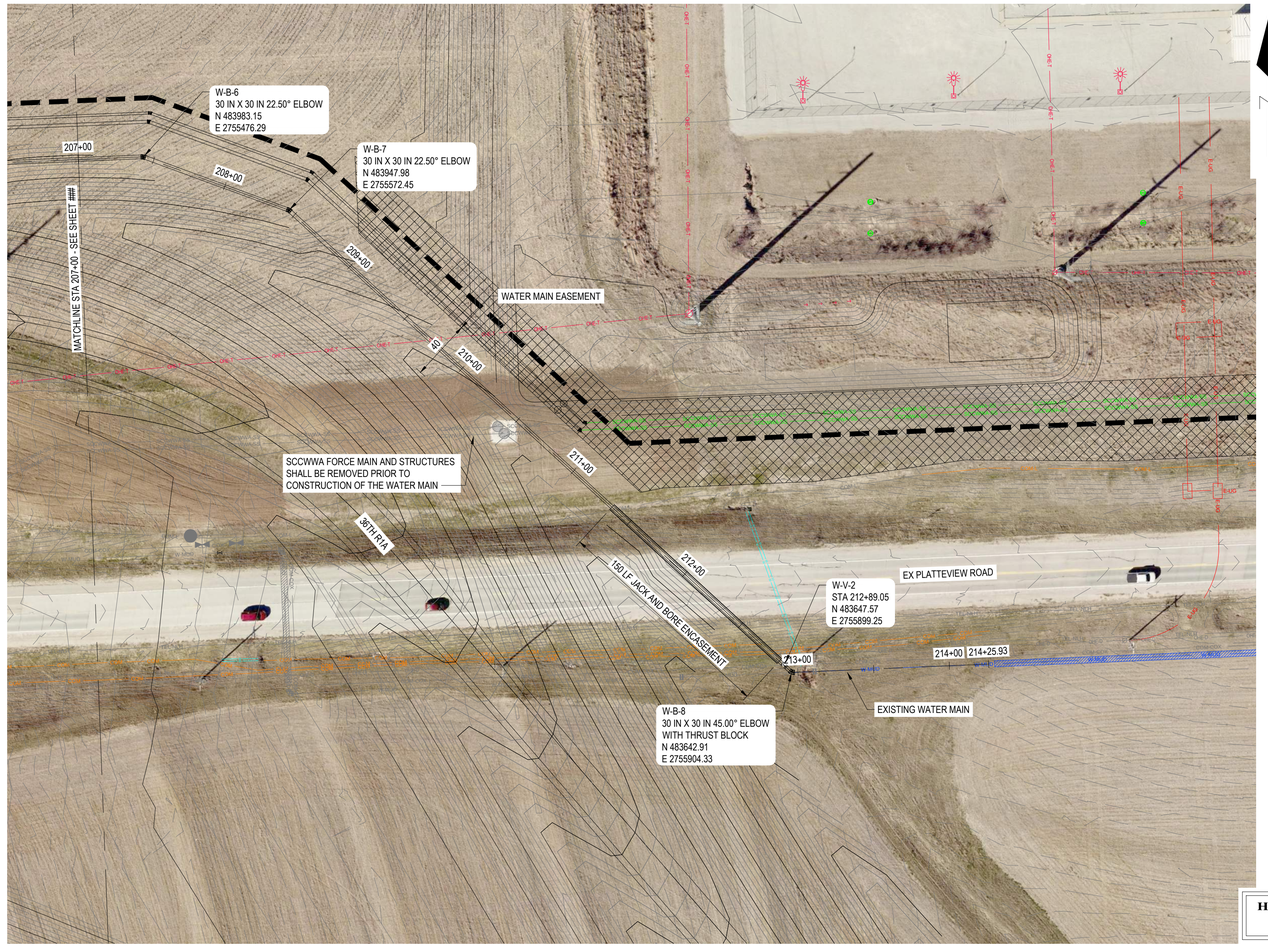

HORIZONTAL SCALE: 1"=50'
VERTICAL SCALE: 1"=5 '

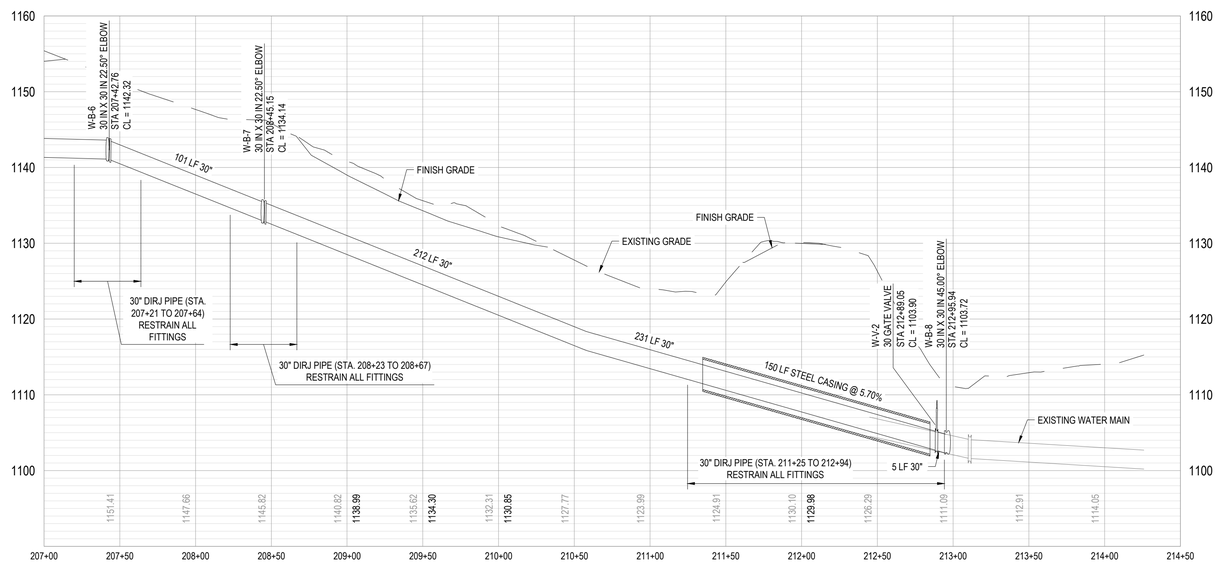

S75

Project Number

C-77 (25-15)

2/9/2026

SOUTH SARPY EXPRESSWAY

WATER MAIN PLAN AND PROFILE

SPECIAL PLAN 5 - UTILITY RELOCATIONS

SARPY COUNTY

HDR ENGINEERING INC.
1917 S 67TH STREET
OMAHA, NE 68106
OFFICE: 402-399-1000
NEBRASKA C.O.A. #CA-0443

NOT FINAL
DRAFT PLAN
SUBJECT TO CHANGE

FILENAME:C:\pwworking\centa01\d4625459\I10411553-S1-S-WMPP-02.dwg PLOTTED:2/9/2026 1:53 PM Ortiz, Anita

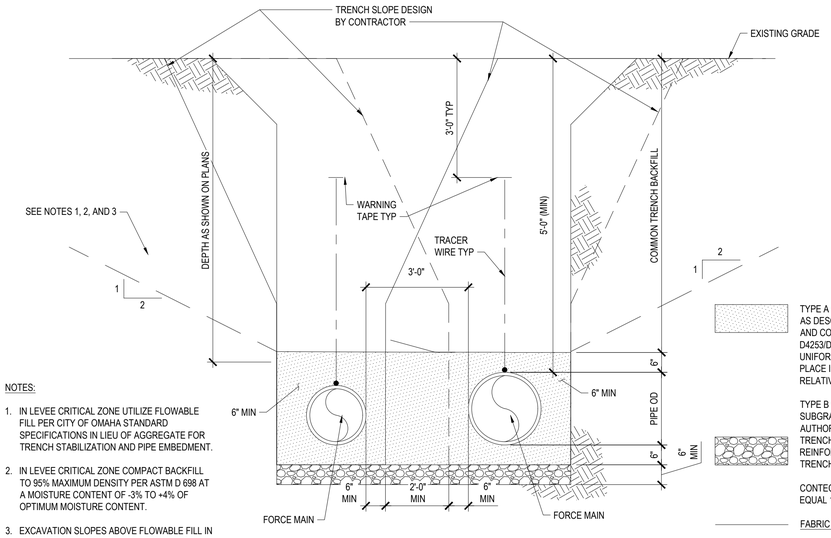

NOTES:

1. IN LEVEE CRITICAL ZONE UTILIZE FLOWABLE FILL PER CITY OF OMAHA STANDARD SPECIFICATIONS IN LIEU OF AGGREGATE FOR TRENCH STABILIZATION AND PIPE EMBEDMENT.
2. IN LEVEE CRITICAL ZONE COMPACT BACKFILL TO 95% MAXIMUM DENSITY PER ASTM D 698 AT A MOISTURE CONTENT OF -3% TO +4% OF OPTIMUM MOISTURE CONTENT.
3. EXCAVATION SLOPES ABOVE FLOWABLE FILL IN LEVEE CRITICAL ZONE SHALL BE 2H : 1V OR FLATTER FOR STABILITY.

TYPE A AGGREGATE-GRANULAR EMBEDMENT - SAND MATERIAL. INSTALL AS DESCRIBED BELOW: PIPE BED: PLACE IN MAXIMUM 4" LOOSE LIFTS AND COMPACT TO MINIMUM 70% RELATIVE DENSITY PER ASTM D4253/D4254. LOOSELY PLACE REMAINING 2" OF BEDDING TO PROVIDE UNIFORM SUPPORT FOR THE PIPE. PIPE HAUNCHING AND EMBEDMENT: PLACE IN MAXIMUM 6" LOOSE LIFTS AND COMPACT TO MINIMUM 70% RELATIVE DENSITY PER ASTM D4253/D4254.

TYPE B AGGREGATE-CRUSHED ROCK FOUNDATION MATERIAL FOR SUBGRADE STABILIZATION. INSTALL ONLY WITH ENGINEERS AUTHORIZATION. PLACE AND COMPACT AS REQUIRED TO STABILIZE TRENCH BOTTOM. RECYCLED CRUSHED CONCRETE FREE FROM REINFORCING STEEL MAY BE USED IN LIEU OF TYPE B AGGREGATE FOR TRENCH STABILIZATION.

CONTECH "C 60NW" NONWOVEN GEOTEXTILE FABRIC OR APPROVED EQUAL 12-INCH MINIMUM LAP AT JOINTS AND EDGES.

FABRIC IS REQUIRED AT THE FOLLOWING LOCATION:

SEGMENT 4 -
STA 7281+00 to STA 7306+50

1 - TYPICAL TRENCH SECTION

NOT TO SCALE

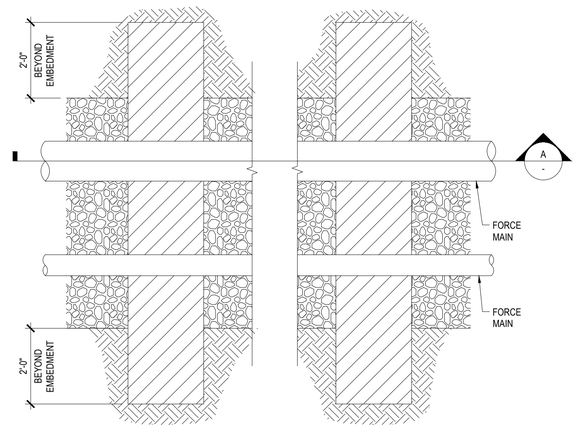

PLAN VIEW

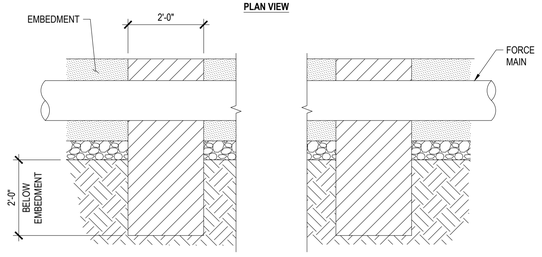

SECTION A

NOTE:

1. TRENCH DAMS SHALL BE KEYED INTO THE NATIVE SOIL AND CONSIST OF BENTONITE OR LOW PERMEABLE MATERIAL SUCH AS LEAN CLAY.

2 - TRENCH DAM DETAIL

NOT TO SCALE

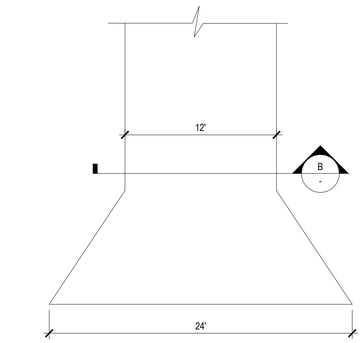

PLAN VIEW

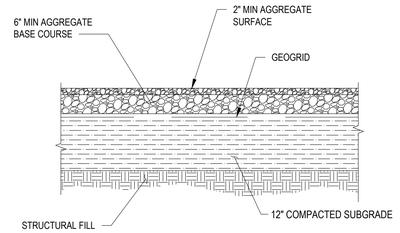

SECTION B

NOTES:

1. GEOGRID TO BE TENSAR BX1100 OR EQUIVALENT.
2. REFER TO CITY OF OMAHA STANDARD SPECIFICATIONS FOR PUBLIC WORKS CONSTRUCTION 2020 SECTION 300, TABLE 300.01 AND SECTION 302, TABLE 302.01 FOR AGGREGATE GRADATION REQUIREMENTS.
3. DETAILS APPLIES TO AGGREGATE DRIVES AND AGGREGATE ROAD REPLACEMENT.
4. RECYCLED CONCRETE, FREE OF REINFORCING STEEL, MAY BE USED IN LIEU OF THE SPECIFIED AGGREGATE FOR MAINTENANCE ACCESS DRIVES. THE SPECIFIED AGGREGATE SHALL BE USED FOR PUBLIC ROADS AND PRIVATE DRIVEWAYS.

3 - TYPICAL AGGREGATE DRIVE DETAIL

NOT TO SCALE

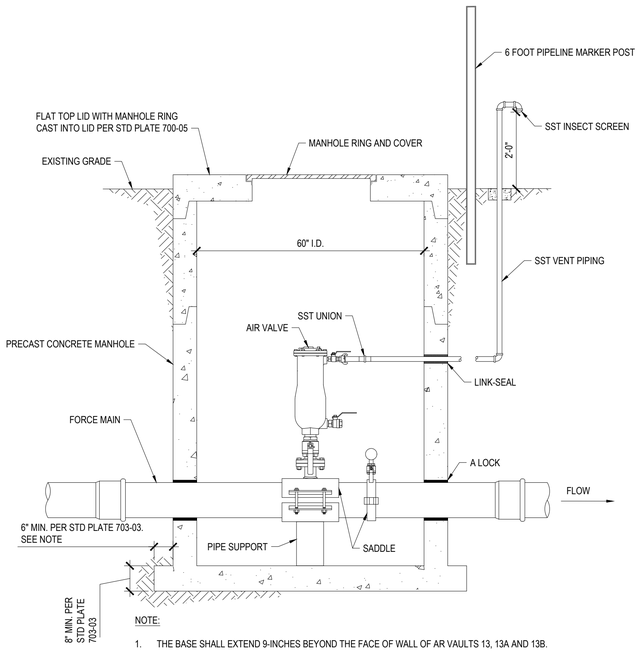

NOTE:

1. THE BASE SHALL EXTEND 9-INCHES BEYOND THE FACE OF WALL OF AR VAULTS 13, 13A AND 13B.

4 - AIR RELEASE / VACUUM RELIEF VALVE VAULT DETAIL

NOT TO SCALE

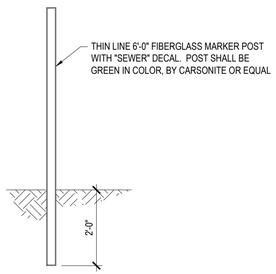

NOTE:

1. PROVIDE MARKER POST AT EACH AIR VALVE VAULT, PIGGING STATION, AND TRACER WIRE ACCESS BOX LOCATION

5 - MARKER POST DETAIL

NOT TO SCALE

S76

Project Number

C-77 (25-15)

12/16/2025

SOUTH SARPY EXPRESSWAY - EWP

CIVIL DETAILS

SPECIAL PLAN 5 - UTILITY RELOCATIONS

SARPY COUNTY

HDR ENGINEERING INC.
1917 S 67TH STREET
OMAHA, NE 68106
OFFICE: 402-399-1000
NEBRASKA C.O.A. #CA-0443

NOT FINAL
DRAFT PLAN
SUBJECT TO CHANGE

FILENAME: c:\pwworking\central\01046254591\04115S3-S1-S-CDTL-01.dwg PLOTTED: 12/16/2025 10:46 AM Ortiz, Anita

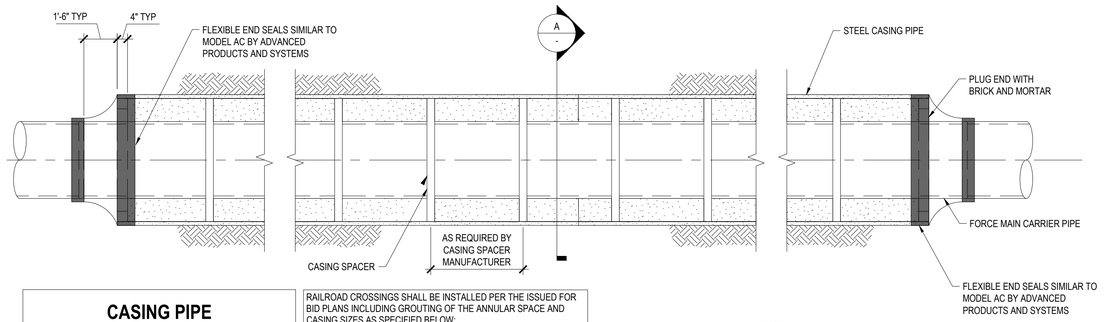

CASING PIPE

ALL LOCATIONS EXCEPT RAILROAD CROSSINGS		
CARRIER PIPE DIAMETER (INCHES)	CASING PIPE	
	DIAMETER (INCHES)	THICKNESS (INCHES)
16	24	0.3750
20	30	0.375
18	24	0.375
24	30	0.375
30	42	0.500
36	48	0.500

RAILROAD CROSSINGS SHALL BE INSTALLED PER THE ISSUED FOR BID PLANS INCLUDING GROUTING OF THE ANNULAR SPACE AND CASING SIZES AS SPECIFIED BELOW:

CARRIER PIPE DIA (IN)	CASING DIA (IN)	CASING THICKNESS (IN)
16	26	0.438
18	28	0.438
20	30	0.500
24	34	0.500

NOTE:

1. GIVEN DIMENSIONS AND THICKNESS ARE MINIMUMS AND DO NOT CONSIDER CONTRACTOR'S METHODS OR INSTALLATION LOADINGS. CONTRACTOR SHALL BE RESPONSIBLE FOR PROVIDING STEEL CASING OF ADEQUATE DIAMETERS AND THICKNESSES FOR SEWER CONSTRUCTION AND ACCOMMODATE CONSTRUCTION METHODS.

1 - **STEEL CASED CROSSING DETAIL**
NOT TO SCALE

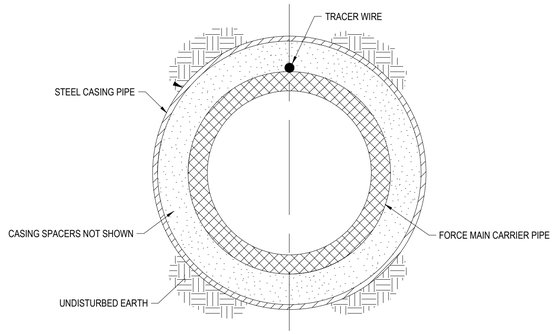

NOTE:

1. TRACER WIRE SHALL BE ATTACHED TO PIPE PRIOR TO INSTALLATION THROUGH ENCASEMENT.

A - **PIPE TUNNEL SECTION**
NOT TO SCALE

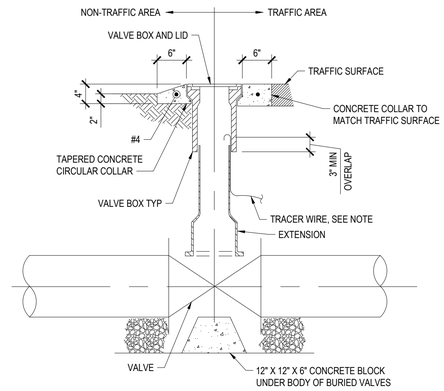

NOTE:

1. COIL ENOUGH WIRE AT EACH VALVE BOX TO EXTEND WIRE ONE FOOT ABOVE THE GROUND SURFACE.

2 - **BURIED IN-LINE VALVE BOX WITH TRACER WIRE**
NOT TO SCALE

NOTES:

1. CURB BOXES TO BE INSTALLED FLUSH WITH GROUND AND LOCATED OVER OR NEAR FORCE MAIN TO WHICH TRACER WIRE IS ATTACHED.
2. COIL ENOUGH WIRE AT EACH BOX TO EXTEND WIRE ONE FOOT ABOVE THE GROUND SURFACE.
3. INSTALL TRACER WIRE AS A SINGLE CONTINUOUS PASS FROM EACH VALVE BOX OR STRUCTURE. SPLICING OF WIRE, IF NECESSARY, SHALL BE DONE USING WATERPROOF CONNECTORS DESIGNED FOR DIRECT BURIAL AND SHALL PRODUCE AN ELECTRICALLY AND MECHANICALLY SOUND CONNECTION.
4. MARK ACCESS BOX LOCATIONS WITH MARKER POST.
5. ACCESS BOX LOCATIONS ARE SHOWN ON THE PLANS. ACCESS BOX LOCATION SPACING SHALL BE APPROXIMATELY 500 FEET.

3 - **TRACER WIRE ACCESS BOX DETAIL**
NOT TO SCALE

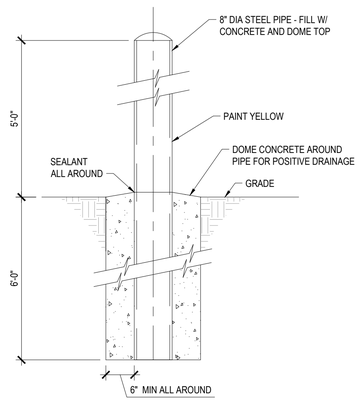

4 - **BOLLARD DETAIL**
NOT TO SCALE

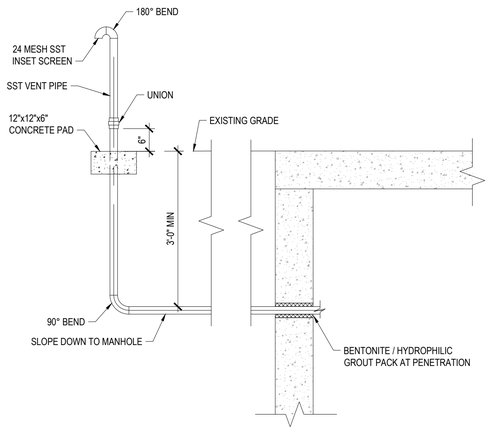

5 - **AIR VALVE VENT PIPE DETAIL**
NOT TO SCALE

S77

Project Number

C-77 (25-15)

1/8/2026

SOUTH SARPY EXPRESSWAY

CIVIL DETAILS

SPECIAL PLAN 5 - UTILITY RELOCATIONS

SARPY COUNTY

HDR ENGINEERING INC.
1917 S 67TH STREET
OMAHA, NE 68106
OFFICE: 402-399-1000
NEBRASKA C.O.A. #CA-0443

NOT FINAL
DRAFT PLAN
SUBJECT TO CHANGE

FILENAME:C:\pw\working\centsa01\d462\d459\d411553-S1-S-CDTL-01.dwg PLOTTED: 1/8/2026 2:42 PM Ortiz, Anita

811 Know what's below. Call before you dig. 1-800-331-5666

HDR

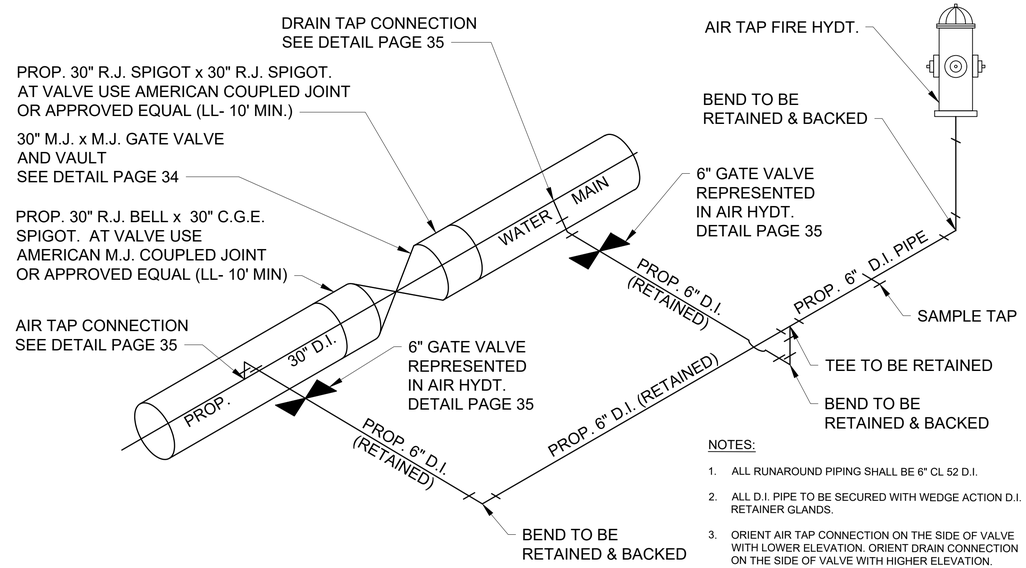

NOTES:

1. ALL RUNAROUND PIPING SHALL BE 6" CL 52 D.I.
2. ALL D.I. PIPE TO BE SECURED WITH WEDGE ACTION D.I. RETAINER GLANDS.
3. ORIENT AIR TAP CONNECTION ON THE SIDE OF VALVE WITH LOWER ELEVATION. ORIENT DRAIN CONNECTION ON THE SIDE OF VALVE WITH HIGHER ELEVATION. ORIENT HYDRANT PER PLAN AND FIELD ENGINEER.

30"AIR TAP/ DRAIN HYDT. RUN-AROUND DUCTILE IRON

NO SCALE STA: 131+47, 156+53

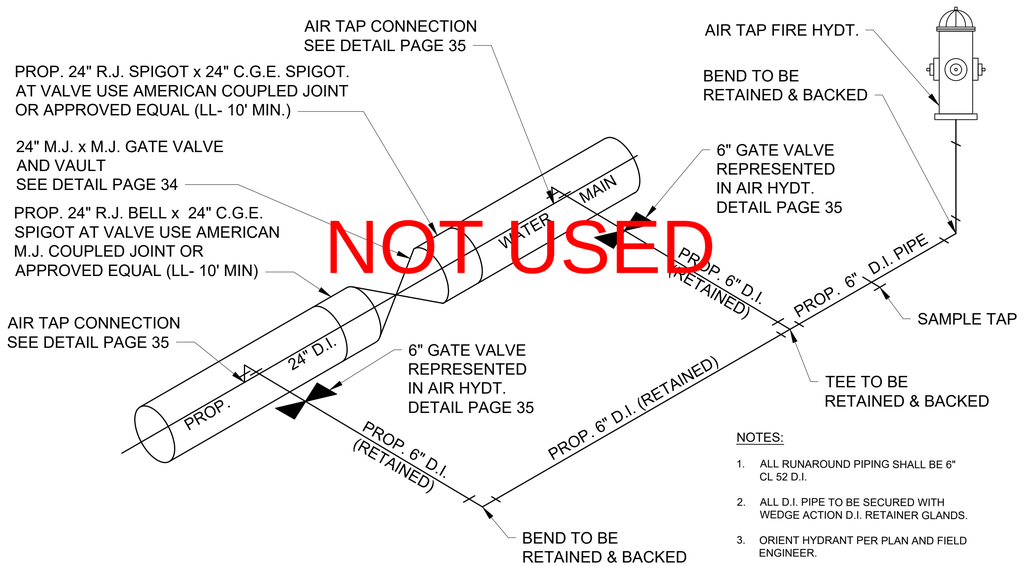

NOTES:

1. ALL RUNAROUND PIPING SHALL BE 6" CL 52 D.I.
2. ALL D.I. PIPE TO BE SECURED WITH WEDGE ACTION D.I. RETAINER GLANDS.
3. ORIENT AIR TAP CONNECTION ON THE SIDE OF VALVE WITH LOWER ELEVATION. ORIENT DRAIN CONNECTION ON THE SIDE OF VALVE WITH HIGHER ELEVATION. ORIENT HYDRANT PER PLAN AND FIELD ENGINEER.

24"AIR TAP RUN-AROUND DUCTILE IRON

NO SCALE

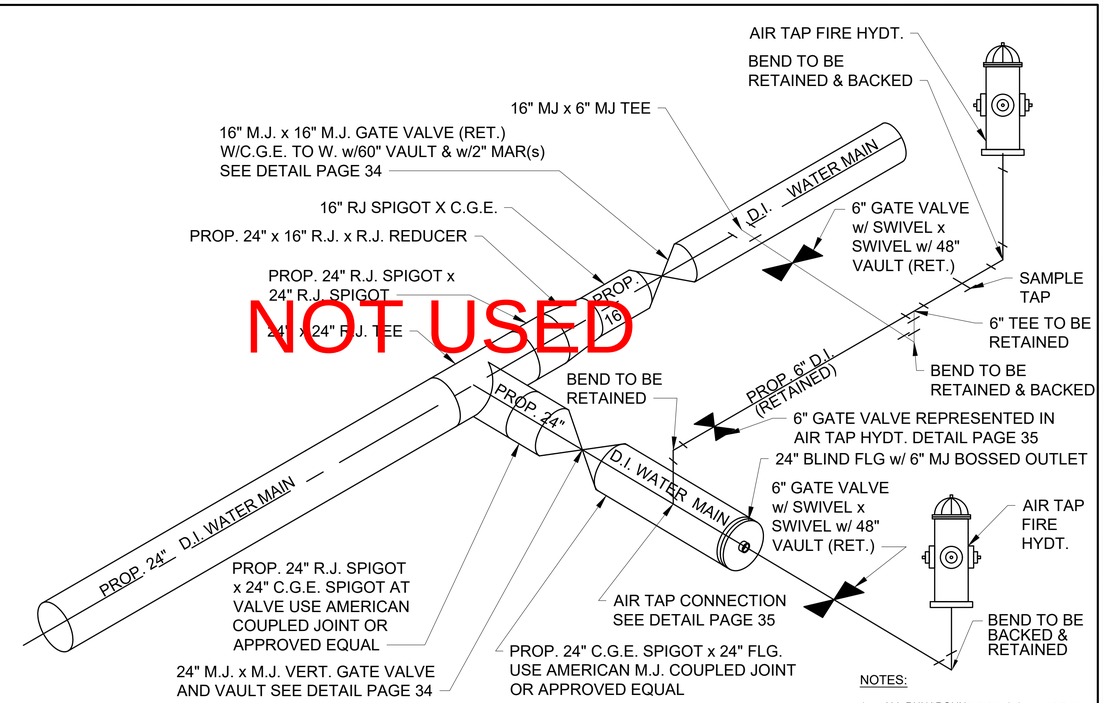

NOTES:

1. ALL RUNAROUND PIPING SHALL BE 6" D.I. CL 52.
2. ALL 6" D.I. PIPE AND FITTINGS TO BE SECURED WITH WEDGE ACTION D.I. RETAINER GLANDS.

AIR TAP HYDT. RUN-AROUND DUCTILE IRON

NO SCALE

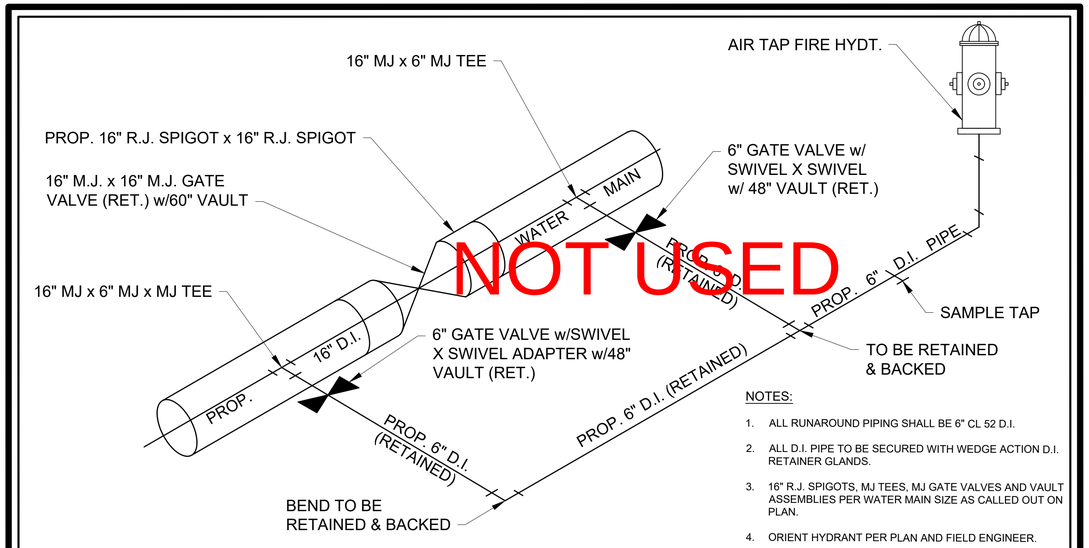

NOTES:

1. ALL RUNAROUND PIPING SHALL BE 6" CL 52 D.I.
2. ALL D.I. PIPE TO BE SECURED WITH WEDGE ACTION D.I. RETAINER GLANDS.
3. 16" R.J. SPIGOTS, MJ TEES, MJ GATE VALVES AND VAULT ASSEMBLIES PER WATER MAIN SIZE AS CALLED OUT ON PLAN.
4. ORIENT HYDRANT PER PLAN AND FIELD ENGINEER.

16" RUN-AROUND DUCTILE IRON

NO SCALE STA: 701+10

REVISION NOTICE
REVISED 11-21-2023
DESTROY OLD PRINTS
NATURE OF REVISIONS REMOVE PH. B FROM SET, MODIFY CONNECTIONS FOR PH. A AND C
REVISION AFFECTS EST.: YES ☒ NO ☐
REVISION AFFECTS MAT'L.: YES ☒ NO ☐
REVISION AFFECTS PROPERTY: YES ☐ NO ☒
REVISED BY AMO CHKD. BY MM
CHKD. BY ENGR. MRK
APPD. SR. DESIGN ENGR. _____

PROFESSIONAL CIVIL ENGINEER
MITCHELL R. KLEIN
E-17008
STATE OF NEBRASKA
11-21-2023

METROPOLITAN UTILITIES DISTRICT
OMAHA, NEBRASKA

SOUTHEAST BELLEVUE WATER MAIN EXTENSIONS

WP1871

HDR ENGINEERING, INC	INITIALS:	DATE:	MUD	INITIAL:	DATE:
BASEMAP DRAWN:	AMO	10-2022	CKD. BY SR. CAD TECH:	JCK	6-19-23
PROPOSED DRAWN:	AMO	6-2023	CKD. BY DESIGNER:	EHW	6-22-23
DESIGN:	MRK	6-29-2023	CKD. BY PLANT:	TLM	6-21-23
QA/QC:	CAC	6-29-2023	CKD. BY CORROSION:	LMW	6-20-23
APPROVED:	MRK	6-29-2023	CKD. BY SR. DESIGN ENGINEER (W):	RMT	6-26-23
			PAGE NO.	31 OF 37	

c:\pwworking\central01\d2892775\i00C503.dwg $DATE$ $TIME$

811 Know what's below. Call before you dig. 1-800-331-5666

HDR

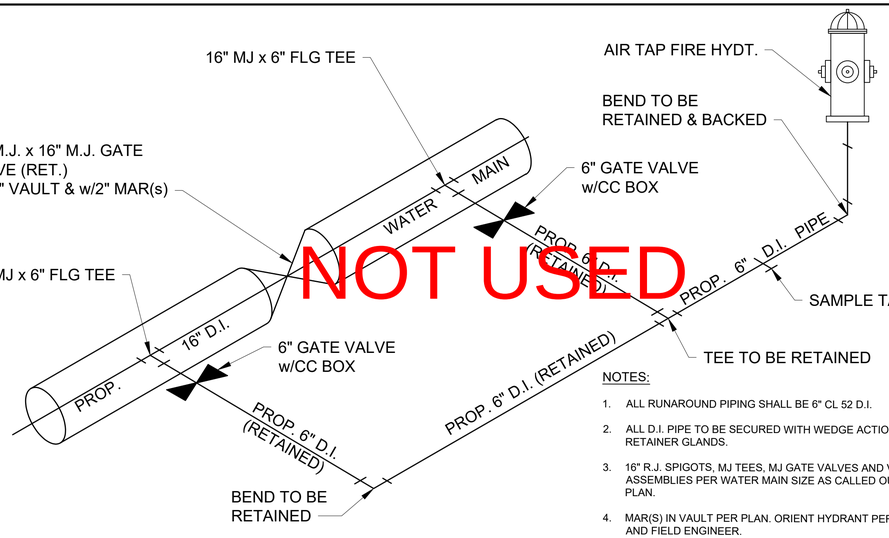

NOT USED

NOTES:

1. ALL RUNAROUND PIPING SHALL BE 6" CL 52 D.I.
2. ALL D.I. PIPE TO BE SECURED WITH WEDGE ACTION D.I. RETAINER GLANDS.
3. 16" R.J. SPIGOTS, MJ TEES, MJ GATE VALVES AND VAULT ASSEMBLIES PER WATER MAIN SIZE AS CALLED OUT ON PLAN.
4. MAR(S) IN VAULT PER PLAN. ORIENT HYDRANT PER PLAN AND FIELD ENGINEER.

16" AIR TAP/ DRAIN HYDT. RUN-AROUND DUCTILE IRON

NO SCALE

STA: 272+94; 287+58; 302+29; 335+00; 351+07; 0+19

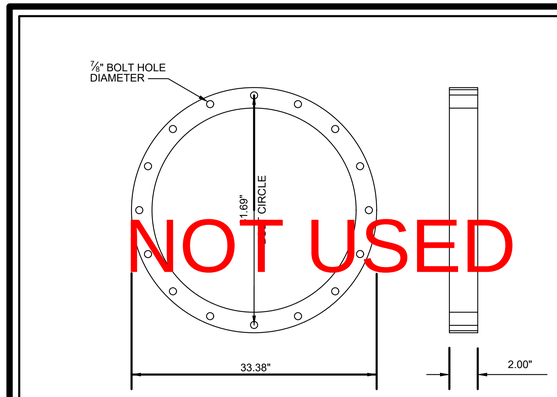

(REQUIRES 16 - ¾" DIA. x 6'-6" LONG TIE RODS)

NOT USED

NOTES:

1. COUPLING GLAND SHALL BE DUCTILE IRON.
2. TIE RODS SHALL BE ALLOY STEEL RODS ACCEPTABLE TO AWWA AND PROVIDE A COUPLING GLAND END ASSEMBLY RATED AT 250 PSI WATER WORKING PRESSURE. THE RODS SHALL BE THREADED 8" ON EACH END.

24" D.I. COUPLING GLAND DETAIL

NO SCALE

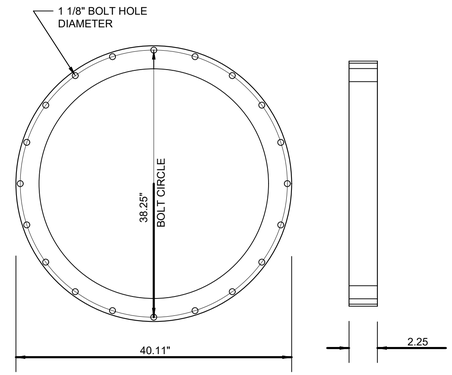

(REQUIRES 20 -1" DIA. x 10'-0" LONG TIE RODS)

NOTES:

1. COUPLING GLAND SHALL BE DUCTILE IRON.
2. TIE RODS SHALL BE ALLOY STEEL RODS ACCEPTABLE TO AWWA AND PROVIDE A COUPLING GLAND END ASSEMBLY RATED AT 250 PSI WATER WORKING PRESSURE. THE RODS SHALL BE THREADED 8" ON EACH END.

30" D.I. COUPLING GLAND DETAIL

NO SCALE

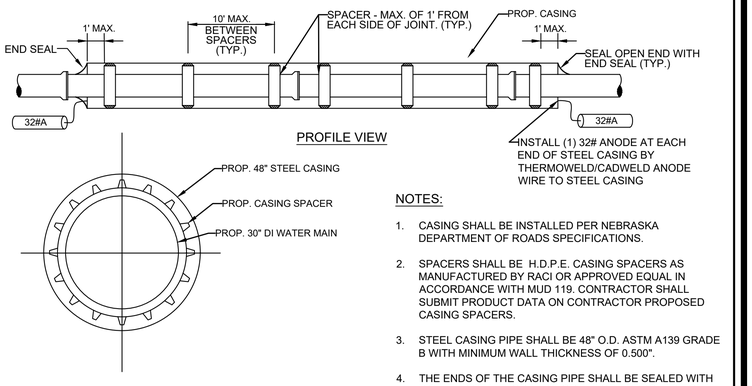

NOTES:

1. CASING SHALL BE INSTALLED PER NEBRASKA DEPARTMENT OF ROADS SPECIFICATIONS.
2. SPACERS SHALL BE H.D.P.E. CASING SPACERS AS MANUFACTURED BY RACI OR APPROVED EQUAL IN ACCORDANCE WITH MUD 119. CONTRACTOR SHALL SUBMIT PRODUCT DATA ON CONTRACTOR PROPOSED CASING SPACERS.
3. STEEL CASING PIPE SHALL BE 48" O.D. ASTM A139 GRADE B WITH MINIMUM WALL THICKNESS OF 0.500".
4. THE ENDS OF THE CASING PIPE SHALL BE SEALED WITH P.S.I. END SEAL MODEL "C" OR "W" OR APPROVED EQUAL. CONTRACTOR SHALL SUBMIT PRODUCT DATA ON CONTRACTOR PROPOSED END SEALS.
5. CASING SPACERS AND END SEALS SHALL BE INSTALLED PER MANUFACTURER'S SPECIFICATIONS.
6. CARRIER PIPE SHALL BE CENTERED IN CASING.
7. ANODE LEAD SHALL BE WELDED TO STEEL CASING PER MUD STANDARD C.S. 8.3.3.

48" CASING DETAIL

NO SCALE

STA: 109+07; 121+07; 128+27; 131+96; 137+49; 141+61; 145+45

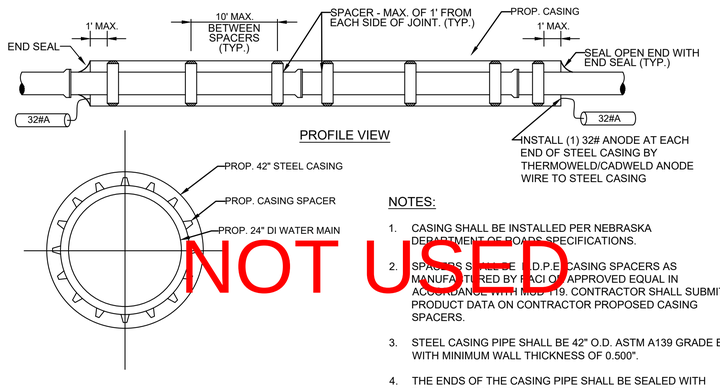

NOT USED

NOTES:

1. CASING SHALL BE INSTALLED PER NEBRASKA DEPARTMENT OF ROADS SPECIFICATIONS.
2. SPACERS SHALL BE H.D.P.E. CASING SPACERS AS MANUFACTURED BY RACI OR APPROVED EQUAL IN ACCORDANCE WITH MUD 119. CONTRACTOR SHALL SUBMIT PRODUCT DATA ON CONTRACTOR PROPOSED CASING SPACERS.
3. STEEL CASING PIPE SHALL BE 42" O.D. ASTM A139 GRADE B WITH MINIMUM WALL THICKNESS OF 0.500".
4. THE ENDS OF THE CASING PIPE SHALL BE SEALED WITH P.S.I. END SEAL MODEL "C" OR "W" OR APPROVED EQUAL. CONTRACTOR SHALL SUBMIT PRODUCT DATA ON CONTRACTOR PROPOSED END SEALS.
5. CASING SPACERS AND END SEALS SHALL BE INSTALLED PER MANUFACTURER'S SPECIFICATIONS.
6. CARRIER PIPE SHALL BE CENTERED IN CASING.
7. ANODE LEAD SHALL BE WELDED TO STEEL CASING PER MUD STANDARD C.S. 8.3.3.

42" CASING DETAIL

NO SCALE

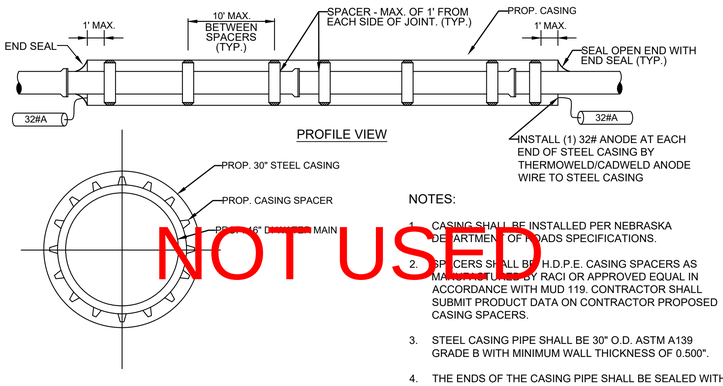

NOT USED

NOTES:

1. CASING SHALL BE INSTALLED PER NEBRASKA DEPARTMENT OF ROADS SPECIFICATIONS.
2. SPACERS SHALL BE H.D.P.E. CASING SPACERS AS MANUFACTURED BY RACI OR APPROVED EQUAL IN ACCORDANCE WITH MUD 119. CONTRACTOR SHALL SUBMIT PRODUCT DATA ON CONTRACTOR PROPOSED CASING SPACERS.
3. STEEL CASING PIPE SHALL BE 30" O.D. ASTM A139 GRADE B WITH MINIMUM WALL THICKNESS OF 0.500".
4. THE ENDS OF THE CASING PIPE SHALL BE SEALED WITH P.S.I. END SEAL MODEL "C" OR "W" OR APPROVED EQUAL. CONTRACTOR SHALL SUBMIT PRODUCT DATA ON CONTRACTOR PROPOSED END SEALS.
5. CASING SPACERS AND END SEALS SHALL BE INSTALLED PER MANUFACTURER'S SPECIFICATIONS.
6. CARRIER PIPE SHALL BE CENTERED IN CASING.
7. ANODE LEAD SHALL BE WELDED TO STEEL CASING PER MUD STANDARD C.S. 8.3.3.

30" CASING DETAIL

NO SCALE

STA: 236+02; 247+71; 270+99; 352+14; 358+85; 365+39; 373+42; 700+08

REVISION NOTICE	
1	REVISED 11-21-2023
	DESTROY OLD PRINTS
	NATURE OF REVISIONS REMOVE PH. B FROM SET, MODIFY CONNECTIONS FOR PH. A AND C
	REVISION AFFECTS EST.: YES ☒ NO ☐
	REVISION AFFECTS MAT'L.: YES ☒ NO ☐
	REVISION AFFECTS PROPERTY: YES ☐ NO ☒
	REVISED BY AMO CHKD. BY MM
	CHKD. BY ENGR. MRK
	APPD. SR. DESIGN ENGR.

REVISION NOTICE	
2	REVISED 10-23-2023
	DESTROY OLD PRINTS
	NATURE OF REVISIONS ALIGNMENT AT RAIL ROAD CROSSING, DETAIL STATION UPDATE
	REVISION AFFECTS EST.: YES ☒ NO ☐
	REVISION AFFECTS MAT'L.: YES ☒ NO ☐
	REVISION AFFECTS PROPERTY: YES ☒ NO ☐
	REVISED BY AMO CHKD. BY MM
	CHKD. BY ENGR. MRK
	APPD. SR. DESIGN ENGR.

PROFESSIONAL CIVIL ENGINEER
MITCHELL R. KLEIN
E-17008
STATE OF NEBRASKA
11-21-2023

METROPOLITAN UTILITIES DISTRICT OMAHA, NEBRASKA	HDR ENGINEERING, INC	INITIALS:	DATE:	MUD	INITIAL: DATE:
	BASEMAP DRAWN:	AMO	10-2022	CKD, BY SR. CAD TECH:	JCK 6-19-23
	PROPOSED DRAWN:	AMO	6-2023	CKD. BY DESIGNER:	EHW 6-22-23
SOUTHEAST BELLEVUE WATER MAIN EXTENSIONS	DESIGN:	MRK	6-29-2023	CKD. BY PLANT:	TLM 6-21-23
	QA/QC:	CAC	6-29-2023	CKD. BY CORROSION:	LMW 6-20-23
WP1871	APPROVED:	MRK	6-29-2023	CKD. BY SR. DESIGN ENGINEER (W):	RMT 6-26-23
				PAGE NO.	32 OF 37

c:\pwworking\central01\d2892775\i00C504.dwg $DATE$ $TIME$

811 Know what's below. Call before you dig. 1-800-331-5666

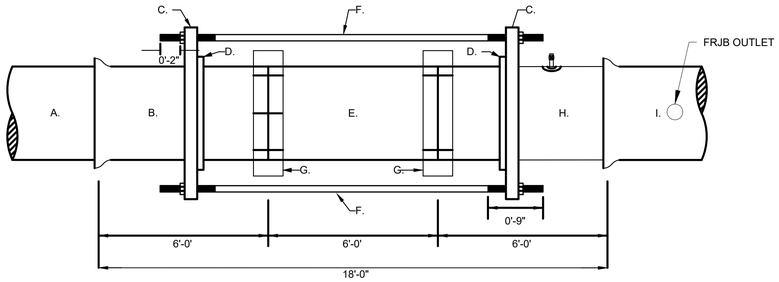

PROPOSED MATERIALS:

A. PROP. 30" DUCTILE IRON R.J. PIPE

B. 30" x 6'-0" LONG REST. JOINT BELL x P.E. DUCTILE IRON PIPE w/ RETAINER RING INSTALLED w/ COUPLING GLAND.

C. D.I. COUPLING GLAND - SEE 30" D.I. COUPLING GLAND DETAIL - PAGE 32

D. FACTORY WELDED RETAINER RING PER MANUFACTURER'S SPECIFICATIONS

E. 30" x 6'-0" (LL) CHLORINE TUBE FURNISHED BY M.U.D., INSTALLED BY CONTRACTOR, OR P.E. x P.E. D.I. SPOOL PIECE

F. TIE RODS PER SPECIFICATIONS SEE 30" D.I. COUPLING GLAND DETAIL - THIS PAGE

G. MECHANICAL COUPLING (FURNISHED w/ 2 SETS OF GASKETS)

H. 30" x 6'-0" LONG REST. JOINT P.E. x P.E. DUCTILE IRON PIPE w/ RETAINER RING INSTALLED w/ COUPLING GLAND & SAMPLE TAP

I. 30" DUCTILE IRON REST. JOINT PIPE

PROCEDURE FOR INSTALLATION:

1. INSTALL A. THROUGH I.

PROCEDURE FOR CONNECTION:

1. INSTALL 30" WATER MAIN, PRESSURE TEST AND CHLORINATE.

2. WHEN NEW MAIN IS READY TO BE PUT INTO SERVICE, AT DIRECTION OF FIELD ENGINEER, REMOVE CHLORINE TUBE AND REPLACE w/ P.E. x P.E. DUCTILE IRON PIECE - INSTALL NEW GASKETS w/ MECHANICAL COUPLINGS AND HAND CHLORINATE ALL PIPE AT CONNECTION.

PRIME & WRAP COUPLING PER M.U.D. C.S. 8.5.2.

REPLACE ALL TIE-RODS. APPLY A GENEROUS AMOUNT OF PRIMER TO THE TIE-ROD.

WRAP THE TIE-RODS & RETAINING FLANGE ASSEMBLY w/ POLYETHYLENE SHEATHING PER MUD C.S. 1.12.1. CONTRACTOR SHALL OVERLAP POLYETHYLENE 12 INCHES ONTO ADJACENT D.I. PIPE

NOTES:

HAND CHLORINATE ALL PIPE AT CONNECTION.

30" CHLORINE TUBE INSTALLATION & CONNECTION DETAIL

NO SCALE STA: 100+25

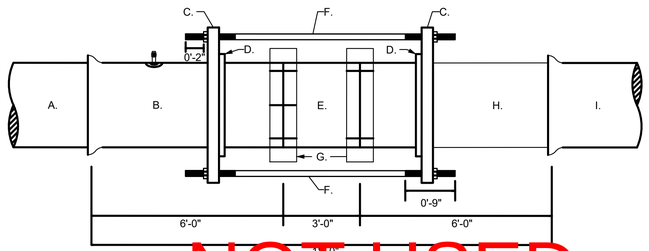

NOT USED

PROPOSED MATERIALS:

A. PROP. 24" DUCTILE IRON P.E. R.J. PIPE

B. 24" x 7'-6" LONG REST. JOINT BELL x P.E. DUCTILE IRON PIPE w/ RETAINER RING INSTALLED w/ COUPLING GLAND & SAMPLE TAP.

C. D.I. COUPLING GLAND - SEE 24" D.I. COUPLING GLAND DETAIL - THIS PAGE

D. FACTORY WELDED RETAINER RING PER MANUFACTURER'S SPECIFICATIONS

E. 24" x 3'-0" (LL) CHLORINE TUBE FURNISHED BY M.U.D., INSTALLED BY CONTRACTOR, OR P.E. x P.E. D.I. SPOOL PIECE

F. TIE RODS PER SPECIFICATIONS SEE 24" D.I. COUPLING GLAND DETAIL - THIS PAGE

G. MECHANICAL COUPLING (FURNISHED w/ 2 SETS OF GASKETS)

H. 24" x 6'-0" LONG REST. JOINT P.E. x P.E. DUCTILE IRON PIPE w/ RETAINER RING INSTALLED w/ COUPLING GLAND.

I. 24" DUCTILE IRON REST. JOINT PIPE

PROCEDURE FOR INSTALLATION:

1. INSTALL A. THROUGH I.

PROCEDURE FOR CONNECTION:

1. INSTALL 24" WATER MAIN, PRESSURE TEST AND CHLORINATE.

2. WHEN NEW MAIN IS READY TO BE PUT INTO SERVICE, AT DIRECTION OF FIELD ENGINEER, REMOVE CHLORINE TUBE AND REPLACE w/ P.E. x P.E. DUCTILE IRON PIECE - INSTALL NEW GASKETS w/ MECHANICAL COUPLINGS AND HAND CHLORINATE ALL PIPE AT CONNECTION.

PRIME & WRAP COUPLING PER M.U.D. C.S. 8.5.2.

REPLACE ALL TIE-RODS. APPLY A GENEROUS AMOUNT OF PRIMER TO THE TIE-ROD.

WRAP THE TIE-RODS & RETAINING FLANGE ASSEMBLY w/ POLYETHYLENE SHEATHING PER MUD C.S. 1.12.1. CONTRACTOR SHALL OVERLAP POLYETHYLENE 12 INCHES ONTO ADJACENT D.I. PIPE

NOTES:

1. HAND CHLORINATE ALL PIPE AT CONNECTION.

24" CHLORINE TUBE INSTALLATION & CONNECTION DETAIL

NO SCALE

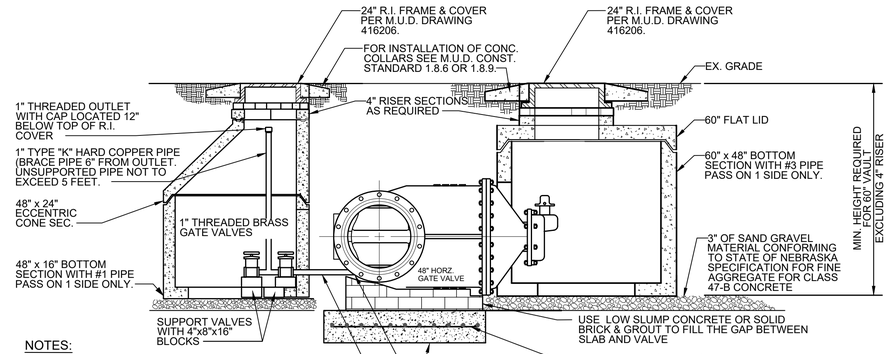

NOTES:

1. SEE CONST STAND 10.4.0 FOR WEIGHTS AND ITEM NUMBERS FOR PRECAST SECTIONS.
2. INSTALL VAULT ACCORING TO REQUIREMENTS OF CONSTRUCTION STANDARD 1.8.1.
3. FILL ALL LIFT HOLES W/ CEMENT GROUT.
4. SEAL ALL JOINTS WITH APPROVED JOINT SEAL (SEE MUD 119).
5. THE VALVE AND/OR AIR TAP SHALL BE OPERATIONAL FROM ABOVE AND AT LEAST A WITH A KEY. PORTION OF THE STEPS SHALL BE VISIBLE THROUGH THE VAULT OPENING.
6. 48" PRECAST VAULT SHALL BE PLACED SO BOTH 1" VALVES MAY BE OPERATED FROM ABOVE GROUND WITH A KEY.
7. WRAP DI PIPE AND VALVE WITH POLYETHYLENE PER M.U.D. CONSTRUCTION STANDARD 1.12.1. WRAP ALL PIPE, VALVES AND APPURTENANCES IN VAULTS WITH INSULATION.
8. MAINTAIN CATHODIC PROTECTION OF STEEL PIPE ACROSS VALVE. INSTALL 2- 8 GAUGE WIRES, BONDED ACROSS DI VALVE FROM STEEL TO STEEL ON EITHER SIDE OF THE DI VALVE.

NOT USED

48" HORZ. GATE VALVE w/OPERATOR IN 60" VAULT AND FLUSH PORT IN 48" VAULT DETAIL "A"

NO SCALE

REVISION NOTICE
REVISED 11-21-2023
DESTROY OLD PRINTS
NATURE OF REVISIONS REMOVE PH. B FROM SET, MODIFY CONNECTIONS FOR PH. A AND C
REVISION AFFECTS EST.: YES ☒ NO ☐
REVISION AFFECTS MATL.: YES ☒ NO ☐
REVISION AFFECTS PROPERTY: YES ☐ NO ☒
REVISED BY AMO CHKD. BY MM
CHKD. BY ENGR. MRK
APPD. SR. DESIGN ENGR. _____

PROFESSIONAL CIVIL ENGINEER ★ MITCHELL R. KLEIN E-17008 ★ STATE OF NEBRASKA
11-21-2023

METROPOLITAN UTILITIES DISTRICT
OMAHA, NEBRASKA

SOUTHEAST BELLEVUE WATER MAIN EXTENSIONS

WP1871

HDR ENGINEERING, INC	INITIALS:	DATE:	MUD	INITIAL:	DATE:
BASEMAP DRAWN:	AMO	10-2022	CKD, BY SR. CAD TECH:	JCK	6-19-23
PROPOSED DRAWN:	AMO	6-2023	CKD, BY DESIGNER:	EHW	6-22-23
DESIGN:	MRK	6-29-2023	CKD, BY PLANT:	TLM	6-21-23
QA/QC:	CAC	6-29-2023	CKD, BY CORROSION:	LMW	6-20-23
APPROVED:	MRK	6-29-2023	CKD, BY SR. DESIGN ENGINEER (W):	RMT	6-26-23
			PAGE NO.	33 OF 37	

c:\pwworking\central01\d2892775\00C513.dwg $DATE$ $TIME$

811 Know what's below. Call before you dig. 1-800-331-5666

HDR

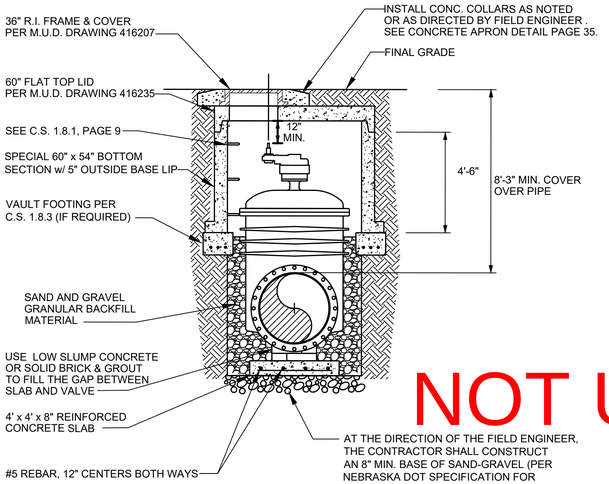

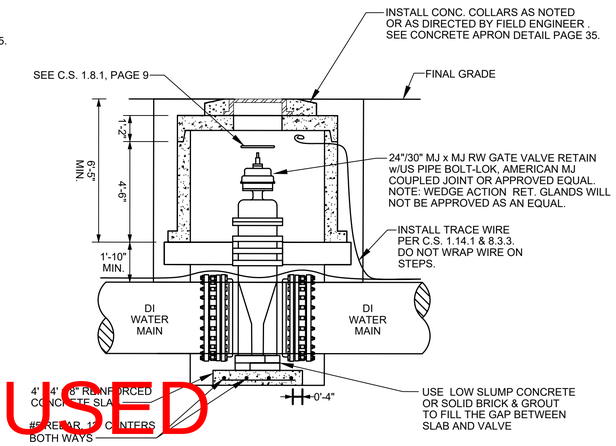

NOT USED

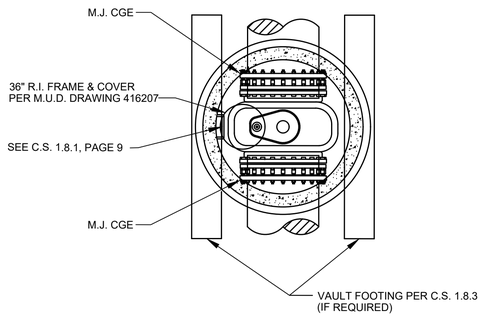

NOTES:

1. PRECAST VAULT SHALL BE PLACED SO VALVE MAY BE OPERATED FROM ABOVE GROUND WITH KEY w/ 36" COVER REMOVED.
2. ALL STEPS IN PRECAST VAULT SHALL BE PLACED IN LINE.
3. ENCASE ALL PIPE AND FITTINGS w/ DOUBLE V-BI0 POLYETHYLENE WRAP PER M.U.D. CONSTRUCTION STANDARD 1.12.1.
4. IF DEPTH FROM ROUND IRON COVER TO TOP OF SQUARE NUT IS 6' OR GREATER, PROVIDE LENGTH OF KEY EXTENSION REQUIRED TO WATER DISTRIBUTION SO THEY CAN HAVE EXTENSIONS MADE PRIOR TO CHLORINATION AND PRESSURE TESTING.
5. FILL ALL LIFT HOLES WITH GROUT.
6. SEAL ALL JOINTS WITH APPROVED JOINT SEALER.
7. INSTALL VAULT ACCORDING TO REQUIREMENTS OF CONSTRUCTION STANDARD 1.8.1.
8. GRANULAR BACKFILL SHALL BE PLACED INSIDE OF VAULT TO 3" BELOW THE THE VALVE COVER BOLTS.
9. INSTALL TRACE WIRE PER CONSTRUCTION STANDARD 1.14.1 & 8.3.3.

24" & 30" VERTICAL MJ GATE VALVE & VAULT DETAIL

NO SCALE STA. 131+47

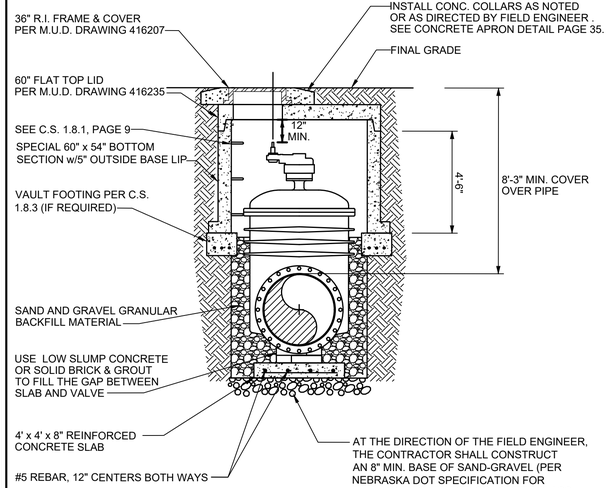

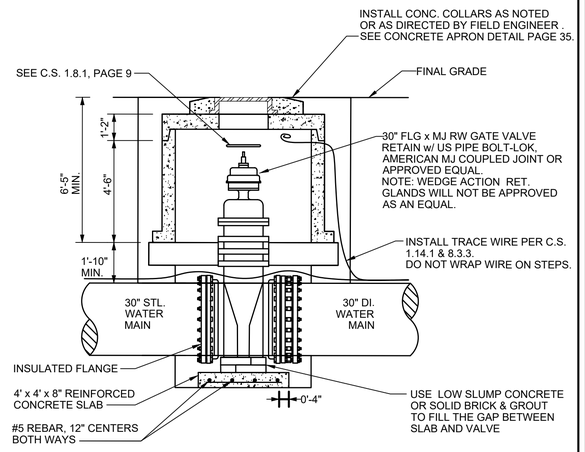

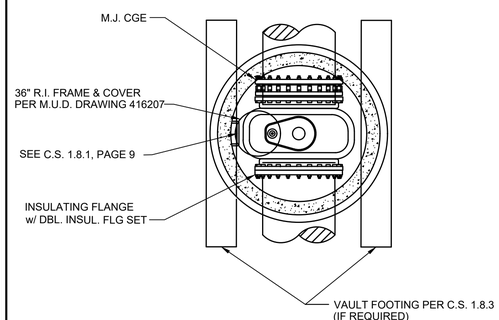

NOTES:

1. PRECAST VAULT SHALL BE PLACED SO VALVE MAY BE OPERATED FROM ABOVE GROUND WITH KEY W/ 36" COVER REMOVED.
2. ALL STEPS IN PRECAST VAULT SHALL BE PLACED IN LINE.
3. ENCASE ALL PIPE AND FITTINGS W/ DOUBLE V-BI0 POLYETHYLENE WRAP PER M.U.D. CONSTRUCTION STANDARD 1.12.1
4. IF DEPTH FROM ROUND IRON COVER TO TOP OF SQUARE NUT IS 6' OR GREATER, PROVIDE LENGTH OF KEY EXTENSION REQUIRED TO WATER DISTRIBUTION SO THEY CAN HAVE EXTENSIONS MADE PRIOR TO CHLORINATION AND PRESSURE TESTING.
5. FILL ALL LIFT HOLES WITH GROUT.
6. SEAL ALL JOINTS WITH APPROVED JOINT SEALER.
7. INSTALL VAULT ACCORDING TO REQUIREMENTS OF CONSTRUCTION STANDARD 1.8.1.
8. GRANULAR BACKFILL SHALL BE PLACED INSIDE OF VAULT TO 3" BELOW THE THE VALVE COVER BOLTS.
9. INSTALL TRACE WIRE PER CONSTRUCTION STANDARD 1.14.1 & 8.3.3.
10. M.U.D. CORROSION ENGINEER SHALL VERIFY INSULATING FLANGE SET PRIOR TO BACKFILLING.

30" VERTICAL MJ GATE VALVE & VAULT DETAIL

NO SCALE STA. 100+08

REVISION NOTICE
REVISED 11-21-2023
DESTROY OLD PRINTS
NATURE OF REVISIONS REMOVE PH. B FROM SET, MODIFY CONNECTIONS FOR PH. A AND C
REVISION AFFECTS EST.: YES ☒ NO ☐
REVISION AFFECTS MAT'L.: YES ☒ NO ☐
REVISION AFFECTS PROPERTY: YES ☐ NO ☒
REVISED BY AMO CHKD. BY MM
CHKD. BY ENGR. MRK
APPD. SR. DESIGN ENGR. _____

PROFESSIONAL CIVIL ENGINEER
MITCHELL R. KLEIN
E-12008
STATE OF NEBRASKA
11-21-2023

METROPOLITAN UTILITIES DISTRICT OMAHA, NEBRASKA	HDR ENGINEERING, INC	INITIALS:	DATE:	MUD	INITIAL: DATE:
	BASEMAP DRAWN:	AMO	10-2022	CKD, BY SR, CAD TECH:	JCK 6-19-23
	PROPOSED DRAWN:	AMO	6-2023	CKD, BY DESIGNER:	EHW 6-22-23
SOUTHEAST BELLEVUE WATER MAIN EXTENSIONS	DESIGN:	MRK	6-29-2023	CKD, BY PLANT:	TLM 6-21-23
	QA/QC:	CAC	6-29-2023	CKD, BY CORROSION:	LMW 6-20-23
WP1871	APPROVED:	MRK	6-29-2023	CKD, BY SR. DESIGN ENGINEER (W):	RMT 6-26-23
				PAGE NO.	34 OF 37

c:\pwworking\central01\d2892775\i00C508.dwg $DATE$ $TIME$

811 Know what's below. Call before you dig. 1-800-331-5666

HDR

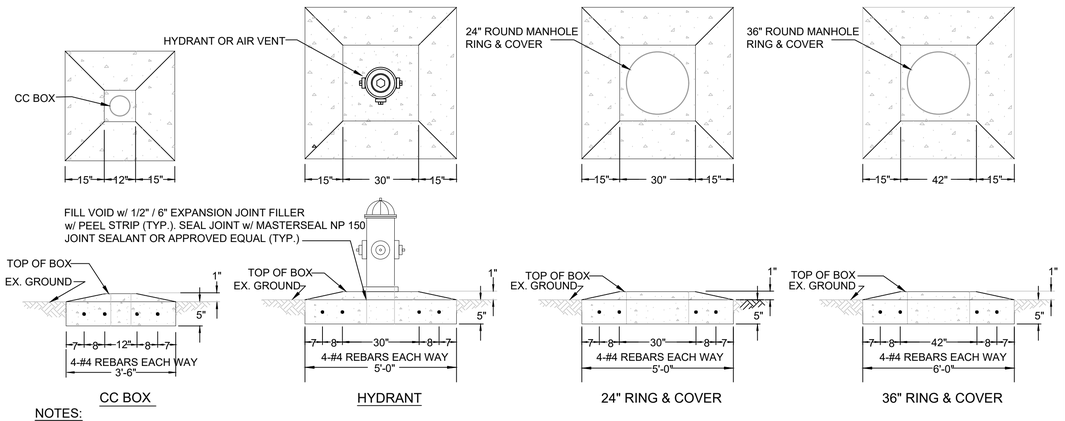

NOTES:

1. ALL REBAR SHALL BE ASTM A-615 GRADE 60, DEFORMED.
2. CONCRETE SHALL BE 4000 P.S.I. COMPRESSIVE STRENGTH.
3. CONFIRM APRON IS REQUIRED WITH FIELD ENGINEER BEFORE CONST.

CONC. APRON DETAIL

NO SCALE

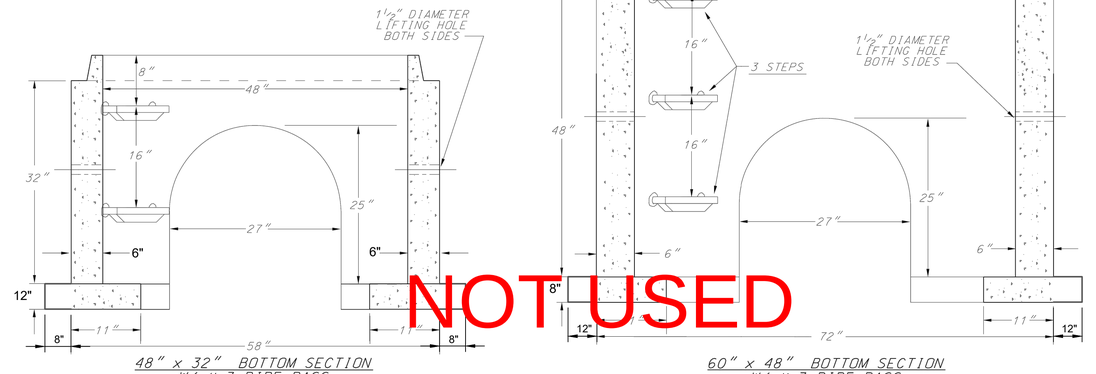

48" x 32" BOTTOM SECTION W/ # 3 PIPE PASS 19-100-04

NOTES:

1. 48" MANHOLE WALLS SHALL BE 6" THICK. BASE 12" THICK. AND BASE WINGS EXTEND 8" BEYOND DIAMETER OF STRUCTURE.
2. REMAINDER OF MANHOLE SHALL BE BUILT PER MUD STANDARD 48" PRECAST MANHOLE SECTIONS DRAWING 4165235.

60" x 48" BOTTOM SECTION W/ # 3 PIPE PASS 19-101-03

NOTES:

1. 60" MANHOLE BASE 8" THICK. AND BASE WINGS EXTEND 12" BEYOND DIAMETER OF STRUCTURE.
2. REMAINDER OF MANHOLE SHALL BE BUILT PER MUD STANDARD 60" PRECAST MANHOLE SECTIONS DRAWING 4165235.

NOT USED

48" & 60" MANHOLE NEAR LEVEE DETAIL

NO SCALE — STA 10+76, 4.6' RT; STA 10+94; STA 10+97, 4.3' LT

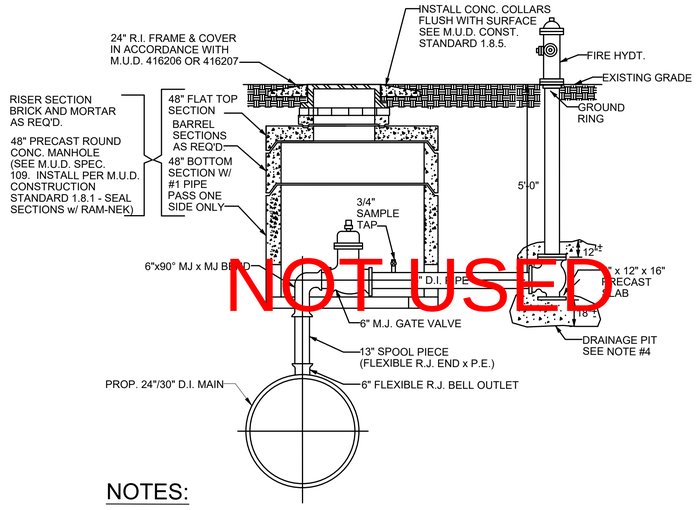

NOT USED

NOTES:

1. VAULT SHALL BE PLACED SO VALVE MAY BE OPERATED FROM ABOVE GROUND WITH KEY.
2. ALL STEPS IN VAULT SHALL BE PLACED IN LINE.
3. ALL JOINTS SHALL BE M.J. AND ARE TO BE SECURED w/ WEDGE ACTION D.I. RETAINER GLANDS, UNLESS NOTED OTHERWISE.
4. DRAINAGE PIT: APPROX. 1 cu. yd. OF DRAINAGE ROCK (PER CONST. STANDARD 3.0.1.) COVER ROCK w/ TAR PAPER OR POLYETHYLENE BEFORE BACKFILLING.
5. ENCASE ALL D.I. PIPE AND FITTINGS w/ POLYETHYLENE WRAP. PER CONST. STANDARD 1.12.1.

STANDARD AIR TAP HYDT. DETAIL

NO SCALE — STA: 114+84; 131+60; 196+21; 199+98 RT 10'; 200+28; 10+76

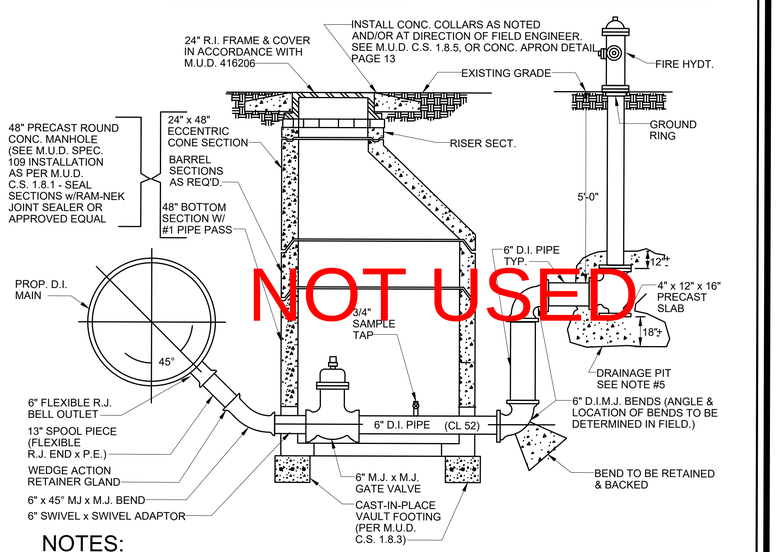

NOT USED

NOTES:

1. PRECAST VAULT SHALL BE PLACED SO VALVE MAY BE OPERATED FROM ABOVE GROUND WITH KEY.
2. ALL STEPS IN PRECAST VAULT SHALL BE PLACED IN LINE.
3. FILL ALL LIFT HOLES WITH GROUT.
4. ALL JOINTS SHALL BE M.J. AND ARE TO BE SECURED W/ D.I. WEDGE ACTION RETAINER GLANDS.
5. DRAINAGE PIT: APPROX. 1 cu. yd. OF DRAINAGE ROCK (PER C.S. 3.0.1.) COVER ROCK W/TAR PAPER OR POLYETHYLENE BEFORE BACKFILLING.
6. ENCASE ALL D.I. PIPE AND FITTINGS W/POLYETHYLENE WRAP. PER C.S. 1.12.1.
7. VAULT SHALL BE CENTERED ON FOOTINGS.

DRAIN HYDT. DETAIL DUCTILE IRON

NO SCALE — STA: 131+31; 149+53; 156+63

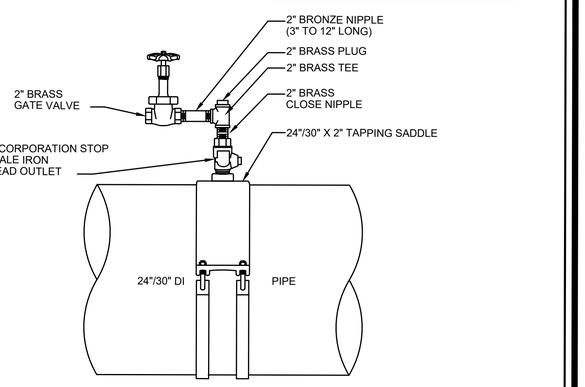

NOTES:

1. TAP SHALL BE MADE WITH A TAPPING MACHINE AND APPROPRIATE BIT FOR DRILLING AND TAPPING DI. HAND-HELD DRILLS SHALL NOT BE USED.
2. INSTALL IN ELEVATED VAULT PER C.S. 1.8.1 & 1.8.3

2" MANUAL AIR TAP ON 24" & 30" MAIN

NO SCALE — STA 114+99

PROFESSIONAL CIVIL ENGINEER
MITCHELL R. KLEIN
E-17008
STATE OF NEBRASKA

11-21-2023

REVISION NOTICE	
REVISED	11-21-2023
DESTROY OLD PRINTS	
NATURE OF REVISIONS	REMOVE PH. B FROM SET, MODIFY CONNECTIONS FOR PH. A AND C
REVISION AFFECTS EST.:	YES ☒ NO ☐
REVISION AFFECTS MAT'L.:	YES ☒ NO ☐
REVISION AFFECTS PROPERTY:	YES ☐ NO ☒
REVISED BY	AMO
CHKD. BY	MRK
CHKD. BY ENGR.	MM
APPD. SR. DESIGN ENGR.	

METROPOLITAN UTILITIES DISTRICT
OMAHA, NEBRASKA

SOUTHEAST BELLEVUE WATER MAIN EXTENSIONS

WP1871

HDR ENGINEERING, INC	INITIALS:	DATE:	MUD	INITIAL:	DATE:
BASEMAP DRAWN:	AMO	10-2022	CKD, BY SR, CAD TECH:	JCK	6-19-23
PROPOSED DRAWN:	AMO	6-2023	CKD, BY DESIGNER:	EHW	6-22-23
DESIGN:	MRK	6-29-2023	CKD, BY PLANT:	TLM	6-21-23
QA/QC:	CAC	6-29-2023	CKD, BY CORROSION:	LMW	6-20-23
APPROVED:	MRK	6-29-2023	CKD, BY SR. DESIGN ENGINEER (W):	RMT	6-26-23
			PAGE NO.	35 OF 37	

c:\pwworking\central01\d2892775\i00C505.dwg $DATE$ $TIME$

811 Know what's below. Call before you dig. 1-800-331-5666

HDR

REVISION NOTICE
REVISED 11-21-2023
DESTROY OLD PRINTS
NATURE OF REVISIONS REMOVE PH. B FROM SET, MODIFY CONNECTIONS FOR PH. A AND C
REVISION AFFECTS EST.: YES ☒ NO ☐
REVISION AFFECTS MAT'L.: YES ☒ NO ☐
REVISION AFFECTS PROPERTY: YES ☐ NO ☒
REVISED BY AMO CHKD. BY MM
CHKD. BY ENGR. MRK
APPD. SR. DESIGN ENGR. _____

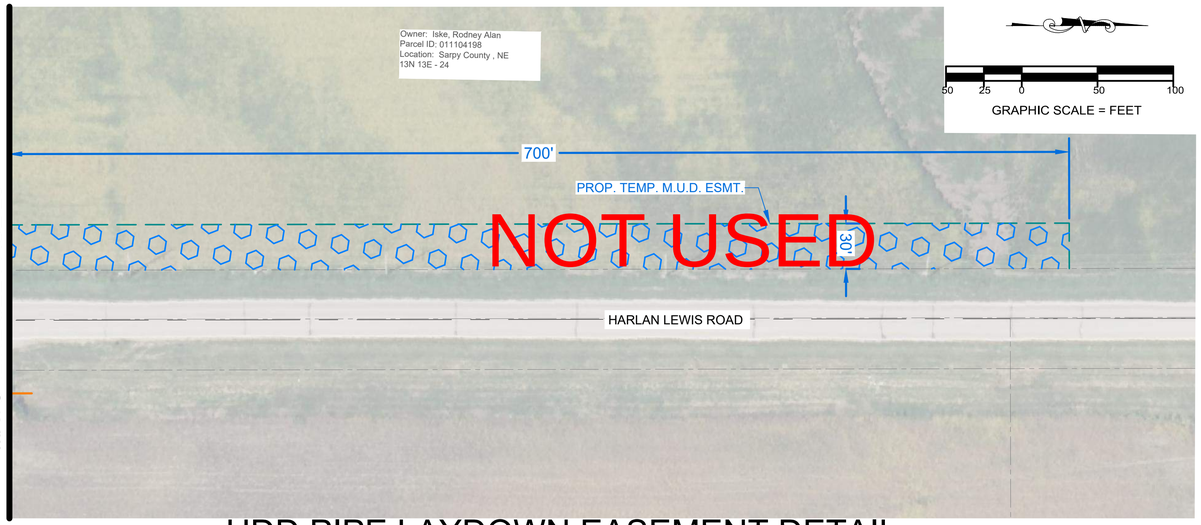

HDD PIPE LAYDOWN EASEMENT DETAIL
1" = 50'

NORMAL TRENCH & PIPE EMBEDMENT

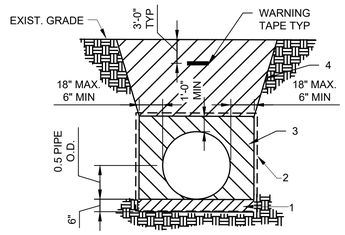

TRENCH & PIPE EMBEDMENT FOR POOR SOIL CONDITIONS
EMBEDMENT ACCORDING TO THIS DETAIL SHALL BE DONE ONLY AS DIRECTED BY ENGINEER.

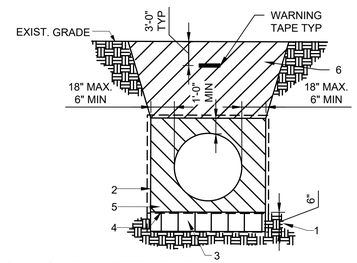

1. SAND AND GRAVEL GRANULAR BACKFILL MATERIAL CONFORMING TO NDOR SPECIFICATIONS FOR FINE AGGREGATE FOR CONCRETE CLASS 47B. COMPACTED TO MINIMUM 70% RELATIVE DENSITY, (ASTM D4253 & D4254).
2. MIRAFI - 500X GROUND STABILIZATION FABRIC OR APPROVED EQUAL CENTERED BENEATH PIPE AND LAID AGAINST UNDISTURBED SOIL ALONG WALLS OF EMBEDMENT AREA. MIRAFI FABRIC TO BE INCLUDED FROM STA 248+00 TO STA 376+10, STA 0+00 TO STA 0+96, AND STA 10+64 TO STA10+96.
3. SAND AND GRAVEL GRANULAR BACKFILL MATERIAL CONFORMING TO NDOR SPECIFICATIONS FOR FINE AGGREGATE FOR CONCRETE CLASS 47B. COMPACTED TO MINIMUM 70% RELATIVE DENSITY, (ASTM D2049).
4. BACKFILL OF JOB EXCAVATED MATERIAL FREE FROM DEBRIS, ORGANIC MATERIAL, STONES, FROZEN GROUND AND OTHER FOREIGN MATERIAL COMPACTED TO MINIMUM 95% OF STANDARD PROCTOR (ASTM D698) WITH MOISTURE CONTENT FROM OPTIMUM TO +4% OF OPTIMUM MOISTURE. MOISTURE. CONTRACTOR SHALL MANIPULATE MOISTURE CONTENT TO ACHIEVE SPECIFIED DENSITIES. ADD WATER TO MATERIAL DEFICIENT IN MOISTURE CONTENT. WHEN MOISTURE CONTENT IS EXCESSIVE, DRY THE MATERIAL BY MANIPULATION, AERATION OR BLENDING WITH OTHER MATERIAL AS APPROVED BY ENGINEER, AT NO ADDITIONAL COST TO THE DISTRICT.

CAUTION: IN NO CASE SHALL HEAVY LOADS AS DETERMINED BY THE ENGINEER BE ALLOWED TO OPERATE OVER THE PIPE UNTIL AT LEAST 3' OF COMPACTED BACKFILL HAS BEEN PLACED OVER THE PIPE.

1. OVERDIG FOR UNACCEPTABLE SUBGRADE ONLY AS DIRECTED BY ENGINEER. PAYMENT FOR OVER DIGGING WILL BE AS LISTED IN THE PROPOSAL SECTION OF THE SPECIFICATIONS.
2. 17.5' WIDE MIRAFI-500x GROUND STABILIZATION FABRIC OR APPROVED EQUAL CENTERED BENEATH PIPE AND LAID AGAINST UNDISTURBED SOIL ALONG WALLS OF EMBEDMENT AREA, ONLY AS DIRECTED BY ENGINEER.
3. DRY 1 1/2" CRUSHED RUN ROCK WASHED SHALL BE PLACED IN BOTTOM OF DITCH.
4. MIRAFI-500x GROUND STABILIZATION FABRIC OR APPROVED EQUAL BETWEEN THE ROCK AND SAND FOR ENTIRE WIDTH OF TRENCH.
5. SAND AND GRAVEL GRANULAR BACKFILL MATERIAL CONFORMING TO STATE OF NEBRASKA SPECIFICATIONS FOR FINE AGGREGATE FOR CONCRETE CLASS 47B. COMPACTED TO MINIMUM 70% RELATIVE DENSITY, (ASTM D4253 & D4254).
6. BACKFILL OF JOB EXCAVATED MATERIAL FREE FROM DEBRIS, ORGANIC MATERIAL, STONES, FROZEN GROUND AND OTHER FOREIGN MATERIAL COMPACTED TO MINIMUM 95% OF STANDARD PROCTOR (ASTM D698) WITH MOISTURE CONTENT FROM OPTIMUM TO +4% OF OPTIMUM MOISTURE. CONTRACTOR SHALL MANIPULATE MOISTURE CONTENT TO ACHIEVE SPECIFIED DENSITIES. ADD WATER TO MATERIAL DEFICIENT IN MOISTURE CONTENT. WHEN MOISTURE CONTENT IS EXCESSIVE, DRY THE MATERIAL BY MANIPULATION, AERATION OR BLENDING WITH OTHER MATERIAL AS APPROVED BY ENGINEER AT NO ADDITIONAL COST TO THE DISTRICT.

CAUTION: IN NO CASE SHALL HEAVY LOADS AS DETERMINED BY THE ENGINEER BE ALLOWED TO OPERATE OVER THE PIPE UNTIL AT LEAST 3' OF COMPACTED BACKFILL HAS BEEN PLACED OVER THE PIPE.

16", 24", 30", 48" & 60" WATER MAIN PIPE EMBEDMENT DETAILS
NO SCALE

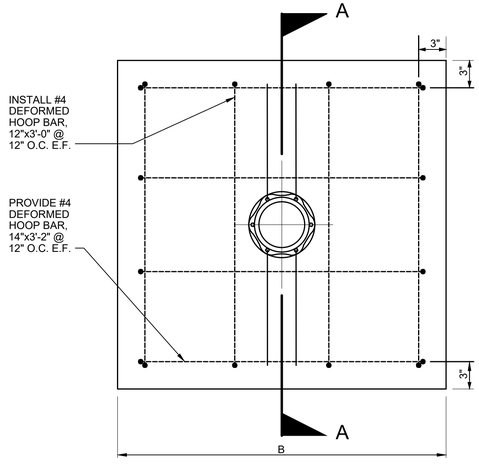

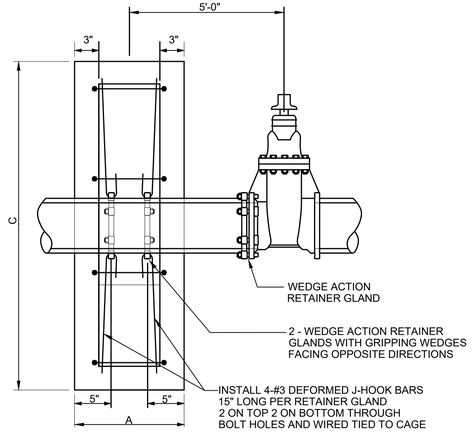

SECTION A-A VALVE

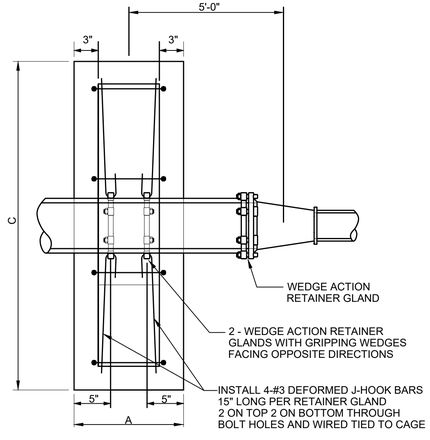

SECTION A-A REDUCER

NOTE:
1. ALL BARS SHALL BE WIRE TIED AT ALL CONNECTIONS.
2. 3" MIN. CONCRETE COV. ON ALL BARS.

A THRUST COLLAR SHALL BE INSTALLED 5' FROM EACH LINE VALVE OR REDUCER. TWO WEDGE ACTION RETAINER GLANDS SHALL BE EMBEDDED IN THE THRUST COLLAR, WITH THE GRIPPING WEDGES FACING OPPOSITE DIRECTIONS, TO PROVIDE THRUST RESTRAINT FROM EITHER DIRECTION. A SINGLE WEDGE ACTION RETAINER GLAND SHALL BE INSTALLED ON THE M.J. JOINT ON THE SIDE OF THE VALVE OR REDUCER NEAREST THE THRUST COLLAR.

WATER MAIN DIA.	CONC. COLLAR DIM.		
	A THICKNESS	B WIDTH	C HEIGHT
6" or 8"	1'-6"	3'-6"	3'-6"
12"	1'-6"	4'-0"	3'-6"

IN-LINE THRUST COLLAR
NO SCALE

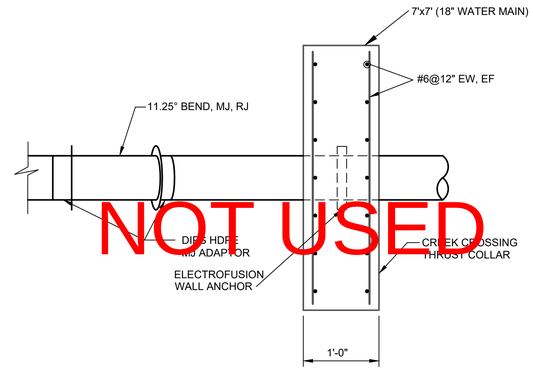

PLAN VIEW

CREEK CROSSING HDPE THRUST COLLAR
NO SCALE

STA 1+25; STA 10+50

PROFESSIONAL CIVIL ENGINEER
MITCHELL R. KLEIN
E-17008
STATE OF NEBRASKA
11-21-2023

METROPOLITAN UTILITIES DISTRICT OMAHA, NEBRASKA	HDR ENGINEERING, INC	INITIALS:	DATE:	MUD	INITIAL:	DATE:
	BASEMAP DRAWN:	AMO	10-2022	CKD, BY SR, CAD TECH:	JCK	6-19-23
	PROPOSED DRAWN:	AMO	6-2023	CKD, BY DESIGNER:	EHW	6-22-23
SOUTHEAST BELLEVUE WATER MAIN EXTENSIONS	DESIGN:	MRK	6-29-2023	CKD, BY PLANT:	TLM	6-21-23
	QA/QC:	CAC	6-29-2023	CKD, BY CORROSION:	LMW	6-20-23
WP1871	APPROVED:	MRK	6-29-2023	CKD, BY SR. DESIGN ENGINEER (W):	RMT	6-26-23
				PAGE NO.	36 OF 37	

c:\pwworking\central01\d2892775\i00C507.dwg $DATE$ $TIME$

811 Know what's below. Call before you dig. 1-800-331-5666

HDR

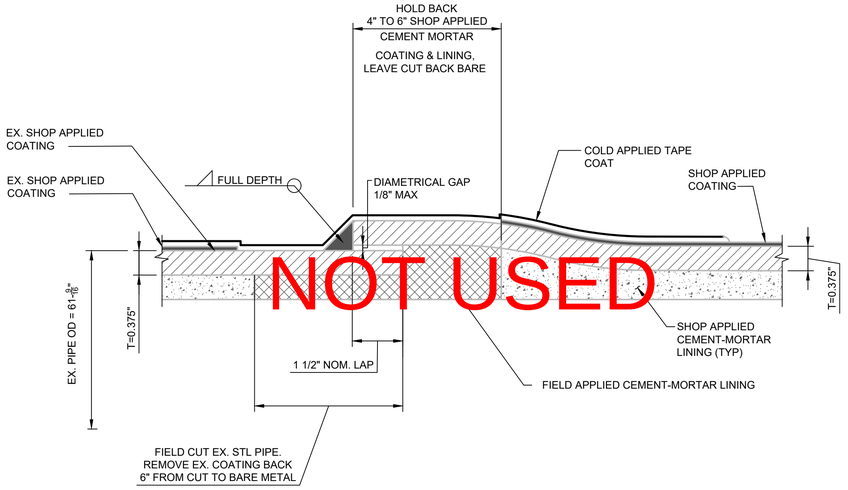

NOT USED

NOTES:

1. GRIND SPIRAL WELD ON PIPE BACK 6" ON THE BELL ID AND SPIGOT OD.
2. FIELD WELDING SHALL MEET REQUIREMENTS OF AWWA C206 AND AWS D1.1 SECTION 5.
3. GROUT THE INTERIOR GAP IN LINING BY FIELD APPLIED CEMENT MORTAR PER AWWA C602.
4. FIELD JOINTS SHALL BE CLEANED, PRIMED AND WRAPPED WITH TWO WRAPS OF TAPE WITH A 35 MIL THICKNESS EACH. ALL MATERIAL USED ON FIELD WRAPPED JOINTS SHALL BE IN ACCORDANCE WITH AWWA C209.

TYPICAL WELDED LAP JOINT DETAIL

NO SCALE

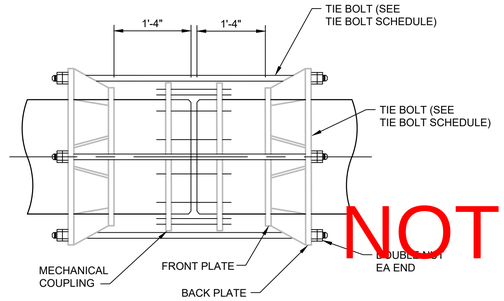

NOTES:

1. THE PIPE FOR LUG DESIGN SHALL INCLUDE WRAPPERS OR PADS OR THE PIPE WALL THICKNESS INCREASED AS REQUIRED TO MEET MINIMUM PIPE THICKNESS IN ACCORDANCE WITH AWWA M-11 DESIGN REQUIREMENTS.

STEEL PIPE HARNESSED MECHANICAL COUPLING WITH TYPE RR LUGS

NO SCALE

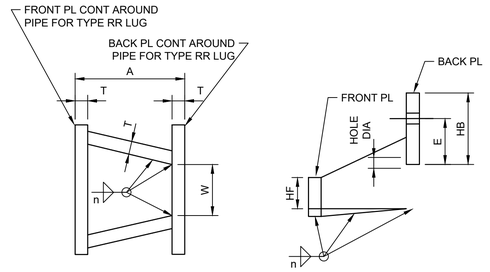

PLAN ELEVATION

NOT USED

DIMENSIONS IN INCHES									
TIE BOLT DIAMETER	T	A	Y	W	X	HB	E	HF	HOLE DIAMETER
1	1/2	5 3/4	RING	1 3/4	RING	4 5/8	3 1/4	2	1 1/8
1/8	182	7	RING	1 7/8	RING	5 1/4	3 5/8	2 1/2	1 1/4
3/8	5/8	8 3/4	RING	2 1/8	RING	5 3/4	3 3/4	2 1/2	1 1/2
[illegible]	3/4	12	RING	2 1/2	RING	6 1/2	4	2 1/2	1 7/8

NOTES:

1. n = PIPE WALL THICKNESS.
2. FOR HARNESS LUG TYPE RR, THE GUSSET PLATES BETWEEN THE FRONT PLATE AND THE BACK PLATE MAY BE PERPENDICULAR TO THE FRONT AND BACK PLATES WITH A MINIMUM CLEAR DISTANCE BETWEEN EACH PAIR OF GUSSET PLATES OF DIMENSION W.

STEEL PIPE TIE BOLT SCHEDULE FOR HARNESSED JOINTS				
NOMINAL PIPE SIZE (INCHES)	PRESSURE (PSI) (NOTE 1)	LUG TYPE	TIE BOLT DIA (INCHES)	NO. BOLTS (NOTE 3)
16	150	2	RR	1 1/8
24	150	4	RR	1
30	150	4	RR	1 1/8
48	150	6	RR	1 3/8
60	150	6	RR	1 3/4

NOTES:

1. PRESSURE SHALL BE THE PRESSURE AT WHICH THE PIPE IS HYDROSTATICALLY TESTED, OR IF THERE IS NO HYDROSTATIC FIELD TEST, IT SHALL BE THE SPECIFIED SHOP TEST PRESSURE.
2. NUMBER OF TIE BOLTS IS BASED ON AN ALLOWABLE STRESS ON NET TENSION AREA OF 40,000 PSI.
3. UNLESS OTHERWISE INDICATED, TIE BOLTS SHALL BE SPACED UNIFORMLY AROUND THE PIPE, BEGINNING WITH THE FIRST TWO AT THE HORIZONTAL CENTERLINE OF THE PIPE, SUBJECT TO THE APPROVAL OF THE ENGINEER.

STEEL PIPE HARNESS LUGS

NO SCALE

HARNESSED MECHANICAL COUPLING DETAILS

NO SCALE

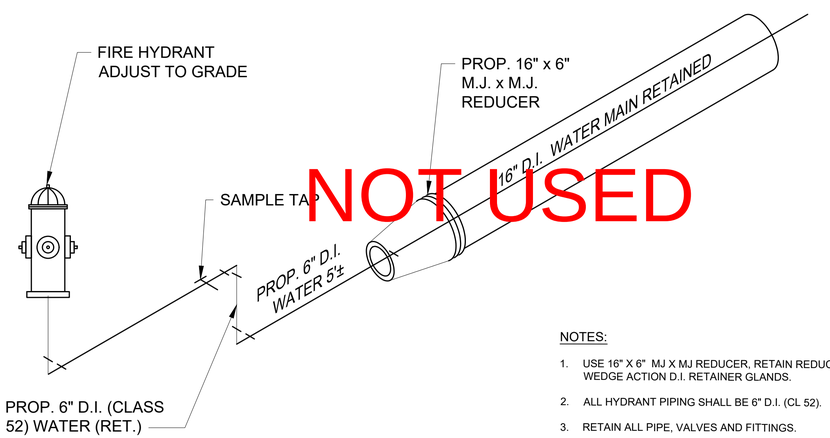

NOT USED

NOTES:

1. USE 16" X 6" MJ X MJ REDUCER, RETAIN REDUCER w/ WEDGE ACTION D.I. RETAINER GLANDS.
2. ALL HYDRANT PIPING SHALL BE 6" D.I. (CL 52).
3. RETAIN ALL PIPE, VALVES AND FITTINGS.

PROPOSED 16" END OF TYPE 5 HYDRANT MODIFIED DETAIL

NO SCALE STA: 243+83.05

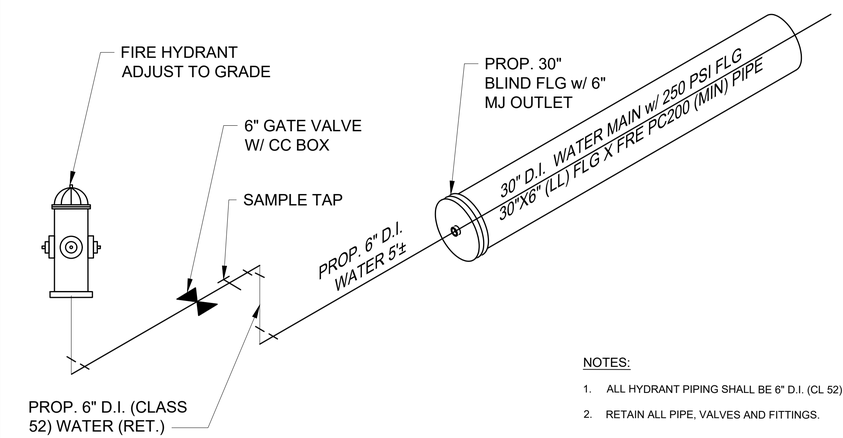

NOTES:

1. ALL HYDRANT PIPING SHALL BE 6" D.I. (CL 52).
2. RETAIN ALL PIPE, VALVES AND FITTINGS.

PROPOSED 30" END OF MAIN FLUSH HYDT. DETAIL

NO SCALE STA: 156+76.51

REVISION NOTICE
REVISED 11-21-2023
DESTROY OLD PRINTS
NATURE OF REVISIONS REMOVE PH. B FROM SET, MODIFY CONNECTIONS FOR PH. A AND C
REVISION AFFECTS EST.: YES [X] NO [ ]
REVISION AFFECTS MAT'L.: YES [X] NO [ ]
REVISION AFFECTS PROPERTY: YES [ ] NO [X]
REVISED BY AMO CHKD. BY MM
CHKD. BY ENGR. MRK
APPD. SR. DESIGN ENGR. _____

PROFESSIONAL CIVIL ENGINEER
MITCHELL R. KLEIN
E-17008
STATE OF NEBRASKA
11-21-2023

METROPOLITAN UTILITIES DISTRICT OMAHA, NEBRASKA	HDR ENGINEERING, INC	INITIALS:	DATE:	MUD	INITIAL:	DATE:
	BASEMAP DRAWN:	AMO	10-2022	CKD, BY SR, CAD TECH:	JCK	6-19-23
	PROPOSED DRAWN:	AMO	6-2023	CKD, BY DESIGNER:	EHW	6-22-23
SOUTHEAST BELLEVUE WATER MAIN EXTENSIONS	DESIGN:	MRK	6-29-2023	CKD, BY PLANT:	TLM	6-21-23
	QA/QC:	CAC	6-29-2023	CKD, BY CORROSION:	LMW	6-20-23
WP1871	APPROVED:	MRK	6-29-2023	CKD, BY SR. DESIGN ENGINEER (W):	RMT	6-26-23
				PAGE NO.	37 OF 37	

c:\pwworking\central01\d2892775\00C506.dwg $DATE$ $TIME$