MISSOURI HIGHWAYS AND TRANSPORTATION COMMISSION
PLANS FOR PROPOSED
STATE HIGHWAY
JACKSON COUNTY
SEC. 8 & 9, T47N, R31W

DESIGN DESIGNATION
ROUTE 50

A.A.D.T. * 2022 = 53,100
A.A.D.T. * 2042 = 81,850
D.H.V. = 10%
T = 6%
V = 60 M.P.H.
D = EB 39% WB 61%

FUNCTIONAL CLASSIFICATION-FREEWAY

FULLY CONTROLLED ACCESS HIGHWAY

THIS SHALL BE A FULLY CONTROLLED ACCESS HIGHWAY BETWEEN STA. 720+95.66 AND STA. 735+28.37. NO ABUTTING OWNER SHALL HAVE THE RIGHT OF DIRECT ACCESS TO SAID HIGHWAY OR ITS RIGHT-OF-WAY EXCEPT THAT ACCESS WILL BE PERMITTED TO ANY ADJACENT OUTER ROADWAY OR SERVICE ROAD TO WHICH ACCESS IS NOT SPECIFICALLY PROHIBITED BY THE SPECIAL SYMBOL DENOTING "NO RIGHT OF ACCESS" AS SHOWN ON THE PLANS. NO ACCESS WILL BE PERMITTED FROM OUTER ROADWAYS AND SERVICE ROADS TO THROUGHWAYS EXCEPT ALONG ROUTES CONSTRUCTED FOR THAT PURPOSE. OUTER ROADWAYS AND SERVICE ROADS, AS THE CASE MAY BE, ARE SO DESIGNATED ON THE PLANS.

- BEGINNING AND ENDING OF CONTROLLED ACCESS
- CONTROLLED ACCESS
- NO RIGHT OF ACCESS OR CROSSING OF LINES BEARING THIS SYMBOL WILL BE PERMITTED UNDER ANY CIRCUMSTANCES.
- TEMPORARY ACCESS THROUGH FUTURE NO RIGHT OF ACCESS

CONVENTIONAL SYMBOLS
(USED IN PLANS)

	EXISTING	NEW
BUILDINGS AND STRUCTURES		
GUARD RAIL		
GUARD CABLE		
CONCRETE RIGHT-OF-WAY MARKER		
STEEL RIGHT-OF-WAY MARKER		
LOCATION SURVEY MARKER		
UTILITIES		
FIBER OPTICS	-FO-	-FO-
OVERHEAD CABLE TV	-OTV-	-OTV-
UNDERGROUND CABLE TV	-UTV-	-UTV-
OVERHEAD TELEPHONE	-OT-	-OT-
UNDERGROUND TELEPHONE	-UT-	-UT-
OVERHEAD POWER	-OE-	-OE-
UNDERGROUND POWER	-UE-	-UE-
SANITARY SEWER	-S-	-S-
STORM SEWER	-SS-	-SS-
GAS	-G-	-G-
WATER	-W-	-W-
MANHOLE		
FIRE HYDRANT		
WATER VALVE		
WATER METER		
DROP INLET		
DITCH BLOCK		
GROUND MOUNTED SIGN		
LIGHT POLE		
H-FRAME POWER POLE		
TELEPHONE PEDESTAL		
FENCE		
CHAIN LINK	-V-	
WOVEN WIRE	-X-	
GATE POST		
BENCHMARK		

NOTE: DASHED OR OPEN SYMBOLS INDICATE EXISTING FEATURES

DESIGN DESIGNATION
ROUTE 291

A.A.D.T. * 2022 = 25,200
A.A.D.T. * 2042 = 30,900
D.H.V. = 10%
T = 6%
V = 45 M.P.H.
D = NB 50% SB 50%

FUNCTIONAL CLASSIFICATION-PRINCIPAL ARTERIAL

DESIGN DESIGNATION
BLUE PARKWAY

A.A.D.T. * 2022 = 8,900
A.A.D.T. * 2042 = 8,600
D.H.V. = 10%
T = 2%
V = 35 M.P.H.
D = EB 51% WB 49%

FUNCTIONAL CLASSIFICATION-COMMERCIAL COLLECTOR

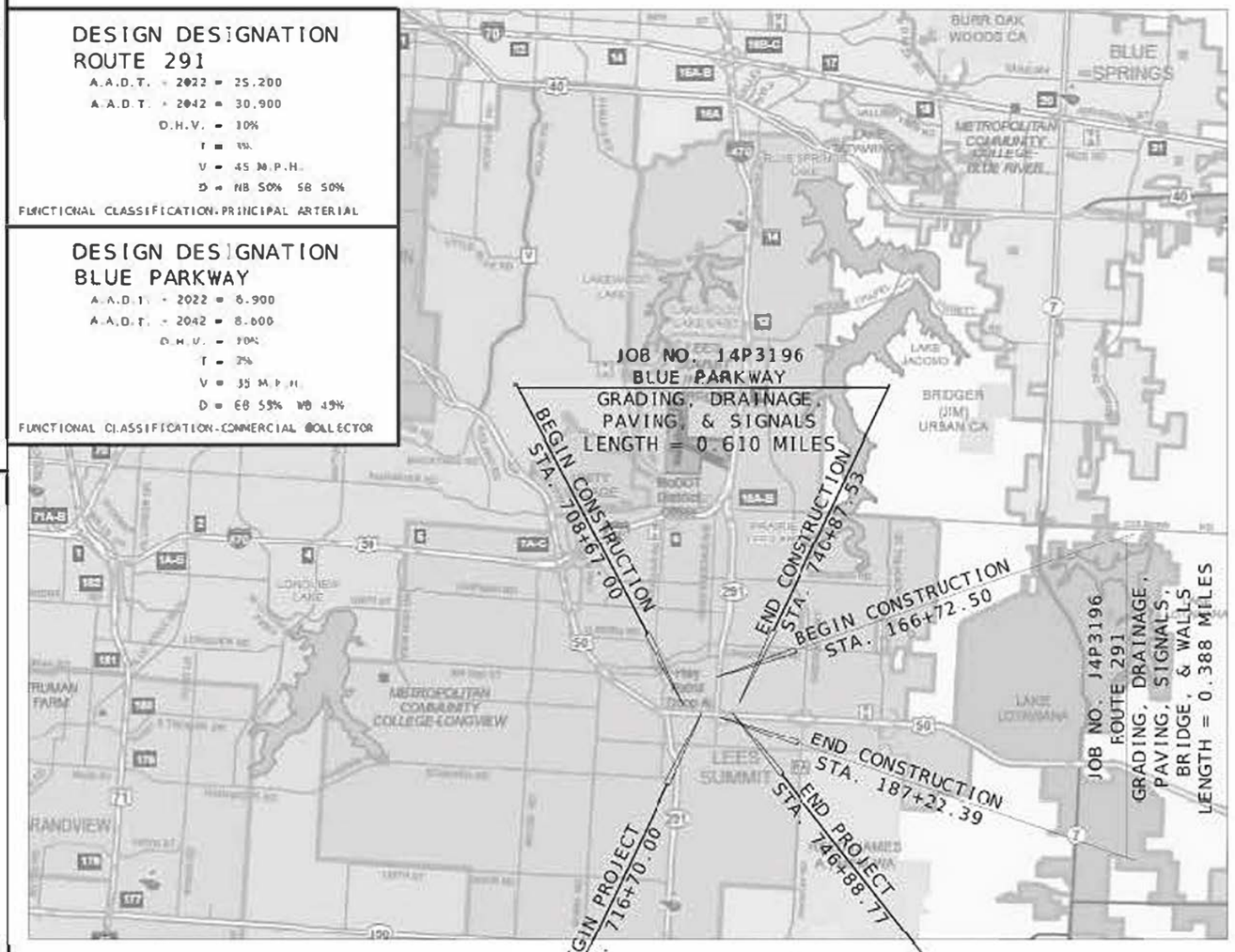

NOT TO SCALE

THE EXISTENCE AND APPROXIMATE LOCATION OF UTILITY FACILITIES KNOWN TO EXIST, AS SHOWN ON THE PLANS, ARE BASED ON THE BEST INFORMATION AVAILABLE TO THE COMMISSION AT THIS TIME. THIS INFORMATION IS PROVIDED BY THE COMMISSION "AS-IS" AND THE COMMISSION EXPRESSLY DISCLAIMS ANY REPRESENTATION OR WARRANTY AS TO THE COMPLETENESS, ACCURACY, OR SUITABILITY OF THE INFORMATION FOR ANY USE. RELIANCE UPON THIS INFORMATION IS DONE AT THE RISK AND PERIL OF THE USER, AND THE COMMISSION SHALL NOT BE LIABLE FOR ANY DAMAGES THAT MAY ARISE FROM ANY ERROR IN THE INFORMATION. IT IS, THEREFORE, THE RESPONSIBILITY OF THE CONTRACTOR TO VERIFY THE EXISTENCE, LOCATION AND STATUS OF ANY FACILITY, SUCH VERIFICATION INCLUDES DIRECT CONTACT WITH THE LISTED UTILITIES.

INDEX OF SHEETS

DESCRIPTION	SHEET NUMBER
TITLE SHEET	1
TYPICAL SECTIONS (TS) 119 SHEETS	2
QUANTITIES (QU) 138 SHEETS	3
PLAN-PROFILE (PP)	4 - 19
RIGHT OF WAY (RW)	20 - 26
COORDINATE POINTS (CP)	27 - 29
SPECIAL SHEETS (SS)	30 - 103
TRAFFIC CONTROL SHEETS (TC)	104 - 167
EROSION CONTROL SHEETS (EC)	168 - 182
LIGHTING (LT)	183 - 189
CITY LIGHTING (LT)	190 - 197
SIGNALS (SG)	198 - 217
FIBER (ITS)	218 - 225
SIGNING (SN)	226 - 247
PAVEMENT MARKING (PM)	248 - 256
CULVERT SECTIONS (CS)	257 - 277
WATER RELOCATION SHEETS (WR)	278 - 286
SEWER RELOCATION SHEETS (SR)	287 - 288
WATER & SEWER QUANTITY SHEET (WS)	289
BRIDGE DRAWINGS (B)	
A9328	1 - 46
A9329	1 - 8
A9330	1 - 8
KC-0123	1 - 3
KC-0124	1 - 3
CROSS SECTIONS (XS)	1 - 157

LENGTH OF PROJECT

ROUTE 50

BEGIN CONSTRUCTION	STA.	716+70.00
END CONSTRUCTION	STA.	746+88.77
APPARENT LENGTH		3018.77 FEET

ROUTE 291

BEGIN CONSTRUCTION	STA.	166+72.50
END CONSTRUCTION	STA.	187+22.39
APPARENT LENGTH		2049.89 FEET

BLUE PARKWAY

BEGIN CONSTRUCTION	STA.	708+67.00
END CONSTRUCTION	STA.	740+87.53
APPARENT LENGTH		3220.53 FEET

EQUATIONS AND EXCEPTIONS:
STA. 730+69.98 BK. =
STA. 730+72.47 AH.

TOTAL CORRECTIONS	2.49 FEET
NET LENGTH OF PROJECT	8285.39 FEET

FOR INFORMATION ONLY
ESTIMATED DISTURBED ACRES 38 ACRES

Road Car
2025 CA 05 19-11 10:05:07

DATE PREPARED 4/8/2025
ROUTE 50/291
STATE MO
DISTRICT KC
SHEET NO. 1
COUNTY JACKSON
JOB NO. J4P3196
FEDERAL PROJECT NO. STB-3001(009)
PROJECT NO.
BRIDGE NO.

DESCRIPTION | DATE

IF A SEAL IS PRESENT ON THIS SHEET, IT WAS ELECTRONICALLY SEALED AND DATED.

MISSOURI HIGHWAYS AND TRANSPORTATION COMMISSION
MoDOT
105 WEST CAPITOL
JEFFERSON CITY, MO 65102
1-888-ASK-MODOT (1-888-275-6636)

LEE'S SUMMIT MISSOURI

olsson
1301 BURLINGTON ST., STE. 100
NORTH KANSAS CITY, MO 64116
PHONE: 816.361.1177
CERT. OF AUTHORITY NO. 001592

SEC/SUR 8 TWP 47N RGE 31W

(65'-65') PRESTRESSED CONCRETE SPREAD BOX BEAM SPANS

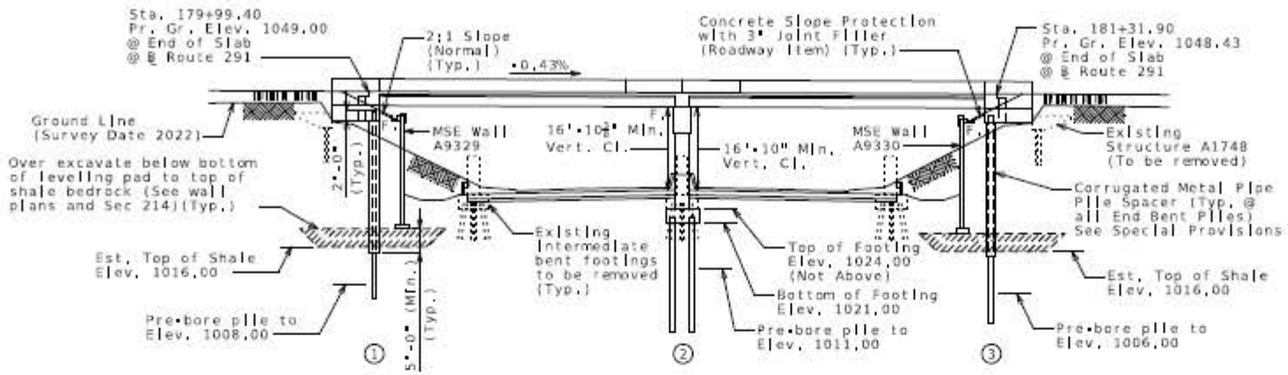

GENERAL ELEVATION

Pile Encasement	Option Used (✓)
Pipe Pile Spacer	
Pile Jacket	

MoDOT Construction personnel will indicate the pile encasement used.

Note:
Existing roadway fill under the ends of the bridge shall be removed as shown. Removal of existing roadway fill will be considered completely covered by the contract unit price for roadway excavation.

Roadway fill, exclusive of Select Granular Backfill for Structural Systems, shall be completed to the final roadway section and up to the elevation of the bottom of the concrete beam within the limits of the structure and for not less than 25 feet in back of the fill face of the end bents before any piles are driven for any bents falling within the embankment section.

For General Notes, Estimated Quantities, Estimated Quantities for Slab on Concrete Beam, Foundation Data and Location Sketch, see Sheet No. 2.

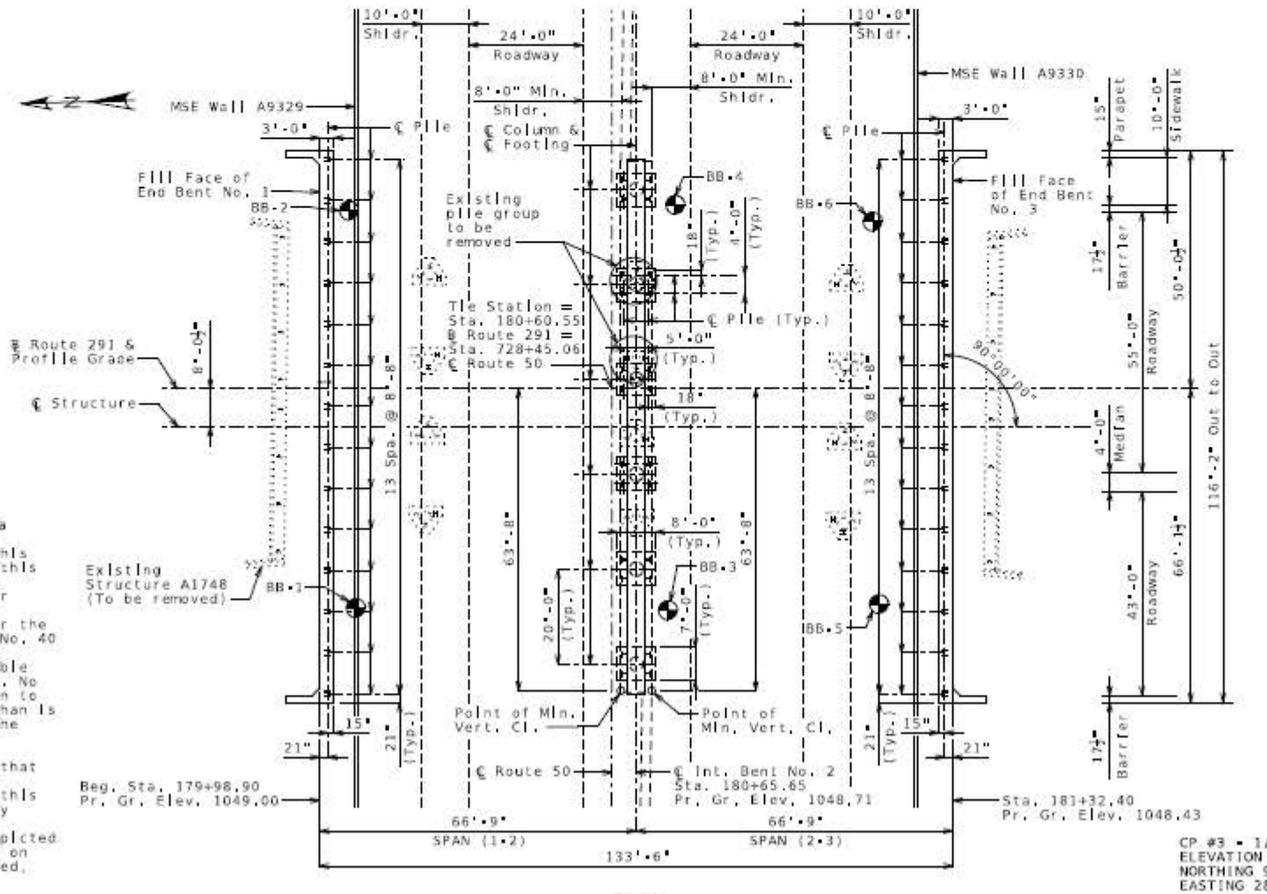

PLAN

℄ Indicates location of borings.

Notice and Disclaimer Regarding Boring Log Data

The locations of all subsurface borings for this structure are shown on the plan sheet(s) for this structure. The boring data for all locations indicated, as well as any other boring logs or other factual records of subsurface data and investigations performed by the department for the design of the project, are shown on Sheet(s) No. 40 thru 46 and may be included in the Electronic Bridge Deliverables. They will also be available from the Project Contact upon written request. No greater significance or weight should be given to the boring data depicted on the plan sheets than is given to the subsurface data available from the district or elsewhere.

The Commission does not represent or warrant that any such boring data accurately depicts the conditions to be encountered in constructing this project. A contractor assumes all risks it may encounter in basing its bid prices, time or schedule of performance on the boring data depicted here or those available from the district, or on any other documentation not expressly warranted, which the contractor may obtain from the Commission.

CP #3 - 1/2" REBAR W/ CONTROL POINT CAP
ELEVATION = 1034.50
NORTHING 997220.24
EASTING 2828083.97

BRIDGE; ROUTE 291 OVER ROUTE 50

ROUTE 50 FROM ROUTE I-470 TO ROUTE 7
ABOUT 3.6 MILES SOUTHEAST OF ROUTE I-470
TIE STATION 728+45.06 (℄ Route 50)

Designed Sep. 2023
Detailed Oct. 2023
Checked Feb. 2024

Note: This drawing is not to scale. Follow dimensions.

Digitally signed by Grant Luckenbill
Date: 2025.02.27 15:54:52 -06'00'

GRANT C. LUCKENBILL
NUMBER PE-2012018100
2-28-25
GRANT C. LUCKENBILL-ENGINEER
MO# PE-2012018100

DATE PREPARED 2/27/2025
ROUTE 291 | STATE MO
DISTRICT BR | SHEET NO. 1
COUNTY JACKSON
JOB NO. J4P3196
FEDERAL PROJECT NO STB-3001(009)
PROJECT NO.
BRIDGE NO. A9328

DESCRIPTION | DATE | REV.

MISSOURI HIGHWAYS AND TRANSPORTATION COMMISSION
MoDOT
LEE'S SUMMIT MISSOURI
olsson
1301 BURLINGTON ST., STE. 100
NORTH KANSAS CITY, MO 64116
PHONE# 816.361.1177
CERT. OF AUTHORITY NO. 001592

IF A SEAL IS PRESENT ON THIS SHEET IT HAS BEEN ELECTRONICALLY SEALED AND DATED.

Estimated Quantities

Item		Substr.	Superstr.	Total
Removal of Miscellaneous ACM (Non-Friable)	sq. foot			15
Class 1 Excavation	cu. yard	125		125
Removal of Bridges (A1748)	lump sum			1
Bridge Approach Slab (Major)	sq. yard		512	512
(48 In.) Decorative Pedestrian fence (Structures)	linear foot		172	172
Pedestrian Handrail	linear foot		131	131
Galvanized Structural Steel Piles (12 In.)	linear foot	1162		1162
Galvanized Structural Steel Piles (14 In.)	linear foot	576		576
Pile Wave Analysis	each	1		1
Pre-Bore for Piling	linear foot	604		604
Pile Point Reinforcement	each	52		52
Class B Concrete (Substructure)	cu. yard	239.9		239.9
Type H Barrier	linear foot		345	345
Slab on Concrete Beam	sq. yard		1711	1711
Raised Median Barrier	sq. foot		586	586
Form Liners	sq. yard		150	150
32 In. Parapet Wall	linear foot		173	173
24 In., Prestressed Concrete Spread Box Beam	linear foot		1301	1301
Reinforcing Steel (Bridges)	pound	4030		4030
Conduit System on Structure	lump sum		1	1
Reinforcing Steel (Epoxy Coated)	pound	24,180		24,180
Slab Drain	each		4	4
Vertical Drain at End Bents	each			2
Plain Neoprene Bearing Pad	each		20	20
Laminated Neoprene Bearing Pad	each		20	20
Pipe Pile Spacers	each	28		28

All concrete above the construction joint in the end bents is included in the Estimated Quantities for Slab on Concrete Beam.

All reinforcement in the end bents is included in the Estimated Quantities for Slab on Concrete Beam.

All reinforcement in the intermediate bent concrete diaphragms except reinforcement embedded in the beam cap is included in the Estimated Quantities for Slab on Concrete Beam.

All concrete above the intermediate beam cap is included in the Estimated Quantities for Slab on Concrete Beam.

Foundation Data

Type	Design Data		Bent Number 1	Bent Number 2	Bent Number 3
Load Bearing Pile	Pile Type and Size		HP 12x53	HP 14x73	HP 12x53
	Number	ea	14	24	14
	Approximate Length Per Each	ft	39	24	44
	Pile Point Reinforcement	ea	All	All	All
	Min. Galvanized Penetration (Elev.)	ft	Full Length	Full Length	Full Length
	Pile Driving Verification Method		DF	WEAP	DF
	Resistance Factor		0.4	0.5	0.4
	Minimum Nominal Axial Compressive Resistance	kip	528	660	528

DF = FHWA-modified Gates Dynamic Pile Formula
WEAP = Wave Equation Analysis of Piles

$$\text{Minimum Nominal Axial Compressive Resistance} = \frac{\text{Maximum Factored Loads}}{\text{Resistance Factor}}$$

Prebore for piles at Bents No. 1, 2, & 3 to elevations 1008, 1011, and 1006, respectively. The prebored hole shall be backfilled with sand prior to placement of the pile.

Manufactured pile point reinforcement shall be used on all piles in this structure.

All piles shall be galvanized down to the minimum galvanized penetration (elevation).

Pile point reinforcement need not be galvanized. Shop drawings will not be required for pile point reinforcement.

HP piles are anticipated to be driven to refusal on rock. Review all borings for depth of rock and restrict driving as appropriate to comply with hard rock driving criteria in accordance with Sec 702. When pile refusal on rock occurs, as approved by the engineer, the minimum nominal axial compressive resistance is verified and no additional pile driving verification method is required.

General Notes:

Design Specifications:
2020 AASHTO LRFD Bridge Design Specifications (9th Ed.)
Seismic Design Category = A

Design Loading:
Vehicular = ML-93
Future Wearing Surface = 35 lb/sf
Earth = 120 lb/cf
Equivalent Fluid Pressure = 45 lb/cf
Superstructure: Simply Supported Non-Composite for dead load, Continuous Composite for live load.

Design Unit Stresses:

Class B Concrete	(Substructure)	f'c = 3,000 psi
Class B-2 Concrete	(Superstructure, except Prestressed Beams, Type H Barrier & Parapet Wall)	f'c = 4,000 psi
Class B-1 Concrete	(Type H Barrier & Parapet Wall)	f'c = 4,000 psi
Reinforcing Steel	(ASTM A615 Grade 60)	fy = 60,000 psi
Structural Steel HP Pile	(ASTM A709 Grade 50)	fy = 50,000 psi

For prestressed box beam stresses, see Sheet No. 19

Neoprene Pads:
Neoprene Bearing Pads shall be 60 durometer and shall be in accordance with Sec 716.

Joint Filler:
All joint filler shall be in accordance with Sec 1057 for preformed sponge rubber expansion and partition joint filler, except as noted.

Reinforcing Steel:
Minimum clearance to reinforcing steel shall be 1 1/2", unless otherwise shown.

Minimum clearance between galvanized piles and uncoated (plain) reinforcing steel including bar supports shall be 1 1/2". Nylon, PVC, or polyethylene spacers shall be used to maintain clearance. Nylon cable ties shall be used to bind the spacers to the reinforcement.

Traffic Handling:
Route 50 traffic to be routed onto ramps during construction. Structure to be closed during construction. Traffic to be maintained on other routes during construction. See roadway plans for traffic control.

Estimated Quantities for Slab on Concrete Beam

Item		Total
Class B-2 Concrete	cu. yard	499
Reinforcing Steel (Epoxy Coated)	pound	161,710

The table of Estimated Quantities for Slab on Concrete Beam represents the quantities used by the State in preparing the cost estimate for concrete slabs. The area of the concrete slab will be measured to the nearest square yard longitudinally from end of slab to end of slab and transversely from out to out of bridge slab (or with the horizontal dimensions as shown on the plan of slab). Payment for stay-in-place corrugated steel forms, conventional forms, all concrete and epoxy coated reinforcing steel will be considered completely covered by the contract unit price for the slab. Variations may be encountered in the estimated quantities but the variations cannot be used for an adjustment in the contract unit price.

Method of forming the slab shall be as shown on the plans and in accordance with Sec 703. All hardware for forming the slab to be left in place as a permanent part of the structure shall be coated in accordance with ASTM A123 or ASTM B633 with a thickness class SC 4 and a finish type I, II or III.

Slab shall be cast-in-place with conventional forms or stay-in-place corrugated steel forms. Precast panels will not be permitted.

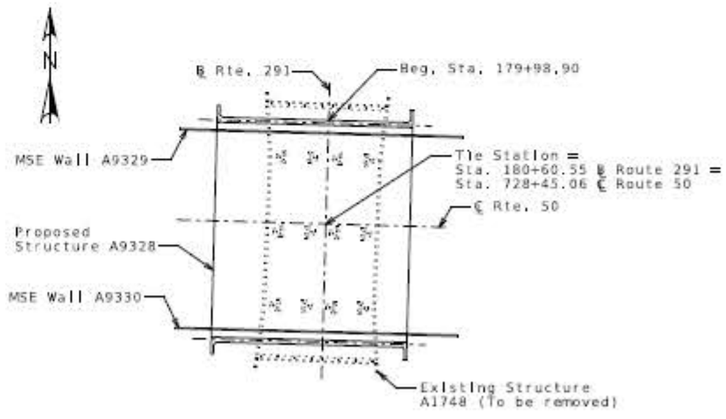

LOCATION SKETCH

GRANT C. LUCKEHILL - ENGINEER
MO# PE-2012018100
DATE PREPARED: 3/7/2025
ROUTE: 291 | STATE: MO
DISTRICT: BR | SHEET NO.: 2
COUNTY: JACKSON
JOB NO.: J4P3196
FEDERAL PROJECT NO: STB-3001(009)
PROJECT NO.:
BRIDGE NO.: A9328

DESCRIPTION	DATE

MISSOURI HIGHWAYS AND TRANSPORTATION COMMISSION
MoDOT
LEE'S SUMMIT MISSOURI

olsson
1301 BURLINGTON ST., STE. 100
NORTH KANSAS CITY, MO 64116
PHONE: 816.361.1177
CERT. OF AUTHORITY NO. 001592
105 WEST CAPITOL
JEFFERSON CITY, MO 65101
1-888-ASK-MODOT (1-888-275-6636)

IF A SEAL IS PRESENT ON THIS SHEET IT HAS BEEN ELECTRONICALLY SEALED AND DATED.

GENERAL NOTES AND QUANTITIES

Detailed Oct. 2023
Checked Feb. 2024

Note: This drawing is not to scale. Follow dimensions.

F:\2021\04501-05000\021-04786\40-Design\Microstation\J4P3196\plan_sheets\16 Bridge Sheets\B_A9328_002_J4P3196_Gen Notes.dgn 10:44:48 AM 3/7/2025

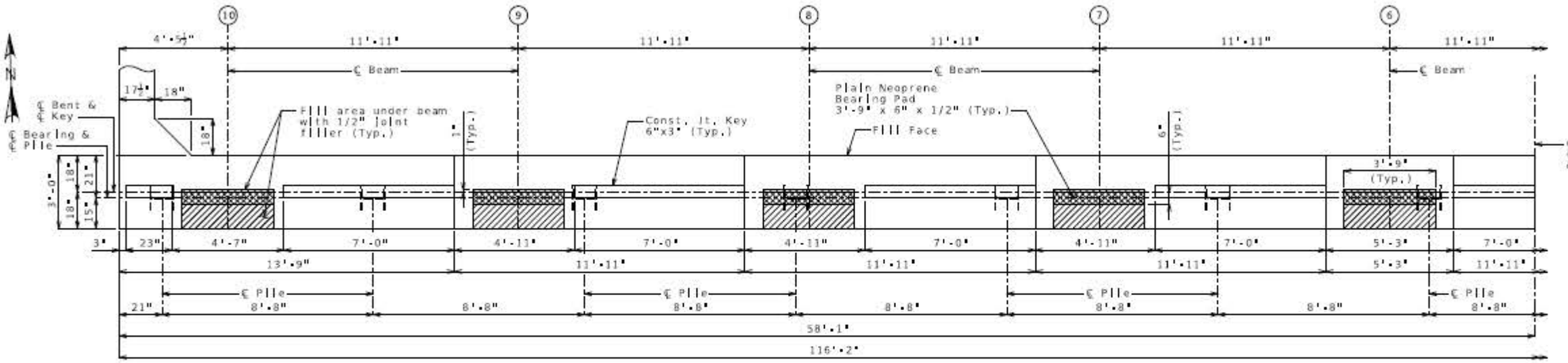

PART PLAN OF BEAM

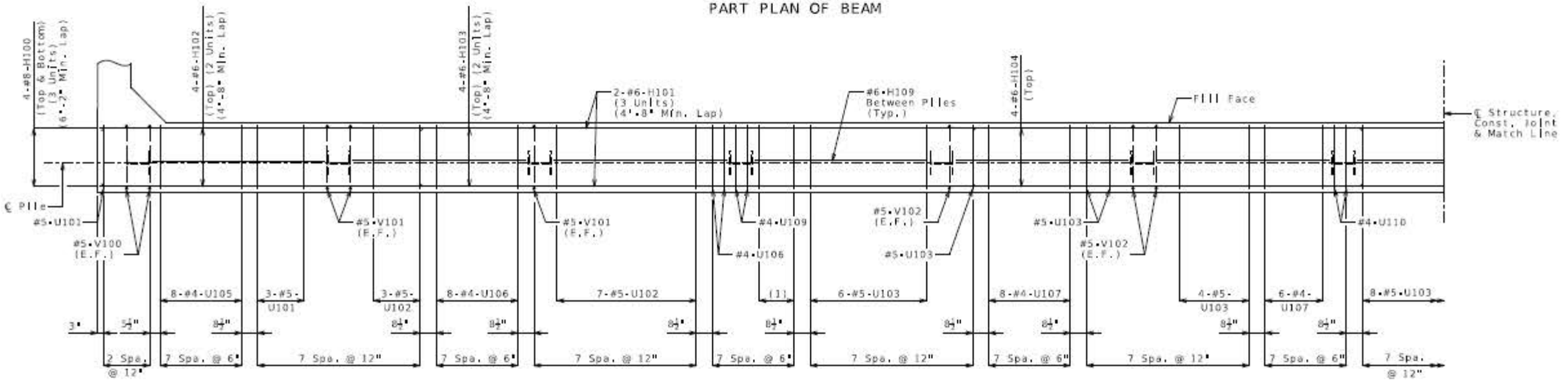

PART PLAN OF BEAM SHOWING REINFORCEMENT

(Keys and steps not shown for clarity.)
(1) 4-#5-U106

Substructure Quantity Table for Bent No. 1		
Item		Quantity
Galvanized Structural Steel Piles (12 In.)	linear foot	546
Pre-Bore for Piling	linear foot	168
Pile Point Reinforcement	each	14
Class B Concrete (Substructure)	cu. yard	49.5

These quantities are included in the Estimated Quantities table on Sheet No. 2.

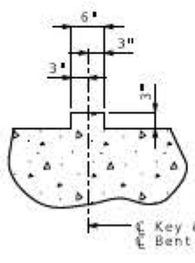

SECTION THRU KEY

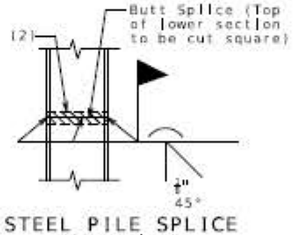

STEEL PILE SPLICE
(If required)

(2) Galvanizing material shall be omitted or removed one inch clear of weld locations in accordance with Sec 702.

Notes:

Work this sheet with Sheets No. 4, 5, 6, and 7.

Reinforcing steel shall be shifted to clear piles. U bars shall clear piles by at least 1 1/2 inches.

DETAILS OF END BENT NO. 1

Detailed Oct. 2023
Checked Feb. 2024

Note: This drawing is not to scale. Follow dimensions.

Digitally signed by Grant Luckenbill
Date: 2025.02.26 14:54:31-06'00'

GRANT C. LUCKENBILL NUMBER PE-2012018100
GRANT C. LUCKENBILL-ENGINEER
MO# PE-2012018100

DATE PREPARED: 2/27/2025
ROUTE: 291 | STATE: MO
DISTRICT: BR | SHEET NO.: 3
COUNTY: JACKSON
JOB NO.: J4P3196
FEDERAL PROJECT NO: STB-3001(009)
PROJECT NO.:
BRIDGE NO.: A9328

DESCRIPTION | DATE

MISSOURI HIGHWAYS AND TRANSPORTATION COMMISSION
MoDOT
105 WEST CAPITOL JEFFERSON CITY, MO 65101
1-888-ASK-MODOT (1-888-375-6636)

LEE'S SUMMIT MISSOURI

olsson
1301 BURLINGTON ST., STE. 100
NORTH KANSAS CITY, MO 64116
PHONE: 816.361.1177
CERT. OF AUTHORITY NO. 001592

IF A SEAL IS PRESENT ON THIS SHEET IT HAS BEEN ELECTRONICALLY SEALED AND DATED.

REV.

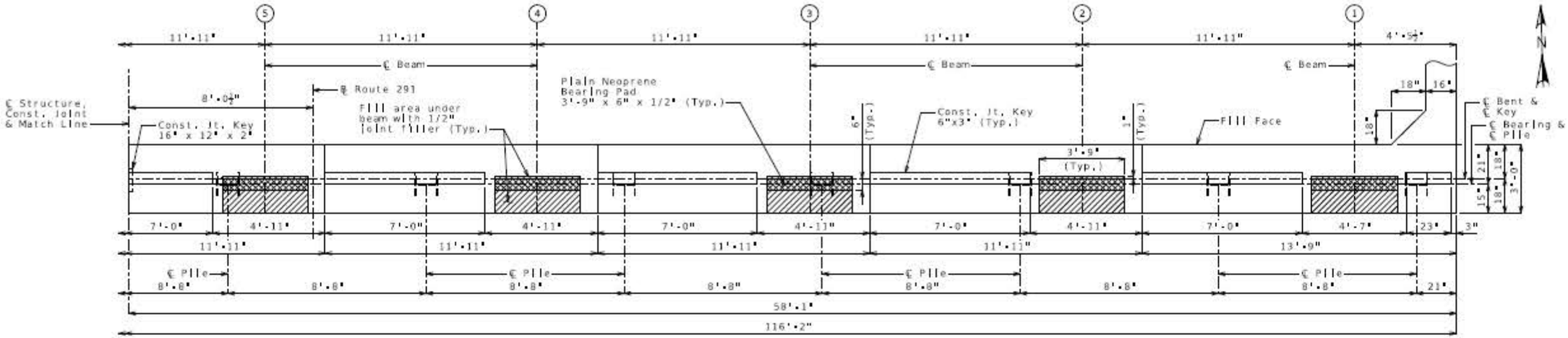

PART PLAN OF BEAM

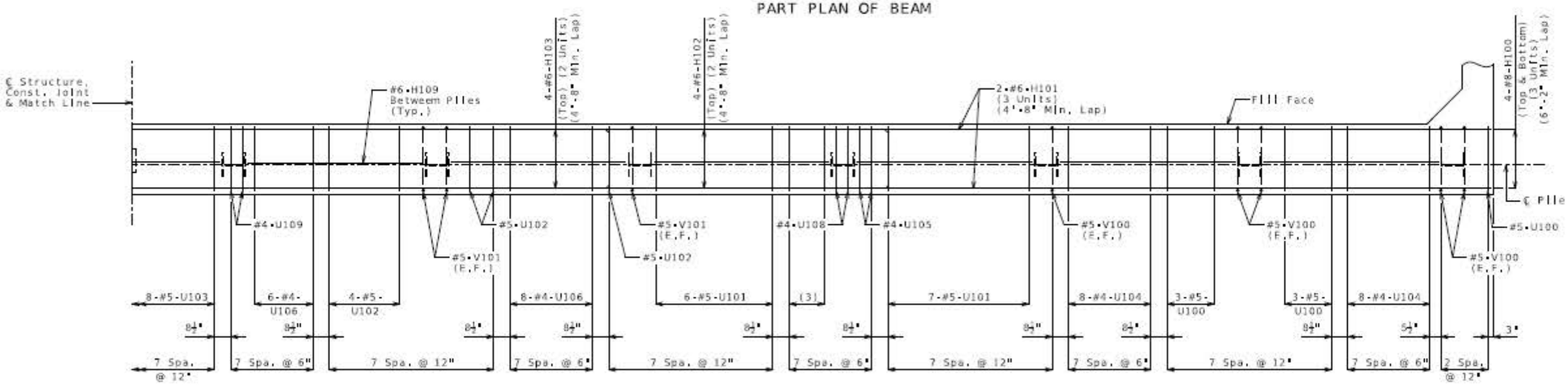

PART PLAN OF BEAM SHOWING REINFORCEMENT

(Keys and steps not shown for clarity.)
(3) 4-#5-U105

DETAILS OF END BENT NO. 1

Notes:

Work this sheet with Sheets No. 3, 5, 6, and 7.

Detailed Oct. 2023
Checked Feb. 2024

Note: This drawing is not to scale. Follow dimensions.

Sheet No. 4 of 46

F:\2021\045d\05000\021-04786\40-Design\Microstation\J4P3196\plan_sheets\16 Bridge Sheets\B_A9328_004_J4P3196_EB1_2.dgn 5:37:23 PM 2/27/2025

Digitally signed by Grant Luckenbill
Date: 2025.02.28 14:54:57-06'00'

GRANT C. LUCKENBILL NUMBER PE-2012018109

GRANT C. LUCKENBILL--ENGINEER
MO# PE--2012018109

DATE PREPARED: 2/27/2025

ROUTE	STATE
291	MO
DISTRICT	SHEET NO.
BR	4

COUNTY: JACKSON

JOB NO.: J4P3196

FEDERAL PROJECT NO: STB-3001(009)

PROJECT NO.:

BRIDGE NO.: A9328

DESCRIPTION | DATE | REV.

IF A SEAL IS PRESENT ON THIS SHEET IT HAS BEEN ELECTRONICALLY SEALED AND DATED.

MISSOURI HIGHWAYS AND TRANSPORTATION COMMISSION

MoDOT

105 WEST CAPITOL
JEFFERSON CITY, MO 65102
1-888-ASK-MODOT (1-888-275-6636)

LEE'S SUMMIT MISSOURI

olsson
1301 BURLINGTON ST., STE. 100
NORTH KANSAS CITY, MO 64116
PHONE: 816.361.1177
CERT. OF AUTHORITY NO. 001592

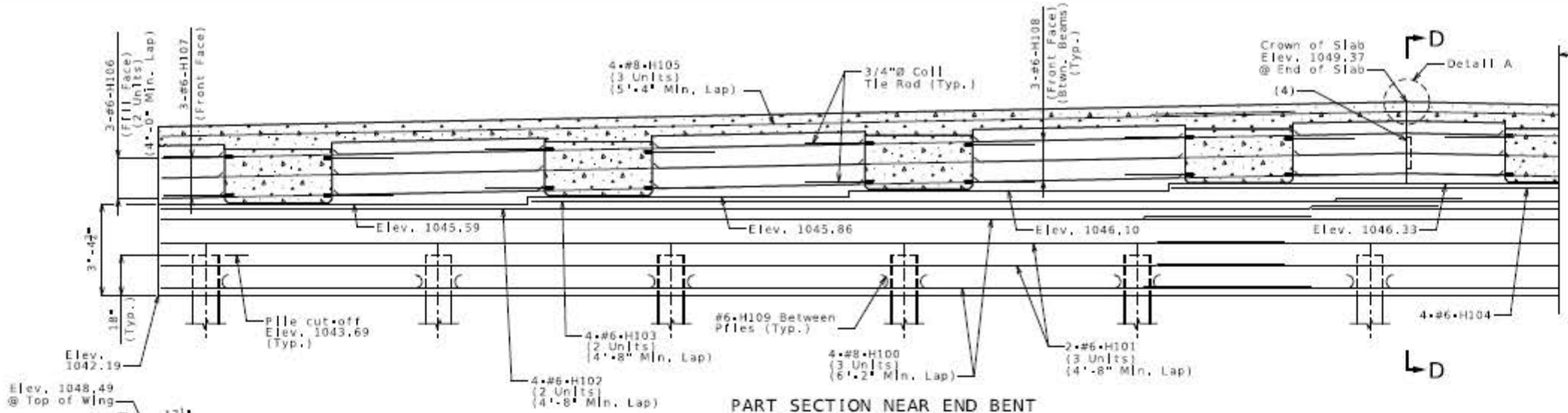

PART SECTION NEAR END BENT
(Looking back station)

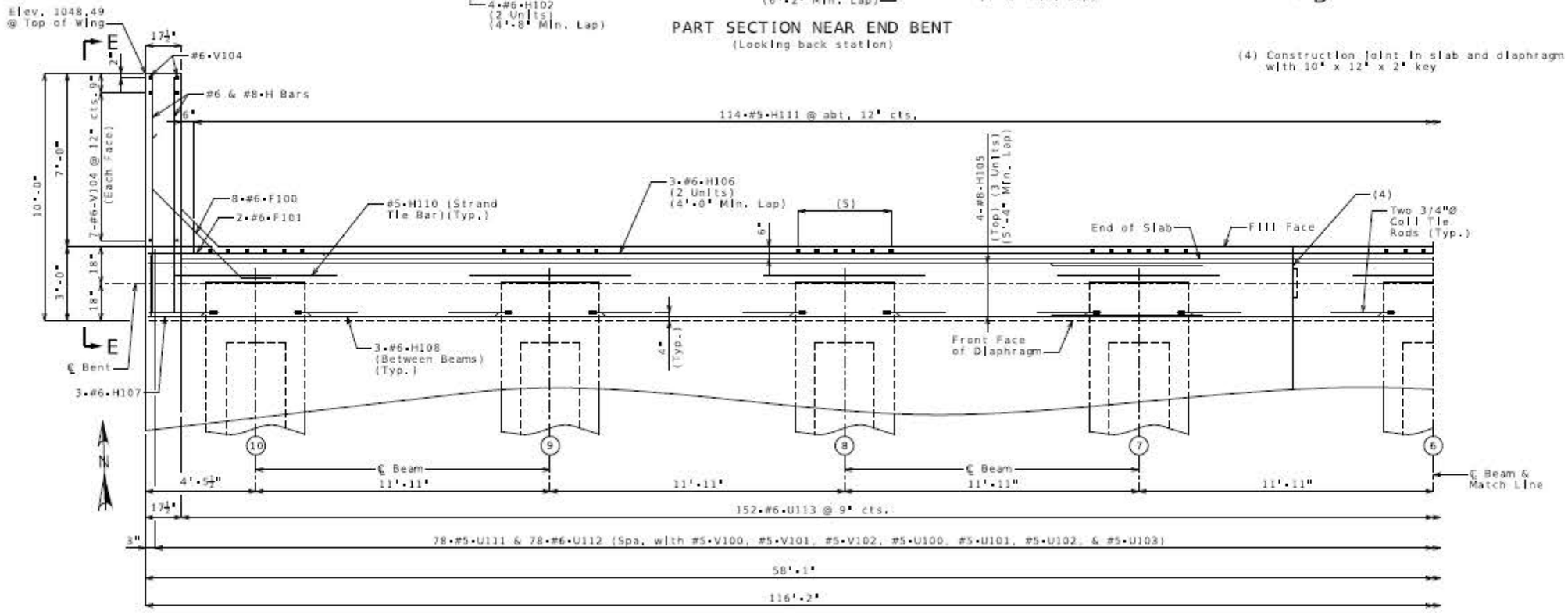

PART PLAN
(5) 6-#6-V103 centered behind beam @ 9" cts. (Typ.)

(4) Construction joint in slab and diaphragm with 10" x 12" x 2" key

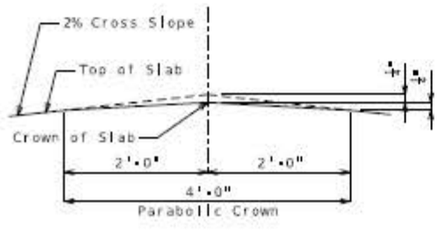

DETAIL A

Notes:

Work this sheet with Sheets No. 3, 4, 6, and 7.

For Section D-D and Elevation E-E, see Sheet No. 7.

The #6-F100 bars shall be bent in the field to clear beams.

All concrete in the end bent above top of beam and below top of slab shall be Class B-2.

Strands at end of the beams shall be field bent or, if necessary, cut in field to maintain 1 1/2-inch minimum clearance to fill face of end bent.

For location of coil tie rods and #5-H110 (strand tie bar), see Sheet No. 19.

For details of vertical drain at end bents, see Sheet No. 8.

For details of bridge approach slab, see Sheet No. 35.

DETAILS OF END BENT NO. 1

Detailed Oct. 2023
Checked Feb. 2024

Note: This drawing is not to scale. Follow dimensions.

F:\2021\04501-05000\021-04786\40-Design\Microstation\J4P3196\plan_sheets\16 Bridge Sheets\B_A9328_005_J4P3196_EB1_3.dgn 5:37:26 PM 2/27/2025

Digitally signed by Grant Luckenbill
Date: 2025.02.28 14:59:47-06'00'

GRANT C. LUCKENBILL NUMBER PE-2012018100

GRANT C. LUCKENBILL—ENGINEER
MO# PE-2012018100

DATE PREPARED
2/27/2025

ROUTE	STATE
291	MO
DISTRICT	SHEET NO.
BR	5

COUNTY
JACKSON

JOB NO.
J4P3196

FEDERAL PROJECT NO.
STB-3001(009)

PROJECT NO.

BRIDGE NO.
A9328

DESCRIPTION	DATE

MISSOURI HIGHWAYS AND TRANSPORTATION COMMISSION

MoDOT

105 WEST CAPITOL
JEFFERSON CITY, MO 65102
1-888-ASK-MODOT (1-888-275-6636)

LEE'S SUMMIT MISSOURI

olsson
1301 BURLINGTON ST., STE. 100
NORTH KANSAS CITY, MO 64116
PHONE: 816.361.1177
CERT. OF AUTHORITY NO. 001592

IF A SEAL IS PRESENT ON THIS SHEET IT HAS BEEN ELECTRONICALLY SEALED AND DATED.

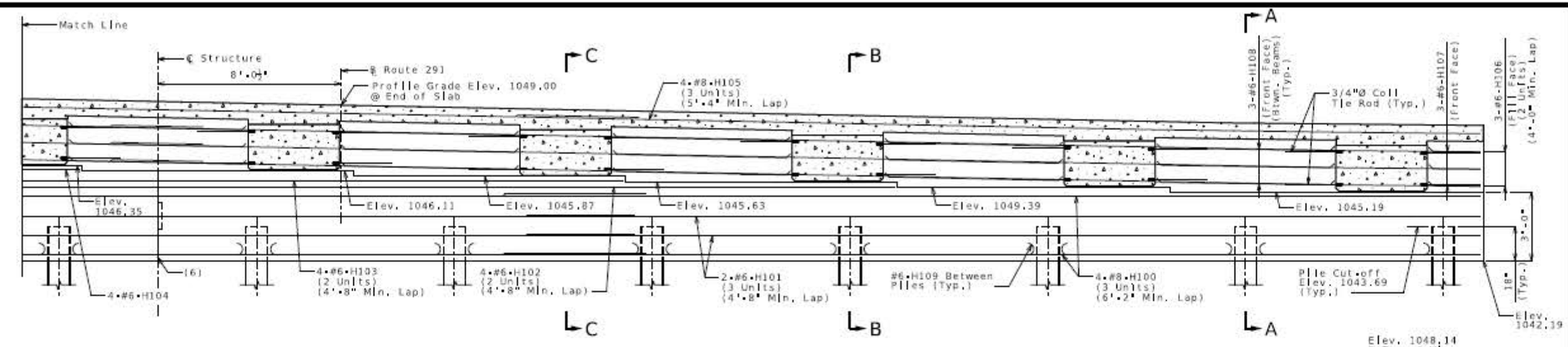

PART SECTION NEAR END BENT

(Looking back station)

(6) Construction Joint in beam
with 16" x 12" x2" key

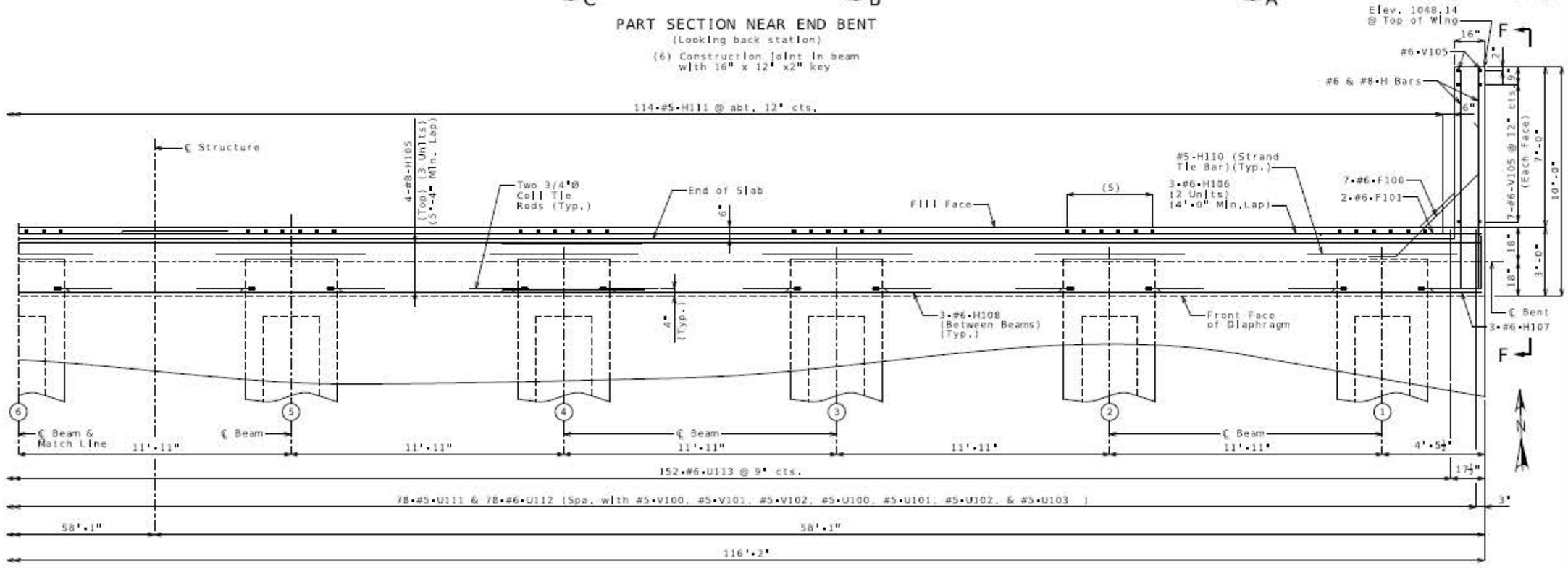

PART PLAN

(5)6-#6-V103 centered
behind beam @
9" cts. (Typ.)

Notes:

Work this sheet with Sheets No. 3, 4, 5, and 7.

For Sections A-A, B-B & C-C and Elevation F-F, see Sheet No. 7.

For reinforcement of Raised Median Barrier, see Sheet No. 26.

DETAILS OF END BENT NO. 1

Detailed Oct. 2023
Checked Feb. 2024

Note: This drawing is not to scale. Follow dimensions.

GRANT C. LUCKENBILL - ENGINEER
MO# PE-2012018100

DATE PREPARED
2/27/2025

ROUTE	STATE
291	MO
DISTRICT	SHEET NO.
BR	6

COUNTY
JACKSON

JOB NO.
J4P3196

FEDERAL PROJECT NO.
STB-3001(009)

PROJECT NO.

BRIDGE NO.
A9328

DESCRIPTION | DATE

MISSOURI HIGHWAYS AND TRANSPORTATION COMMISSION

MoDOT

105 WEST CAPITOL
JEFFERSON CITY, MO 65102
1-888-ASK-MODOT (1-888-275-6636)

LEE'S SUMMIT MISSOURI

olsson
1301 BURLINGTON ST., STE. 100
NORTH KANSAS CITY, MO 64116
PHONE: 816.361.1177
CERT. OF AUTHORITY NO. 001592

IF A SEAL IS PRESENT ON THIS SHEET IT HAS BEEN ELECTRONICALLY SEALED AND DATED.

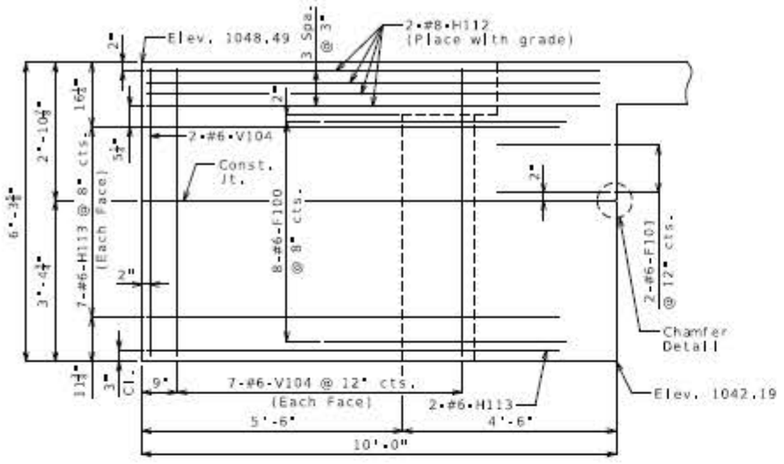

ELEVATION E-E

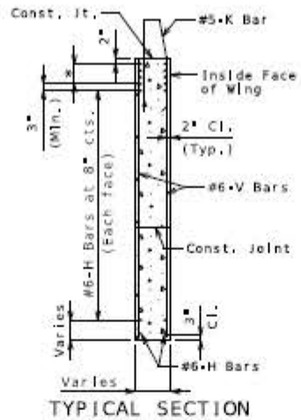

TYPICAL SECTION THRU WING

* #8-H Bars at 3" cts (Each face)(Place with grade)

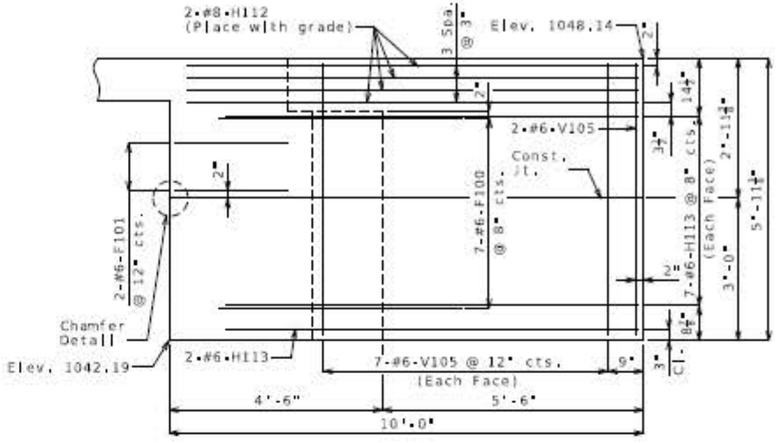

ELEVATION F-F

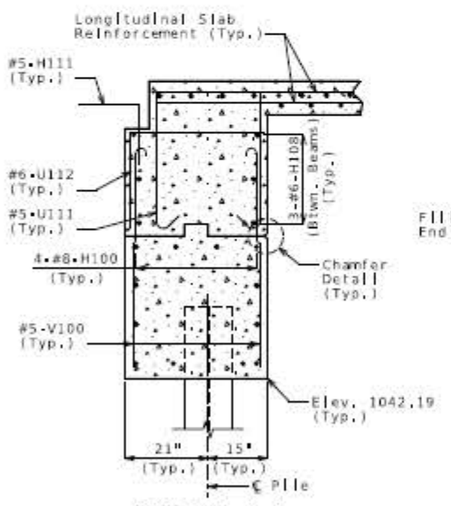

SECTION A-A

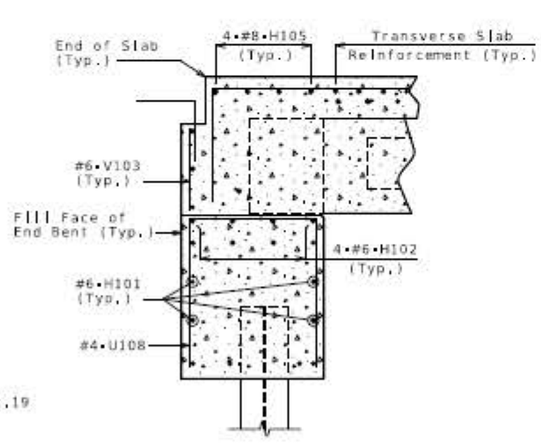

SECTION B-B

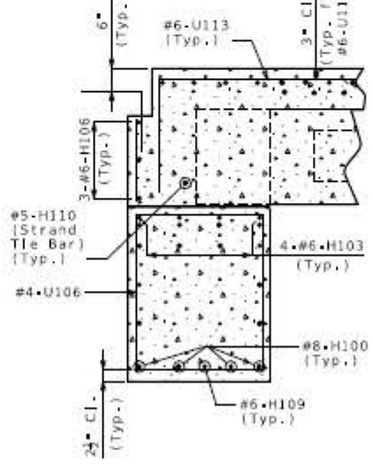

SECTION C-C

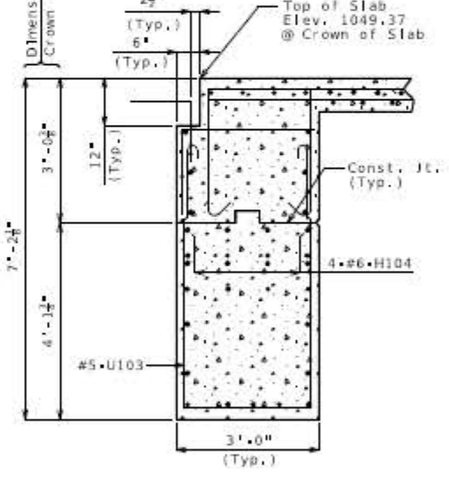

SECTION D-D

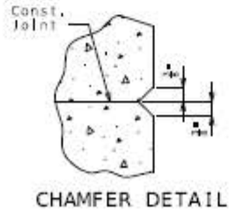

CHAMFER DETAIL

DETAILS OF END BENT NO. 1

Notes;

Work this sheet with Sheets No. 3, 4, 5, and 6.

For reinforcement of the Type H Barrier, see Sheets No. 31 and 32.

For reinforcement of the Parapet Wall, see Sheet No. 28.

Detailed Oct. 2023
Checked Feb. 2024

Note: This drawing is not to scale. Follow dimensions.

F:\2021\04501-05000\021-04786\40-Design\Microstation\J4P3196\plan_sheets\16 Bridge Sheets\B_A9328_007_J4P3196_EB1_S.dgn 5:37:31 PM 2/27/2025

Digitally signed by Grant Luckenbill
Date: 2025.02.28 14:53:25-06'00'

GRANT C. LUCKENBILL NUMBER PE-2012018100

GRANT C. LUCKENBILL-ENGINEER
MO# PE-2012018100

DATE PREPARED: 2/27/2025

ROUTE	STATE
291	MO
DISTRICT	SHEET NO.
BR	7

COUNTY: JACKSON

JOB NO.: J4P3196

FEDERAL PROJECT NO.: STB-3001(009)

PROJECT NO.:

BRIDGE NO.: A9328

IF A SEAL IS PRESENT ON THIS SHEET IT HAS BEEN ELECTRONICALLY SEALED AND DATED.

DESCRIPTION | DATE

MISSOURI HIGHWAYS AND TRANSPORTATION COMMISSION

105 WEST CAPITOL
JEFFERSON CITY, MO 65102
1-888-ASK-MODOT (1-888-275-6636)

MoDOT

LEE'S SUMMIT MISSOURI

olsson
1301 BURLINGTON ST., STE. 100
NORTH KANSAS CITY, MO 64116
PHONE: 816.361.1177
CERT. OF AUTHORITY NO. 001592

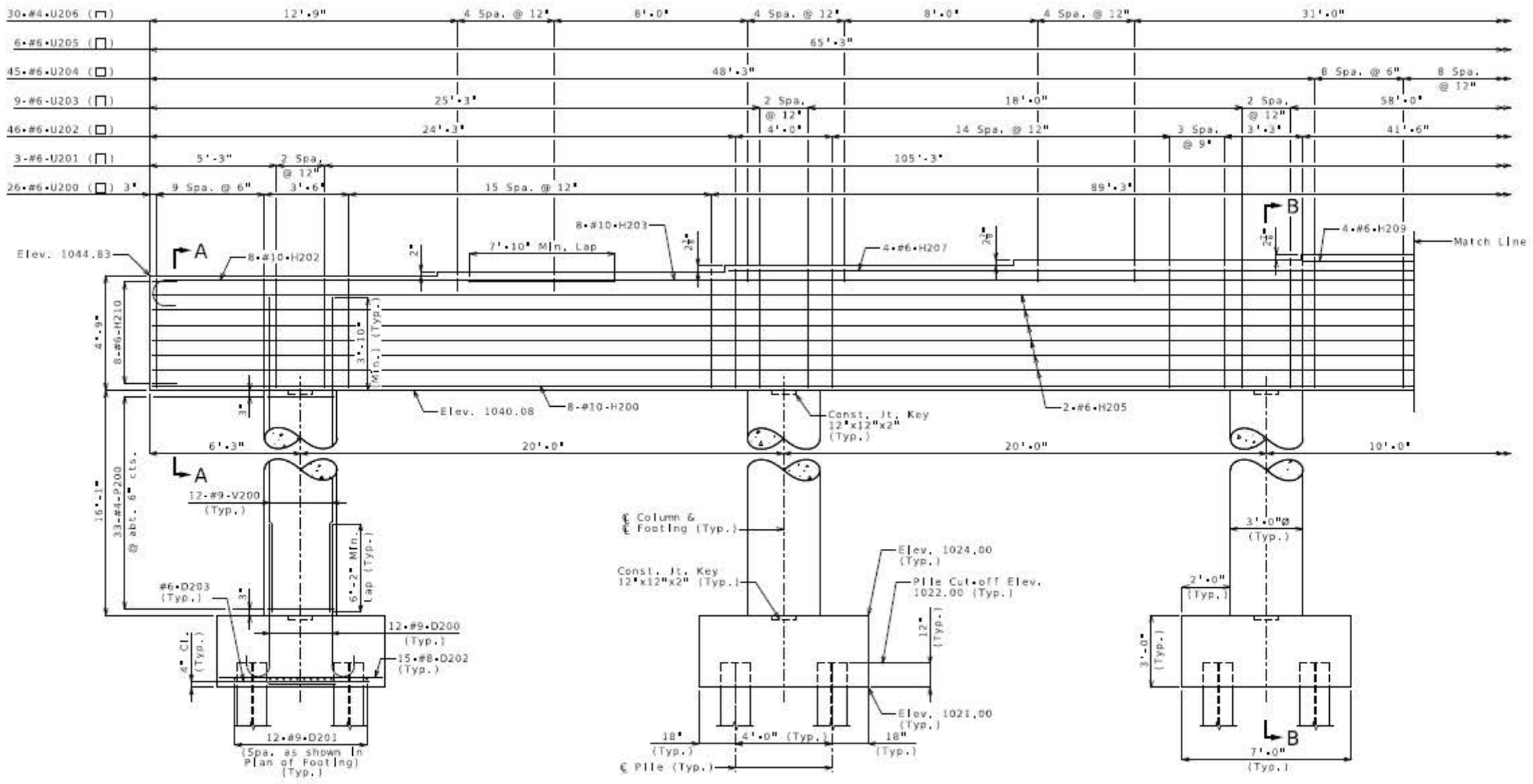

PART ELEVATION
(Beam keys not shown for clarity.)

Substructure Quantity Table for Bent No. 2		
Item		Quantity
Class I Excavation	cu. yard	125
Galvanized Structural Steel Piles (14 In.)	linear foot	576
Pile Wave Analysis	each	1
Pre-Bore for Piling	linear foot	240
Pile Point Reinforcement	each	24
Class B Concrete (Substructure)	cu. yard	140.9
Reinforcing Steel (Bridges)	pound	4030
Reinforcing Steel (Epoxy Coated)	pound	24,180

These quantities are included in the Estimated Quantities table on Sheet No. 2.

DETAILS OF INTERMEDIATE BENT NO. 2

Notes:

Work this sheet with Sheets No. 10, 11, 12, and 13.

Detailed Oct. 2023
Checked Feb. 2024

Note: This drawing is not to scale. Follow dimensions.

Digitally signed by Grant Lickenhill
Date: 2025.02.28 14:59:01-06'00'

GRANT C. LICKENHILL NUMBER PE-2012018100

GRANT C. LICKENHILL—ENGINEER
MO# PE-2012018100

DATE PREPARED: 2/27/2025
ROUTE: 291
STATE: MO
DISTRICT: BR
SHEET NO.: 9
COUNTY: JACKSON
JOB NO.: J4P3196
FEDERAL PROJECT NO.: STB-3001(009)
PROJECT NO.:
BRIDGE NO.: A9328

DESCRIPTION | DATE | REV.

IF A SEAL IS PRESENT ON THIS SHEET IT HAS BEEN ELECTRONICALLY SEALED AND DATED.

MISSOURI HIGHWAYS AND TRANSPORTATION COMMISSION
MoDOT
205 WEST CAPITOL
JEFFERSON CITY, MO 65102
1-888-ASK-MODOT (1-888-275-6636)

LEE'S SUMMIT MISSOURI

olsson
1301 BURLINGTON ST., STE. 100
NORTH KANSAS CITY, MO 64116
PHONE: 816.361.1177
CERT. OF AUTHORITY NO. 001592

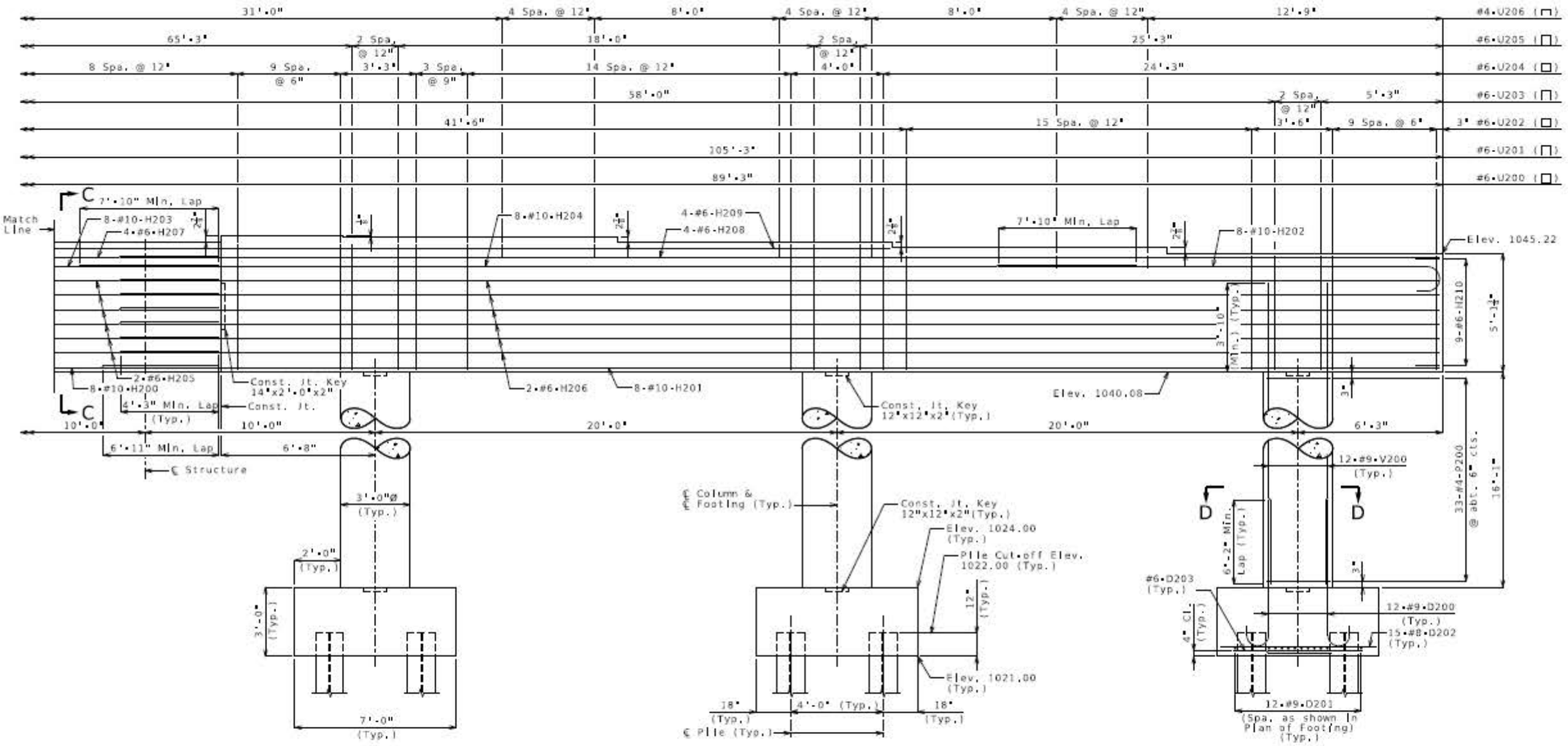

PART ELEVATION
(Beam keys not shown for clarity.)

DETAILS OF INTERMEDIATE BENT NO. 2

Notes:
Work this sheet with Sheets No. 9, 11, 12, and 13.

Detailed Oct. 2023
Checked Feb. 2024

Note: This drawing is not to scale. Follow dimensions.

Sheet No. 10 of 46

GRANT C. LUCKENBILL – ENGINEER
MO# PE-2012018100

DATE PREPARED: 2/27/2025
ROUTE: 291 | STATE: MO
DISTRICT: BR | SHEET NO.: 10
COUNTY: JACKSON
JOB NO.: J4P3196
FEDERAL PROJECT NO: STB-3001(009)
PROJECT NO.:
BRIDGE NO.: A9328

DESCRIPTION | DATE

MISSOURI HIGHWAYS AND TRANSPORTATION COMMISSION
105 WEST CAPITOL
JEFFERSON CITY, MO 65102
1-888-ASK-MODOT (1-888-275-6636)

LEE'S SUMMIT MISSOURI

olsson
1301 BURLINGTON ST., STE. 100
NORTH KANSAS CITY, MO 64116
PHONE: 816.361.1177
CERT. OF AUTHORITY NO. 001592

IF A SEAL IS PRESENT ON THIS SHEET IT HAS BEEN ELECTRONICALLY SEALED AND DATED.

F:\2021\04501-05000\021-04786\40-Design\Microstation\J4P3196\plan_sheets\16 Bridge Sheets\B_A9328_010_J4P3196_IB2_2.dgn 5:38:18 PM 2/27/2025

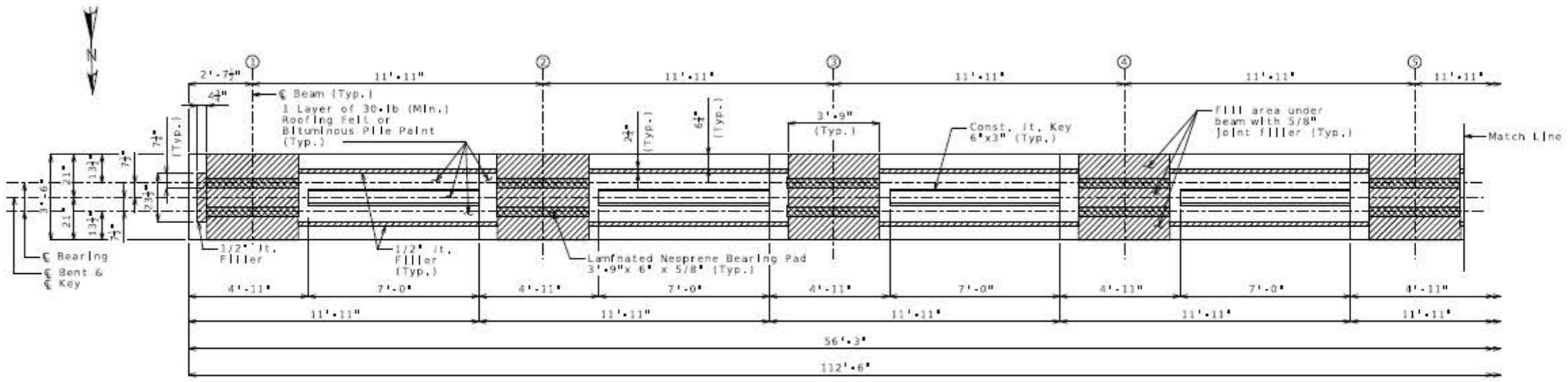

PART PLAN OF BEAM
(Footings not shown for clarity.)

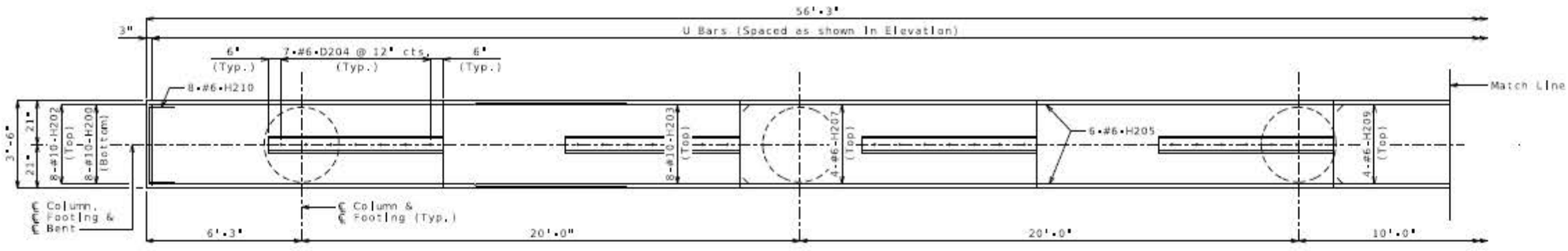

PART PLAN OF BEAM SHOWING REINFORCEMENT
(Footings not shown for clarity.)

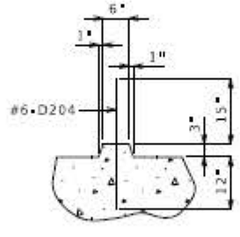

SECTION THRU KEY

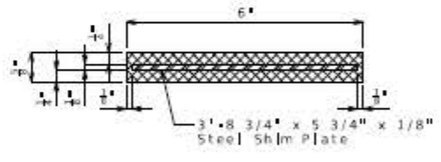

SECTION THRU LAMINATED NEOPRENE BEARING PAD

Notes:

Work this sheet with Sheets No. 9, 10, 12, and 13.

For steps 2 inches or more, use 2 1/4 x 1/2 inch joint filler up vertical face.

DETAILS OF INTERMEDIATE BENT NO. 2

Detailed Oct. 2023
Checked Feb. 2024

Note: This drawing is not to scale. Follow dimensions.

Digitally signed by Grant Luckenbill
Date: 2025.02.28 14:57:49-06'00'

GRANT C. LUCKENBILL
NUMBER PE-2012018100
2-28-25

GRANT C. LUCKENBILL - ENGINEER
MO# PE-2012018100

DATE PREPARED
2/27/2025

ROUTE	STATE
291	MO

DISTRICT	SHEET NO.
BR	11

COUNTY
JACKSON

JOB NO.
J4P3196

FEDERAL PROJECT NO.
STB-3001(009)

PROJECT NO.

BRIDGE NO.
A9328

DESCRIPTION

DATE

MISSOURI HIGHWAYS AND TRANSPORTATION COMMISSION

MoDOT

205 WEST CAPITOL
JEFFERSON CITY, MO 65102
1-888-ASK-MODOT (1-888-275-6636)

LEE'S SUMMIT MISSOURI

olsson
1301 BURLINGTON ST., STE. 100
NORTH KANSAS CITY, MO 64116
PHONE: 816.361.1177
CERT. OF AUTHORITY NO. 001592

IF A SEAL IS PRESENT ON THIS SHEET IT HAS BEEN ELECTRONICALLY SEALED AND DATED.

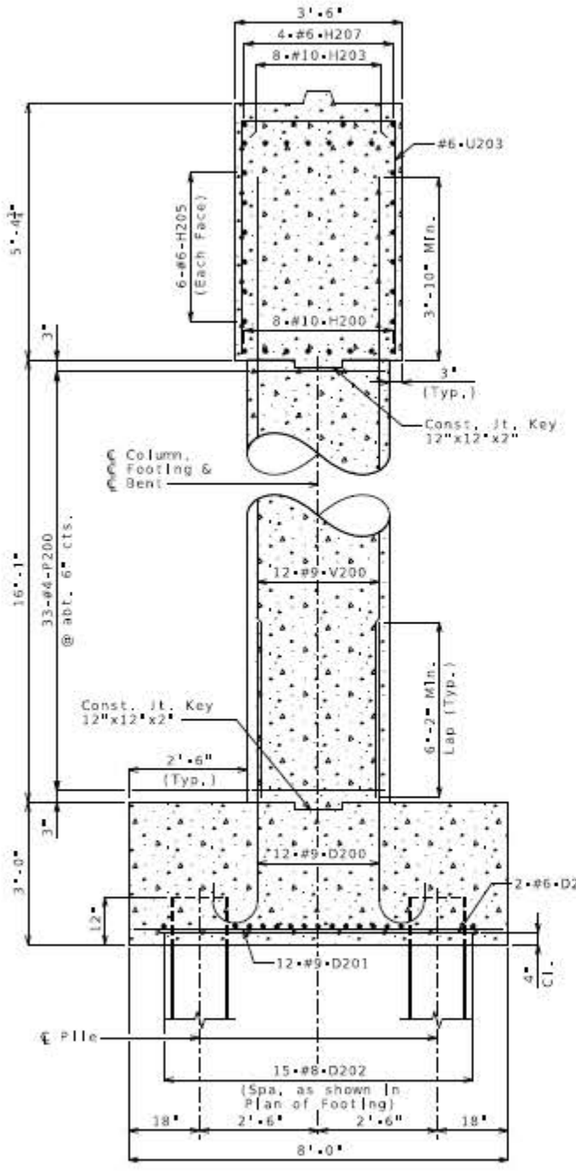

SECTION B-B

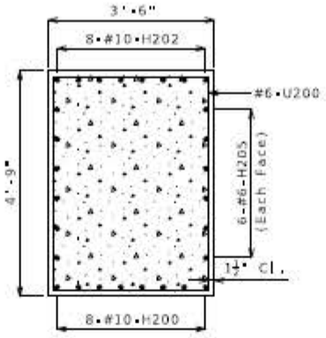

SECTION A-A

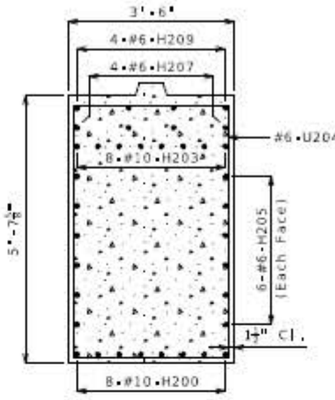

SECTION C-C

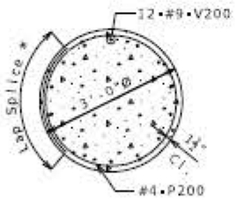

SECTION D-D

* Minimum lap 2'-10" (Stagger adjacent bar splices.)

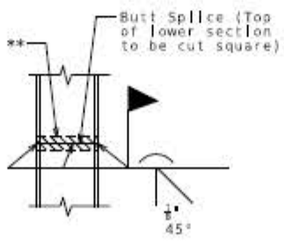

STEEL PILE SPLICE

(If required)

** Galvanizing material shall be omitted or removed one inch clear of weld locations in accordance with Sec 702.

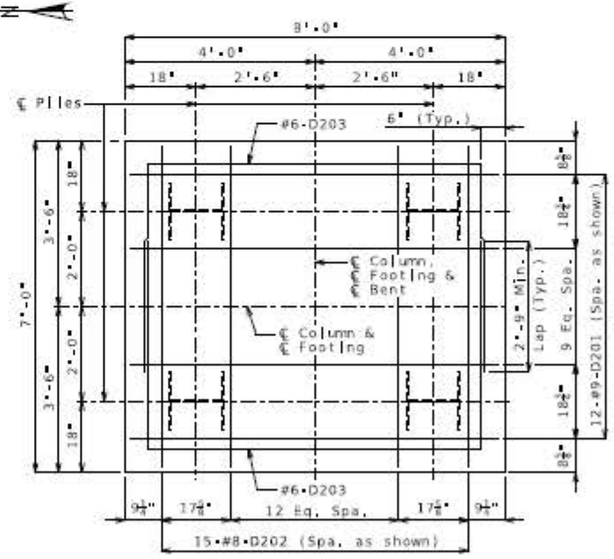

PLAN OF FOOTING

Notes:

Work this sheet with Sheets No. 9, 10, 11, and 12.

DETAILS OF INTERMEDIATE BENT NO. 2

Detailed Oct. 2023
Checked Feb. 2024

Note: This drawing is not to scale. Follow dimensions.

F:\2021\04501-05000\021-04786\40-Design\Microstation\J4P3196\plan_sheets\16 Bridge Sheets\B_A9328_013_J4P3196_IB2_S.dgn 5:39:01 PM 2/27/2025

Digitally signed by Grant Luckenbill
Date: 2025.02.28 14:57:19-06'00'

GRANT C. LUCKENBILL NUMBER PE-2012018100

GRANT C. LUCKENBILL—ENGINEER
MO# PE-2012018100

DATE PREPARED: 2/27/2025

ROUTE	STATE
291	MO
DISTRICT	SHEET NO.
BR	13

COUNTY: JACKSON

JOB NO.: J4P3196

FEDERAL PROJECT NO: STB-3001(009)

PROJECT NO.:

BRIDGE NO.: A9328

IF A SEAL IS PRESENT ON THIS SHEET IT HAS BEEN ELECTRONICALLY SEALED AND DATED.

DESCRIPTION	DATE

MISSOURI HIGHWAYS AND TRANSPORTATION COMMISSION

105 WEST CAPITOL
JEFFERSON CITY, MO 65102
1-888-ASK-MODOT (1-888-275-6636)

MoDOT

LEE'S SUMMIT MISSOURI

olsson
1301 BURLINGTON ST., STE. 100
NORTH KANSAS CITY, MO 64116
PHONE: 816.361.1177
CERT. OF AUTHORITY NO. 001592

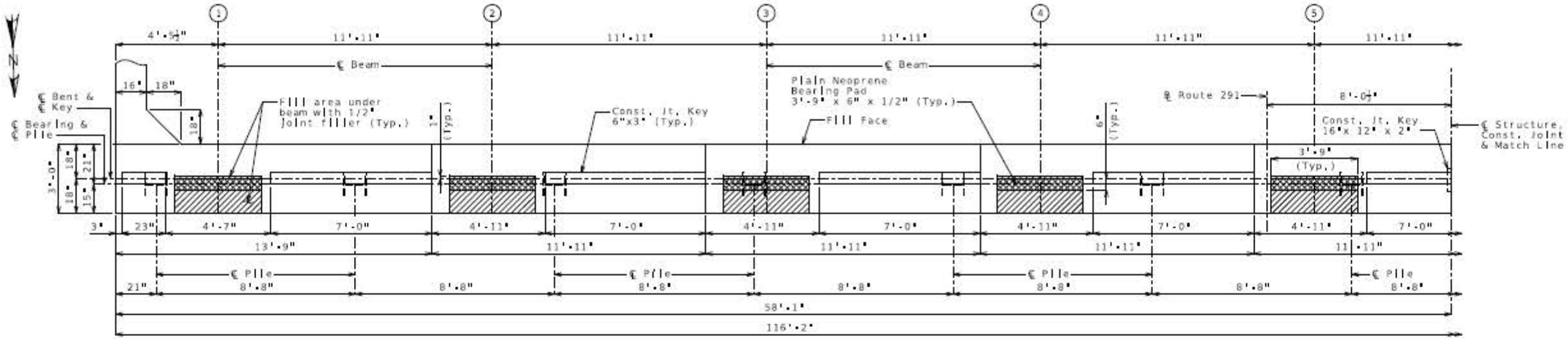

PART PLAN OF BEAM

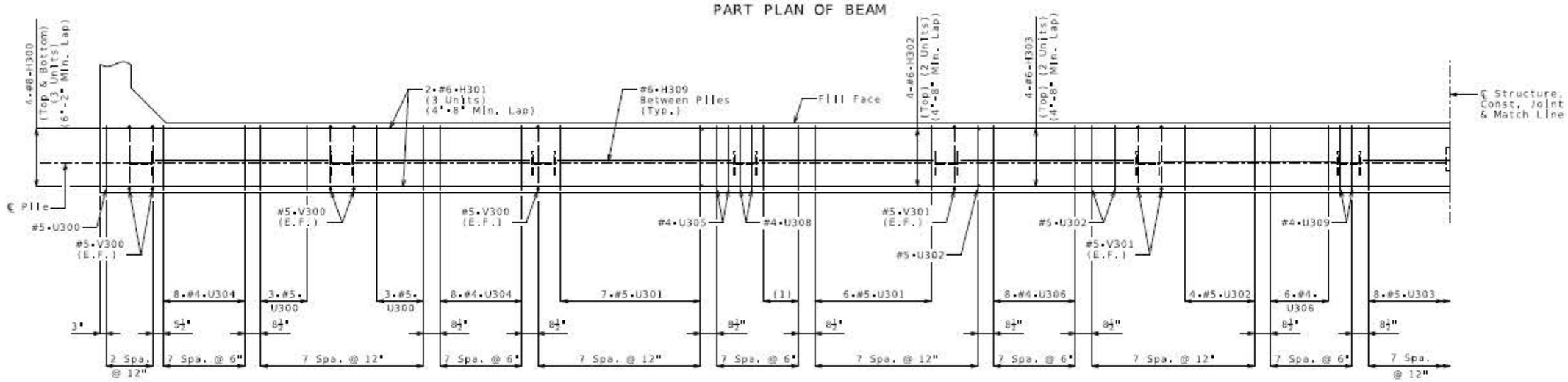

PART PLAN OF BEAM SHOWING REINFORCEMENT
(Keys and steps not shown for clarity.)
(1) 4-#5-U305

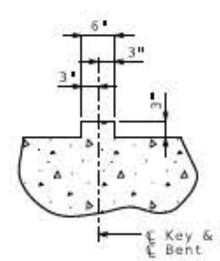

SECTION THRU KEY

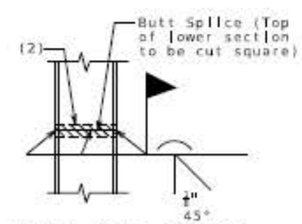

STEEL PILE SPLICE
(If required)

(2) Galvanizing material shall be omitted or removed one inch clear of weld locations in accordance with Sec 702.

Substructure Quantity Table for Bent No. 3		
Item		Quantity
Galvanized Structural Steel Piles (12 in.)	linear foot	616
Pre-Bore for Piling	linear foot	196
Pile Point Reinforcement	each	14
Class B Concrete (Substructure)	cu. yard	49.5

These quantities are included in the Estimated Quantities table on Sheet No. 2.

Notes:

Work this sheet with Sheets No. 15, 16, 17, and 18.

Reinforcing steel shall be shifted to clear piles. U bars shall clear piles by at least 1 1/2 inches.

DETAILS OF END BENT NO. 3

Detailed Oct. 2023
Checked Feb. 2024

Note: This drawing is not to scale. Follow dimensions.

Digitally signed by Grant Luckenbill
Date: 2025.02.26 14:56:19-06'00'

GRANT C. LUCKENBILL NUMBER PE-2012018100
GRANT C. LUCKENBILL-ENGINEER MO# PE-2012018100

DATE PREPARED	2/27/2025
ROUTE 291	STATE MO
DISTRICT BR	SHEET NO. 14
COUNTY	JACKSON
JOB NO.	J4P3196
FEDERAL PROJECT NO.	STB-3001(009)
PROJECT NO.	
BRIDGE NO.	A9328

DESCRIPTION

DATE

MISSOURI HIGHWAYS AND TRANSPORTATION COMMISSION

MoDOT

105 WEST CAPITOL
JEFFERSON CITY, MO 65102
1-888-ASK-MODOT (1-888-275-6636)

LEE'S SUMMIT MISSOURI

olsson

1301 BURLINGTON ST., STE. 100
NORTH KANSAS CITY, MO 64116
PHONE: 816.361.1177
CERT. OF AUTHORITY NO. 001592

IF A SEAL IS PRESENT ON THIS SHEET IT HAS BEEN ELECTRONICALLY SEALED AND DATED.

REV.

F:\2021\04501-05000\021-04786\40-Design\Microstation\J4P3196\plan_sheets\16 Bridge Sheets\B_A9328_014_J4P3196_EB3_1.dgn 5:39:05 PM 2/27/2025

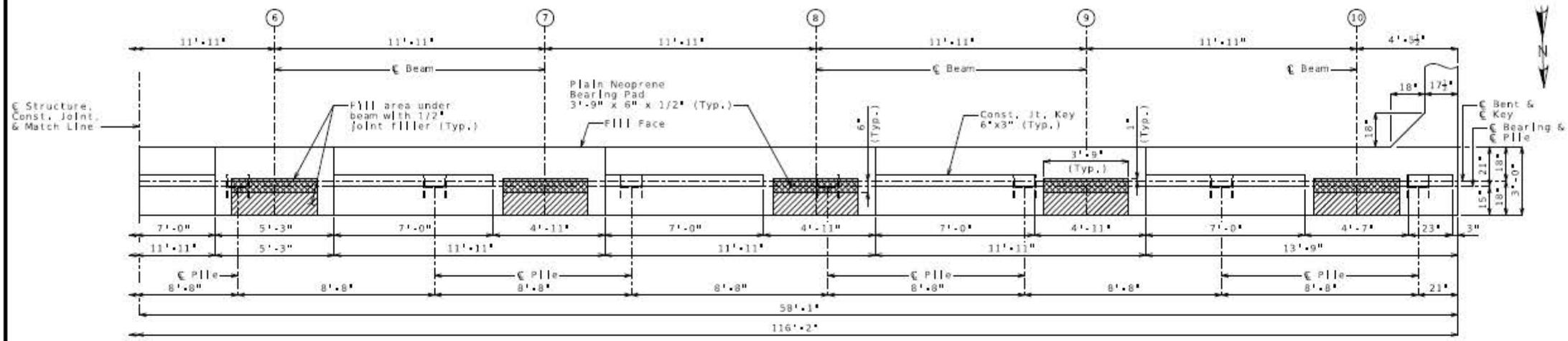

PART PLAN OF BEAM

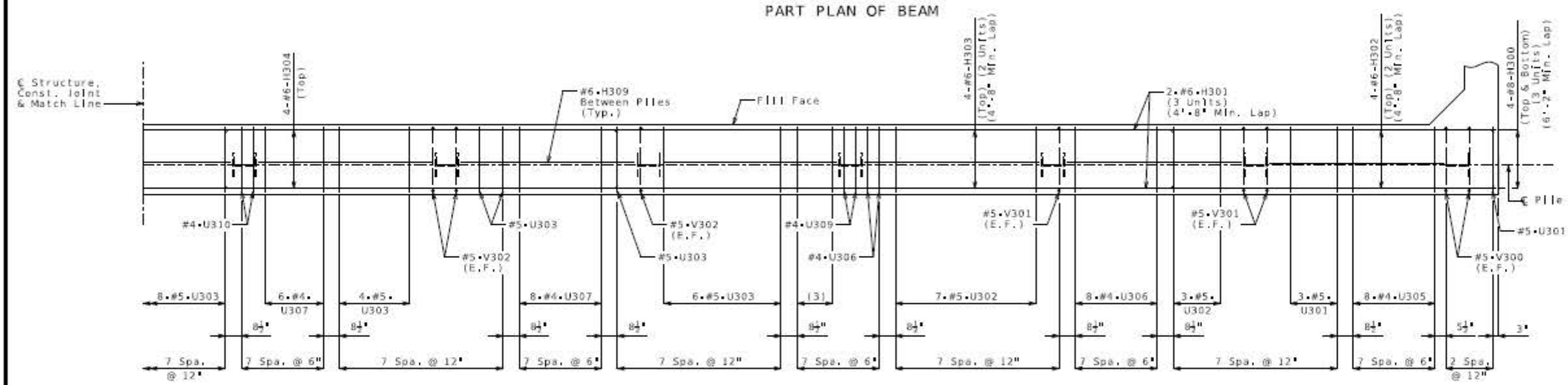

PART PLAN OF BEAM SHOWING REINFORCEMENT
(Keys and steps not shown for clarity.)
(3) 4-#5-U306

DETAILS OF END BENT NO. 3

Notes:
Work this sheet with Sheets No. 14, 16, 17, and 18.

Detailed Oct. 2023
Checked Feb. 2024

Note: This drawing is not to scale. Follow dimensions.

Sheet No. 15 of 46

Digitally signed by Grant Luckenbill
Date: 2025.02.28 14:58:27-06'00'

GRANT C. LUCKENBILL NUMBER PE-2012018100
GRANT C. LUCKENBILL-ENGINEER MO# PE-2012018100

DATE PREPARED	2/27/2025
ROUTE 291	STATE MO
DISTRICT BR	SHEET NO. 15
COUNTY	JACKSON
JOB NO.	J4P3196
FEDERAL PROJECT NO	STB-3001(009)
PROJECT NO.	
BRIDGE NO.	A9328

DATE	DESCRIPTION

MISSOURI HIGHWAYS AND TRANSPORTATION COMMISSION
MoDOT
105 WEST CAPITOL
JEFFERSON CITY, MO 65102
1-888-ASK-MODOT (1-888-275-6636)

LEE'S SUMMIT MISSOURI

olsson
1301 BURLINGTON ST., STE. 100
NORTH KANSAS CITY, MO 64116
PHONE: 816.361.1177
CERT. OF AUTHORITY NO. 001592

IF A SEAL IS PRESENT ON THIS SHEET IT HAS BEEN ELECTRONICALLY SEALED AND DATED.

REV.

F:\2021\04501-05000\021-04786\40-Design\Microstation\J4P3196\plan_sheets\16 Bridge Sheets\B_A9328_015_J4P3196_EB3_2.dgn 5:39:07 PM 2/27/2025

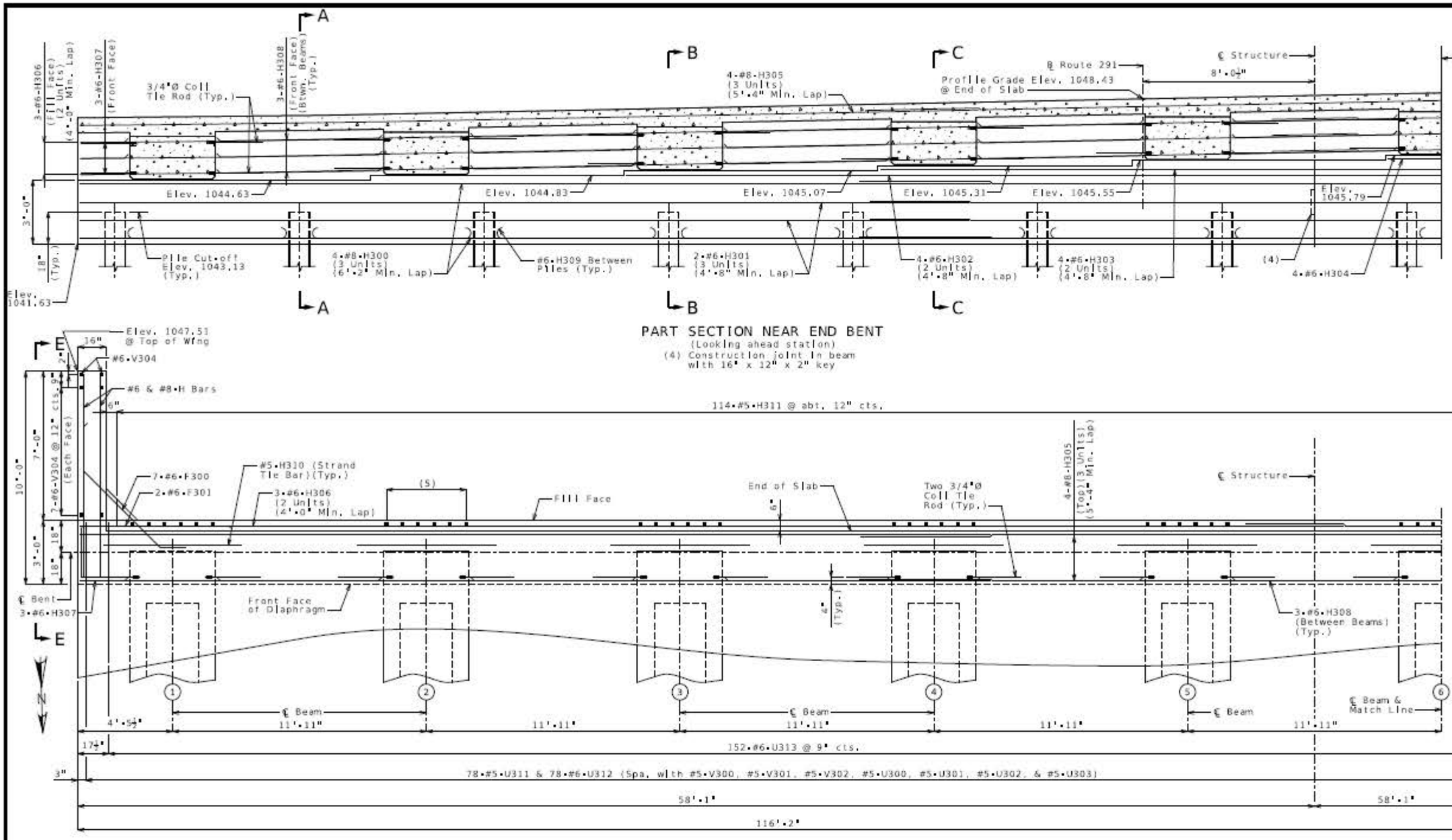

PART SECTION NEAR END BENT
(Looking ahead station)
(4) Construction joint in beam with 16" x 12" x 2" key

PART PLAN
(5) 6-#6-V303 centered behind beam @ 9" cts. (Typ.)

DETAILS OF END BENT NO. 3

Notes:

Work this sheet with Sheets No. 14, 15, 17, and 18.

For Sections A-A, B-B & C-C and Elevation E-E, see Sheet No. 18.

The #6-F300 bars shall be bent in the field to clear beams.

All concrete in the end bent above top of beam and below top of slab shall be Class B-2.

Strands at end of the beams shall be field bent or, if necessary, cut in field to maintain 1 1/2-inch minimum clearance to fill face of end bent.

For location of coil tie rods and #5-H310 (strand tie bar), see Sheet No. 19.

For details of vertical drain at end bents, see Sheet No. 8.

For details of bridge approach slab, see Sheet No. 35.

Detailed Oct. 2023
Checked Feb. 2024

Note: This drawing is not to scale. Follow dimensions.

Digitally signed by Grant Luckenbill
Date: 2025.02.28 14:58:54-06'00'

GRANT C. LUCKENBILL NUMBER PE-2012018100

GRANT C. LUCKENBILL-ENGINEER
MO# PE-2012018100

DATE PREPARED: 2/27/2025

ROUTE	STATE
291	MO
DISTRICT	SHEET NO.
BR	16

COUNTY: JACKSON
JOB NO.: J4P3196
FEDERAL PROJECT NO.: STB-3001(009)
PROJECT NO.:
BRIDGE NO.: A9328

DESCRIPTION | DATE

MISSOURI HIGHWAYS AND TRANSPORTATION COMMISSION

MoDOT

LEE'S SUMMIT MISSOURI

olsson
1301 BURLINGTON ST., STE. 100
NORTH KANSAS CITY, MO 64116
PHONE: 816.361.1177
CERT. OF AUTHORITY NO. 001592

IF A SEAL IS PRESENT ON THIS SHEET IT HAS BEEN ELECTRONICALLY SEALED AND DATED.

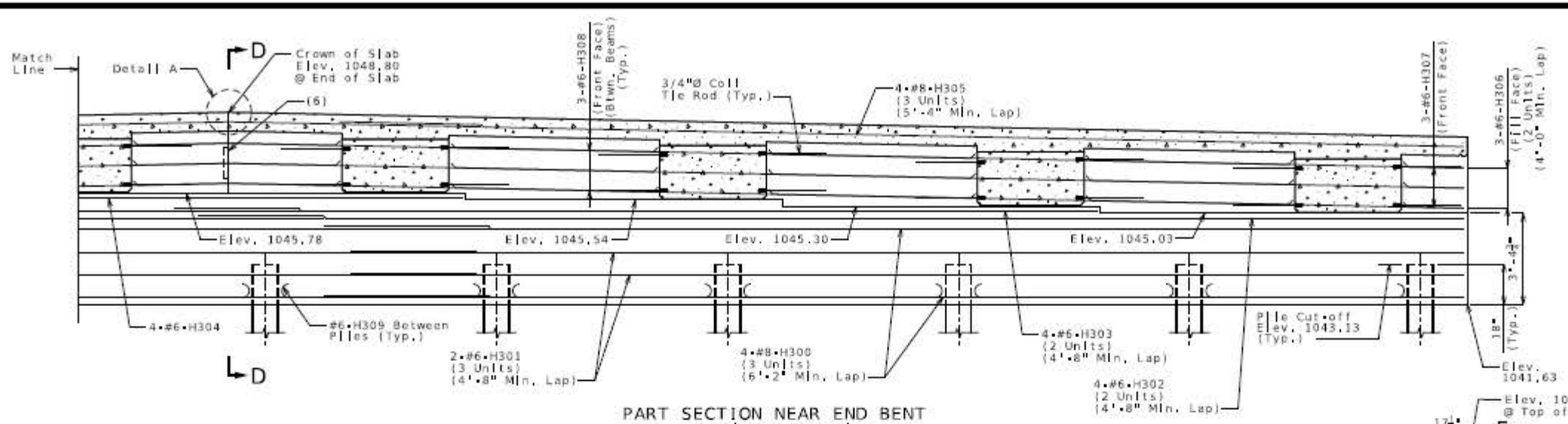

PART SECTION NEAR END BENT
(Looking ahead station)

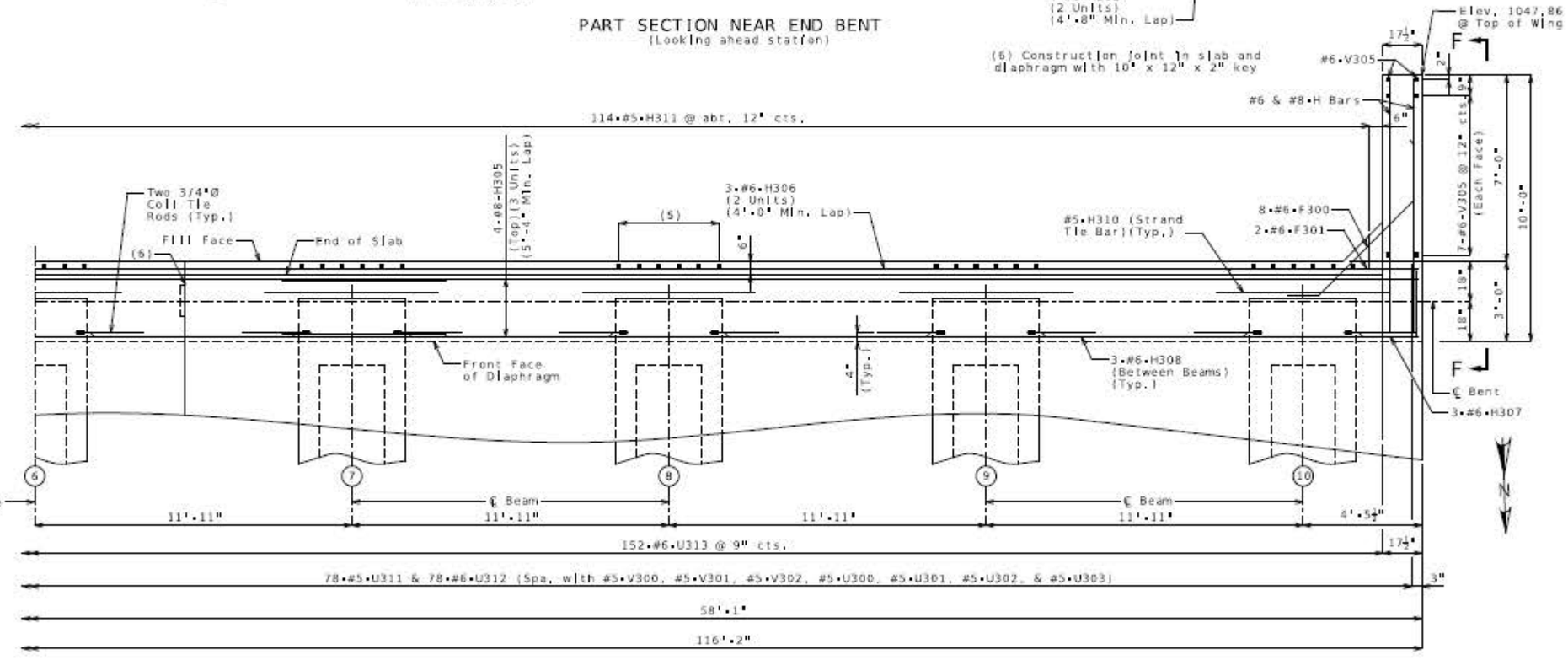

PART PLAN
(5) 6-#6-V303 centered behind beam @ 9" cts. (Typ.)

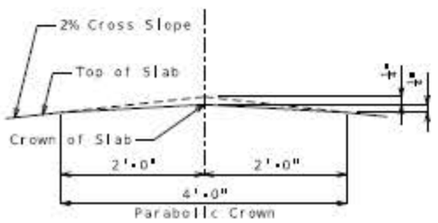

DETAIL A

Notes:
Work this sheet with Sheets No. 14, 15, 16, and 18.
For Section D-D and Elevation F-F, see Sheet No. 18.
For reinforcement of Raised Median Barrier, see Sheet No. 26.

DETAILS OF END BENT NO. 3

Detailed Oct. 2023
Checked Feb. 2024

Note: This drawing is not to scale. Follow dimensions.

GRANT C. LUCKENBILL NUMBER PE-2012018100
GRANT C. LUCKENBILL - ENGINEER
MO# PE-2012018100

DATE PREPARED 2/27/2025
ROUTE 291
STATE MO
DISTRICT BR
SHEET NO. 17
COUNTY JACKSON
JOB NO. J4P3196
FEDERAL PROJECT NO. STB-3001(009)
PROJECT NO.
BRIDGE NO. A9328

DESCRIPTION | DATE

MISSOURI HIGHWAYS AND TRANSPORTATION COMMISSION
105 WEST CAPITOL
JEFFERSON CITY, MO 65102
1-888-ASK-MODOT (1-888-275-6636)

LEE'S SUMMIT MISSOURI

olsson
1301 BURLINGTON ST., STE. 100
NORTH KANSAS CITY, MO 64116
PHONE: 816.361.1177
CERT. OF AUTHORITY NO. 001592

IF A SEAL IS PRESENT ON THIS SHEET IT HAS BEEN ELECTRONICALLY SEALED AND DATED.

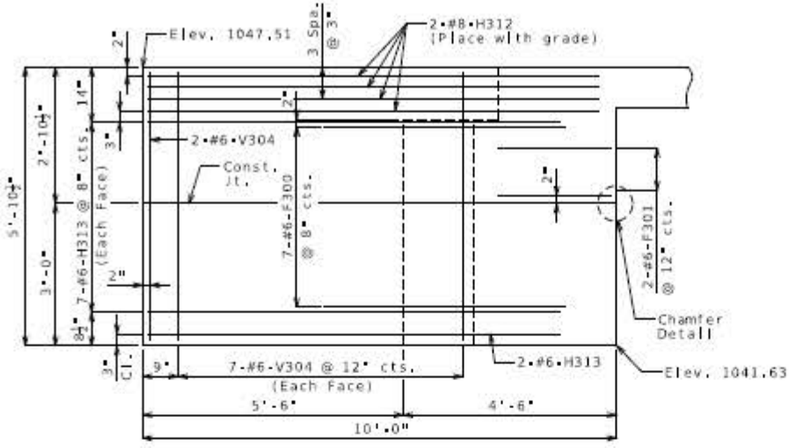

ELEVATION E-E

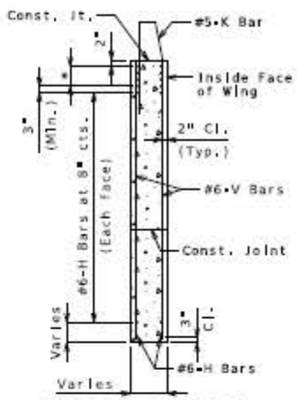

TYPICAL SECTION THRU WING

* #8-H Bars at 3" cts. (Each face)(Place with grade)

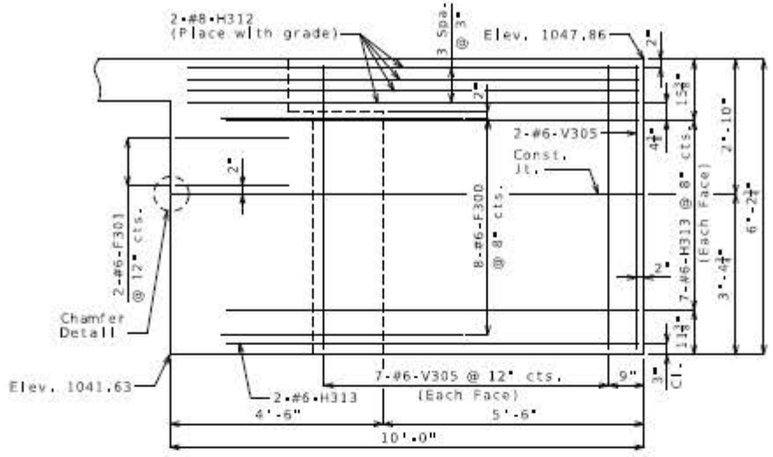

ELEVATION F-F

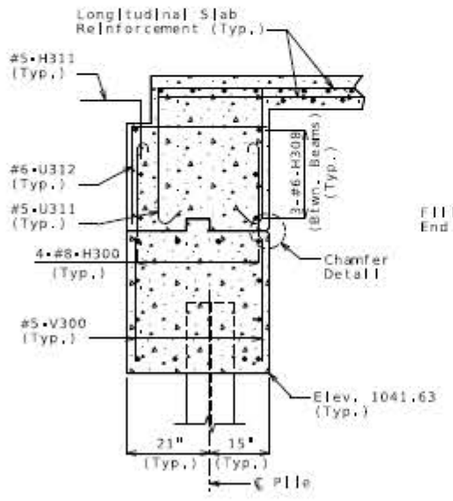

SECTION A-A

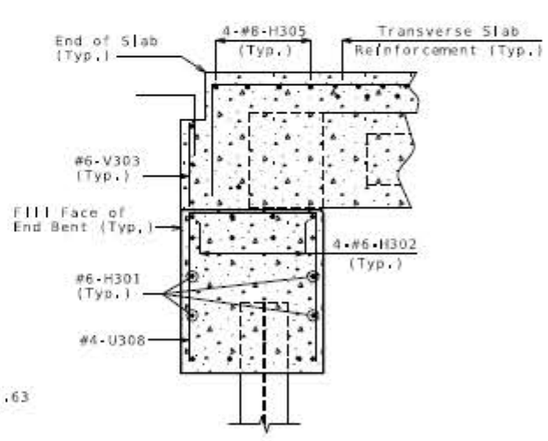

SECTION B-B

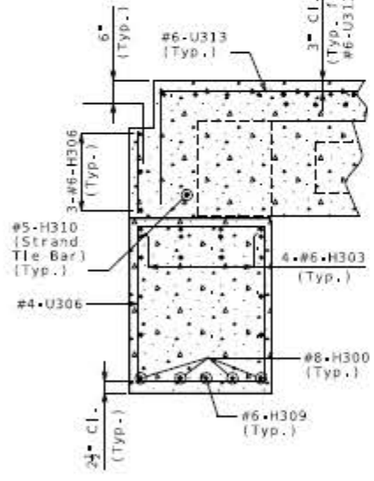

SECTION C-C

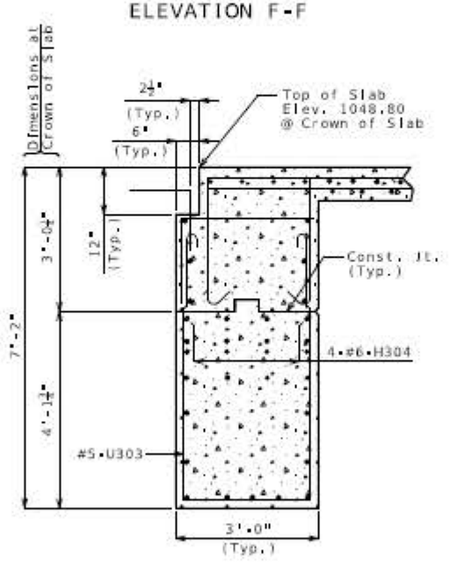

SECTION D-D

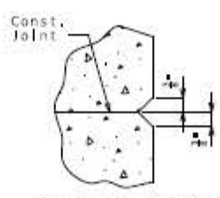

CHAMFER DETAIL

Notes:

Work this sheet with Sheets No. 14, 15, 16, and 17.

For reinforcement of the Type H Barrier, see Sheets No. 31 and 32.

For reinforcement of the Parapet Wall, see Sheet No. 28.

DETAILS OF END BENT NO. 3

Detailed Oct. 2023
Checked Feb. 2024

Note: This drawing is not to scale. Follow dimensions.

Digitally signed by Grant Luckenbill
Date: 2025.02.19 14:58:09-06'00'

GRANT C. LUCKENBILL NUMBER PE-2012018100

GRANT C. LUCKENBILL-ENGINEER MO# PE-2012018100

DATE PREPARED	2/27/2025
ROUTE 291	STATE MO
DISTRICT BR	SHEET NO. 18
COUNTY	JACKSON
JOB NO.	J4P3196
FEDERAL PROJECT NO.	STB-3001(009)
PROJECT NO.	
BRIDGE NO.	A9328

DATE	DESCRIPTION

MISSOURI HIGHWAYS AND TRANSPORTATION COMMISSION

MoDOT

105 WEST CAPITOL
JEFFERSON CITY, MO 65102
1-888-ASK-MODOT (1-888-275-6636)

LEE'S SUMMIT MISSOURI

olsson

1301 BURLINGTON ST., STE. 100
NORTH KANSAS CITY, MO 64116
PHONE: 816.361.1177
CERT. OF AUTHORITY NO. 001592

IF A SEAL IS PRESENT ON THIS SHEET IT HAS BEEN ELECTRONICALLY SEALED AND DATED.

F:\2021\04501-05000\021-04786\40-Design\Microstation\J4P3196\plan_sheets\16 Bridge Sheets\B_A9328_018_J4P3196_EB3_5.dgn 5:39:16 PM 2/27/2025

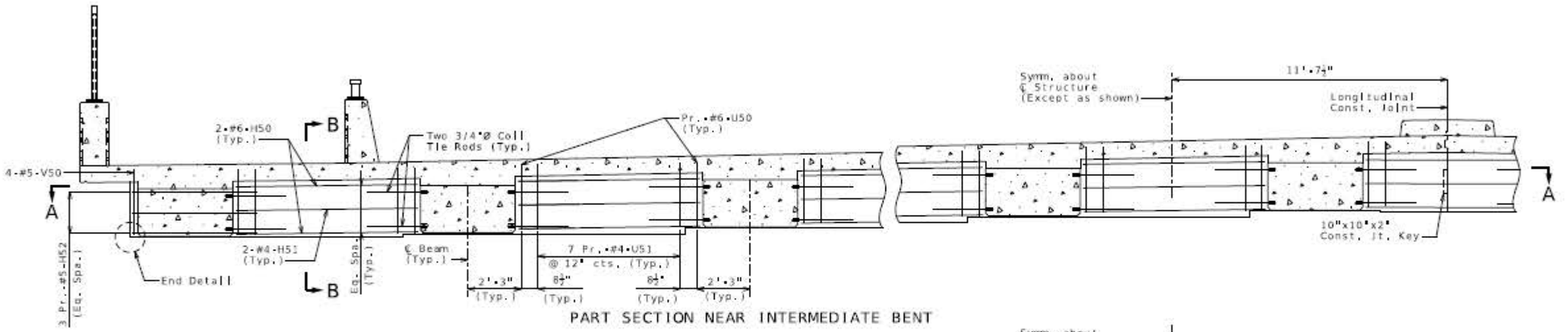

PART SECTION NEAR INTERMEDIATE BENT

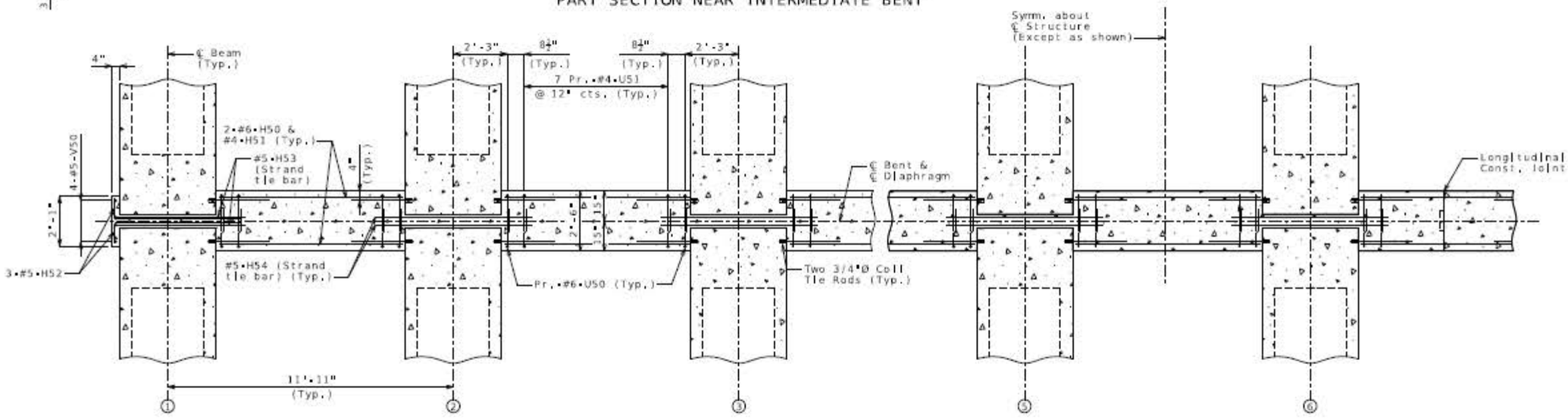

SECTION A-A

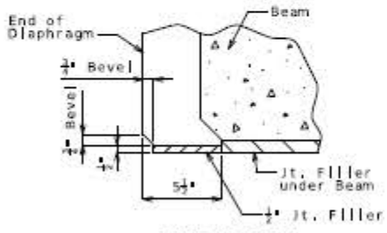

END DETAIL

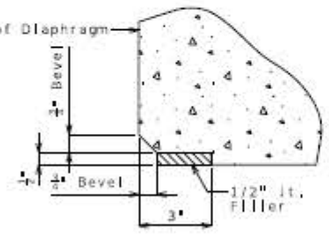

EDGE DETAIL

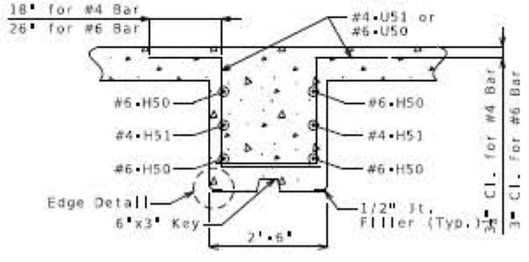

SECTION B-B

Notes:

For location of Strand Tie Bars, see Sheet No. 19.

For location and details of Coil Tie Rods, see Sheet No. 19.

Diaphragms at intermediate bents shall be built vertical.

CONCRETE DIAPHRAGMS AT INTERMEDIATE BENT NO. 2

Detailed Oct. 2023
Checked Feb. 2024

Note: This drawing is not to scale. Follow dimensions.

F:\2021\04501-05000\021-04786\40-Design(Microstation)\J4P3196\plan_sheets\16 Bridge Sheets\B_A9328_020_J4P3196_Diaphragm at Int. Bent.dgn 5:39:22 PM 2/27/2025

Digitally signed by Grant Luckenbill
Date: 2025.02.28 14:56:49 -06'00'

GRANT C. LUCKENBILL NUMBER PE-2012018103

GRANT C. LUCKENBILL–ENGINEER
MO# PE–2012018103

DATE PREPARED
2/27/2025

ROUTE	STATE
291	MO
DISTRICT	SHEET NO.
BR	20

COUNTY
JACKSON

JOB NO.
J4P3196

FEDERAL PROJECT NO.
STB-3001(009)

PROJECT NO.

BRIDGE NO.
A9328

DESCRIPTION	DATE

IF A SEAL IS PRESENT ON THIS SHEET IT HAS BEEN ELECTRONICALLY SEALED AND DATED.

MISSOURI HIGHWAYS AND TRANSPORTATION COMMISSION

MoDOT

105 WEST CAPITOL
JEFFERSON CITY, MO 65102
1-888-ASK-MODOT (1-888-275-6636)

LEE'S SUMMIT MISSOURI

olsson
1301 BURLINGTON ST., STE. 100
NORTH KANSAS CITY, MO 64116
PHONE: 816.361.1177
CERT. OF AUTHORITY NO. 001592

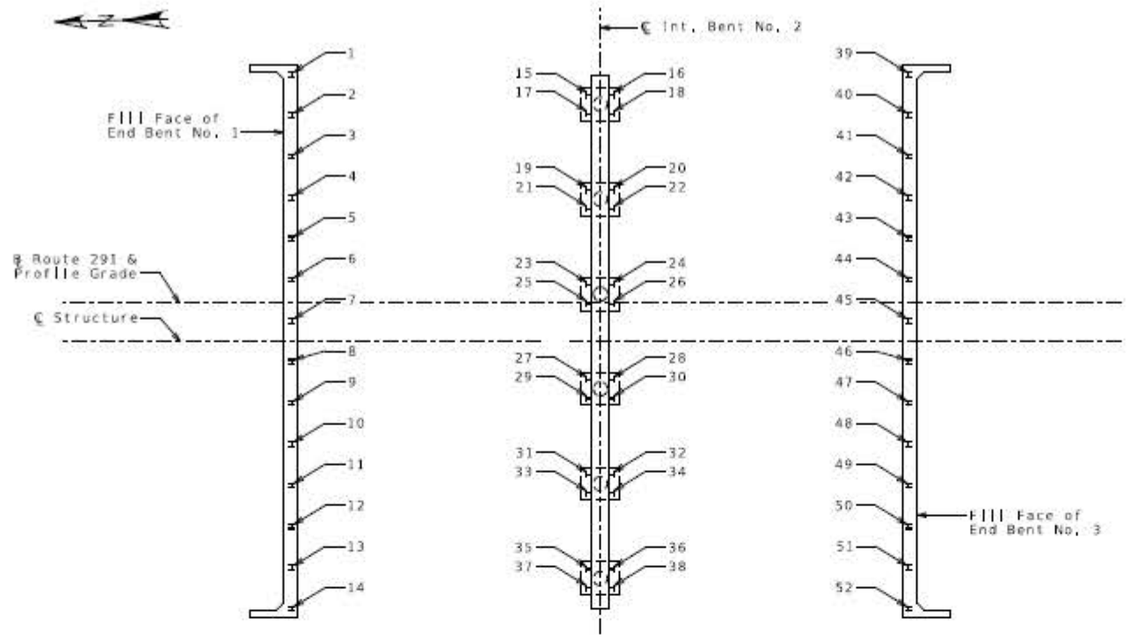

PART PLAN SHOWING PILE NUMBERING
FOR RECORDING AS-BUILT PILE DATA

As-Built Pile Data			
Pile No.	Length In Place (ft.)	Computed Nominal Axial Compressive Resistance (kips)	Remarks
			End Bent No. 1
1			
2			
3			
4			
5			
6			
7			
8			
9			
10			
11			
12			
13			
14			

As-Built Pile Data			
Pile No.	Length In Place (ft.)	Computed Nominal Axial Compressive Resistance (kips)	Remarks
			Int. Bent No. 2
15			
16			
17			
18			
19			
20			
21			
22			
23			
24			
25			
26			
27			
28			
29			
30			
31			
32			
33			
34			
35			
36			
37			
38			

As-Built Pile Data			
Pile No.	Length In Place (ft.)	Computed Nominal Axial Compressive Resistance (kips)	Remarks
			End Bent No. 3
39			
40			
41			
42			
43			
44			
45			
46			
47			
48			
49			
50			
51			
52			

Note:
Indicate in remarks column:
A. Pile type and grade
B. Batter
C. Driven to practical refusal

This sheet to be completed by construction personnel.

AS-BUILT PILE DATA

Detailed Oct. 2023
Checked Feb. 2024

Note: This drawing is not to scale. Follow dimensions.

GRANT C. LUCKENBILL - ENGINEER
MO# PE-2012019100

DATE PREPARED
2/27/2025

ROUTE	STATE
291	MO
DISTRICT	SHEET NO.
BR	39

COUNTY
JACKSON

JOB NO.
J4P3196

FEDERAL PROJECT NO
STB-3001(009)

PROJECT NO.

BRIDGE NO.
A9328

DESCRIPTION	DATE

MISSOURI HIGHWAYS AND TRANSPORTATION COMMISSION
MoDOT
205 WEST CAPITOL
JEFFERSON CITY, MO 65102
1-888-ASK-MODOT (1-888-275-6636)

LEE'S SUMMIT MISSOURI

olsson
1301 BURLINGTON ST., STE. 100
NORTH KANSAS CITY, MO 64116
PHONE: 816.361.1177
CERT. OF AUTHORITY NO. 001592

REV.

IF A SEAL IS PRESENT ON THIS SHEET IT HAS BEEN ELECTRONICALLY SEALED AND DATED.

olsson | **BOREHOLE REPORT NO. BB-1** | **Sheet 1 of 2**

PROJECT NAME: Lee's Summit M291 Interchange Hwy 50
CLIENT: Missouri Department of Transportion
PROJECT NUMBER: 021-04786
LOCATION: Lee's Summit, Missouri

Shelby Tube ☒ Split Spoon ■ Rock Core

: X: 0 Y: 110

APPROX. SURFACE ELEV. (ft): 1028

ELEVATION (ft)	MATERIAL DESCRIPTION	GRAPHIC LOG	DEPTH (ft)	SAMPLE TYPE NUMBER	CLASSIFICATION (USCS)	BLOWS/6" N-VALUE	UNC. STR. (tsf)	MOISTURE (%)	DRY DENSITY (pcf)	LL/PI (%)	ADDITIONAL DATA/ REMARKS
	0		0								
	ASPHALT 0.3'										
	Thickness of 3"										
	CONCRETE 1.0'										
	Thickness of 9"			U 1				28.4	97.8		PP = 3.5 tsf
1025	**LEAN TO FAT CLAY**										
	Very stiff to hard, grayish brown and yellowish brown, moist, trace sand, silty			U 2				24.7	102.4		PP = 4.25 tsf
			5								
	7.0'										
1020	*Grades to dry, shaley*			U 3				16.9	112.4		PP = 4.5+ tsf
			10								
	12.0'										
1015	**WEATHERED SHALE**										
	Yellowish brown, silty, trace sand - Chanute Shale Formation			SS 4		12-50/5.5"		13.9			
			15								
	▽										
1010				SS 5		50/5"		11.9			
			20								

CONTINUED NEXT PAGE

WATER LEVEL OBSERVATIONS	
WD	▽ 16.0 ft
IAD	▼ Not Perfcrmed
AD	▼ Not Perfcrmed

OLSSON, INC.
1700 E. 123RD STREET
OLATHE, KANSAS 66061

STARTED:	12/13/22	FINISHED:	12/13/22
DRILL CO.:	OLSSON	DRILL RIG:	CME 550X
DRILLER:	D. LUDWIG	LOGGED BY:	E. CRISP
METHOD:	HOLLOW STEM AUGER / ROCK CORE		

olsson | **BOREHOLE REPORT NO. BB-1** | **Sheet 2 of 2**

PROJECT NAME: Lee's Summit M291 Interchange Hwy 50
CLIENT: Missouri Department of Transportion
PROJECT NUMBER: 021-04786
LOCATION: Lee's Summit, Missouri

Shelby Tube ☒ Split Spoon ■ Rock Core

ELEVATION (ft)	MATERIAL DESCRIPTION	GRAPHIC LOG	DEPTH (ft)	SAMPLE TYPE NUMBER	CLASSIFICATION (USCS)	BLOWS/6" N-VALUE	UNC. STR. (tsf)	MOISTURE (%)	DRY DENSITY (pcf)	LL/PI (%)	ADDITIONAL DATA/ REMARKS
	20		20								
	WEATHERED SHALE										
	Yellowish brown, silty, trace sand - Chanute Shale Formation (continued)										
	22.0'										
1005	*Grades to gray, sandy - Chanute Shale Formation*			SS 6		50/4"		9.6			
			25								
1000				SS 7		50/3"		10.1			
	30.0'		30								
	SANDSTONE										
	Gray - Chanute Shale Formation			RC 8							Recovery 100.0% RQD 47.5%
995			35								
990				RC 9			466.0 222.0				Recovery 100.0% RQD 66.7%
	40.0'		40								

BASE OF BORING AT 40.0 FEET

WATER LEVEL OBSERVATIONS	
WD	▽ 16.0 ft
IAD	▼ Not Performed
AD	▼ Not Performed

OLSSON, INC.
1700 E. 123RD STREET
OLATHE, KANSAS 66061

STARTED:	12/13/22	FINISHED:	12/13/22
DRILL CO.:	OLSSON	DRILL RIG:	CME 550X
DRILLER:	D. LUDWIG	LOGGED BY:	E. CRISP
METHOD:	HOLLOW STEM AUGER / ROCK CORE		

GRANT C. LUCKENBILL NUMBER PE-2012018100 2-28-25
GRANT C. LUCKENBILL–ENGINEER
MO# PE–2012018100

DATE PREPARED: 2/27/2025
ROUTE: 291 | STATE: MO
DISTRICT: BR | SHEET NO.: 40
COUNTY: JACKSON
JOB NO.: J4P3196
FEDERAL PROJECT NO: STB-3001(009)
PROJECT NO.
BRIDGE NO.: A9328

DESCRIPTION | DATE

MISSOURI HIGHWAYS AND TRANSPORTATION COMMISSION
105 WEST CAPITOL
JEFFERSON CITY, MO 65102
1-888-ASK-MODOT (1-888-275-6636)

LEE'S SUMMIT MISSOURI

olsson
1301 N. ST., STE. 100
JEFFERSON CITY, MO 64116
PHONE: 573.361.1177
CERTIFICATE OF AUTHORITY NO. 001592

IF A SEAL IS PRESENT ON THIS SHEET IT HAS BEEN ELECTRONICALLY SEALED AND

olsson | **BOREHOLE REPORT NO. BB-2** | **Sheet 1 of 2**

PROJECT NAME: Lee's Summit M291 Interchange Hwy 50
CLIENT: Missouri Department of Transportion
PROJECT NUMBER: 021-04786
LOCATION: Lee's Summit, Missouri

Shelby Tube ☒ Split Spoon ■ Rock Core

ELEVATION (ft)	MATERIAL DESCRIPTION	GRAPHIC LOG	DEPTH (ft)	SAMPLE TYPE NUMBER	CLASSIFICATION (USCS)	BLOWS/6" N-VALUE	UNC. STR. (tsf)	MOISTURE (%)	DRY DENSITY (pcf)	LL/PI (%)	ADDITIONAL DATA/ REMARKS
	: X: 80 Y: 110										
	APPROX. SURFACE ELEV. (ft): 1028		0								
	ASPHALT 0.3'										
	Thickness of 3"										
	CONCRETE 1.0'										
	Thickness of 9"			U 1				16.2	113.2		PP = 4.5 tsf
1025	**LEAN TO FAT CLAY**										
	Hard, grayish brown and yellowish brown, moist, some sand, silty			U 2				13.3			PP = 4.5+ tsf
	7.0'		5								
1020	Grades to dry, shaley										
	12.0'			U 3				14.3	111.0		PP = 4.5+ tsf
	WEATHERED SHALE		10								
1015	Yellowish brown, silty, trace sand - Chanute Shale Formation										
	▽			SS 4		15-32-50/4"		13.6			
			15								
1010											
				SS 5		50/5.5"		11.4			
			20								

CONTINUED NEXT PAGE

WATER LEVEL OBSERVATIONS	
WD	▽ 14.0 ft
IAD	▼ Not Performed
AD	▼ Not Performed

OLSSON, INC.
1700 E. 123RD STREET
OLATHE, KANSAS 66061

STARTED:	12/13/22	FINISHED:	12/13/22
DRILL CO.:	OLSSON	DRILL RIG:	CME 550X
DRILLER:	D. LUDWIG	LOGGED BY:	E. CRISP
METHOD:	HOLLOW STEM AUGER / ROCK CORE		

olsson | **BOREHOLE REPORT NO. BB-2** | **Sheet 2 of 2**

PROJECT NAME: Lee's Summit M291 Interchange Hwy 50
CLIENT: Missouri Department of Transportion
PROJECT NUMBER: 021-04786
LOCATION: Lee's Summit, Missouri

Shelby Tube ☒ Split Spoon ■ Rock Core

ELEVATION (ft)	MATERIAL DESCRIPTION	GRAPHIC LOG	DEPTH (ft)	SAMPLE TYPE NUMBER	CLASSIFICATION (USCS)	BLOWS/6" N-VALUE	UNC. STR. (tsf)	MOISTURE (%)	DRY DENSITY (pcf)	LL/PI (%)	ADDITIONAL DATA/ REMARKS
	WEATHERED SHALE		20								
	Yellowish brown, silty, trace sand - Chanute Shale Formation (continued)										
	22.0'										
1005	Grades to gray, sandy - Chanute Shale Formation			SS 6		50/4"		9.5			
			25								
1000				SS 7		50/3"		9.7			
	30.0'		30								
	SANDSTONE										
	Gray - Chanute Shale Formation			RC 8							Recovery 100.0% RQD 54.2%
995			35								
				RC 9				76.0			Recovery 100.0% RQD 64.2%
990											
	40.0'		40								

BASE OF BORING AT 40.0 FEET

WATER LEVEL OBSERVATIONS	
WD	▽ 14.0 ft
IAD	▼ Not Performed
AD	▼ Not Performed

OLSSON, INC.
1700 E. 123RD STREET
OLATHE, KANSAS 66061

STARTED:	12/13/22	FINISHED:	12/13/22
DRILL CO.:	OLSSON	DRILL RIG:	CME 550X
DRILLER:	D. LUDWIG	LOGGED BY:	E. CRISP
METHOD:	HOLLOW STEM AUGER / ROCK CORE		

GRANT C. LUCKENBILL NUMBER PE-2012018100 2-28-25
GRANT C. LUCKENBILL–ENGINEER
MO# PE–2012018100

DATE PREPARED: 2/27/2025
ROUTE: 291 | STATE: MO
DISTRICT: BR | SHEET NO.: 41
COUNTY: JACKSON
JOB NO.: J4P3196
FEDERAL PROJECT NO: STB-3001(009)
PROJECT NO.
BRIDGE NO.: A9328

DESCRIPTION | DATE

IF A SEAL IS PRESENT ON THIS SHEET IT HAS BEEN ELECTRONICALLY SEALED AND

MISSOURI HIGHWAYS AND TRANSPORTATION COMMISSION
105 WEST CAPITOL
JEFFERSON CITY, MO 65102
1-888-ASK-MODOT (1-888-275-6636)

LEE'S SUMMIT MISSOURI

olsson
N. ST., STE. 100
CITY, MO 64116
6.361.1177
RITY NO. 001592

olsson | **BOREHOLE REPORT NO. BB-3** | **Sheet 1 of 3**

PROJECT NAME: **Lee's Summit M291 Interchange Hwy 50**
CLIENT: **Missouri Department of Transportion**
PROJECT NUMBER: **021-04786**
LOCATION: **Lee's Summit, Missouri**

Shelby Tube ☒ Split Spoon ■ Rock Core

ELEVATION (ft)	MATERIAL DESCRIPTION	GRAPHIC LOG	DEPTH (ft)	SAMPLE TYPE NUMBER	CLASSIFICATION (USCS)	BLOWS/6" N-VALUE	UNC. STR. (tsf)	MOISTURE (%)	DRY DENSITY (pcf)	LL/PI (%)	ADDITIONAL DATA/ REMARKS
	: X: 0 Y: 45 **APPROX. SURFACE ELEV. (ft):** 1028		0								
	CONCRETE										
	Thickness of 12" — **1.0'**										
	LEAN TO FAT CLAY										
1025	*Stiff, yellowish brown, moist, trace sand and trace fine gravel*			U 1				27.9	95.5		PP = 3.25 tsf
	▽		5	U 2				25.9	99.2		PP = 4.25 tsf
	7.0'										
1020	*Grades to hard, dry, shaley*										
			10	U 3				14.6	111.2		PP = 4.5+ tsf
1015											
			15	U 4				17.8	105.3		PP = 4.5+ tsf
	17.0'										
	WEATHERED SHALE										
1010	▽ *Yellowish brown, silty, trace sand – Chanute Shale Formation*										
			20	SS 5		50/5.5"		12.0			

CONTINUED NEXT PAGE

WATER LEVEL OBSERVATIONS	
WD	▽ 18.0 ft
IAD	▼ Not Encountered
AD	▼ 3.5 f: after 24Hrs

OLSSON, INC.
1700 E. 123RD STREET
OLATHE, KANSAS 66061

STARTED:	11/29/22	FINISHED:	11/29/22
DRILL CO.:	OLSSON	DRILL RIG:	CME 550X
DRILLER:	D. LUDWIG	LOGGED BY:	E. CRISP
METHOD:	HOLLOW STEM AUGER / ROCK CORE		

olsson | **BOREHOLE REPORT NO. BB-3** | **Sheet 2 of 3**

PROJECT NAME: **Lee's Summit M291 Interchange Hwy 50**
CLIENT: **Missouri Department of Transportion**
PROJECT NUMBER: **021-04786**
LOCATION: **Lee's Summit, Missouri**

Shelby Tube ☒ Split Spoon ■ Rock Core

ELEVATION (ft)	MATERIAL DESCRIPTION	GRAPHIC LOG	DEPTH (ft)	SAMPLE TYPE NUMBER	CLASSIFICATION (USCS)	BLOWS/6" N-VALUE	UNC. STR. (tsf)	MOISTURE (%)	DRY DENSITY (pcf)	LL/PI (%)	ADDITIONAL DATA/ REMARKS
	WEATHERED SHALE		20								
	Yellowish brown, silty, trace sand - Chanute Shale Formation (continued)										
1005	**23.0'**										
	Grades to gray, sandy - Chanute Shale Formation			SS 6		50/5.5"		10.4			
			25								
1000				SS 7		50/4"		10.1			
	30.0'		30								
	SANDSTONE										
	Gray - Chanute Shale Formation			RC 8			152.0				Recovery 88.3% RQD 88.3%
995			35								
990				RC 9			123.0				Recovery 100.0% RQD 73.3%
			40								

CONTINUED NEXT PAGE

WATER LEVEL OBSERVATIONS	
WD	▽ 18.0 ft
IAD	▼ Not Encountered
AD	▼ 3.5 ft after 24Hrs

OLSSON, INC.
1700 E. 123RD STREET
OLATHE, KANSAS 66061

STARTED:	11/29/22	FINISHED:	11/29/22
DRILL CO.:	OLSSON	DRILL RIG:	CME 550X
DRILLER:	D. LUDWIG	LOGGED BY:	E. CRISP
METHOD:	HOLLOW STEM AUGER / ROCK CORE		

GRANT C. LUCKENBILL – NUMBER PE-2012018100 – 2-28-25 – GRANT C. LUCKENBILL – ENGINEER – MO# PE-2012018100

DATE PREPARED: 2/27/2025
ROUTE: 291 | STATE: MO
DISTRICT: BR | SHEET NO.: 42
COUNTY: JACKSON
JOB NO.: J4P3196
FEDERAL PROJECT NO: STB-3001(009)
PROJECT NO.:
BRIDGE NO.: A9328

DESCRIPTION | DATE

MISSOURI HIGHWAYS AND TRANSPORTATION COMMISSION
105 WEST CAPITOL
JEFFERSON CITY, MO 65102
1-888-ASK-MODOT (1-888-275-6636)

LEE'S SUMMIT MISSOURI

olsson
ST., STE. 100
CITY, MO 64116
816.361.1177
CERTIFICATE NO. 001592

IF A SEAL IS PRESENT ON THIS SHEET IT HAS BEEN ELECTRONICALLY SEALED AN

olsson

BOREHOLE REPORT NO. BB-3

Sheet 3 of 3

PROJECT NAME: Lee's Summit M291 Interchange Hwy 50
CLIENT: Missouri Department of Transportion
PROJECT NUMBER: 021-04786
LOCATION: Lee's Summit, Missouri

Shelby Tube | Split Spoon | Rock Core

ELEVATION (ft)	MATERIAL DESCRIPTION	GRAPHIC LOG	DEPTH (ft)	SAMPLE TYPE NUMBER	CLASSIFICATION (USCS)	BLOWS/6" N-VALUE	UNC. STR. (tsf)	MOISTURE (%)	DRY DENSITY (pcf)	LL/PI (%)	ADDITIONAL DATA/ REMARKS
			40								
	SANDSTONE *Gray -* *Chanute Shale Formation (continued)*										
	42.0'										
	SHALE *Gray, sandy -* *Liberty Memorial Shale Formation*		45	RC 10							Recovery 93.3% RQD 36.7%
985											
	46.0'										
	LIMESTONE *Light bluish-gray -* *Drum Limestone Formation*			RC 11			394.0 530.0				Recovery 98.3% RQD 73.3%
980											
	50.0'		50								
	SHALE *Gray -* *Cherrywale Shale Formation*			RC 12							Recovery 95.0% RQD 61.7%
975			55								
				RC 13							Recovery 100.0% RQD 86.7%
970											
	60.0'		60								
	BASE OF BORING AT 60.0 FEET										

WATER LEVEL OBSERVATIONS	
WD	▽ 18.0 ft
IAD	▼ Not Encountered
AD	▼ 3.5 ft. after 24Hrs

OLSSON, INC.
1700 E. 123RD STREET
OLATHE, KANSAS 66061

STARTED:	11/29/22	FINISHED:	11/29/22
DRILL CO.:	OLSSON	DRILL RIG:	CME 550X
DRILLER:	D. LUDWIG	LOGGED BY:	E. CRISP
METHOD:	HOLLOW STEM AUGER / ROCK CORE		

olsson

BOREHOLE REPORT NO. BB-4

Sheet 1 of 3

PROJECT NAME: Lee's Summit M291 Interchange Hwy 50
CLIENT: Missouri Department of Transportion
PROJECT NUMBER: 021-04786
LOCATION: Lee's Summit, Missouri

Shelby Tube | Split Spoon | Rock Core

: X: 80 Y: 45

APPROX. SURFACE ELEV. (ft): 1028

ELEVATION (ft)	MATERIAL DESCRIPTION	GRAPHIC LOG	DEPTH (ft)	SAMPLE TYPE NUMBER	CLASSIFICATION (USCS)	BLOWS/6" N-VALUE	UNC. STR. (tsf)	MOISTURE (%)	DRY DENSITY (pcf)	LL/PI (%)	ADDITIONAL DATA/ REMARKS
			0								
	CONCRETE *Thickness of 12"*										
	1.0'										
	LEAN TO FAT CLAY *Very stiff, yellowish brown, moist*			U 1				21.7	106.7		PP = 4.5+ tsf
1025											
			5	U 2				17.5	114.9		PP = 4.5+ tsf
	7.0'										
	Grades to hard, dry, shaley, silty, trace sand										
1020											
			10	U 3				14.5	114.4		PP = 4.5+ tsf
1015											
			15	U 4				18.1	107.9		PP = 4.5+ tsf
	▽										
	17.0'										
	WEATHERED SHALE *Yellowish brown, grayish brown -* *Chanute Shale Formation*			SS 5		50/5.5"		12.3			
1010			20								
	CONTINUED NEXT PAGE										

WATER LEVEL OBSERVATIONS	
WD	▽ 16.0 ft
IAD	▼ Not Encountered
AD	▼ Not Encountered

OLSSON, INC.
1700 E. 123RD STREET
OLATHE, KANSAS 66061

STARTED:	11/30/22	FINISHED:	11/30/22
DRILL CO.:	OLSSON	DRILL RIG:	CME 550X
DRILLER:	D. LUDWIG	LOGGED BY:	E. CRISP
METHOD:	HOLLOW STEM AUGER / ROCK CORE		

GRANT C. LUCKENBILL NUMBER PE-2012018100 7-28-25
GRANT C. LUCKENBILL–ENGINEER MO# PE–2012018100

DATE PREPARED: 2/27/2025
ROUTE: 291 | STATE: MO
DISTRICT: BR | SHEET NO.: 43
COUNTY: JACKSON
JOB NO.: J4P3196
FEDERAL PROJECT NO: STB-3001(009)
PROJECT NO.:
BRIDGE NO.: A9328

DESCRIPTION | DATE

MISSOURI HIGHWAYS AND TRANSPORTATION COMMISSION
105 WEST CAPITOL
JEFFERSON CITY, MO 65102
1-888-ASK-MODOT (1-888-275-6636)

LEE'S SUMMIT MISSOURI

olsson
N ST., STE. 100
CITY, MO 64116
6.361.1177
RITY NO. 001592

IF A SEAL IS PRESENT ON THIS SHEET IT HAS BEEN ELECTRONICALLY SEALED AN

olsson | BOREHOLE REPORT NO. BB-4 | Sheet 2 of 3

PROJECT NAME: Lee's Summit M291 Interchange Hwy 50
CLIENT: Missouri Department of Transportion
PROJECT NUMBER: 021-04786
LOCATION: Lee's Summit, Missouri

Shelby Tube | Split Spoon | Rock Core

ELEVATION (ft)	MATERIAL DESCRIPTION	GRAPHIC LOG	DEPTH (ft)	SAMPLE TYPE NUMBER	CLASSIFICATION (USCS)	BLOWS/6" N-VALUE	UNC. STR. (tsf)	MOISTURE (%)	DRY DENSITY (pcf)	LL/PI (%)	ADDITIONAL DATA/ REMARKS
			20								
	WEATHERED SHALE										
	Yellowish brown, grayish brown - Chanute Shale Formation (continued)										
1005	**23.0'**										
	Grades to gray - Chanute Shale Formation		25	SS 6		50/5"		12.4			
1000				SS 7		50/5"		20.0			
	30.0'		30								
	SANDSTONE										
	Gray - Chanute Shale Formation			RC 8							Recovery 98.3% RQD 30.0%
995			35								
				RC 9			205.0 162.0				Recovery 96.7% RQD 41.7%
990			40								

CONTINUED NEXT PAGE

WATER LEVEL OBSERVATIONS	
WD	▽ 16.0 ft
IAD	▼ Not Encountered
AD	▼ Not Encountered

OLSSON, INC.
1700 E. 123RD STREET
OLATHE, KANSAS 66061

STARTED:	11/30/22	FINISHED:	11/30/22
DRILL CO.:	OLSSON	DRILL RIG:	CME 550X
DRILLER:	D. LUDWIG	LOGGED BY:	E. CRISP
METHOD:	HOLLOW STEM AUGER / ROCK CORE		

olsson | BOREHOLE REPORT NO. BB-4 | Sheet 3 of 3

PROJECT NAME: Lee's Summit M291 Interchange Hwy 50
CLIENT: Missouri Department of Transportion
PROJECT NUMBER: 021-04786
LOCATION: Lee's Summit, Missouri

Shelby Tube | Split Spoon | Rock Core

ELEVATION (ft)	MATERIAL DESCRIPTION	GRAPHIC LOG	DEPTH (ft)	SAMPLE TYPE NUMBER	CLASSIFICATION (USCS)	BLOWS/6" N-VALUE	UNC. STR. (tsf)	MOISTURE (%)	DRY DENSITY (pcf)	LL/PI (%)	ADDITIONAL DATA/ REMARKS
			40								
	SANDSTONE										
	Gray - Chanute Shale Formation (continued)			RC 10							Recovery 96.0% RQD 17.5%
985			45								
	46.0'										
	LIMESTONE										
	Light bluish-gray - Drum Limestone Formation			RC 11			684.0 944.0				Recovery 100.0% RQD 51.7%
980	**48.5'**										
	SHALE										
	Gray - Cherryvale Shale Formation		50								
				RC 12							Recovery 100.0% RQD 43.3%
975			55								
				RC 13							Recovery 100.0% RQD 13.3%
970	**60.0'**		60								

BASE OF BORING AT 60.0 FEET

WATER LEVEL OBSERVATIONS	
WD	▽ 16.0 ft
IAD	▼ Not Encountered
AD	▼ Not Encountered

OLSSON, INC.
1700 E. 123RD STREET
OLATHE, KANSAS 66061

STARTED:	11/30/22	FINISHED:	11/30/22
DRILL CO.:	OLSSON	DRILL RIG:	CME 550X
DRILLER:	D. LUDWIG	LOGGED BY:	E. CRISP
METHOD:	HOLLOW STEM AUGER / ROCK CORE		

GRANT C. LUCKENBILL NUMBER PE-2012018100 2-28-25
GRANT C. LUCKENBILL–ENGINEER
MO# PE–2012018100

DATE PREPARED: 2/27/2025
ROUTE: 291 | STATE: MO
DISTRICT: BR | SHEET NO.: 44
COUNTY: JACKSON
JOB NO.: J4P3196
FEDERAL PROJECT NO: STB-3001(009)
PROJECT NO.:
BRIDGE NO.: A9328

DESCRIPTION | DATE

MISSOURI HIGHWAYS AND TRANSPORTATION COMMISSION
105 WEST CAPITOL
JEFFERSON CITY, MO 65102
1-888-ASK-MODOT (1-888-275-6636)

LEE'S SUMMIT MISSOURI

olsson
ST., STE. 100
CITY, MO 64116
6.361.1177
RITY NO. 001592

IF A SEAL IS PRESENT ON THIS SHEET IT HAS BEEN ELECTRONICALLY SEALED AND

BOREHOLE REPORT NO. BB-5

Sheet 1 of 2

PROJECT NAME: Lee's Summit M291 Interchange Hwy 50	CLIENT: Missouri Department of Transportion
PROJECT NUMBER: 021-04786	LOCATION: Lee's Summit, Missouri

Shelby Tube / Split Spoon / Rock Core

: X: 0 Y: 0

APPROX. SURFACE ELEV. (ft): 1028

ELEVATION (ft)	MATERIAL DESCRIPTION	DEPTH (ft)	SAMPLE TYPE NUMBER	CLASSIFICATION (USCS)	BLOWS/6" N-VALUE	UNC. STR. (tsf)	MOISTURE (%)	DRY DENSITY (pcf)	LL/PI (%)	ADDITIONAL DATA/ REMARKS
	ASPHALT (0.3') Thickness of 3"	0								
	CONCRETE (1.0') Thickness of 9"		U 1				28.7	96.3		PP = 3.5 tsf
1025	LEAN TO FAT CLAY Stiff, yellowish brown, moist		U 2				27.4	98.6		PP = 4.0 tsf
		5								
	(7.0') Grades to hard, shaley									
1020			U 3				19.8	108.4		PP = 4.5+ tsf
		10								
	(12.0') WEATHERED SHALE Yellowish brown, silty, trace sand - Chanute Shale Formation		SS 4		50/2"		23.6			
1015		15								
	(15.0') SANDSTONE Yellowish brown - Chanute Shale Formation		RC 5							Recovery 85.0% RQD 0.0%
1010		20								
	(20.0')									

CONTINUED NEXT PAGE

WATER LEVEL OBSERVATIONS	
WD	Not Encountered
IAD	Not Encountered
AD	Not Encountered

OLSSON, INC.
1700 E. 123RD STREET
OLATHE, KANSAS 66061

STARTED:	12/1/22	FINISHED:	12/1/22
DRILL CO.:	OLSSON	DRILL RIG:	CME 550X
DRILLER:	D. LUDWIG	LOGGED BY:	E. CRISP
METHOD:	HOLLOW STEM AUGER / ROCK CORE		

BOREHOLE REPORT NO. BB-5

Sheet 2 of 2

PROJECT NAME: Lee's Summit M291 Interchange Hwy 50	CLIENT: Missouri Department of Transportion
PROJECT NUMBER: 021-04786	LOCATION: Lee's Summit, Missouri

Shelby Tube / Split Spoon / Rock Core

ELEVATION (ft)	MATERIAL DESCRIPTION	DEPTH (ft)	SAMPLE TYPE NUMBER	CLASSIFICATION (USCS)	BLOWS/6" N-VALUE	UNC. STR. (tsf)	MOISTURE (%)	DRY DENSITY (pcf)	LL/PI (%)	ADDITIONAL DATA/ REMARKS
	SHALE Yellowish brown - Chanute Shale Formation (21.5')	20								
1005	Grades to gray - Chanute Shale Formation		RC 6							Recovery 100.0% RQD 35.0%
	(25.0')	25								

BASE OF BORING AT 25.0 FEET

WATER LEVEL OBSERVATIONS	
WD	Not Encountered
IAD	Not Encountered
AD	Not Encountered

OLSSON, INC.
1700 E. 123RD STREET
OLATHE, KANSAS 66061

STARTED:	12/1/22	FINISHED:	12/1/22
DRILL CO.:	OLSSON	DRILL RIG:	CME 550X
DRILLER:	D. LUDWIG	LOGGED BY:	E. CRISP
METHOD:	HOLLOW STEM AUGER / ROCK CORE		

GRANT C. LUCKENBILL NUMBER PE-2012018100 2-28-25
GRANT C. LUCKENBILL-ENGINEER MO# PE-2012018100

DATE PREPARED	2/27/2025
ROUTE	291
STATE	MO
DISTRICT	BR
SHEET NO.	45
COUNTY	JACKSON
JOB NO.	J4P3196
FEDERAL PROJECT NO	STB-3001(009)
PROJECT NO.	
BRIDGE NO.	A9328

DESCRIPTION

DATE

MISSOURI HIGHWAYS AND TRANSPORTATION COMMISSION
105 WEST CAPITOL
JEFFERSON CITY, MO 65102
1-888-ASK-MODOT (1-888-275-6636)

LEE'S SUMMIT MISSOURI

son
N ST., STE. 100
CITY, MO 64116
6.361.1177
RITY NO. 001592

IF A SEAL IS PRESENT ON THIS SHEET IT HAS BEEN ELECTRONICALLY SEALED AN

olsson

BOREHOLE REPORT NO. BB-6

Sheet 1 of 2

PROJECT NAME: Lee's Summit M291 Interchange Hwy 50
CLIENT: Missouri Department of Transportion
PROJECT NUMBER: 021-04786
LOCATION: Lee's Summit, Missouri

Shelby Tube | Split Spoon | Rock Core

MATERIAL DESCRIPTION

: X: 30 Y: 0

APPROX. SURFACE ELEV. (ft): 1028

ELEVATION (ft)	MATERIAL DESCRIPTION	GRAPHIC LOG	DEPTH (ft)	SAMPLE TYPE NUMBER	CLASSIFICATION (USCS)	BLOWS/6" N-VALUE	UNC. STR. (tsf)	MOISTURE (%)	DRY DENSITY (pcf)	LL/PI (%)	ADDITIONAL DATA/ REMARKS
	0.3' **ASPHALT**		0								
	1.0' Thickness of 4" **CONCRETE** Thickness of 8"										
1025	**LEAN TO FAT CLAY** Very stiff, yellowish brown, dry, trace sand			U 1				17.1	106.7		PP = 4.5+ tsf
			5	U 2				16.1	113.5		PP = 4.5+ tsf
1020	8.5' **SANDY CLAY** Hard, yellowish brown, dry		10	U 3				16.1	111.5		PP = 4.5+ tsf
	11.0' **SHALE** Yellowish brown and grayish brown - Chanute Shale Formation										
1015			15	SS 4		17-32-50/4"		14.3			
1010	▽										
			20	SS 5		50/4"		12.4			

CONTINUED NEXT PAGE

WATER LEVEL OBSERVATIONS	
WD	▽ 17.0 ft
IAD	▼ Not Encountered
AD	▼ Not Encountered

OLSSON, INC.
1700 E. 123RD STREET
OLATHE, KANSAS 66061

STARTED:	12/1/22	FINISHED:	12/1/22
DRILL CO.:	OLSSON	DRILL RIG:	CME 550X
DRILLER:	D. LUDWIG	LOGGED BY:	E. CRISP
METHOD:	HOLLOW STEM AUGER / ROCK CORE		

olsson

BOREHOLE REPORT NO. BB-6

Sheet 2 of 2

PROJECT NAME: Lee's Summit M291 Interchange Hwy 50
CLIENT: Missouri Department of Transportion
PROJECT NUMBER: 021-04786
LOCATION: Lee's Summit, Missouri

Shelby Tube | Split Spoon | Rock Core

MATERIAL DESCRIPTION

ELEVATION (ft)	MATERIAL DESCRIPTION	GRAPHIC LOG	DEPTH (ft)	SAMPLE TYPE NUMBER	CLASSIFICATION (USCS)	BLOWS/6" N-VALUE	UNC. STR. (tsf)	MOISTURE (%)	DRY DENSITY (pcf)	LL/PI (%)	ADDITIONAL DATA/ REMARKS
	SHALE Yellowish brown and grayish brown - Chanute Shale Formation (continued)		20								
1005	23.0'										
	Grades to gray - Chanute Shale Formation			SS 6		50/3"		10.3			
1000			25								
				SS 7		50/1"		10.7			
			30								
995				RC 8							Recovery 98.3% RQD 73.3%
	33.8' **SANDSTONE** Gray - Chanute Shale Formation		35								
990				RC 9			244.0 262.0				Recovery 98.3% RQD 56.7%
	40.0'		40								

BASE OF BORING AT 40.0 FEET

WATER LEVEL OBSERVATIONS	
WD	▽ 17.0 ft
IAD	▼ Not Encountered
AD	▼ Not Encountered

OLSSON, INC.
1700 E. 123RD STREET
OLATHE, KANSAS 66061

STARTED:	12/1/22	FINISHED:	12/1/22
DRILL CO.:	OLSSON	DRILL RIG:	CME 550X
DRILLER:	D. LUDWIG	LOGGED BY:	E. CRISP
METHOD:	HOLLOW STEM AUGER / ROCK CORE		

GRANT C. LUCKENBILL NUMBER PE-2012018100 2-28-25
GRANT C. LUCKENBILL-ENGINEER MO# PE-2012018100

DATE PREPARED: 2/27/2025
ROUTE: 291 | STATE: MO
DISTRICT: BR | SHEET NO.: 46
COUNTY: JACKSON
JOB NO.: J4P3196
FEDERAL PROJECT NO: STB-3001(009)
PROJECT NO.:
BRIDGE NO.: A9328

DESCRIPTION | DATE

MISSOURI HIGHWAYS AND TRANSPORTATION COMMISSION
105 WEST CAPITOL
JEFFERSON CITY, MO 65102
1-888-ASK-MODOT (1-888-275-6636)

LEE'S SUMMIT MISSOURI

IF A SEAL IS PRESENT ON THIS SHEET IT HAS BEEN ELECTRONICALLY SEALED AND

olsson
ST., STE. 100
CITY, MO 64116
816.361.1177
RITY NO. 001592