STATE	PROJECT NO.	YEAR	SHEET NO.	TOTAL SHEETS
KANSAS	2 C-5327-01	2026	1	40

STATE OF KANSAS

DEPARTMENT OF TRANSPORTATION
PLAN AND PROFILE OF PROPOSED

ANDERSON COUNTY
2 C-5327-01
KLBIP PROJECT

GRADING
BRIDGE
SEEDING
LTS

INDEX OF SHEETS

1. TITLE SHEET
2. TYPICAL GRADING SECTION
3. PLAN AND PROFILE SHEET
4. DITCH LINING
5-12. BRIDGE DETAILS
13. BRIDGE EXCAVATION
14. STANDARD PILING DETAILS
15. SUPPORTS AND SPACERS FOR REINFORCING STEEL
16. SUMMARY OF QUANTITIES
17. PROJECT SURFACING
18-26. TEMPORARY EROSION AND POLLUTION CONTROL
27. SEEDING
28-33. TRAFFIC CONTROL
34-37. MAINLINE CROSS SECTIONS
38-40. CHANNEL CROSS SECTIONS

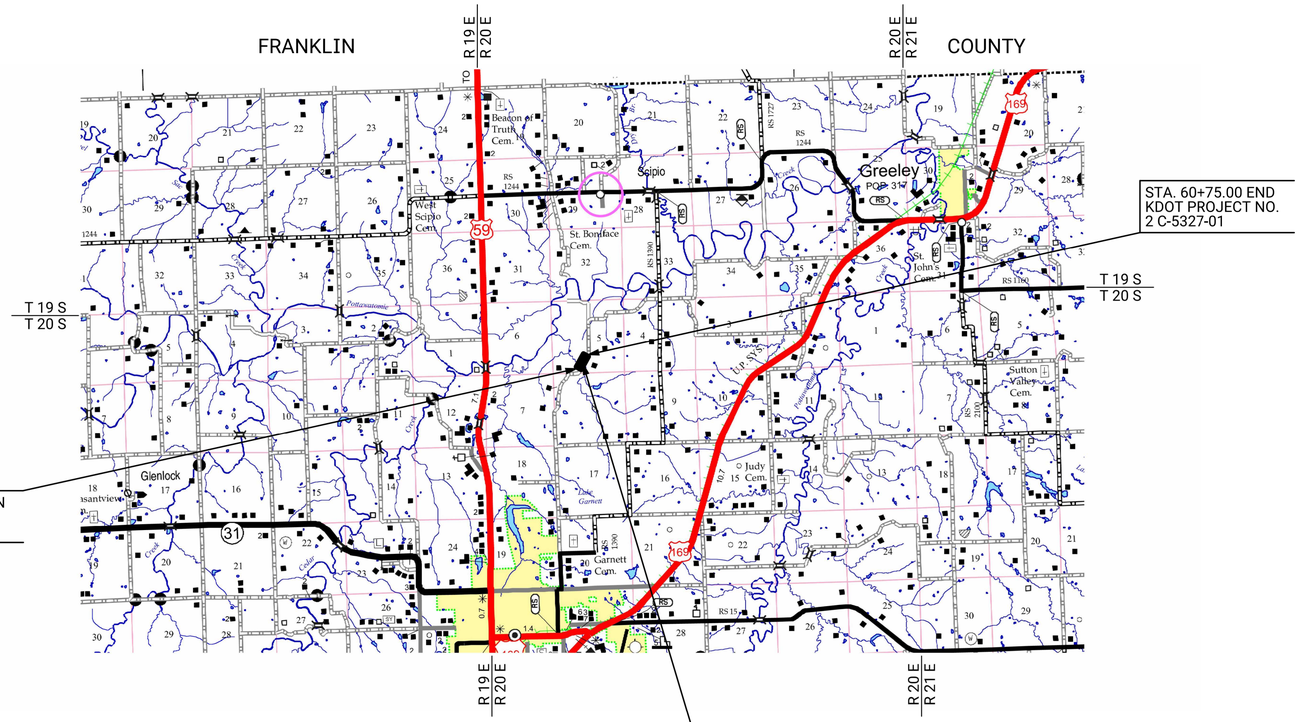

Scale : 1" = 1 MILE

* DESIGN DESIGNATION

AADT	65	2024
V	40	M.P.H.

*MEETS DESIGN CRITERIA OF THE VERY LOW-VOLUME LOCAL ROADS GUIDELINES.

NOTE: ROAD CLOSED DURING CONSTRUCTION. LOCAL TRAFFIC ONLY.

CONVENTIONAL SIGNS

COUNTY LINE		CENTER LINE OF PROJECT	50 1
CITY LIMITS		TERRACE	
STATE OR NATIONAL LINE		CULVERTS	
TOWNSHIP, SECTION or GRANT LINE		DROP INLET & STORM SEWER	
PROPERTY LINE		ACCESS CONTROL	
HIGHWAY FENCE		POWER POLE	
EXISTING FENCE		TELEPHONE POLE	
GUARDRAIL		MARSH	
CONSTRUCTION LIMITS		HEDGE	
RIGHT OF WAY LINE		TREES	
TRAVELED WAY		PROFILE ELEVATION	1172.18
RAILROADS		STREAM or CREEK	

GROSS LENGTH OF PROJECT	150.00	FT. (Includes Equations)		
EXCEPTIONS				
NET LENGTH OF PROJECT	150.00	FT.	0.028	MILES
NET LENGTH OF BRIDGES	50.23	FT.	0.010	MILES
NET LENGTH OF ROAD	99.77	FT.	0.018	MILES

SETH A. ALLEN
LICENSED
30728
5-11-26
KANSAS
PROFESSIONAL ENGINEER

Schwab Eaton
Manhattan, KS 66502
Salina, KS 67401
Wichita, KS 67212
Beloit, KS 67420

RECOM. FOR APPROVAL-DATE
5-12-26
ANDERSON COUNTY PUBLIC WORKS

DATE | BY
SURVEY
CADD TECHNICIAN
DESIGNERS
SQUAD

Drawn By: whitson Plotted: 15-JAN-2026 13:56
File: 01_c532701rti-01.dgn

STATE	PROJECT NO.	YEAR	SHEET NO.	TOTAL SHEETS
KANSAS	2 C-5327-01	2026	2	39

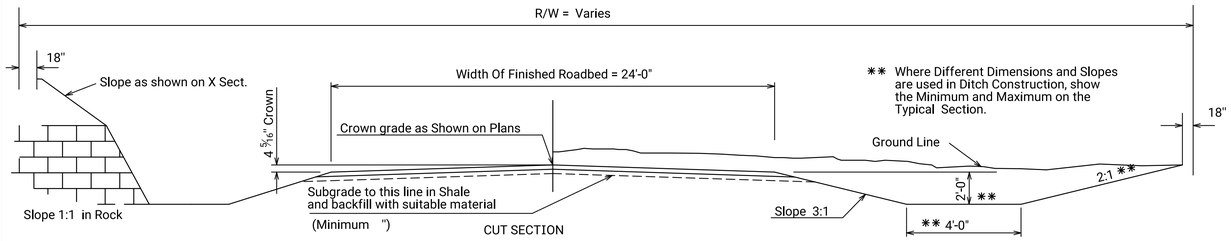

NOTE: For overbreakage in limestone, sandstone or shale see Special Provisions

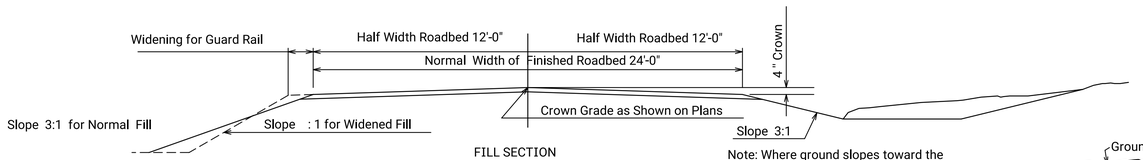

Shoulder Slopes at ends of Guard Rail should be no steeper than 3:1.
When fill exceeds 6' Shoulder Slopes may be steepened

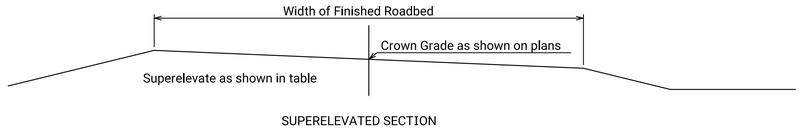

SUPERELEVATED SECTION

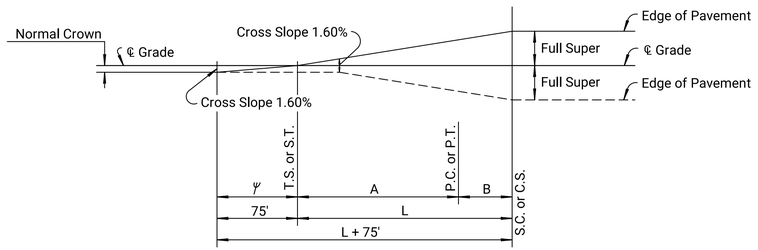

PROFILE SHOWING METHOD OF ATTAINING SUPERELEVATION

Sta. P.I. Curve	Radius	Design Speed	Super %	Transition - (Lin.Ft.)		
				L	A	B

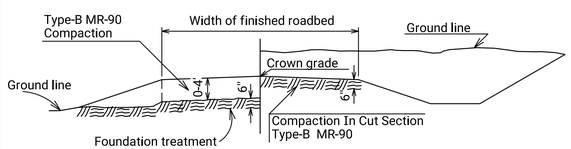

ALL EMBANKMENT SHALL BE COMPACTED EXCEPT DITCHPLUGS AND WASTE BERMS.

FOUNDATION TREATMENT AND COMPACTION OF EARTHWORK

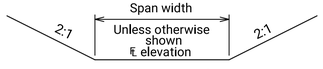

TYPICAL INLET AND OUTLET CHANNEL EXCAVATION SECTION FOR BOX STRUCTURES & PIPE CULVERTS

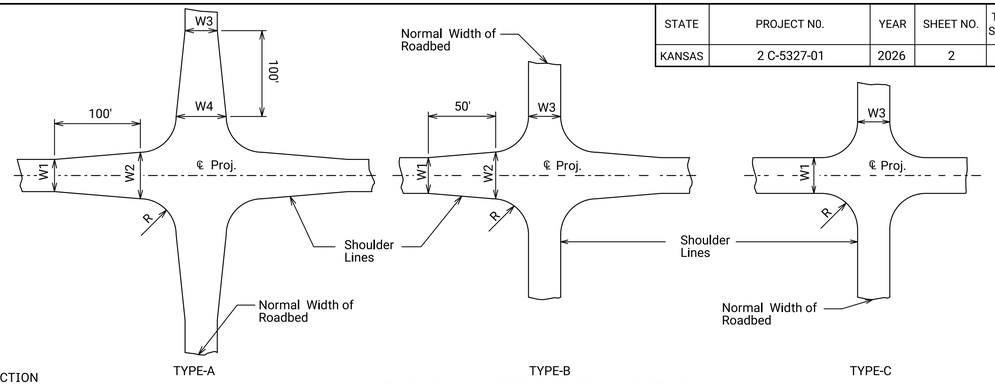

TYPICAL INTERSECTION DETAILS

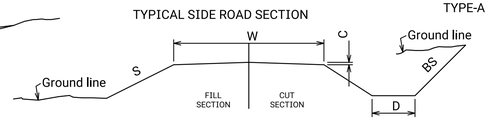

SUMMARY OF INTERSECTIONS AND SIDEROADS												
STATION	SIDE OR QUADRANT	TYPE	W	W1	W2	W3	W4	R	C	S	D	BS

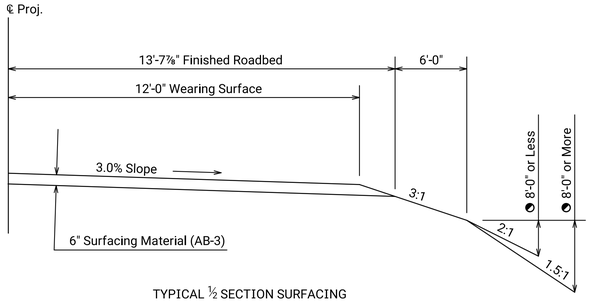

TYPICAL ½ SECTION SURFACING

◔ Dimensions and slopes for standard ditches and fills. See plan and cross sections for variations.

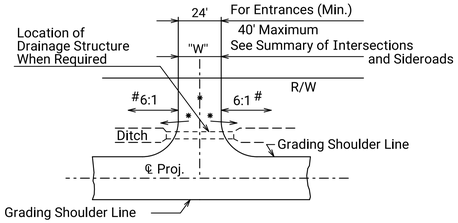

TYPICAL SIDE ROAD OR ENTRANCE DETAIL

✳ On side roads and entrances which slope toward the roadway, construct a low point approx. 6" deep to divert surface drainage into the roadway ditch.

On ditch plugs and side roads or entrances without drainage structures use 8:1 slopes where feasible.

OBJECT MARKER

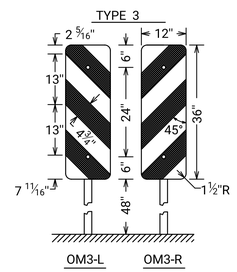

SUMMARY OF OBJECT MARKERS AND SIGNS						
STATION TO STATION	SIDE	TYPE OF STRUCT.	TYPE OF SIGN	OBJECT MARKER TYPE	OBJECT MARKER NO.	REMARKS
59+76	Rt.	Bridge		OM-3R	1	
59+83	Lt.	Bridge		OM-3L	1	
60+29	Rt.	Bridge		OM-3L	1	
60+36	Lt.	Bridge		OM-3R	1	
Ø As you face bridge end from approach						
✳Back-to-Back [Sign(s) on Both Sides of Post]						

GENERAL NOTES

All signs shown on the plans, and other signs furnished and installed by the LPA with their own forces and funds will be installed in conformance with the Manual on Uniform Traffic Control Devices (latest edition).

LPA to furnish all easements and additional right of way (unless otherwise noted).

Public and private utility facilities will be adjusted by others as needed to fit the new construction unless noted otherwise on the plans or in the proposal.

Refer to KDOT Standard Drawing No. BR 100 for excavation limits for constructing box culverts.

All Sign, Fastener, and Post materials must meet the requirements of the latest edition of the KDOT Standard Specifications for State Road and Bridge Construction.

Install Object Markers Type OM3-(R)(L) at each corner of all span bridges and when indicated on the plans at box structures. Install with the inside edge of the marker in line with the inside clearance line of the structure.

NO.	REVISIONS	BY	APP'D
7	01-08-15 Revised superelevation diagram, updated misc. notes.	TLS	RJS
6	11-9-04 Changed "Culvert" to "Structure"	DMK	RJS
5	12-1-03 Rem. Delin.'s/Add Typ. Sect./Changed OM notes	DMK	RJS
4	5-14-03 Rev. Contractor note in Gen. Notes	DMK	RJS

KANSAS DEPARTMENT OF TRANSPORTATION

TYPICAL GRADING SECTION

LP907

FHWA APPROVAL			APP'D.	RJS
DESIGNED	DETAILED	TLS	QUANTITIES	TRACED
DESIGN CK.	DETAIL CK.	RJS	QUAN.CK.	TRACE CK.

CADconform Certify This File

Plotted by: Twhitson 23-FEB-2026 10:03
File02_c532701rss907.dgn

STATE	PROJECT NO.	YEAR	SHEET NO.	TOTAL SHEETS
KANSAS	2 C-5327-01	2026	3	39

UTILITIES
Communication - Brightspeed
(785) 969-4333

Power - 4 Rivers Electric COOP Inc.
(800) 778-9140

Water - Anderson County RWD 1
(913) 795-2278

℄ P.O.T. Sta. 56+91.22 =
℄ Sta. 57+24.56, 621.31' Lt
N. 576624.07, E. 20459511.25
1. Set 1/2" Bar w/ Red SE Cap — 3.5' N.W.
2. Crop Line — 2.5' S.E.
3. Edge of Gravel Road — 300.0' N.E.
4. North End Bridge Structure

℄ P.O.T. Sta. 63+22.95 =
℄ Sta. 62+66.70, 297.51' Lt.
N. 577159.28, E. 20459846.86
1. Set 1/2" Bar w/ Red SE Cap — 19.1' N.W.
2. Crop Line — 0.9' N.W.
3. Edge of Gravel Road — 300.0' S.W.
4. North End Bridge Structure

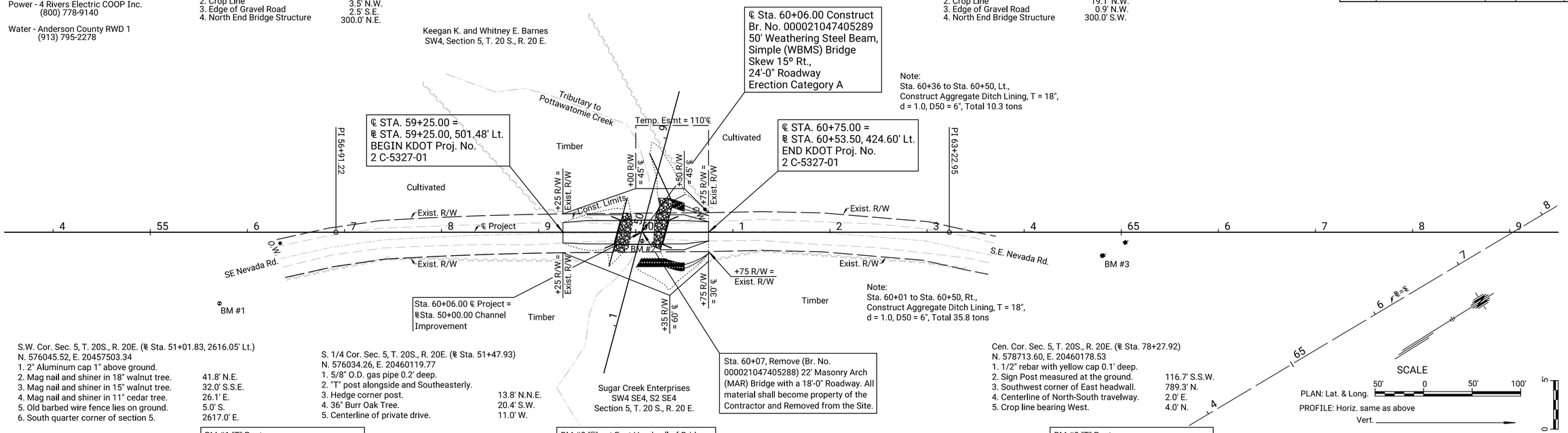

S.W. Cor. Sec. 5, T. 20S., R. 20E. (℄ Sta. 51+01.83, 2616.05' Lt.)
N. 576045.52, E. 20457503.34
1. 2" Aluminum cap 1" above ground.
2. Mag nail and shiner in 18" walnut tree. — 41.8' N.E.
3. Mag nail and shiner in 15" walnut tree. — 32.0' S.S.E.
4. Mag nail and shiner in 11" cedar tree. — 26.1' E.
5. Old barbed wire fence lies on ground. — 5.0' S.
6. South quarter corner of section 5. — 2617.0' E.

S. 1/4 Cor. Sec. 5, T. 20S., R. 20E. (℄ Sta. 51+47.93)
N. 576034.26, E. 20460119.77
1. 5/8" O.D. gas pipe 0.2' deep.
2. "T" post alongside and Southeasterly. — 13.8' N.N.E.
3. Hedge corner post. — 20.4' S.W.
4. 36" Burr Oak Tree. — 11.0' W.
5. Centerline of private drive.

Cen. Cor. Sec. 5, T. 20S., R. 20E. (℄ Sta. 78+27.92)
N. 578713.60, E. 20460178.53
1. 1/2" rebar with yellow cap 0.1' deep.
2. Sign Post measured at the ground. — 116.7' S.S.W.
3. Southwest corner of East headwall. — 789.3' N.
4. Centerline of North-South travelway. — 2.0' E.
5. Crop line bearing West. — 4.0' N.

BM #1 "T" Post
73.23' Rt., ℄ Sta. 55+71.35, Elev. = 895.38

BM #2 "□" cut East Headwall of Bridge
9.03' Rt., ℄ Sta. 60+06.66, Elev. = 897.50

BM #3 "T" Post
24.12' Rt., ℄ Sta. 64+80.28, Elev. = 907.60

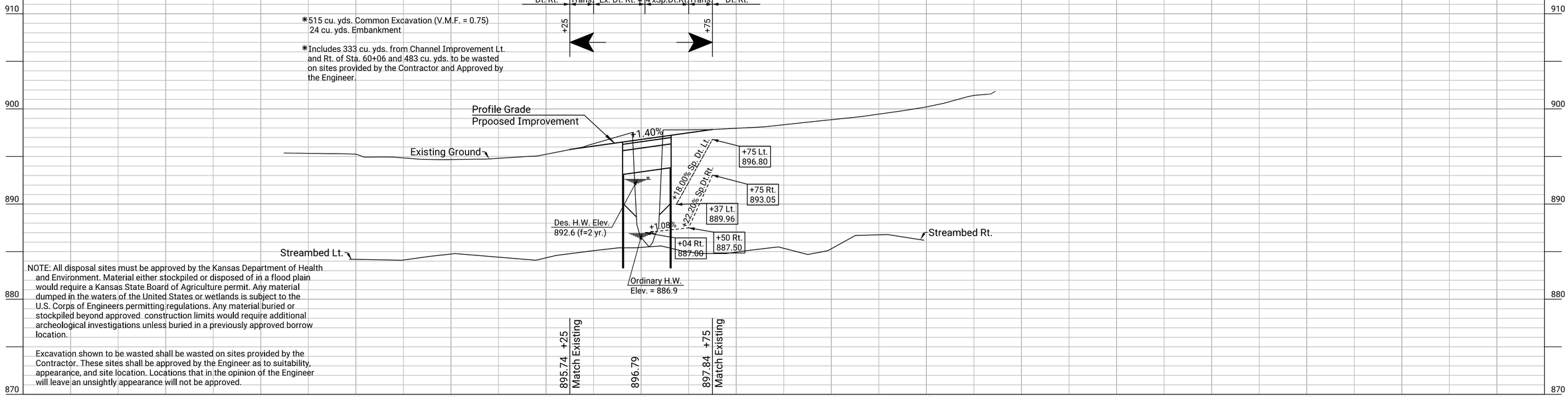

NOTE: All disposal sites must be approved by the Kansas Department of Health and Environment. Material either stockpiled or disposed of in a flood plain would require a Kansas State Board of Agriculture permit. Any material dumped in the waters of the United States or wetlands is subject to the U.S. Corps of Engineers permitting regulations. Any material buried or stockpiled beyond approved construction limits would require additional archeological investigations unless buried in a previously approved borrow location.

Excavation shown to be wasted shall be wasted on sites provided by the Contractor. These sites shall be approved by the Engineer as to suitability, appearance, and site location. Locations that in the opinion of the Engineer will leave an unsightly appearance will not be approved.

DATE | BY | REFERENCES NOTED | REFERENCES CHECKED

Plotted by : Twhitson 24-FEB-2026 12:01
File : 003_c532701rpp-01.dgn

KANSAS DEPARTMENT OF TRANSPORTATION

PLAN AND PROFILE

STA. 59+25.00 TO STA. 60+75.00

Sh. No. 3

STATE	PROJECT NO.	YEAR	SHEET NO.	TOTAL SHEETS
KANSAS	2 C-5327-01	2026	4	39

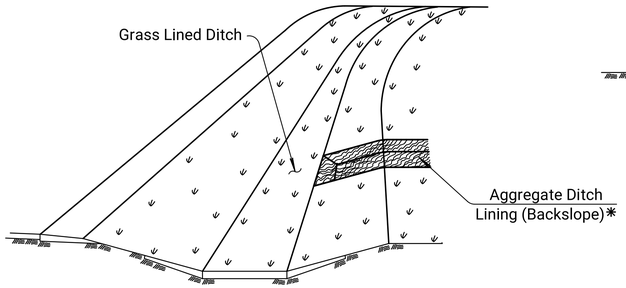

PERSPECTIVE VIEW
(Backslope Dt. Lining without Highway Dt. Lining)

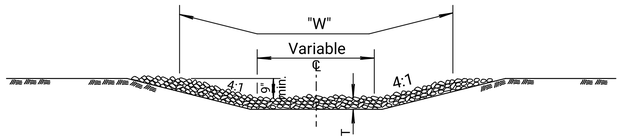

CROSS SECTION (Backslope)

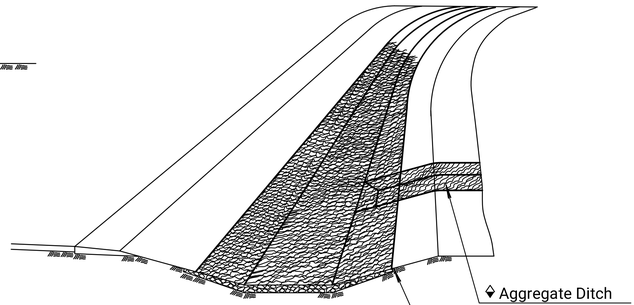

PERSPECTIVE VIEW

GENERAL NOTE

All work and materials required for this construction shall be paid for by the ton of "Aggregate Ditch Lining (D_{50})".

Dumped aggregate shall be spread in reasonable conformity with the ditch section as shown and as directed by the Engineer.

Aggregate Ditch Lining shall be measured and paid for by the ton in the vehicle at the location designated by the Engineer and shall be full compensation for excavation for undercutting, furnishing, hauling, placing and maintaining the material as specified to complete the work.

The weight of the aggregate is based on a standard density of 120 PCF. When the standard density of the material is more or less than 120 PCF, the thickness may vary correspondingly.

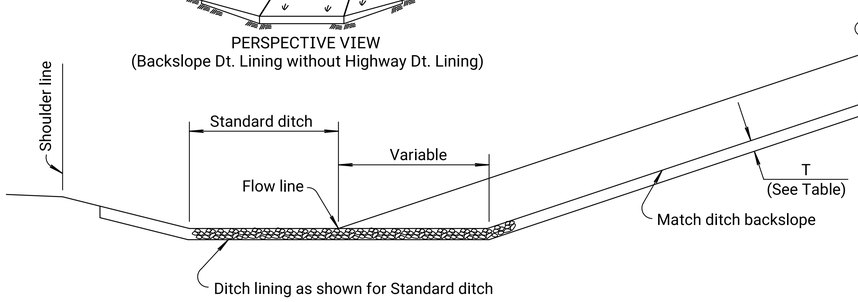

LONGITUDINAL SECTION (Backslope)

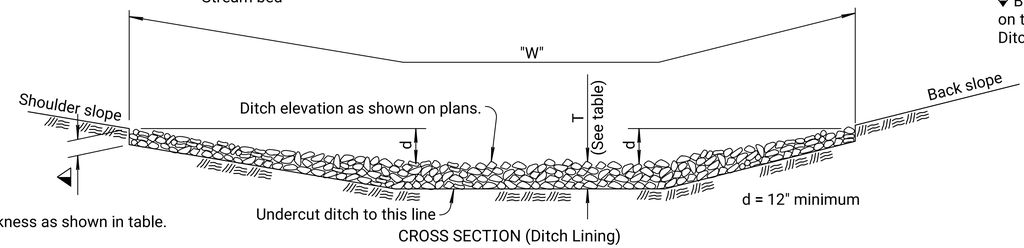

CROSS SECTION (Ditch Lining)

Feather edges to nominal thickness as shown in table.

◆ Backslope aggregate ditch lining, constructed as indicated on this sheet, shall be paid for by the ton of "Aggregate Ditch Lining (D_{50})."

			QUANTITIES FOR TYPICAL 10' DITCH with 6:1 shoulder slope & 4:1 backslope			
D_{50}	T	◭	Approx. Excavation per Station (cu.yd.)			
			d = 1.0	d = 2.0	d = 3.0	d = 4.0
◔ 4"	12"	8"	68	99	130	161
6"	18"	12"	102	148	195	241

Note: Quantities provided for information only.
◔ Aggregate larger than 4 inches (D_{50}) should not be used within the clear zone.

AGGREGATE DITCH LINING (D_{50})

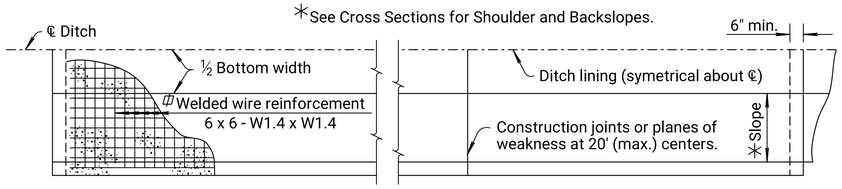

HALF PLAN
(Backslope Ditch Lining similar)

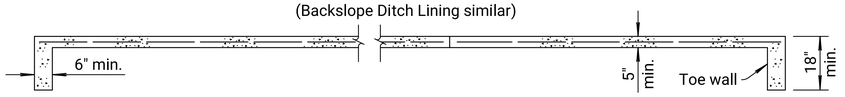

LONGITUDINAL SECTION

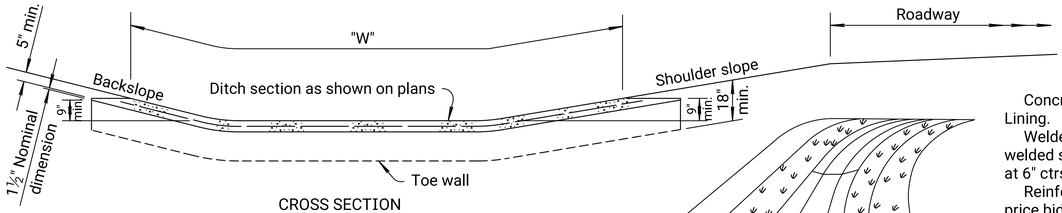

CROSS SECTION

GENERAL NOTE

Concrete Grade 3.0 shall be used in Concrete Ditch Lining.

Welded wire reinforcement shall be of the electrically welded square mesh type with No. W1.4 wires spaced at 6" ctrs. each way.

Reinforcement as shown is included in the unit price bid for "Concrete Ditch Lining".

Measurements of Concrete Ditch Lining shall be in sq. yds. of outside surface area. Add 1'-6" times "W" for each toewall.

The exact location and dimensions may be adjusted, if required, by the Engineer at the time of construction.

Longitudinal construction joints may be constructed at the Contractor's option.

▱ Welded wire can be substituted with macro fiber reinforcement. See Standard Specifications for macro fiber and application rate requirements

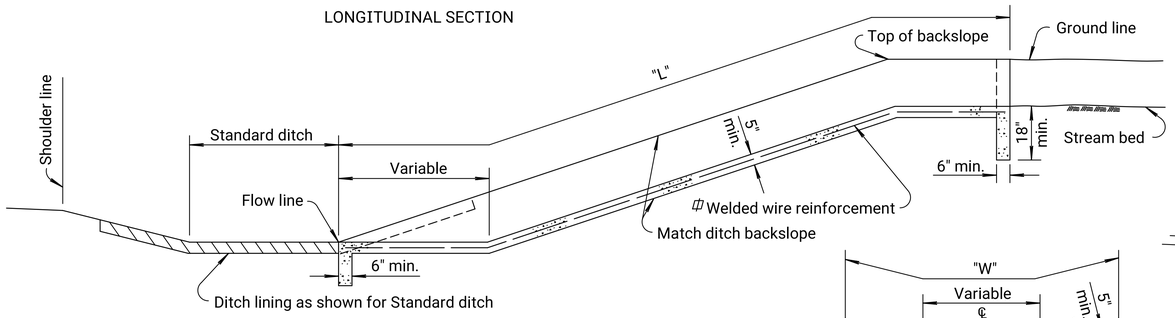

LONGITUDINAL SECTION (Backslope)

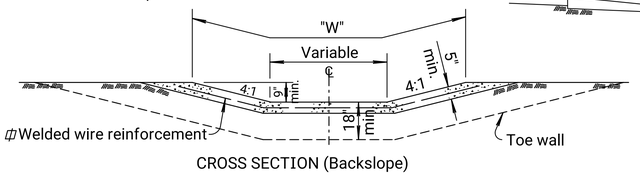

CROSS SECTION (Backslope)

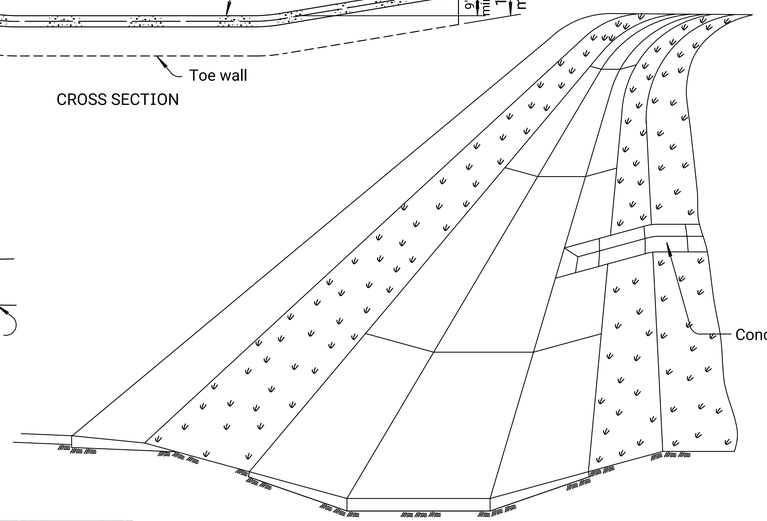

PERSPECTIVE VIEW

CONCRETE DITCH LINING

NO.	DATE	REVISIONS	BY	APP'D
10	03-27-18	Added Aggregate Size in Clear Zone Guidance	A.L.R.	T.T.R.
09	08-01-12	Revised General Note	S.W.K.	J.O.B.
08	03-20-08	Rev. agg. edge thickness and quant.	S.W.K.	J.O.B.

KANSAS DEPARTMENT OF TRANSPORTATION

DITCH LINING

RD502

FHWA APPROVAL	06-19-18	APP'D.	Scott W. King
DESIGNED	DETAILED	QUANTITIES	TRACED
DESIGN CK.	DETAIL CK.	QUAN.CK.	TRACE CK.

KDOT Graphics Certified 04-18-2022 Sh. No. 4

KDOT Graphics Certified

Plotted by : Twhitson 23-FEB-2026 10:03
File : 004_c532701rss502.dgn

STATE	PROJECT NO.	YEAR	SHEET NO.	TOTAL SHEETS
KANSAS	2 C-5327-01	2026	5	39

SUMMARY OF QUANTITIES

Item / Location	Class I Excavation Cu. Yds.	Concrete Grade (4.0) (AE) (SW) Cu. Yds.	Reinforcing Steel (Grade 60) Lbs.	Structural Steel			Piles (Steel) (HP10x42) Lin. Ft.	Test Piles (Special) (HP10x42) Lin. Ft.	Contractor Furnished PDA Each	Bridge Handrail (Metal) (Double Nested) Lin. Ft.	Piles (Corrugated Metal Sheet) Sq. Ft.	Slope Protection (Riprap Stone) (200 Lb.) Cu. Yds.
				AASHTO M270 Gr. 50WT3 Lbs.	ASTM A709 Grade 50W Lbs.	ASTM A709 Grade 36 Lbs.						
Abutment No. 1	42				2,280		168	31	1		723	37
Abutment No. 2	42				2,280		176	32	1		723	48
Substructure	84				4,560		344	63	2		1,446	85
Superstructure		30.9	8,160	37,800	4,940	2,790				98		
Total	84	30.9	8,160	37,800	9,500	2,790	ǂ 344	ǂ 63	2	98	1,446	85

NOTE: Use ONLY Steel Pile HP10x42 on this project.

ǂ Summary of Piling
Abutment No. 1: 8 @ 21'
Abutment No. 1 (Test Pile): 1 @ 31'
Abutment No. 2: 8 @ 22'
Abutment No. 2 (Test Pile): 1 @ 32'

INDEX OF BRIDGE DETAILS

5. General Notes
6. Contour Map
7. Construction Layout
8. Abutment and Wings
9. Superstructure Details (Steel Framing)
10. Superstructure Details (Slab)
11. Diaphragm Details
12. Bridge Rail Details

GENERAL NOTES

TEMPERATURE: The design temperature for all dimensions is 60°F.

CONCRETE: Concrete Grade 4.0 (AE)(SW) shall be used throughout. Bevel all exposed edges with a ¾" triangular moulding unless otherwise noted.

SLAB CURING PERIOD: No traffic shall be permitted on the deck surface until the wet curing period is complete.

CONSTRUCTION LOADS: Limited traffic is permitted on the new deck kduring the curing period. Keep any exposed deck wet during the curing period. See KDOT Specifications Section 710 Tables 710-1 & 710-2 for additional information. Construction loads on the 8" deck will be limited to loads approved by the Engineer.

REINFORCING: All dimensions in Bending Diagrams are out to out of the bar. All other dimensions relative to reinforcing steel are to ℄ of bar unless otherwise noted. All reinforcing steel shall be Grade 60.

STRUCTURAL STEEL: Beams shall meet the requirements for AASHTO M270 Grade 50TW3 Stiffeners and diaphragms shall mee the requirements for ASTM A709 Grade 50W. The edge and end form angle shall meet the requirements for ASTM A709 Grade 50W or Grade 50 but may be ASTM A709 Grade 36. If ASTM Grade 36 or 50 steel is used, it shall receive a 3 mil coat of organic zinc primer.

PAINTING TOP FLANGES: Apply a 3 mil primer coat of an approved inorganic zinc primer to the tops of the top flanges after all welding is complete.

BOLTS: All bolts, nuts and hardened flat washers shall conform to the heavy hex structural requirements of ASTM A325, Type 3, and KDOT Specifications unless otherwise noted. Direct Tension Indicators (DTIs) are to comply with the requirements of the latest edition of ASTM F959. This work is subsidiary to the bid item, "Structural Steel".

BOLTED CONNECTIONS: Girder Connections: Use ¾" diameter heavy hex structural bolts for the member connections. Use 13/16" diameter bolt holes. Do not ream during field erection. Accurately align all connections by driving 13/16" diameter drift pins in all corners. See KDOT Specifications.

In lieu of using DTI's, the Contractor may at his option use the turn of the nut method for tightening bolts.

WELDING: Material and construction shall conform to KDOT Specifications. Welding requires approved procedures and welders.

OPTIONAL CONNECTIONS: Connect beam diaphragm connections with high strength bolted connections or welded connections at the option of the contractor. Include details of the proposed connections in the shop drawings. If welded connections are used, all welds shall be ¼" fillet welds. The structural steel quantities shown on the plans are based on the bolted connections. The structural steel pay quantity will be the quantity shown on the plans regardless of the type of connection used or of any approved modifications to the connection details.

EMBANKMENT: Complete the embankment at the abutments as shown on the Bridge Excavation sheet prior to driving the abutment piling.

PILING: Drive all piling to a minimum pile tip of Elev. 871.2 at Abutment 1 and 870.9 at Abutment 2. Driving shall stop when in the opinion of the Engineer additional driving may damage the piling. Piling in the Wingwalls are not load bearing and shall not be driven to bearing, but shall instead be driven to the depth stated in the plans. Drive all load bearing piling to the Pile Driving Formula Load of:

Abutment No. 1 47 tons
Abutment No. 2 47 tons

As a minimum drive each pile to the load and penetration, but in no case shall the pile be driven to more than 110% of Pile Driving Formula Driving Load. At any location where problems are experienced, pile damage is suspected, or the Pile Driving Formula Load occurs significantly above the design pile tip elevation, the Engineer may request that the Pile Driving Analyzer (PDA) equipment be used.

TEST PILE SPECIAL: Drive test piling at the locations shown on the plans or as directed by the Engineer/Geologist. Use the Pile Driving Analyzer (PDA) equipment and methods compliant with KDOT Specifications. The test piling shall remain in place as permanent piling. Drive the test pile special piling the resistance value of the Strength 1 load divided by Phi shown on the plans for the respective substructure element.

CONTRACTOR FURNISHED PDA: Use the Pile Driving Analyzer equipment at the locations shown on the Construction Layout sheet. Use Pile Driving ANALYZER equipment and methods compliant with KDOT Special Provisions. The piling shall remain in place as permanent piling. Drive the Piling to the resistance value of (Strength 1 divided by Phi shown on the plans).

PILING SPLICE LOCATION: Integral pile splice locations and weld testing criteria for. Abutments 1 and 2 will follow the "Standard Pile Details" Sheet (BR110).

QUANTITIES: Items not listed separately in the Summary of Quantities are subsidiary to other items in the proposal.

BRIDGE EXCAVATION: Elevation 888.4 shall designate the Excavation Boundary Plane Class I and Class II; Class I above the plane, Class II below the plane. See the Bridge Excavation sheet for the limits of pay excavation.

PILES (CORRUGATED METAL SHEET): Structural steel for sheet piling shall meet ASTM A 328 (Gr. 36 min.) and shall be a "hot rolled" shape. Cold bent shapes will not be accepted. Corner connections are subsidiary to the bid item "Piles (corrugated metal sheet)". Welded or mechanical piling splices are only allowed with the Engineer's approval. Submit a sheet pile plan and calculations to the Engineer for approval. Include plan details of materials, size and location of the sheet piling. Submit the plan at the pre-construction conference. Variation in the sheet pile alignment may be allowed with the approval of the Engineer. Use only "tamping" compaction equipment within five feet of the sheet piling. [Painting of steel sheet piling is not required.] See KDOT Specifications.

DRIP LINE PROTECTION: Place a 10 foot wide mat of geotextile under the rock/rubble embankment on the berm and berm slopes and centered on the drip lines of the slab.

BRIDGE DECK GROOVING: After the bridge deck has cured, transversely groove the deck in accordance with KDOT Specifications. For phased construction groove each completed phase before opening to traffic. Align the grooves from each adjacent phase across the bridge deck without jogs or discontinuities. For skewed bridges all grooving will be perpendicular to the centerline of the bridge.

REMOVAL OF EXISTING STRUCTURE: Removal of existing structure is included in the bid item, "Removal of Existing Structures", Lump Sum. All materials removed from the existing structure shall become the property of the Contractor. Remove this material from the site.

DIMENSIONS: All dimensions shown on the design plans are horizontal dimensions unless otherwise noted. Make necessary allowances for roadway grade and cross slope.

CONTRACTOR CONSTRUCTION STAKING: Contractor Construction Staking for clear span bridges requires two independent surveys. See KDOT Specifications.

BRIDGE HANDRAIL (METAL): Steel guardrail bridge rail as shown is only intended for use on low volume local roads and does not meet the AASHTO Specifications and KDOT requirements for a 10 kip load.

SLOPE PROTECTION (Riprap Stone): Place Slope Protection (Riprap Stone) to the limits and thicknesses shown on the plans or as directed by the Engineer. Use (200 lb) as described in Division 1100 placed to the limits shown on the plans

DESIGN DATA

DESIGN LOADING: HL-93 A.A.S.H.T.O. Specification, 2020 Edition and latest interim Specifications, Load and Resistance Factor Design.

LOADING:
Live Load - HL-93

UNIT STRESSES:

Concrete Grade 4.0 (AE) (SW)	f'c = 4.0 ksi
Reinforcing Steel (Grade 60)	fy = 60,000 psi
Structural Steel ASTM A709M Gr. 36	fy = 36 ksi
Structural Steel ASTM A709M Gr. 50W	fy = 50 ksi
Structural Steel ASTM A709M Gr. 50WT3	fy = 50 ksi

ABUTMENT TOTAL LOAD:
The total reactions from the combined superstructure dead and live loading are as follows:
Strength 1 = 466 kips or 233 tons per abutment
Service 1 = 308 kips or 154 tons per abutment

LRFD DESIGN PILE LOAD:

Design Loading (Tons/Pile)	Strength 1	Service 1	Phi
Abutments:	47	31	0.65

LRFR RATING FACTORS

Truck \ Rating Level	Inventory	Operating
HL-93 Loading	1.34	1.74
NRL		1.87
2018 Manual for Bridge Evaluation		

NUT ROTATION FROM THE SNUG FIT CONDITION

◔ Bolt Length	Rotation
Up to and including 4 bolt diameters	⅓
Over 4 bolt diameters to 8 bolt diameters	½
Over 8 bolt diameters to 12 bolt diameters	⅔

◔ Length from the underside of the bolt head to end of the bolt.

NO.	DATE	REVISIONS	BY	APP'D
4				
3				
2				
1				

~~KANSAS DEPARTMENT OF TRANSPORTATION~~
Br. No. P.8-21.2 Sta. 60+06.00
SUMMARY OF QUANTITIES AND GENERAL NOTES
Proj. No. 2 C-5327-01 Anderson County

SHEET NO. OF		SCALE 1/4" = 1'-0"		APP'D			
DESIGNED	SAA	DETAILED	SAA	QUANTITIES	SAA	CADD	SAA
DESIGN CK.	DB	DETAIL CK.	DB	QUAN. CK.	DB	CADD CK.	DB

STATE	PROJECT NO.	YEAR	SHEET NO.	TOTAL SHEETS
KANSAS	2 C-5327-01	2026	6	39

℄ P.O.T. Sta. 56+91.22 =
℄ Sta. 57+24.56, 621.31' Lt
N. 576624.07, E. 20459511.25
1. Set 1/2" Bar w/ Red SE Cap
2. Crop Line 3.5' N.W.
3. Edge of Gravel Road 2.5' S.E.
4. North End Bridge Structure 300.0' N.E.

℄ P.O.T. Sta. 63+22.95 =
℄ Sta. 62+66.70, 297.51' Lt.
N. 577159.28, E. 20459846.86
1. Set 1/2" Bar w/ Red SE Cap
2. Crop Line 19.1' N.W.
3. Edge of Gravel Road 0.9' N.W.
4. North End Bridge Structure 300.0' S.W.

UTILITIES
Communication - Brightspeed
(785) 969-4333

Power - 4 Rivers Electric COOP Inc.
(800) 778-9140

Water - Anderson County RWD 1
(913) 795-2278

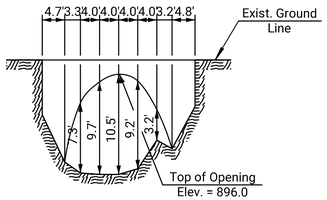

EXISTING WATERWAY OPENING SKETCH
Existing Effective Waterway Opening - 156 sq. ft.

℄ Sta. 60+06.00 Construct
Br. No. 000021047405289
50' Weathering Steel Beam,
Simple (WBMS) Bridge
Skew 15° Rt.,
24'-0" Roadway
Erection Category A

Tributary of Pottawatomie Creek

Timber

Cultivated

Keegan K. and Whitney E. Barnes
SW4, Section 5, T. 20 S., R. 20 E.

Temp. Esmt. = 110' ℄

Const. Limits

+00 R/W = 45' ℄

+50 R/W = 45' ℄

+25 R/W = Exist. R/W

+75 R/W = Exist. R/W

+75 R/W = 30' ℄

+35 R/W = 65' ℄

PI 56+91.22

PI 63+22.95

Exist. R/W

℄ Project

NE Nevada Rd.

O.W.

BM#

Sta. 60+06.00 ℄ Project = ℄Sta. 50+00.00 Channel Improvement

Sta. 60+07, Remove (Br. No. 000021047405288) 22' Masonry Arch (MAR) Bridge with a 18'-0" Roadway. All material shall become property of the Contractor and Removed from the Site.

Sugar Creek Enterprises
SW4 SE4, S2 SE4
Section 5, T. 20 S., R. 20 E.

SCALE: 1" = 30'
30' 0 30' 60'

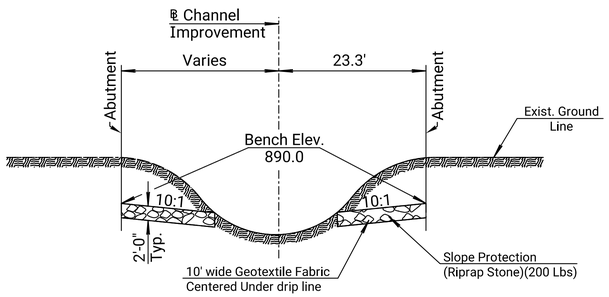

TYPICAL CHANNEL GRADING SECTION
Lt. and Rt. of ℄ Sta. 60+06

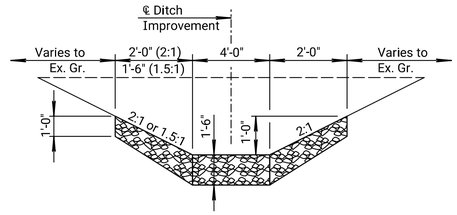

TYPICAL DITCH CUT SECTION
NORTH AND EAST QUADRANTS

BM #1 "T" Post
73.23' Rt., ℄ Sta. 55+71.35, Elev. = 895.38

BM #2 "O" cut East Headwall of Bridge
9.03' Rt., ℄ Sta. 60+06.66, Elev. = 897.50

BM #3 "T" Post
24.12' Rt., ℄ Sta. 64+80.28, Elev. = 907.60

NO.	DATE	REVISIONS	BY	APP'D

KANSAS DEPARTMENT OF TRANSPORTATION

Br. No. P.8-21.2 Sta. 60+06.00

CONTOUR MAP

Proj. No. 2 C-5327-01 Anderson County

DESIGNED	DETAILED	QUANTITIES	CADD
DESIGN CK.	DETAIL CK.	QUAN.CK.	CADD CK.

CADconform Certify This File

Sh. No. 6

Plotted by : bfranz 24-FEB-2026 11:51
File : 006_c532701bbr-01.dgn

CADconform Certify This File

STATE	PROJECT NO.	YEAR	SHEET NO.	TOTAL SHEETS
KANSAS	2 C-5327-01	2026	7	39

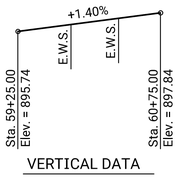

VERTICAL DATA

ELEVATION
50' Weathering Steel Beam,
Simple (WBMS) Bridge
Skew 15° Rt.
24'-0" Roadway

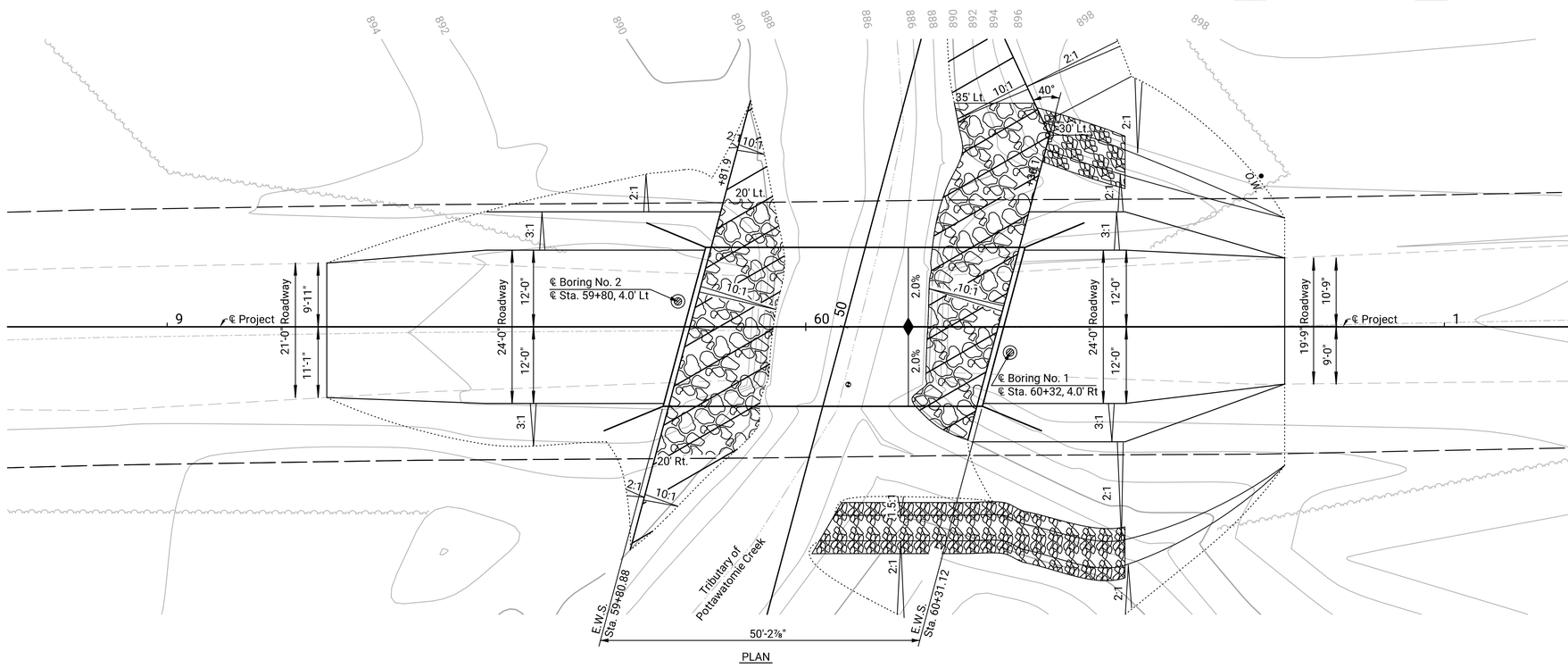

PLAN

DRAINAGE DATA

Drainage Area	2.0	Sq. Mi.
Design Frequency	2	Yr.
Design Discharge (Q2)	839	cfs
Design Highwater Elevation	892.6	Ft.
Change in Backwater at Q2	-1.0	Ft.
Design Backwater Elevation	893.1	Ft.
Overtopping Elevation (Sta. 59+25)	895.7	Ft.
Overtopping Discharge	2,550	cfs
Overtopping Frequency	18	Yr.
Discharge at Q100	4,954	cfs
Change in Backwater at Q100	-0.4	Ft.
Backwater Elevation at Q100	898.4	Ft.
Ordinary Highwater Elevation	886.9	Ft.
Estimated Ordinary High Water Discharge	40	cfs
Total Waterway Provided		
Existing	174	Sq. Ft.
Proposed	261	Sq. Ft.

Average Velocity	Q2 (Design)	Q100
Existing:	5.9 fps	6.5 fps
Proposed:	3.7 fps	5.2 fps

LEGEND

- Gravel/Aggregate Base
- Lean to Fat Clay
- Shale
- Shaley Sandstone

SCALE: 1" = 10'

10' 0 10' 20'

Legend

- Slope Protection (Riprap Stone)(200 lb)
- Aggregate Ditch Lining (4")

BM #1 "T" Post
73.23' Rt., ℄ Sta. 55+71.35, Elev. = 895.38

BM #2 "□" cut East Headwall of Bridge
9.03' Rt., ℄ Sta. 60+06.66, Elev. = 897.50

BM #3 "T" Post
24.12' Rt., ℄ Sta. 64+80.28, Elev. = 907.60

NO.	DATE	REVISIONS	BY	APP'D

KANSAS DEPARTMENT OF TRANSPORTATION

Br. No. P.8-21.2 Sta. 60+06.00

CONSTRUCTION LAYOUT

Project No. 2 C-5327-01 Anderson County

DESIGNED	DETAILED	QUANTITIES	CADD
DESIGN CK.	DETAIL CK.	QUAN.CK.	CADD CK.

CADconform Certify This File

Sh. No. 7

Plotted by : Twhitson 24-FEB-2026 11:59
File : 007_c5327011bbr-02.dgn

CADconform Certify This File

DATE	BY	
		REFERENCES NOTED
		REFERENCES CHECKED

STATE	PROJECT NO.	YEAR	SHEET NO.	TOTAL SHEETS
KANSAS	2 C-5327-01	2026	8	39

SUMMARY OF QUANTITIES	
	Structural Steel
	A709 Gr. 50W Lbs.
Walers	2,300
Pile Cap Stiffeners	70
Pile Cap (2@HP10x42x27'-0")	2,270
Pile Plate	140
Totals	4,780

	Beam 1	Beam 2	Beam 3	Beam 4	Beam 5	Beam 6	Beam 7
Shim Thickness	0"	15/16"	1 15/16"	2 7/8"	1 15/16"	15/16"	0"

Note: Shims shall be 10½"x 12" ASTM A709 Gr. 36 filler plates with thickness specified above.

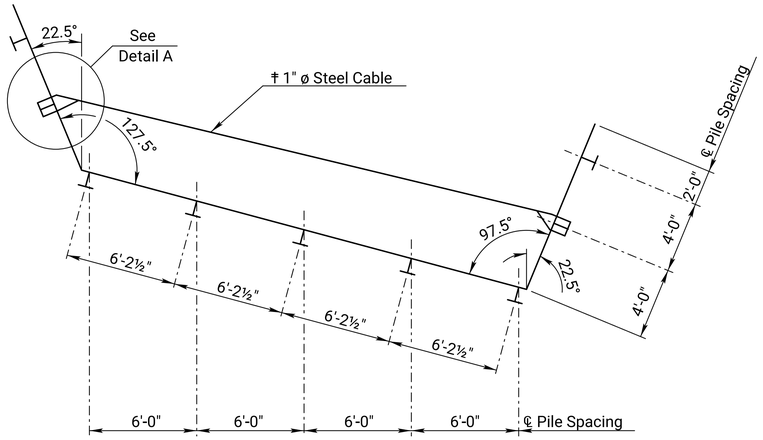

ABUTMENT PLAN

Scale: ¼" = 1'-0"

† All work, materials, and equipment needed for installation of the 1" Steel Cable Bracing shall be subsidiary to the line item "Piles (Corrugated Metal Sheet)"

◔ Cut Flush with Finished Grade. Field Verify Prior to Field Cut.

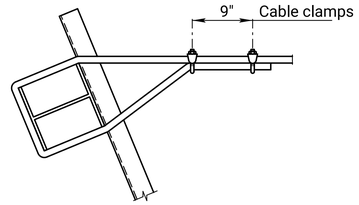

DETAIL A

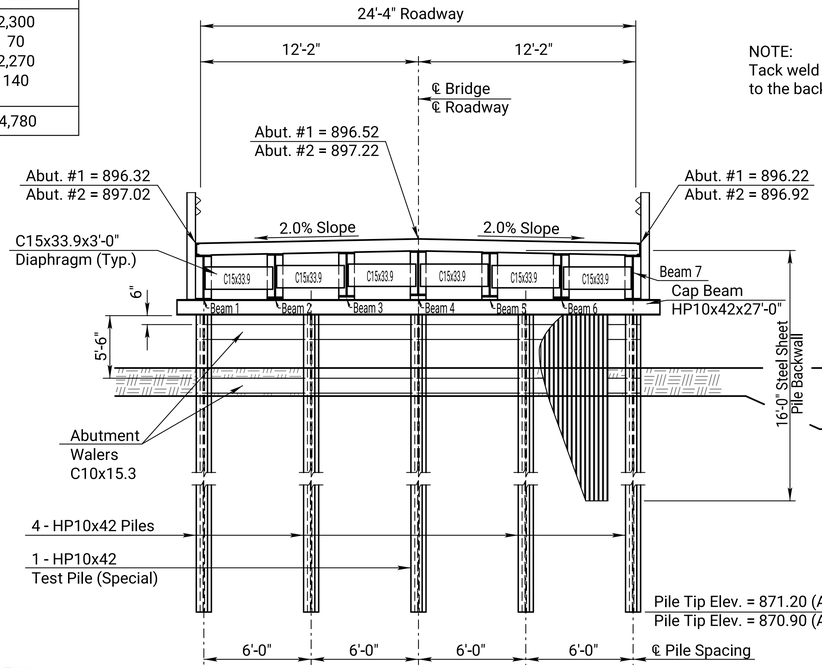

NOTE:
Tack weld the Steel Sheet Pile to the backside of the H-Piles.

ABUTMENT ELEVATION

Scale: ¼" = 1'-0"

Note: Shims shall conform to ASTM A709 Grade 36 standards. And Plates, Cap Beams, and Whalers shall conform to ASTM A709 Grade 50W standards Quantities for these items are referenced on sht. 9.

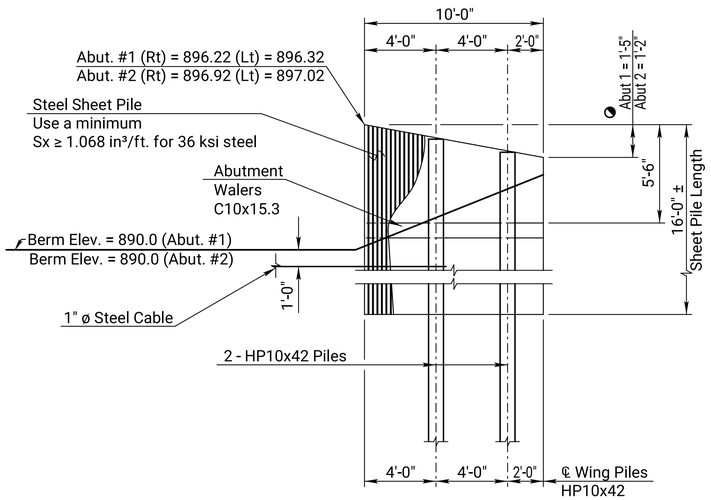

WINGWALL DETAIL

Scale: ¼" = 1'-0"

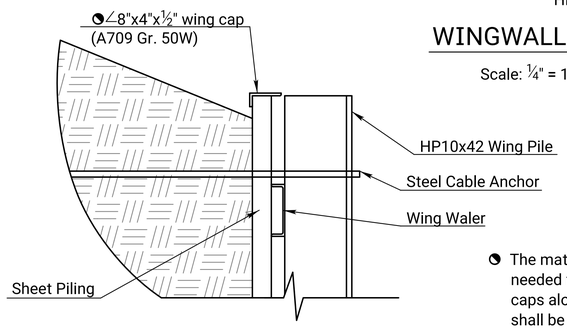

SECTION THROUGH WING

◔ The materials, labor, and equipment needed for installation of wing & abut. caps along the top of each wingwall shall be subsidiary to the bid item "Piles (Corrugated Metal Sheet)".

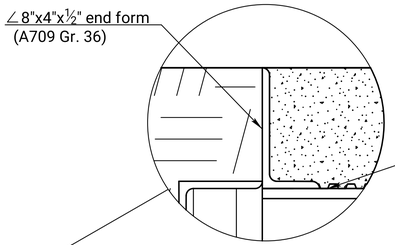

END FORM DETAIL

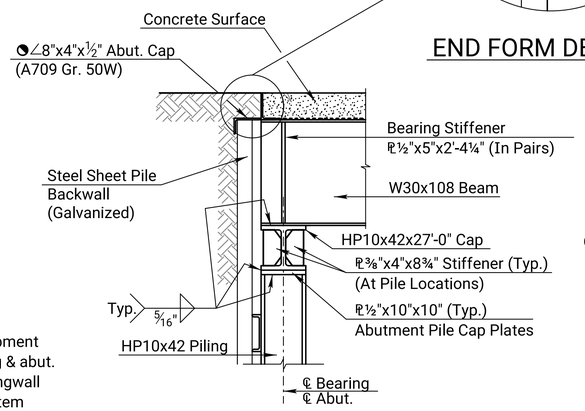

TYPICAL ABUTMENT SECTION

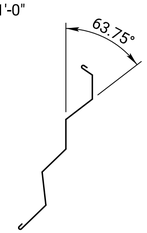

SHEET PILE CORNERS MK. 63.75° TYPE F

2 Required

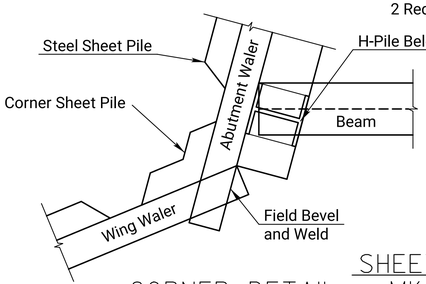

CORNER DETAIL

Approach End



SHEET PILE CORNERS MK. 48.75° TYPE F

2 Required

CORNER DETAIL

Exit End

Br. No. P.8-21.2	Sta. 60+06.00
ABUTMENTS AND WINGS	
Project No. 2 C-5327-0	Anderson County

STATE	PROJECT NO.	YEAR	SHEET NO.	TOTAL SHEETS
KANSAS	2 C-5327-01	2026	9	39

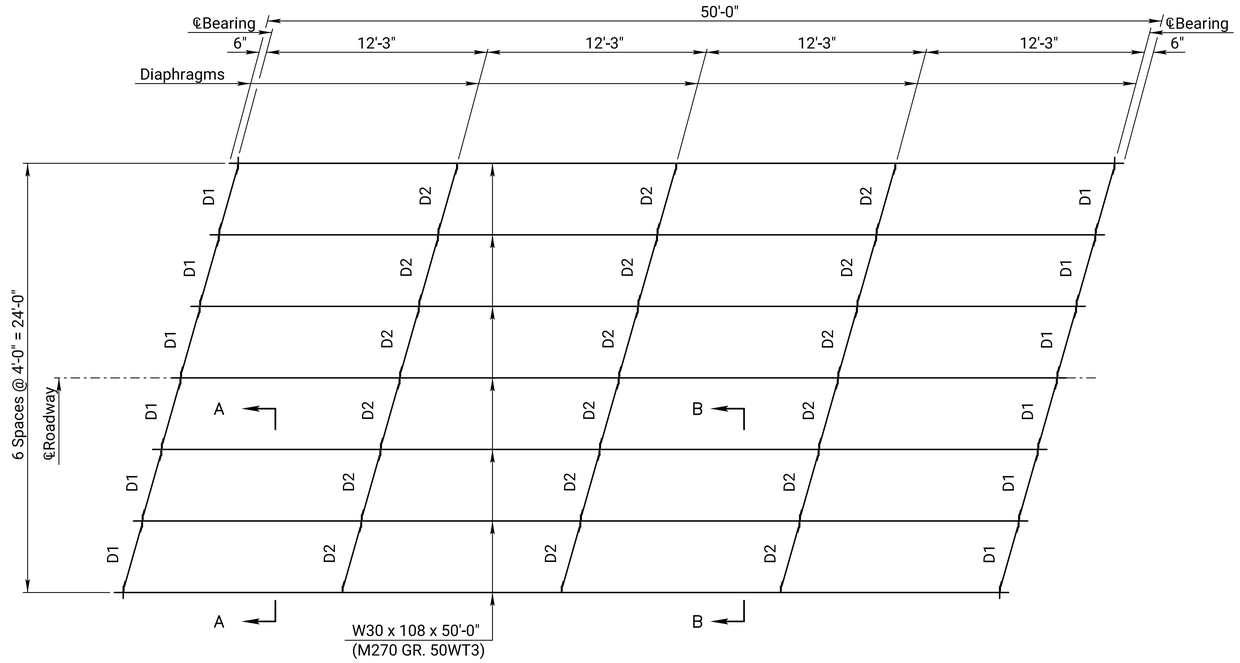

FRAMING PLAN

Scale: ¼" = 1'-0"

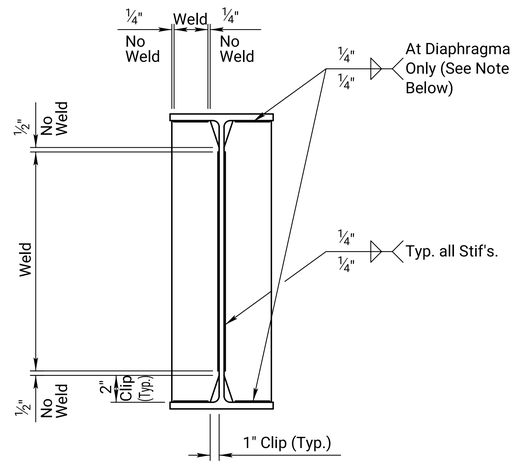

INTERMEDIATE STIFFENER DETAIL

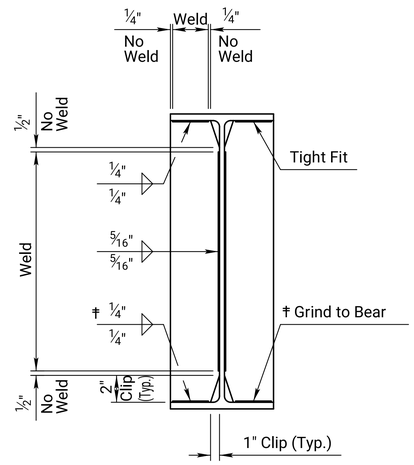

BEARING STIFFENER WELD DETAILS

MATERIALS LIST		
Description	Quantity	Unit
Beams (W30 x 108 x 50'-0")	7	Each
Diaphragms (D1)	12	Each
Diaphragms (D2)	18	Each
Gusset Plates (⅜"x5"x5"x1'-1")	60	Each
Stiffeners Intermediate (⅜" x 4¾" x 2'-4⅜")	36	Each
Stiffeners Bearing (½" x 5" x 2'-4⅜")	28	Each
Edge Form (C8" x 11.5# x 25'-1½")	4	Each
End Form (L8"x4"x½"x 12'-11")	4	Each
Shim Plates (7½" x 12" x Varies)	10	Each
Pile Caps (HP10" x 42# x 27'-0")	2	Each
Pile Cap Stiffeners (₧⅜"x4"x8¾")	20	Each
Pile Cap Plate (₧½"x10"x10")	10	Each
Abutment Walers (C10" x 15.3# x 27'-0")	4	Each
Wing Walers (C10" x 15.3# x 10'-6")	4	Each

SUMMARY OF QUANTITIES			
	Structural Steel		
	A709 Gr. 36 Lbs.	A709 Gr. 50W Lbs.	M270 Gr. 50WT3 Lbs.
Beams			37,800
Diaphragms		3,030	
Gusset Plates		830	
Stiffeners		520	
Bearing Stiffeners		560	
Edge Form	1,160		
End Form	1,010		
Shim Plates	620		
Totals	2,790	4,940	37,800

GENERAL NOTES

DESIGN: HL-93, AASHTO Specifications, 2020 Edition, and latest Interim Specifications, Load and Resistance Factor Design.

STRUCTURAL STEEL: Beams shall meet the requirements for AASHTO M270 Grade 50WT3 Stiffeners and diaphragms shall meet the requirements for ASTM A709 Grade 50W. The end and edge form channel shall meet the requirements for ASTM A709 Grade 50W, but may be ASTM A709 Grade 36 or Grade 50 with a 3 mil coat of organic zinc primer.

PAINTING TOP FLANGES: Apply a 3 mil primer coat of an approved inorganic zinc primer to the tops of the flanges.

WELDS: All welds shall be ¼" fillet weld unless otherwise noted.

TIGHT FIT: Tight fit is defined as at least 75% of the stiffener shall be in direct contact with the flange for bearing stiffeners. Tight fit is defined as a maximum permissible gap of no more than 1⁄16" between the stiffener and the flange for an intermediate stiffener.

NOTE: See "Summary of Quantities and General Notes" sheet for additional notes.

See Sheet No. 8 for the Substructure Structural Steel Quantities
See Sheet No. 10 for Concrete (Grade 4.0) (AE) (SW) Quantities
See Sheet No. 10 for Reinforcing Steel (Grade 60) Quantities
See Sheet No. 12 for Bridge Rail and Post Options

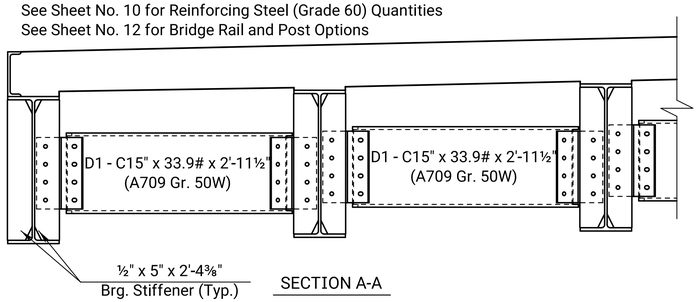

SECTION A-A

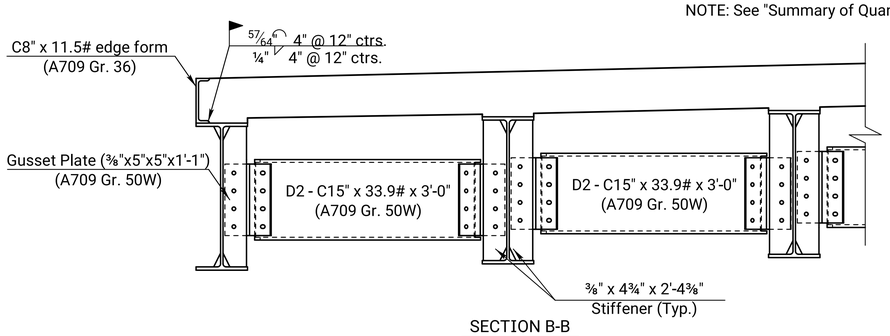

SECTION B-B

NO.	DATE	REVISIONS	BY	APP'D
4				
3				
2				
1				

~~KANSAS DEPARTMENT OF TRANSPORTATION~~

Br. No. P.8-21.2 Sta. 60+06.00

SUPERSTRUCTURE DETAILS

Proj. No. 2 C-5327-01 Anderson County

SHEET NO. OF	SCALE ¼" = 1'-0"	APP'D			
DESIGNED SAA	DETAILED SAA	QUANTITIES SAA	CADD SAA
DESIGN CK. DB	DETAIL CK. DB	QUAN. CK. DB	CADD CK. DB

STATE	PROJECT NO.	YEAR	SHEET NO.	TOTAL SHEETS
KANSAS	2 C-5327-01	2026	10	39

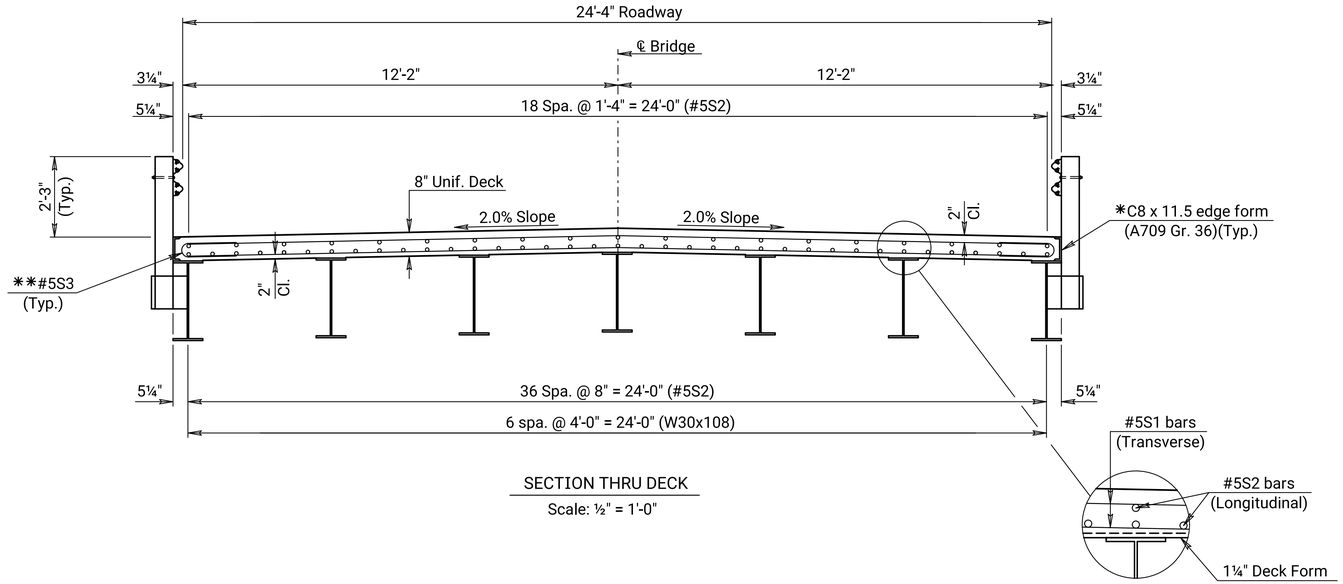

SECTION THRU DECK

Scale: ½" = 1'-0"

DETAIL A

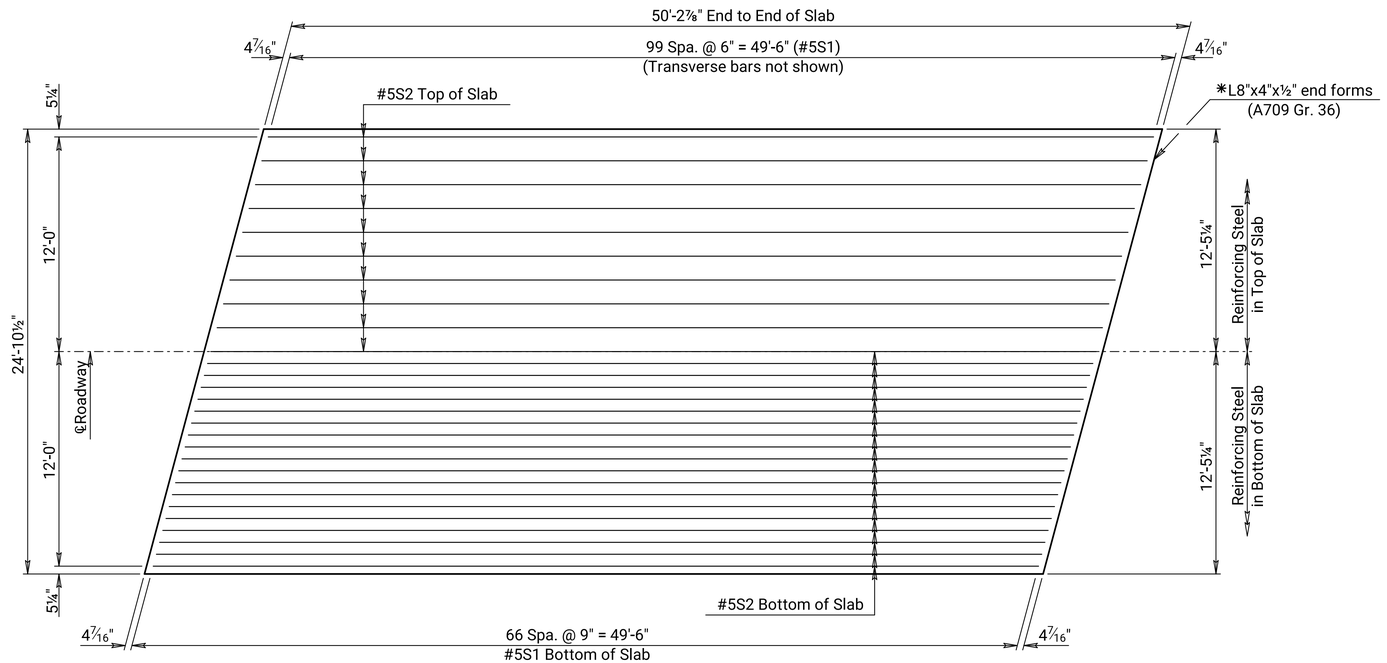

PLAN

Scale: ¼" = 1'-0"

∗Note:
Edge forms consist 2 @ 25'-1½" Lt. and Rt.
plus 2 End forms @ 12'-11" ends Ahead and Back.

∗∗Note:
#5S1 Top of Slab Spliced with #5S3

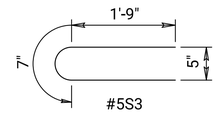

BENDING DIAGRAM

SUMMARY OF QUANTITIES		
Concrete (Grade 4.0) (AE) (SW)	30.9	Cu. Yds.
Reinforcing Steel (Grade 60)	8,160	Lbs.

SCHEDULE OF REINFORCING STEEL					
Bar	S1	S2	S3∗		
Number	167	56	200		
Size	#5	#5	#5		
Length	25'-3"	49'-9"	4'-1"		

∗ See Bending Diagrams

NO.	DATE	REVISIONS	BY	APP'D
4				
3				
2				
1				

~~KANSAS DEPARTMENT OF TRANSPORTATION~~

Br. No. P.8 21.2 Sta. 60+06.00

SUPERSTRUCTURE DETAILS

Proj. No. 2 C-5327-01 Anderson County

SHEET NO. OF		SCALE 1/4" = 1'-0"		APP'D				
DESIGNED	SAA	DETAILED	SAA	QUANTITIES	SAA	CADD		SAA
DESIGN CK.	DB	DETAIL CK.	DB	QUAN. CK.	DB	CADD CK.		DB

STATE	PROJECT NO.	YEAR	SHEET NO.	TOTAL SHEETS
KANSAS	2 C-5327-01	2026	11	39

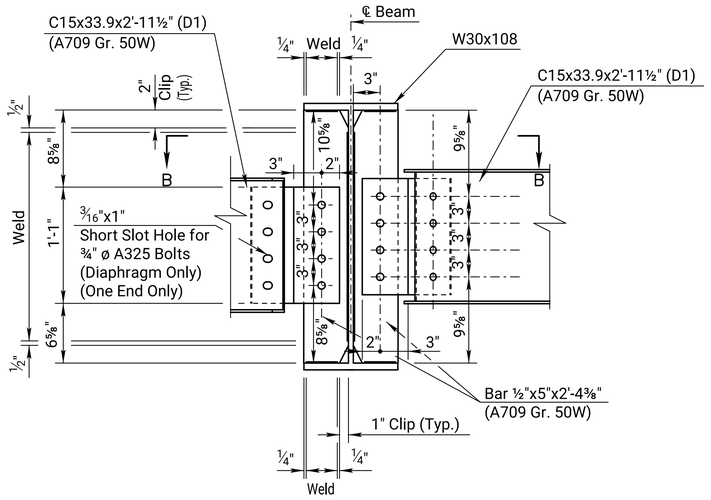

BEARING STIFFENERS

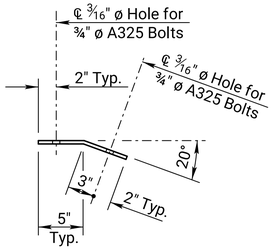

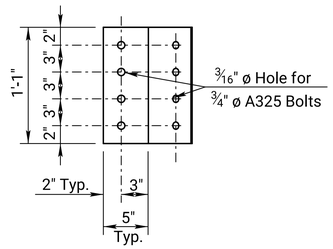

GUSSET PLATE AT DIAPHRAGMS

(60 Required)
(ASTM A709 Gr. 50W)

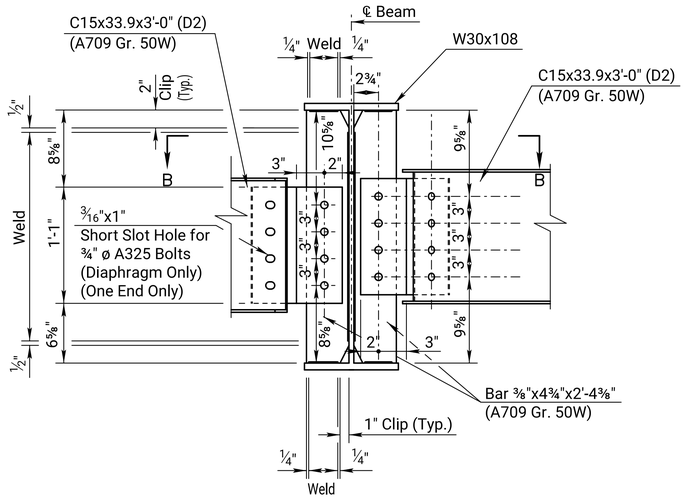

INTERMEDIATE STIFFENERS

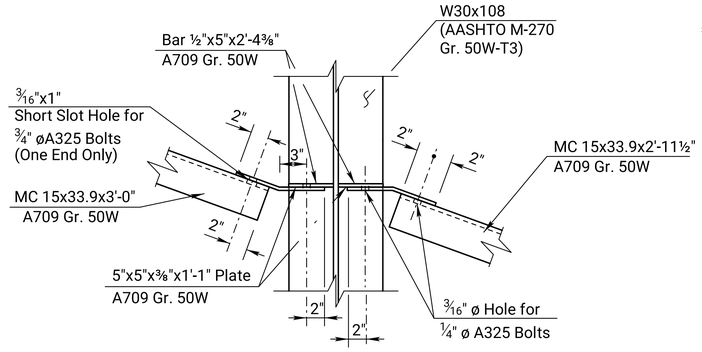

SECTION B-B

BEARING DIAPHRAGM CONNECTION

Scale: 1½" = 1'-0"
(24 Required)
(8 - ⅞" ø x2¼" A325 Bolts/Connection)
(Type 3)(2 Washers and 1 DTI per Bolt)

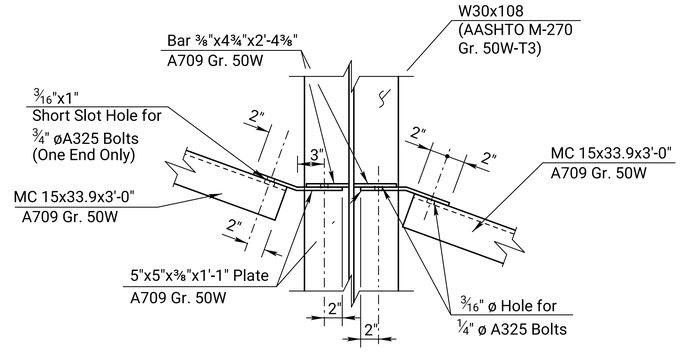

SECTION B-B

INTERMEDIATE DIAPHRAGM CONNECTION

Scale: 1½" = 1'-0"
(36 Required)
(8 - ⅞" ø x2¼" A325 Bolts/Connection)
(Type 3)(2 Washers and 1 DTI per Bolt)

Plotted By: Twhitson | Plot Location:
File: 011_c5327011bbrDiaphragms.dgn
Plot Date: 23-FEB-2026 10:04

KANSAS DEPARTMENT OF TRANSPORTATION

Br. No. P.8-21.2 Sta. 60+06.00

DIAPHRAGM DETAILS

Proj. No. 2 C-5327-01 Anderson Co.

SHEET NO. OF	SCALE 1½" = 1'-0"	APP'D	
DESIGNED S.A.A.	DETAILED S.A.A.	QUANTITIES S.A.A.	CADD S.A.A.
DESIGN CK. D.B.	DETAIL CK. D.B.	QUAN. CK. D.B.	CADD CK. D.B.

STATE	PROJECT NO.	YEAR	SHEET NO.	TOTAL SHEETS
KANSAS	2 C-5327-01	2026	12	39

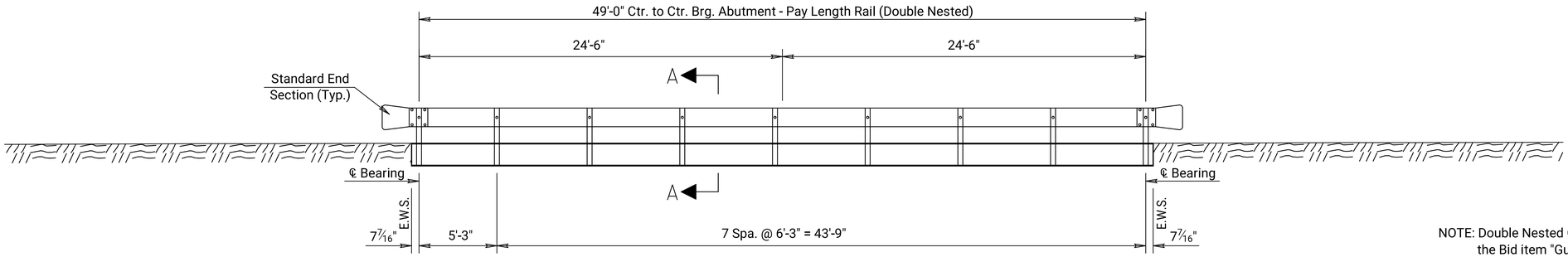

BRIDGE RAIL POST SPACING

NOTE: Double Nested Guardrail is Subsidiary to the Bid item "Guardrail, Steel Plate".

GENERAL NOTES

GUARDRAIL, STEEL PLATE: Steel guardrail bridge rail as shown is only intended for use on low volume local roads and does not meet the AASHTO Specifications and KDOT requirements for a 10 kip load as shown in the details.

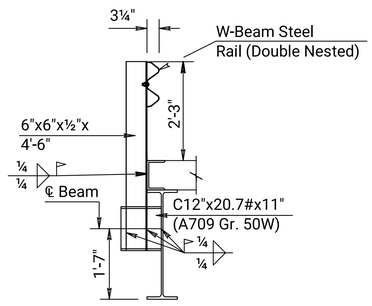

SECTION A-A
(Alternate #1)
(Preferred)

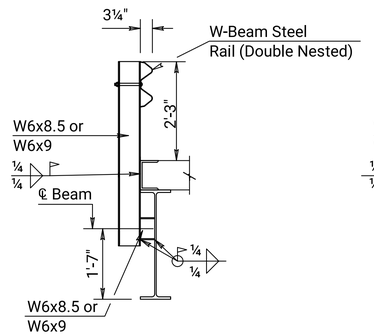

SECTION A-A
(Alternate #2)

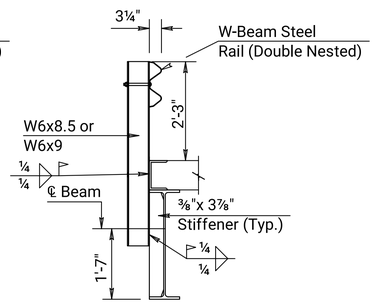

SECTION A-A
(Alternate #3)

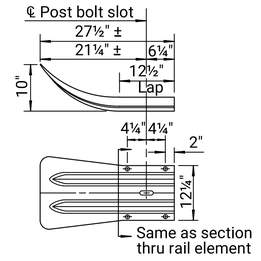

STANDARD END SECTION
(1 each)
(Subsidiary to Steel Plate Guardrail)

NOTE: All materials, structural steel, standard end sections, welding, labor and incidentals shown on this sheet are subsidiary to "Bridge Handrail (Metal)"

NO.	DATE	REVISIONS	BY	APP'D
4				
3				
2				
1				

~~KANSAS DEPARTMENT OF TRANSPORTATION~~

Br. No. P.8 21.2 Sta. 60+06.00

BRIDGE RAIL DETAILS

Proj. No. 2 C-5327-01 Anderson County

SHEET NO. OF		SCALE 1/4" = 1'-0"		APP'D			
DESIGNED	SAA	DETAILED	SAA	QUANTITIES	SAA	CADD	SAA
DESIGN CK.	DB	DETAIL CK.	DB	QUAN. CK.	DB	CADD CK.	DB

STATE	PROJECT NO.	YEAR	SHEET NO.	TOTAL SHEETS
KANSAS	2 C-5327-01	2026	13	39

✳Note: The Grading Contractor shall excavate the channel to the limits shown prior to the construction of the box bridge, unless otherwise noted in the plans.

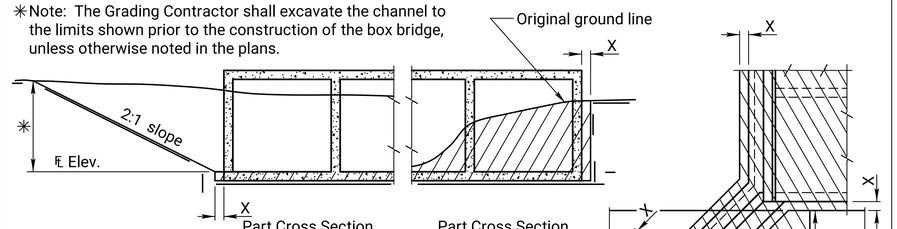

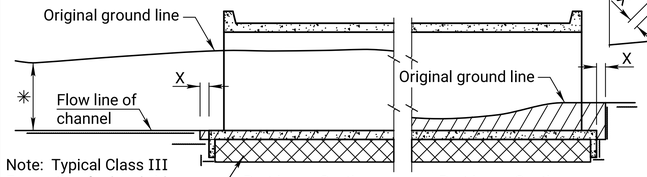

Note: Typical Class III Excavation for box bridges shall be below the "cleared" channel unless otherwise noted on the plans.

Excavation below the elevation of the bottom of the box floor and/or wingwalls is subsidiary to "Foundation Stabilization".

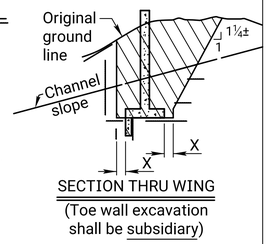

EXCAVATION DETAILS FOR REINFORCED CONCRETE BOX CULVERT

Note: Excavation for culverts less than bridge length and the additional excavation for "Embedded Structures" shall not be paid for as Class III Excavation, but shall be subsidiary to Grade 4.0 Concrete.

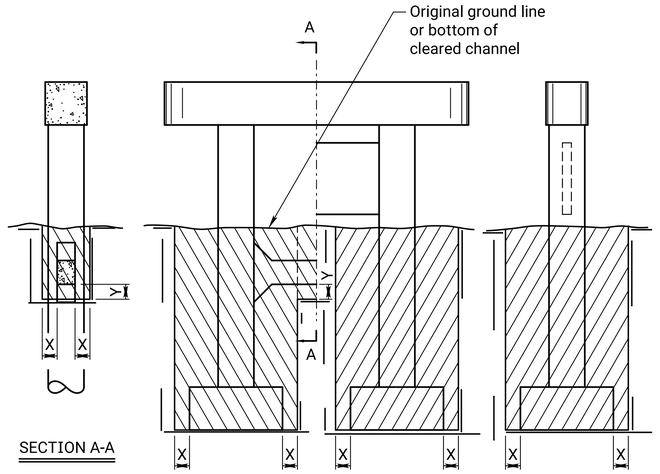

EXCAVATION DETAILS FOR TYPICAL PIERS

See detail when rock or shale (rock) is encountered. ❀

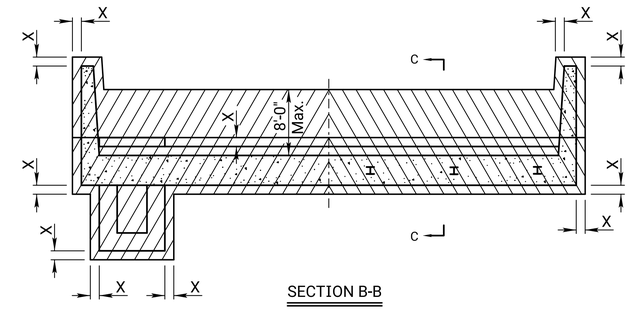

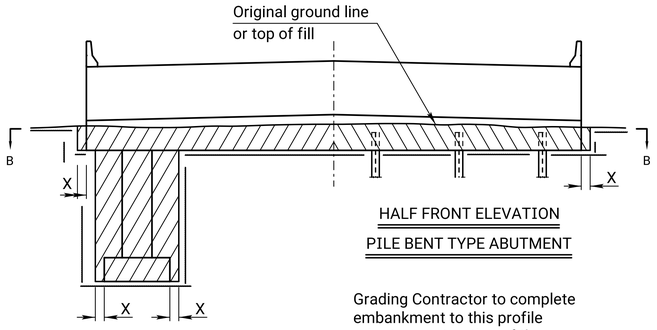

Grading Contractor to complete embankment to this profile prior to construction of the abutment

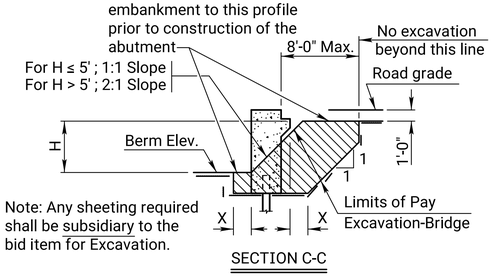

Note: Bridge Contractor shall finish the embankment and berms after the construction of the abutment and dispose of any excess material as approved by the Engineer.

Note: Any sheeting required shall be subsidiary to the bid item for Excavation.

EXCAVATION DETAILS FOR TYPICAL ABUTMENTS

See detail when rock or shale (rock) is encountered. ❀

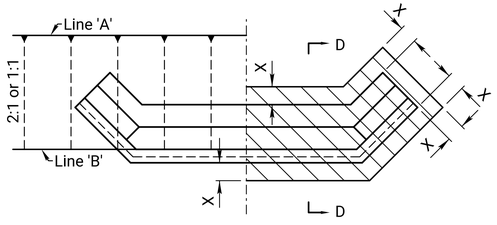

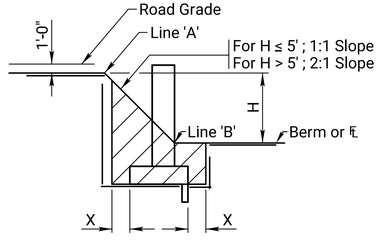

EXCAVATION DETAILS FOR ABUTMENTS WITH FLARED WINGWALLS

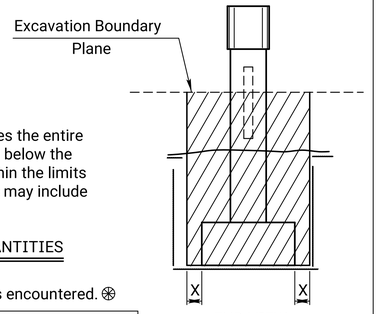

Note: Class II Excavation includes the entire volume of whatever nature found below the "Excavation Boundary Plane", within the limits specified for measurement. This may include water or air.

CLASS II EXCAVATION QUANTITIES

See detail when rock or shale (rock) is encountered. ❀

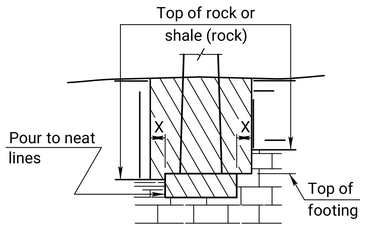

❀ EXCAVATION DETAIL FOR FOOTINGS IN ROCK OR SHALE (ROCK)

(Piers and Abutments)

Note: Excavation below top of rock, hard shale or below top of footing, whichever is lower, shall be to neat lines of the concrete construction.

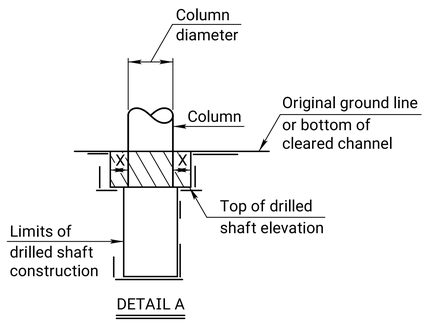

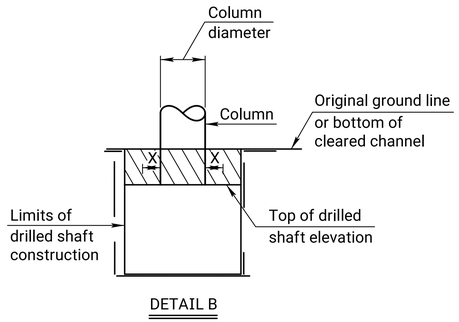

DRILLED SHAFT DETAILS

Note: Whenever the limits of the drilled shaft construction are greater than the Column Diameter + 2X, the limits of Class I, II or III Excavation shall be the limits of the drilled shaft construction. (See Detail B)

Note: All bridge excavation shall be computed on the basis of the cross-hatch areas and boundary lines indicated on this sheet and the Excavation Boundary Plane on the Construction Layout.

Sides of trenches in hard or compacted soil including embankments shall be shored, sheeted, braced or otherwise supported when the trench is more than 5 feet in depth and 8 feet or more in length. In lieu of the shoring, the sides of the trench above the 5 foot level may be sloped to preclude collapse. The slope for average soils shall be 1:1. If the angle of repose of the soil is less, flatter slopes shall be required.

Dimension "X" shall be 2'-0" unless indicated otherwise on the general plans.

Dimension "Y" shall be 1'-6" unless indicated otherwise on the general plans.

NO.	DATE	REVISIONS	BY	APP'D
06	08-15-12	Embedment Excavation Subsidiary	J.P.J.	T.L.F.
05	05-15-12	Revised Wing Excavation	J.P.J.	T.L.F.
04	03-03-10	Revised Wing Excavation	J.P.J.	T.L.F.

KANSAS DEPARTMENT OF TRANSPORTATION

BRIDGE EXCAVATION (LRFD)

BR100B

FHWA APPROVAL		04-17-10	APP'D.	Terry L. Fleck
DESIGNED	DETAILED	R.D.R.	QUANTITIES	TRACED
DESIGN CK.	DETAIL CK.	L.R.R.	QUAN.CK.	TRACE CK.

KDOT Graphics Certified 06-20-2022 Sh. No. 13

KDOT Graphics Certified

Plotted by : Twhitson 23-FEB-2026 10:04
File : 013_c532701bss100b.dgn

STATE	PROJECT NO.	YEAR	SHEET NO.	TOTAL SHEETS
KANSAS	2 C-5327-01	2026	14	39

O D 10¾" T. = ††
O D 12¾" T. = ††
O D 14" T. = ††

†† See the Geology Report or "Summary of Quanities" for Pipe Pile wall thickness

Note:
Pile shall be driven with a steel head having a projecting ring fitting inside the pipe. Clearance between ring and pipe should be ¼".

Note:
Pile pipe may be spiral welded, longitudinal welded, or seamless steel pipe.

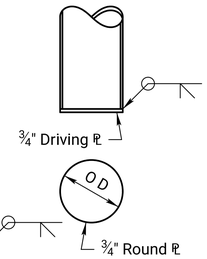

PLAIN ROUND
CAST-IN-PLACE CONCRETE PILES

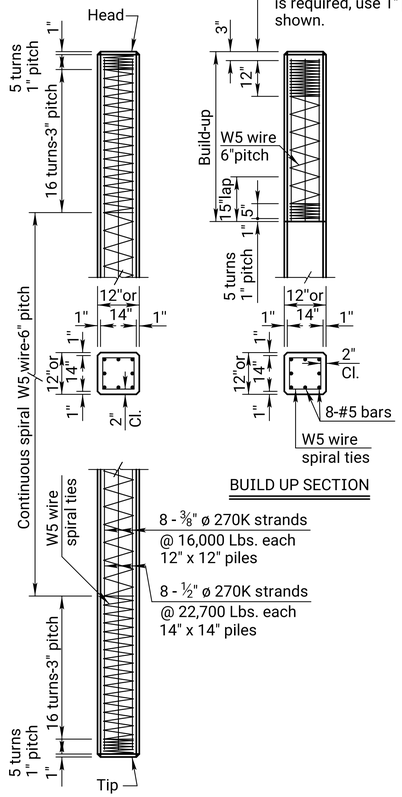

12" OR 14"
PRESTRESSED
CONCRETE PILES

BUILD UP SECTION

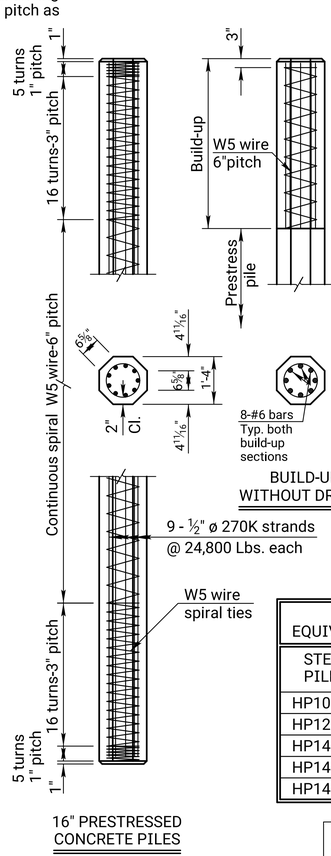

16" PRESTRESSED
CONCRETE PILES

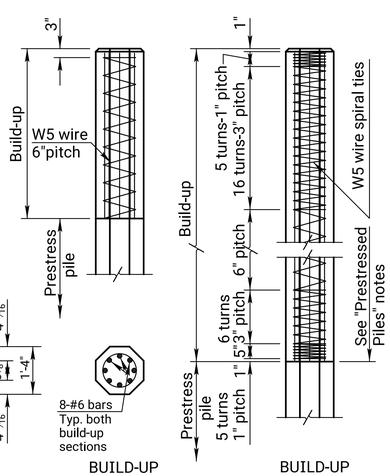

BUILD-UP
WITHOUT DRIVING

BUILD-UP
WITH DRIVING

FOR INFORMATION ONLY EQUIVALENT POINT BEARING PILES		
STEEL PILES	CONCRETE PILES	
	Pipe	Pre-stress
HP10x42	10¾	
HP12x53	12¾	
HP14x73	14	12
HP14x102		14
HP14x117		16

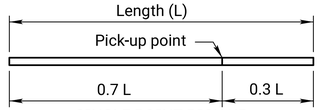

PICK-UP POINTS FOR PRESTRESSED PILING

Max. length - 55' single point pick-up
Max. length - 80' double point pick-up

Note: Piles shall be marked at Pick-up points to indicate proper points for attaching handling lines.



Outside Flange



Inside Flange

SHELL PILE POINT

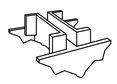

H-Pile Point

CAST STEEL PILE POINT

The pile point shall be a one-piece unit of cast steel. Weld pile points in accordance with manufacturer's recommendations to each steel pile before driving.

Weld Symbology Definition

Use grinder to bevel edges of splice as shown in weld symbology and drawing. In addition to bevels, produce clean, bare, and shiny surfaces at and around the splice welding location.

Lay full penetration root weld from beveled side of splice.

Back gouge root weld from side opposite of root welding application making sure to remove all foreign materials, porous steel, and inclusions from root weld. Finish welding the non beveled side of the splice.

Finish welding beveled side of the splice while removing slag, foreign materials, porous steel, and inclusions in between welding passes, use of a grinder may be needed.

Verify that enough filler metal has been correctly placed in all weld locations to obtain a flush or convex surface with no concavity produced upon completion of the final welds.

GENERAL NOTES

PRESTRESSED PILES: Fabricate prestressed concrete pile splices in accordance with the Manufacturer's recommendations subject to the approval of the Engineer.

Method of attachment of pile to build-up may be by any of the methods given in the notes on "Alternate Methods." If mild reinforcing steel is used for attachment, the area shall be no less than that used in the build-up.

ALTERNATE METHODS: Method of attachment of a pile to build-up may be by any of the following methods:

1. Cut off at least 2'-0" of pile and expose a minimum of 2'-0" of strands.
2. Cast 8-#6, or 8-#5 bars (equally spaced) into pile head. All bars shall extend into pile head and project from pile head a minimum of 2'-0".
3. Drill 8 holes in pile head (equally spaced) for installation of 8 grouted dowel bars of same size and length as in 2.
4. Provide cored holes for bars as in 3.

No bars or strands are to extend from head of pile or build-up into footing or pile cap unless approved by the Engineer.

TEST PILES: Drive test piles where called for on the bridge plans. The test piles located within the limits of the substructure will become a part of the bridge pile system.

DRIVING FORMULA: Driving formula shall conform to the Standard Specifications.

MEASUREMENT AND PAYMENT: Measurement and payment for all piles shall comply with the Standard Specifications.

REINFORCEMENT: Use reinforcing steel conforming to ASTM A615, Grade 60. Hoops and spirals may be either plain or deformed bars.

PRESTRESSING STEEL: Use uncoated seven-wire low relaxation prestressing strand conforming to ASTM A416, Gr. 270.

STEEL PILE: Steel pile shall conform to the requirements of the Standard Specifications.

PILE POINTS: Pile points shall conform to the dimensions shown and to requirements of the Standard Specifications.

SPECIFICATIONS: Standard Specifications for State Road and Bridge Construction as currently used by the Kansas Department of Transportation.

CONCRETE: Concrete for cast-in-place shall be f'c = 3,500 PSI. Concrete for prestressed shall be f'c = 5,000 PSI.

WELDING: All field welding shall meet the requirements of the Standard Specifications.

Use only Shielded Metal Arch Welding SMAW (stick welding) for pile splices.

Use only low hydrogen E7018, 7016, or 7015 series welding rod (electrode) for all welding applications during pile splicing.

New electrodes are to be purchased for each KDOT project. The electrodes shall arrive on the project in factory hermetically sealed containers, opened and labeled with indelible ink in front of the engineer. The label shall include the current date and the project number. If the container seal is questionable or shows signs of damage the electrode is to be dried in an oven at least one hour at a temperature of 700°F to 800°F.

Upon removal from intact hermetically sealed factory packaging or the drying oven the electrode is to be placed in a storage oven with a minimum temperature of 250°F.

When electrodes are removed from the hermetically sealed container or storage oven and exposed to the atmosphere for less than 4 hours place into the storage oven for at least 4 hours before removing for use.

If electrode is exposed to the atmosphere for 4 hours or more (or 9 hours for moisture resistant electrodes designated with an R in their labeling) then electrode can be dried in a drying oven at a temperature of 450°F to 550°F.

If the electrode is exposed to the atmosphere for 4 hours or more a second time or the rod becomes wet discard rod.

CAST-IN-PLACE SHELLS: Steel shells for cast-in-place concrete piles shall conform to the requirements of the Standard Specifications.

All piles driven without a mandrel shall be of the minimum thicknesses shown. Piles driven with a mandrel shall be of sufficient strength and thickness to withstand driving without injury and to resist harmful distortion and/or buckling due to soil pressure after the mandrel is removed.

Remove, replace or correct to the satisfaction of the Engineer improperly driven, broken or otherwise defective pipe piles. Otherwise drive an additional pile at no extra cost.

The Contractor shall maintain a light suitable for visual inspection of the pile on the job at all times prior to and during the filling of the pipe.

PAINT: All paint shall comply with the Standard Specifications, or as specified on the plans.

MILL TEST REPORTS: Steel piles test reports and steel shell test reports shall comply with the Standard Specifications.

SPLICES: Splices for steel piles and shell piling shall be in accordance with details shown on this sheet and the Standard Specifications.

For integral pile bent abutments and piers, if a pile splice is required, do not locate the pile splice within a region extending 2'-0" above and 10'-0" below the bottom of the concrete web wall. For abutments, locate the pile splice at least 10'-0" below top of fill.

With the approval of the Engineer, one splice per bent may be allowed in the region described above without testing. If additional splices are anticipated, based on the geology, the Contractor prior to driving, will locate the splice so that the splice will not fall within the regions described above.

‡ For integral pile bent abutments and piers, if a splice is located within the regions described above, then the Contractor will test the welds by Radiograph (RT) test methods. Repair and retest any welds not passing the test(s). Each weld tested will have written confirmation of results. Report these results to the Engineer. This work is not paid for directly, but is subsidiary to "Piles".

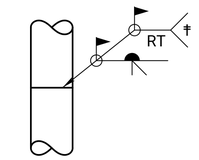

Pipe Section

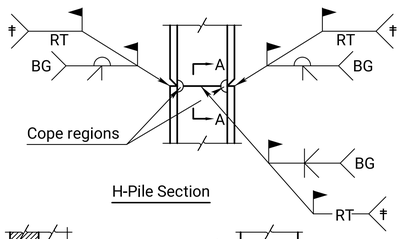

H-Pile Section

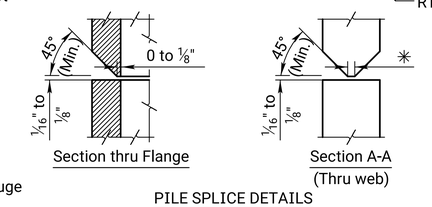

✳ Minimum as required by welding process.

BG = Backgouge

PILE SPLICE DETAILS

NO.	DATE	REVISIONS	BY	APP'D
04	08-16-18	Add splice web section, clarify note	M.L.L.	J.P.J.
03	09-15-15	Clarify Notes	J.P.J.	C.E.R.
02	06-18-12	Clarify f'c, rod type, use and weld	J.P.J.	T.L.F.

KANSAS DEPARTMENT OF TRANSPORTATION

STANDARD PILE DETAILS

BR110

FHWA APPROVAL		10-04-12	APP'D.	Terry L. Fleck
DESIGNED	J.P.J.	DETAILED	QUANTITIES	TRACED R.A.A.
DESIGN CK.		DETAIL CK.	QUAN.CK.	TRACE CK.

KDOT Graphics Certified 06-20-2022 Sh. No. 14

KDOT Graphics Certified

Plotted by : Twhitson 23-FEB-2026 10:04
File : 014_c532701bss110.dgn

STATE	PROJECT NO.	YEAR	SHEET NO.	TOTAL SHEETS
KANSAS	2 C-5327-01	2026	15	39

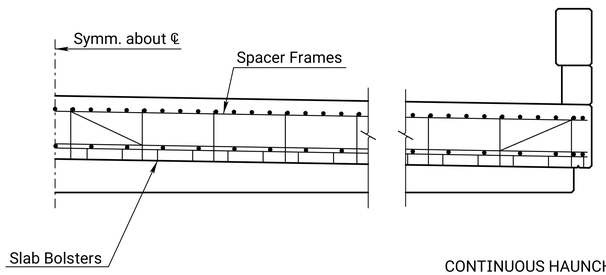

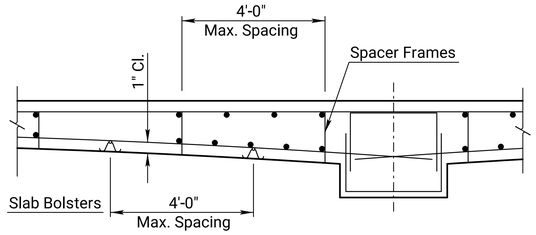

CONTINUOUS HAUNCHED SLAB

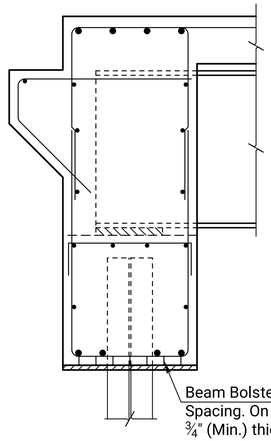

ABUTMENT

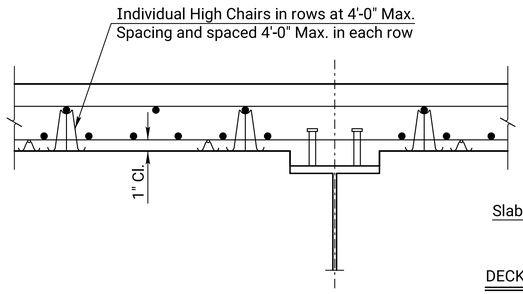

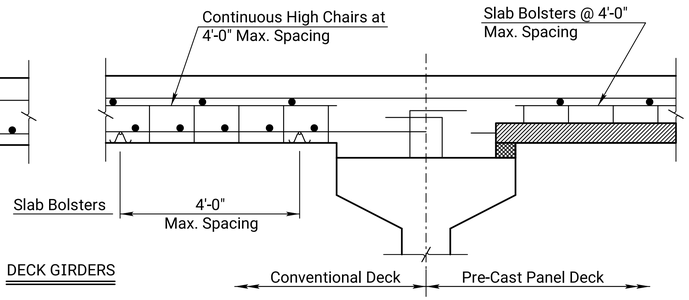

DECK GIRDERS

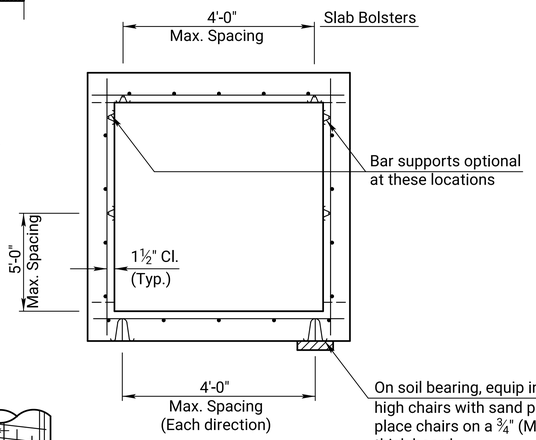

BOX CULVERT

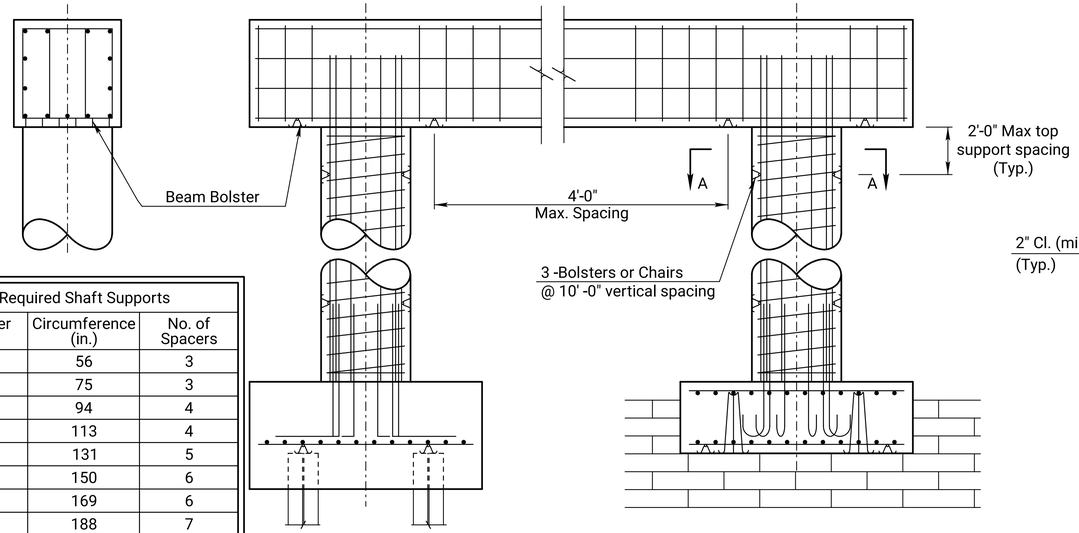

PIER

Required Shaft Supports		
Diameter (in.)	Circumference (in.)	No. of Spacers
18	56	3
24	75	3
30	94	4
36	113	4
42	131	5
48	150	6
54	169	6
60	188	7
66	207	7
72	226	8
78	244	9
84	263	9
90	282	10
96	301	11
102	320	11
108	339	12

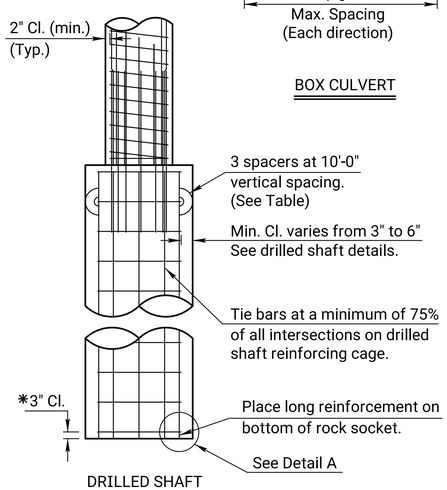

DRILLED SHAFT

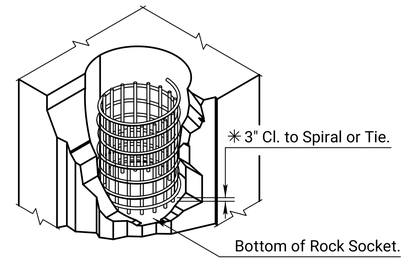

DETAIL A

✳Note: Longitudinal reinforcing steel is placed on the bottom of the rock socket. Maintain 3" clearance from the bottom of rock socket to the first spiral or tie bar.

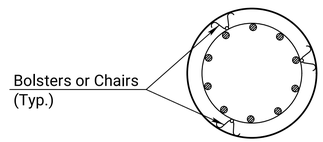

SECTION A-A

GENERAL NOTES

Reference is made to the latest edition of the CRSI "Manual of Standard Practice" for recommended industry practices concerning reinforcing steel.

Use only the following types of bar supports:

1) Wire Bar Supports:

   a) Epoxy coated reinforcing: Class 1 Protection
   b) Non-epoxy coated reinforcing: Class 1, 2, or 3 Protection

2) Plastic Bar Supports

3) Supplementary bars

When securing epoxy coated reinforcement, use tie wires or metal clips that are epoxy or plastic coated.

Do not weld reinforcing steel to bar supports or to other reinforcing steel. Shop weld spacer frames for haunched slabs.

Tie bars at all intersections around the perimeter of each mat and at not less than 2'-0" centers or at every intersection, whichever is greater.

Where more than one length of bar support is required, lap the end legs so they are locked or tied together.

Use proper height supports to maintain the distance between the reinforcing and the formed surface or the top surface of deck slabs within ¼" of that indicated on the plans.

Spacings shown are maximums. Use sufficient supports, as determined by the Engineer, to retain the reinforcing steel in position.

Construct any platforms, required for the support of workers and/or equipment during concrete placement, directly on the forms and not on the reinforcing steel.

Designs and arrangements of Supports or Spacers other than as shown on this sheet, may be used with the permission of the Engineer.

NO.	DATE	REVISIONS	BY	APP'D
05	11-10-10	Column Bar Supports Required	J.P.J.	T.L.F.
04	12-01-05	Drilled Shaft Spiral Steel Placement	J.P.J.	K.F.H.
03	08-21-00	Added Pre-Cast Panel Detail	R.A.M.	K.F.H.

KANSAS DEPARTMENT OF TRANSPORTATION

SUPPORTS AND SPACERS FOR REINFORCING STEEL

BR120

FHWA APPROVAL		11-17-10	APP'D.	Terry L. Fleck	
DESIGNED	R.A.M.	DETAILED	R.A.K.	QUANTITIES	TRACED R.A.K.
DESIGN CK.	L.R.R.	DETAIL CK.	R.A.M.	QUAN.CK.	TRACE CK. R.A.M.

KDOT Graphics Certified 06-20-2022 Sh. No. 15

KDOT Graphics Certified

Plotted by : Twhitson 23-FEB-2026 10:04
File : 015_c532701bss120.dgn

STATE	PROJECT NO.	YEAR	SHEET NO.	TOTAL SHEETS
KANSAS	2 C-5327-01	2026	16	39

RECAPITULATION OF BRIDGE QUANTITIES

BRIDGE NUMBER	STATION	SEE SHEET NO.
000021047405289	60+06	5

RECAPITULATION OF ROAD QUANTITIES

ITEM	QUANTITY	UNIT
Mobilization	Lump Sum	Lump Sum
Contractor Construction Staking	Lump Sum	Lump Sum
Removal of Existing Structures	Lump Sum	Lump Sum
Clearing and Grubbing	Lump Sum	Lump Sum
Common Excavation (Rural Small)	515	Cu. Yd.
Compaction of Earthwork (Type B) (MR-90)	24	Cu. Yd.
Field Office & Laboratory (Type C)	1	Each
Curing Environment	1	Lump Sum
Signing Object Marker (Type III)	4	Each
Aggregate Ditch Lining (6")	46	Ton
Water (Grading)(Set Price)	1	MGAL
Temporary Surfacing Material (Aggregate)(Set Price)	1	Cu. Yd.

AGGREGATE DITCH LINING (6")

Station to Station	Side	Tons
North Quadrant		
60+36 to 60+50	Lt.	10.3
East Quadrant		
60+01 to 60+50	Rt.	35.8
TOTAL		46.1

GENERAL NOTE:

~~On surfacing projects, the 6" of Compaction Type AA, shown for the center portion on the roadbed, is for the purpose of restoring the original Compaction Type AA which may have been lost since grading operations. The exact locations of this Compaction Type AA, which will be required, is to be determined by the Engineer at the time of construction. This work shall be paid under the bid item "Compaction of Earthwork (Type AA)(MR-)".~~

~~Over all structures, unless otherwise directed by the Engineer, where the top of the hubguard is level with or above the finished shoulder grade, the earth cover over the structure slab shall be removed and backfilled with _____ material as directed by the Engineer. The removal of this material will be subsidiary.~~

~~The _____ material used to backfill over the structure shall be paid for at the prices shown in the contract.~~

~~The earth shoulders shall be compacted full depth (Type -MR-) except, when ordered by the Engineer, the top 3" shall be left uncompacted for seeding.~~

~~All side roads and house entrances shall be surfaced with _____ to the R/W line as indicated on the detail. All side roads and house entrances with existing asphalt surface shall be surfaced with _____ at least to the R/W line or to the end of construction, as directed by the Engineer. Each mailbox turnout (ON PROJECTS WHERE STABILIZED SHOULDERS ARE NOT SPECIFIED) shall be surfaced with _____ to the limits shown on the detail.~~

~~Surfacing material (SA-_____) shall be used for surfacing house entrances and side roads (_____C.Y./SQ. YD.) beyond the limits of the asphalt surface to the limits of construction as determined by the Engineer.~~

~~The thickness of side road and entrance surfacing may be increased to the same thickness as the stabilized shoulder within the approximate limits of the shoulder.~~

~~On projects which specify both asphalt base and surface course materials, side roads, house entrances and mailbox turnouts may be surfaced with both materials at the contractors option, with the approval of the Engineer.~~

Quantities for aggregate for shoulders, AS-1, are calculated on the basis of 150 lbs. per cu. ft. Quantities for stabilized base course, AB-3, are calculated on the basis of 156 lbs. per cu. ft. Weight/cu. ft. includes moisture allowed by specification.

The base course shall be constructed to the plan thickness as shown.

Thicknesses indicated for all construction which is paid for on a weight or volume basis are approximate and may vary to correct for unevenness in the foundations or for other normal unevenness encountered in placement operations.

A tack coat of SS-1HP shall be provided between each lift of all base courses and surface courses and under the first lift of base or surface courses when they are placed on an existing asphalt, brick, or concrete surface, when so ordered by the Engineer and at the rate designated by him. Quantities are included for these tacks calculated at the rate of 0.06 gal. /sq. yd.

Asphalt Material quantities are calculated on the basis of 8.328 lbs. per gal.

Shoulder rumble strips will not be constructed as part of this project.

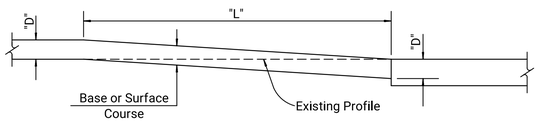

TYPICAL PROFILE AT GRADE CONTROL POINTS

The Contractor shall cut the subgrade in accordance with this profile at all grade control points, i.e.; existing pavements, grade bridges and R.R. crossings, also at changes in thickness of base or surface courses. Corresponding dimensions of "D" and "L" shall be as given in the table below.

The work of cutting the subgrade and disposing of excess excavated material shall be subsidiary to other items in the contract.

TABLE OF DIMENSIONS

D	L	D	L	D	L	D	L	D	L	D	L
1"	25'	3"	75'	5"	125'	7"	175'	9"	225'	11"	275'
2"	50'	4"	100'	6"	150'	8"	200'	10"	250'	12"	300'

SUMMARY OF QUANTITIES

ITEM						TOTAL	UNITS
Surfacing Material (AB-3)						94.8	Tons

Note:
Transition from Sta. 59+25 (21.0') to Sta. 59+50 (24.0')
Sta. 59+50 (24.0') to Sta. 59+81 (24.0')
Sta. 60+31 (24.0') to Sta. 60+50 (24.0')
Transition from Sta. 60+50 (24.0') to Sta. 60+75 (19.7')
Rate of AB-3 Base = 156 lbs. per cu. ft.

RATES OF APPLICATION

RATE	UNIT	ITEM		

† Computed at the rate of
†† Computed at the rate of

RECAPITULATION OF QUANTITIES

ITEM				TOTAL	UNIT
Surfacing Material (AB-3)				95	Tons

STATE	PROJECT NO.	YEAR	SHEET NO.	TOTAL SHEETS
KANSAS	2 C-5327-01	2026	17	39

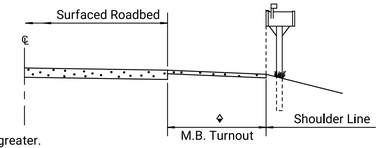

♦ Width shall be 8' or shoulder width, whichever is greater.

SECTION A-A

Note: The face of Mail Box should be no closer to the roadway than the edge of the shoulder. Align with edge of turnout when turnout width is greater than shoulder width.

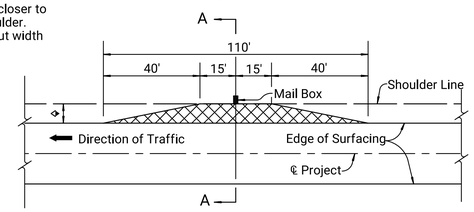

DETAIL FOR SURFACING OF MAIL BOX TURNOUTS

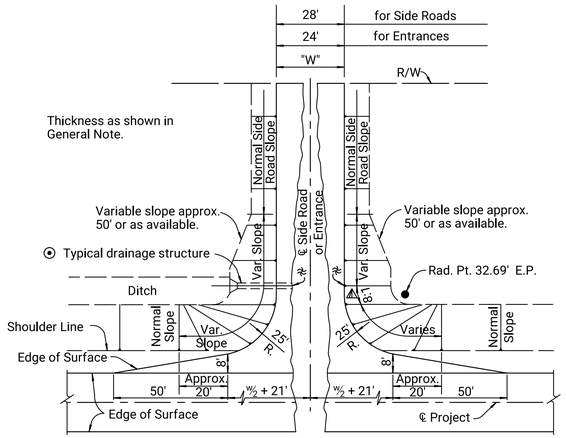

WITH DRAINAGE STRUCTURE — MOUND ENTRANCE OR SIDE ROAD

DETAIL FOR SURFACING OF SIDE ROADS & HOUSE ENTRANCES

⚠ 8:1 Slope at the appropriate clear zone shall apply to all mound entrances and mound side roads to 10' fill height. Normal Slope (but not steeper than 6:1) for over 10' fill height.

⊙ Normal Slope (but not steeper than 6:1) at approximate ℄ Structure or appropriate clear zone width.

✲ On side roads and entrances which slope toward the highway, a low point approx. 6" deep shall be constructed to divert surface drainage into the high-way ditch, unless otherwise shown on the plans.

NO.	DATE	REVISIONS	BY	APP'D
12	01-10-07	Changed bituminous to asphalt	S.W.K.	J.O.B.
11	08-30-06	Changed tack type/rate	S.W.K.	J.O.B.
10	03-24-05	Revised compaction, tack type/rate	S.W.K.	J.O.B.

KANSAS DEPARTMENT OF TRANSPORTATION

SUMMARY OF QUANTITIES (Surfacing)

RD051

FHWA APPROVAL	09-06-06	APP'D.	James O. Brewer
DESIGNED	DETAILED	QUANTITIES	TRACED
DESIGN CK.	DETAIL CK.	QUAN.CK.	TRACE CK.

CADconform Certify This File

Sh. No. 17

Plotted by: Twhitson 23-FEB-2026 10:04
File: 017_c532701rsq051.dgn

CADconform Certify This File

STATE	PROJECT NO.	YEAR	SHEET NO.	TOTAL SHEETS
KANSAS	2 C-5327-01	2026	18	39

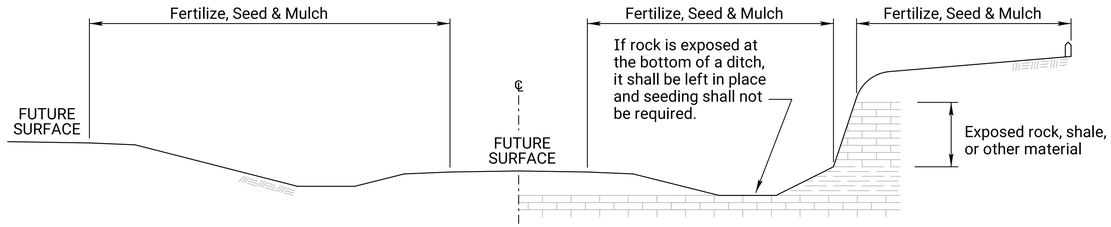

RAMP CUT SECTION

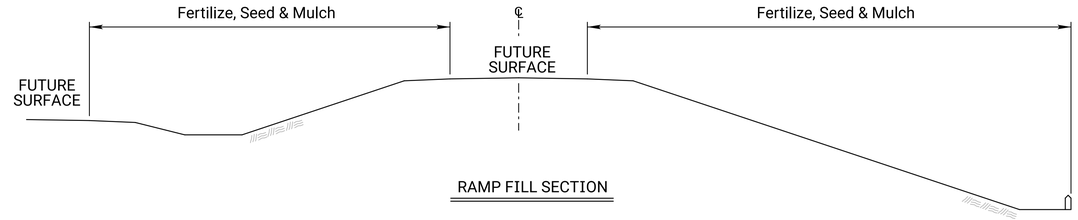

RAMP FILL SECTION

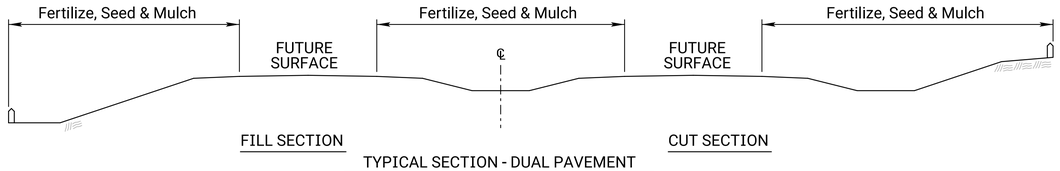

TYPICAL SECTION - DUAL PAVEMENT

FERTILIZER: A ratio and application rate that equals or exceeds the required minimum rate per acre of N, P_2O_5, K_2O listed in Summary of Quantities will be acceptable.

* - N = Nitrogen Rate of Application
** - P_2O_5 = Phosphorous Rate of Application
*** - K_2O = Potassium Rate of Application

The Contractor will be required to finish areas of excavation, borrow and embankment in accordance with the specifications. Areas that require installation or construction of temporary water pollution control items will be finished in reasonable close conformity to the alignment, grade and cross section shown on the plans or as established by the Engineer.

CLT = Construction Limit Tract. This area is defined by the entire disturbed area of the project that requires seeding and erosion control measures to be placed. Any impervious areas (i.e. pavement, gravel, riprap, etc.) shall not be included in this measurement.

Slope = Defined by the area of the project that requires Class 1 erosion control material to be placed. This area shall be seeded using the Soil Erosion Mix prior to placement of the material. Drilling seed is preferred, however, broadcasting is acceptable if drilling is not possible.

Channel = Defined by the area of the project that requires Class 2 erosion control material to be placed. This area shall be seeded using the Soil Erosion Mix prior to placement of the material. Drilling seed is preferred, however, broadcasting is acceptable if drilling is not possible.

GENERAL NOTES

The entire disturbed area, excepting the paved or surfaced areas, steep rocky slopes and areas of undisturbed native sod or other desirable vegetation shall be fertilized (limed when required), seeded, and mulched. Soil preparation shall conform to the Standard Specifications.

Temporary seeding shall be done during any time of the year that the soil can be cultivated. After the temporary seeding has been completed on the entire project, permanent seeding shall be done during the normal seeding season.

MULCHING: Mulch shall be spread uniformly over all disturbed areas and punched in the soil, unless otherwise noted on the plans. The rate of application per acre, thickness in place, for the mulching materials is generally as follows:

1¾ - 2¼ Tons per Acre = 1½" loose depth spread uniformly over acre.

Agricultural products, such as native prairie hay, used for mulching and erosion control practices, excluding wood based mulch, shall meet the North American Weed Free Forage Standards.
Other vegetative mulches are acceptable only with the Engineer's concurrence.

The above rate is a guide. It will be at the discretion of the Engineer to determine what rate is sufficient for adequate protection of newly seeded areas.

SUMMARY OF SEEDING / EROSION CONTROL QUANTITIES

P.L.S. RATE/ ACRE		ACRES		BID ITEM	QUANTITY	UNIT
CLT	SL/CH	CLT	SL/CH			
	150		0.10	Temporary Fertilizer (15 - 30 - 15)	15.0	LB
				Temporary Seed Mix		LB
	109.9		0.10	Soil Erosion Mix	11.0	LB
				Erosion Control (Class 1, Type C)	506	SQ YD
				Erosion Control (Class 2, Type Y)		SQ YD
				Sediment Removal (Set Price)	1	CU YD
				Synthetic Sediment Barrier		LF
				Temporary Berm (Set Price)	1	LF
				Temporary Ditch Check (Rock)		CU YD
				Temporary Inlet Sediment Barrier		EACH
				Temporary Sediment Basin		CU YD
				Temporary Slope Drain		LF
				Temporary Stream Crossing		EACH
				Biodegradable Log (9")		LF
				Biodegradable Log (12")		LF
				Biodegradable Log (20")		LF
				Filter Sock (****)		LF
				Geotextile (Erosion Control)	500	SQ YD
				Silt Fence		LF
				SWPPP Design †		LS
				SWPPP Inspection †		EACH
				Water Pollution Control Manager †		EACH
900 lbs / acre				Mulch Tacking Slurry		LB
2 tons / acre		0.10		Mulching	1	TON
				Water (Erosion Control) (Set Price)	1	MGAL

NOTE: Projects less than 1 acre shall be bid as "Seeding" by the lump sum. See Permanent Seeding Summary of Seeding Quantities sheet LA850 for further details. HECP, Erosion Control (Class I or II) or Hay Mulch shall be used at no additional cost to the project.

Geotextile (Erosion Control) shall be removed prior to placement of permanent slope protection.

Regreen and Quick Guard are the approved sterile wheatgrass products.

† If the total disturbed area of the project, not just the seeding area, is 1 acre or more, then these bid items must be included.

**** List size of material.

The amount of mulch in the bid quantities is estimated. (Acres of Seeding X 1.5 X 2 Tons/Acre).
The amount of mulch tacking slurry in the bid quantities is estimated. (Acres of Seeding X 1.5 X 900 Lbs/Acre).
The estimated quantity includes mulching associated with both temporary and permanent seeding operations. The total mulch and mulch tacking slurry required shall be determined in the field. The bid item for mulching and mulch tacking slurry shall be paid for according to the Standard Specifications.

Quantities for all erosion control items are estimated to give full flexibility for compliance with the NPDES permit. Final quantities will be determined in the field.

SOIL EROSION MIX

PLS RATE	NAME	QTY (lb)
0.5	Seed (Blue Grama (Lovington))	0.05
4.5	Seed (Buffalograss (Treated))	0.45
45	Seed (Perennial Ryegrass)	4.50
2.6	Seed (Praire Junegrass)	0.26
6.3	Seed (Side Oats Grama (El Reno))	0.63
45	Seed (Tall Fescue (Endophyte Free))	4.50
6	Seed (Western Wheat (Barton))	0.60
109.9	Total (lb)	10.99

The Soil Erosion Mix is to be placed under the Class 1 and/or Class 2 erosion control material.

The Soil Erosion Mix consists of the Shoulder Area of the Permanent Seed Mix used on the project.

TEMPORARY SEED MIX

PLS RATE	NAME	QTY (lb)
	Canada Wildrye	
	Grain Oats	
	Sterile Wheatgrass	
	Total (lb)	

NO.	DATE	REVISIONS	BY	APP'D
04	09-12-24	Added mulch tacking slurry rate & Temp Seed Mix Table	M.R.D.	M.L.
03	08-03-20	Added Note	M.R.D.	M.L.
02	12-01-17	Revised Standard	M.R.D.	S.H.S.

KANSAS DEPARTMENT OF TRANSPORTATION

TEMPORARY EROSION AND POLLUTION CONTROL

LA852A

FHWA APPROVAL		03-27-25	APP'D.	Mervin Lare	
DESIGNED	M.R.D.	DETAILED	M.R.D.	QUANTITIES	TRACED
DESIGN CK.	S.H.S.	DETAIL CK.	S.H.S.	QUAN.CK.	TRACE CK.

Plotted by : Twhitson 23-FEB-2026 10:38
File : 018_c532701ewp852a.dgn

STATE	PROJECT NO.	YEAR	SHEET NO.	TOTAL SHEETS
KANSAS	2 C-5327-01	2026	19	39

EROSION CONTROL- CLASS 1, TYPE C

STATION TO STATION	SIDE	LENGTH	WIDTH	SQ YARD	Slope (Class 1)
Channel					
49+08 to 49+77	Rt & Lt	69'	Varies	143.4	Varies
49+70 to 49+86	Rt	16'	Varies	6.8	10:1
50+24 to 50+42	Rt	18'	Varies	10.0	10:1
Main Line					
59+25 to 59+78	Rt	53'	Varies	35.9	3:1
59+25 to 59+91	Lt	66'	Varies	51.6	Varies
60+01 to 60+75	Rt	74'	Varies	180.2	Varies
60+34 to 60+75	Lt	41'	Varies	77.9	Varies
TOTAL EROSION CONTROL (CLASS 1, TYPE C) =				505.8	

Plotted by : Twhitson 23-FEB-2026 10:05
File : 019_c532701eec852a-ec.dgn

NO.	DATE	REVISIONS	BY	APP'D
01	09-12-24	Modified table to add Slope for Cl. 1 Blanket Install.	M.E.C.	M.L.

KANSAS DEPARTMENT OF TRANSPORTATION

EROSION CONTROL SEEDING-SODDING

LA852A-EC

FHWA APPROVAL	03-27-25	APP'D.	Scott H. Shields		
DESIGNED	M.R.M.	DETAILED	M.R.M.	QUANTITIES	TRACED M.R.M.
DESIGN CK.	S.H.S.	DETAIL CK.	S.H.S.	QUAN.CK.	TRACE CK. S.H.S.

STATE	PROJECT NO.	YEAR	SHEET NO.	TOTAL SHEETS
KANSAS	2 C-5327-01	2026	20	39

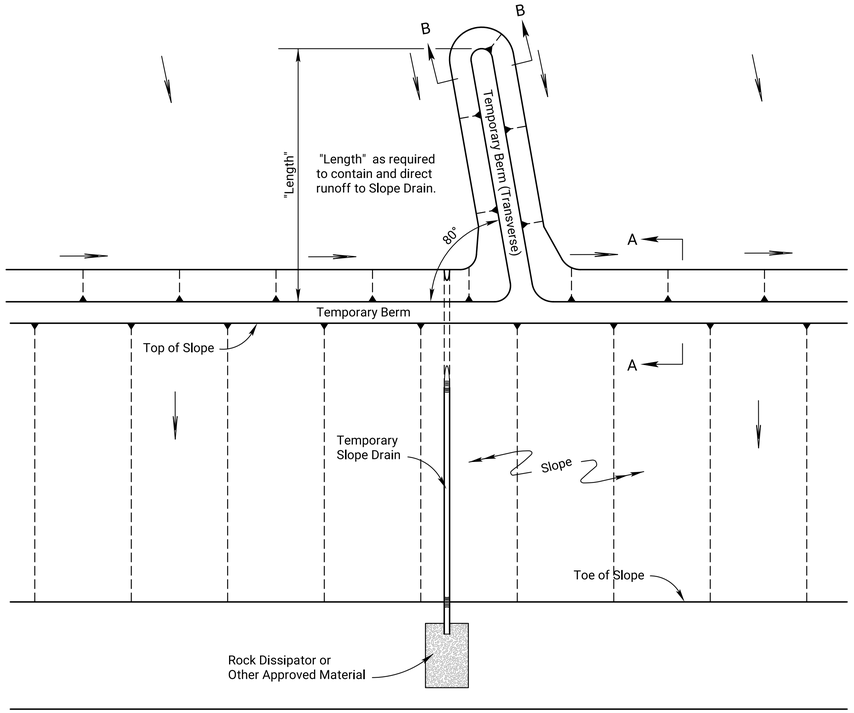

TYPICAL PLAN VIEW OF TEMPORARY BERM AND TEMPORARY SLOPE DRAIN

NO SCALE

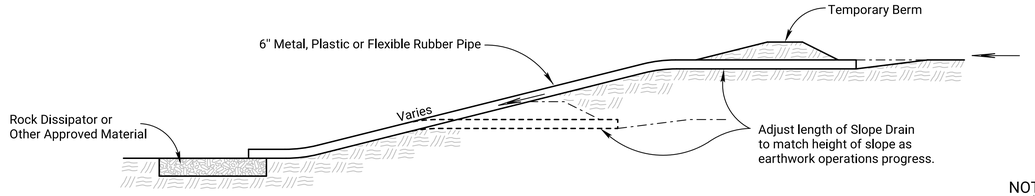

TYPICAL PROFILE OF TEMPORARY SLOPE DRAIN

NO SCALE

NOTES:

1) Temporary Slope Drain and Temporary Berm may be used on either project foreslopes or project backslopes.

2) Discharge of Slope Drains shall be into stabilized ditch or area, or into Sediment Basin.

3) Pipe shall be secured in place as approved by Engineer.

4) Temporary Berms under 2,000 feet shall be bid by Set Price.

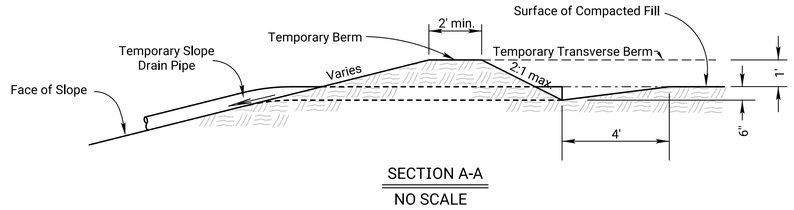

SECTION A-A

NO SCALE

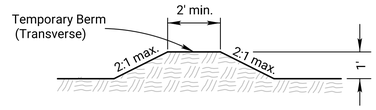

SECTION B-B

NO SCALE

TYPICAL PROFILE OF TEMPORARY BERM

NO SCALE

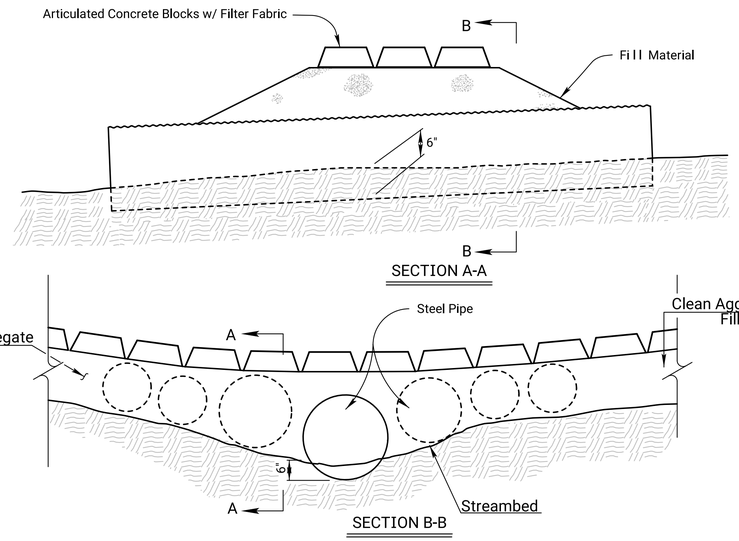

TEMPORARY STREAM CROSSING (ARTICULATED CONCRETE BLOCKS)

NO SCALE

Pipe size may vary.

Place 1 pipe buried 6" into stream bottom, in the lowest point of the channel to allow the passage of aquatic organisms, with additional pipes placed along the remainder of the stream channel bottom such that ordinary high water (OHW) flows designated in the Contract Documents shall flow through the pipes without overtopping the crossing.

Clean aggregate fill will extend a minimum of 50' on the entrance and exit side of the crossing to prevent tracking. The aggregate shall be clean aggregate and a minimum of 6" thick and will be maintained through the use of the crossing.

See KDOT Specifications for more information.

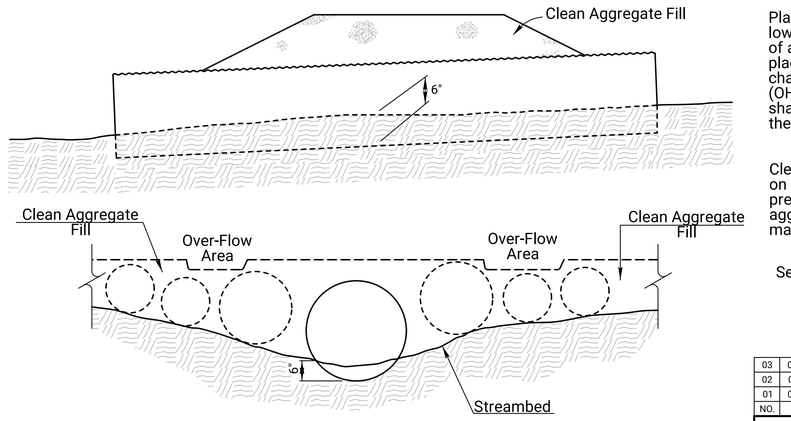

SECTION B-B

TEMPORARY STREAM CROSSING (AGGREGATE)

NO SCALE

Pipe size may vary.

Place 1 pipe buried 6" into stream bottom, in the lowest point of the channel to allow the passage of aquatic organisms, with additional pipes placed along the remainder of the stream channel bottom such that ordinary high water (OHW) flows designated in the Contract Documents shall flow through the pipes without overtopping the crossing.

Clean aggregate fill will extend a minimum of 50' on the entrance and exit side of the crossing to prevent tracking. The aggregate shall be clean aggregate and a minimum of 6" thick and will be maintained through the use of the crossing.

See KDOT Specifications for more information.

NO.	DATE	REVISIONS	BY	APP'D
03	01-21-22	Temp Stream Crossing - Clean Aggregate Fill Note Added	M.R.D.	M.L.
02	08-24-21	Temp Stream Crossing - Clean Aggregate Fill Note Added	M.R.D.	M.L.
01	06-11-13	Revised Standard	M.R.M.	S.H.S.

KANSAS DEPARTMENT OF TRANSPORTATION

TEMPORARY EROSION AND POLLUTION CONTROL TEMPORARY SLOPE DRAIN, TEMPORARY STREAM CROSSING (AGGREGATE)

LA852B

FHWA APPROVAL	01-21-22	APP'D.	Mervin Lare
DESIGNED	DETAILED	QUANTITIES	TRACED
DESIGN CK.	DETAIL CK.	QUAN.CK.	TRACE CK.

KDOT Graphics Certified 06-17-2022 Sh. No. 20

KDOT Graphics Certified

Plotted by : Twhitson 23-FEB-2026 10:05
File : 020_c532701eec852b.dgn

STATE	PROJECT NO.	YEAR	SHEET NO.	TOTAL SHEETS
KANSAS	2 C-5327-01	2026	21	39

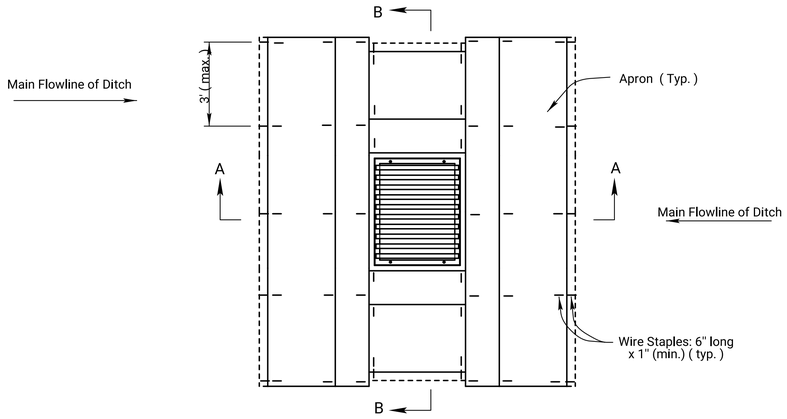

PLAN

TEMPORARY I NLET SEDI MENT BARRI ER
(TRI ANGULAR SI LT DI KE METHOD)

NO SCALE

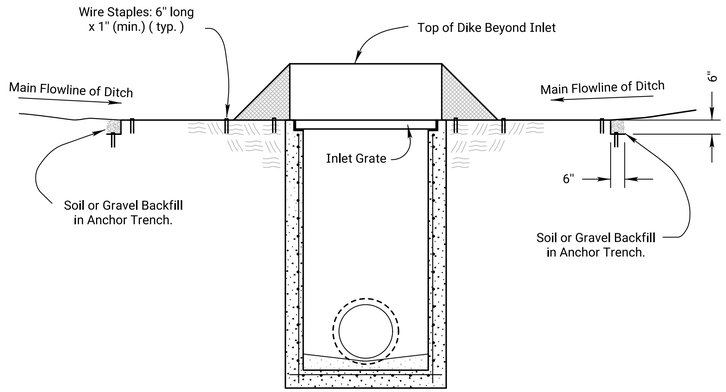

SECTION A - A

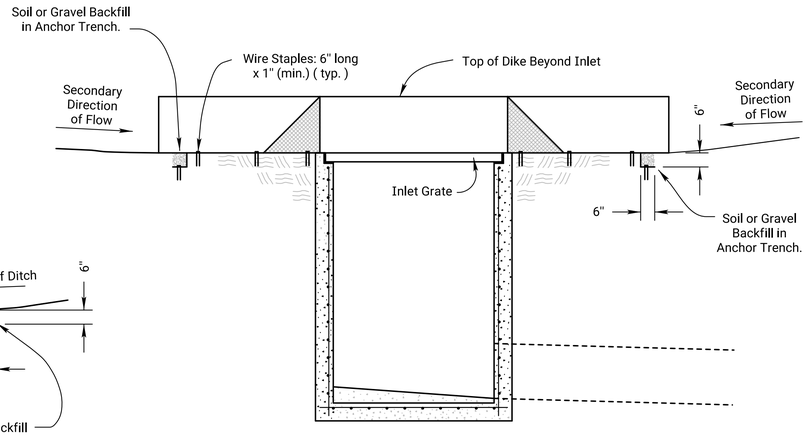

SECTION B - B

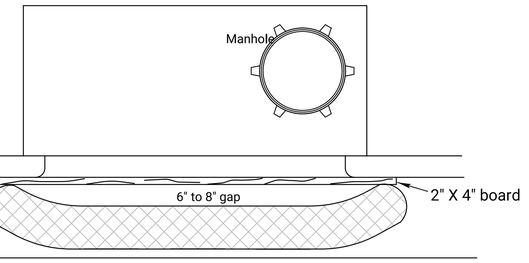

CURB INLET PROTECTION

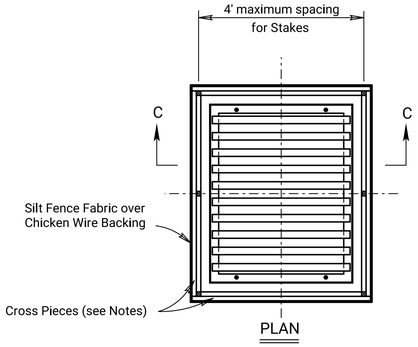

PLAN

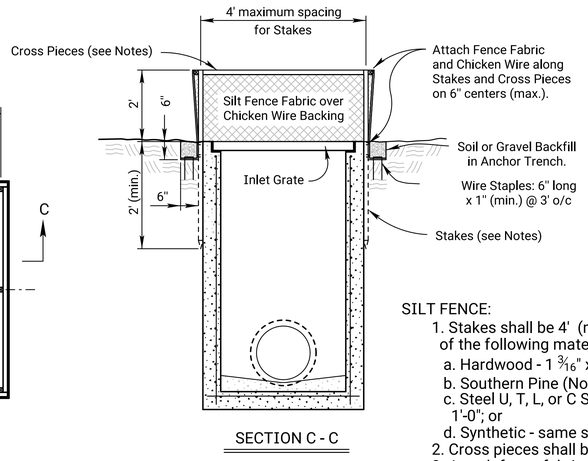

SECTION C - C

TEMPORARY I NLET SEDI MENT BARRI ER
(SI LT FENCE METHOD)

NO SCALE

SILT FENCE:

1. Stakes shall be 4' (min.) long and of one of the following materials:
   a. Hardwood - 1 3/16" x 1 3/16",
   b. Southern Pine (No. 2) - 2 5/8" x 2 5/8";
   c. Steel U, T, L, or C Section - .95 lbs. per 1'-0"; or
   d. Synthetic - same strength as wood stakes.
2. Cross pieces shall be of same material as stakes.
3. Attach fence fabric securely on 6" centers (max).
4. Use of high flow material is acceptable.
5. Refer to plan sheets to estimate the length of silt fence required.

Bags = synthetic net (3mm mesh) or burlap bags

Rock = approximately 1" to 2" diameter

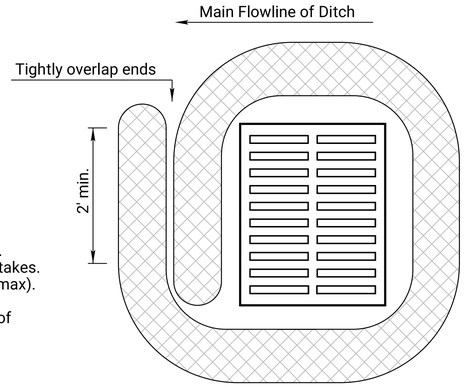

Drop inlet use
1'-6" TO 1'-8" diameter log

BIODEGRADABLE LOG/FILTER SOCK
DROP INLET PROTECTION

Note: 25% of log shall be keyed into ground during installation.

Stake every 4'

1. If multiple gravel bags are required, place them in such a way that no gaps are evident.
2. Height of bags (8" minimum diameter) must not be above top of curb.
3. Alternative products may be used other than gravel bags such as the "Gutter Buddy". Products must be approved by the Engineer.
4. Curb inlet protection will be measured and paid for as Filter Sock.

Material Requirements
Use 100% shredded mulch or other non-compost biodegradable material as fill for logs.
No compost or fines.
No hay or straw.
Do not use material which prohibits water infiltration.
Log Mesh: Use mesh with ¼" openings or larger. Mesh must allow water infiltration but also hold fill material in place.

NO.	DATE	REVISIONS	BY	APP'D
03	09-26-19	Changed Direction of Main Flowline of Ditch Arrow	M.R.D.	S.H.S.
02	03-10-15	Revised Standard	R.A.	S.H.S.
01	06-01-13	Revised Standard	M.R.M.	S.H.S.

KANSAS DEPARTMENT OF TRANSPORTATION

TEMPORARY EROSION AND POLLUTION CONTROL, TEMPORARY INLET SEDIMENT BARRIER (SILT FENCE) TEMP. INLET SEDIMENT BARRIER (T.S.D.) LA852C

FHWA APPROVAL			03-10-15	APP'D.		Scott H. Shields	
DESIGNED	R.A.	DETAILED	R.A.	QUANTITIES		TRACED	
DESIGN CK.	S.H.S.	DETAIL CK.	S.H.S.	QUAN.CK.		TRACE CK.	

KDOT Graphics Certified 07-14-2022 Sh. No. 21

KDOT Graphics Certified

Plotted by : Twhitson 23-FEB-2026 10:05
File : 021_c532701eec852c.dgn

STATE	PROJECT NO.	YEAR	SHEET NO.	TOTAL SHEETS
KANSAS	2 C-5327-01	2026	22	39

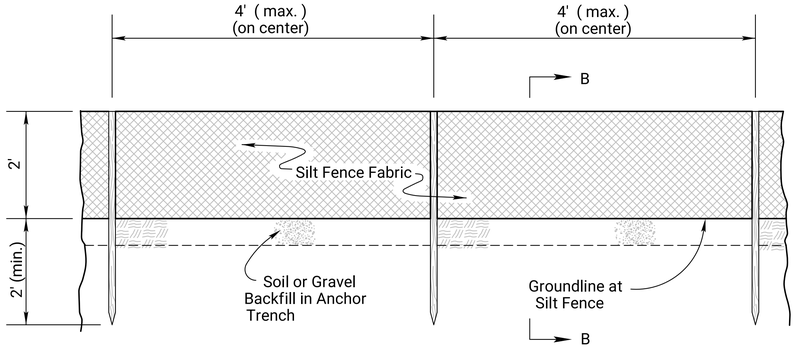

TYPICAL ELEVATION

SILT FENCE BARRIER

NO SCALE

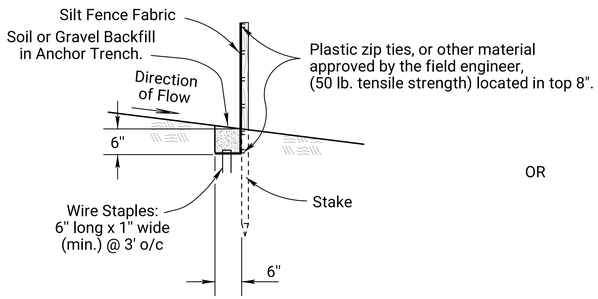

SECTION B-B

OR

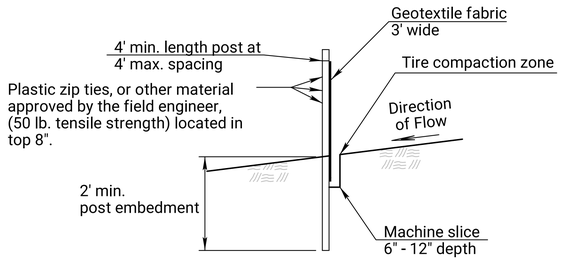

SECTION B-B

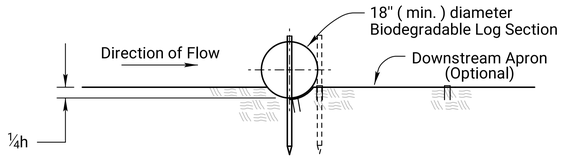

SECTION A - A

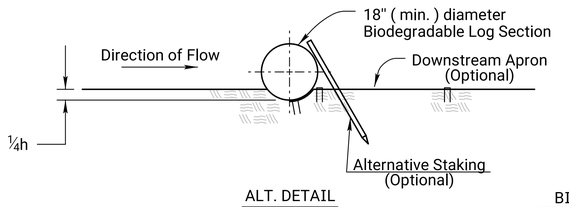

ALT. DETAIL

OPTIONAL

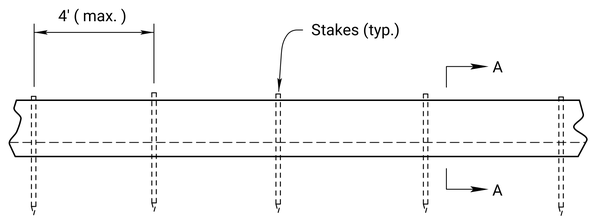

TYPICAL ELEVATION

BIODEGRADABLE LOG SLOPE INTERRUPTIONS

OR Filter Sock

INSTALLATION NOTES

SILT FENCE:

1. Stakes shall be 4' (min.) long and of one of the following materials:
   a. Hardwood - 1 3/16" x 1 3/16";
   b. Southern Pine (No. 2) - 2 5/8" x 2 5/8";
   c. Steel U, T, L, or C Section - .95 lbs. per 1'-0"; or
   d. Synthetic - same strength as wood stakes.
2. Attach fence fabric with 3 zip ties within the top 8" of the fence
   Alternate attachment methods may be approved by the Engineer on aperformance basis.
3. Use of high flow material is acceptable.
4. Refer to plan sheets to estimate the length of silt fence required.

BIODEGRADABLE LOG OR FILTER SOCK

1. Place biodegradable logs or filter sock tightly together minimum overlap of 18".
2. Wood stakes shall be 2" x 2" (nom.).
3. Refer to plan sheets to estimate length of biodegradable log and filter sock required.
4. Each log or sock (except compost filter socks) should be keyed into the ground at a minimum of 25% of its height. Compost filter socks should be placed on smooth prepared ground with no gaps between the sock and soil.
5. Length of stakes should be 2 times the height of the log at a minimum with minimum ground embedment equal to the height of the log / sock.

Biodegradable Log or Filter Sock Slope Interruptions

Slope Gradient	PRODUCT: 9" Sediment Log or 8" Filter Sock (ft)	12" Sediment Log or 12" Filter Sock (ft)	20" Sediment Log or 18" Filter Sock (ft)
≤4H:1V	40	60	80
3H:1V	30	45	60

Deviations should be approved by the Field Engineer.

BIODEGRADABLE LOG MATERIAL		
	LOW FLOW	HIGH FLOW
9"	Straw/Compost	Excelsior / Wood Chips / Coconut Fiber
12"	Straw/Compost	Excelsior / Wood Chips / Coconut Fiber
18"-20"	Straw/Compost	Excelsior / Wood Chips / Coconut Fiber

GENERAL NOTES

1) Slope interruptions shall be placed along contour lines, with a short section turned upgrade at each end of the barrier.
2) The maximum length of the slope interruptions shall not exceed 250 feet, and the barrier ends need to be staggered.
3) Interruptions damaged by Contractor's negligence, including improper maintenance or lack of maintenance, shall be repaired immediately by Contractor at no additional cost to KDOT.
4) Agricultural products, such as native prairie hay, used for mulching and erosion control practices, excluding wood based mulch, shall meet the North American Weed Free Forage Standards.

NO.	DATE	REVISIONS	BY	APP'D
03	06-28-16	Revised Standard	R.A.	S.H.S.
02	03-01-15	Revised Standard	R.A.	S.H.S.
01	06-01-13	Revised Standard	M.R.M.	S.H.S.

KANSAS DEPARTMENT OF TRANSPORTATION

TEMPORARY EROSION AND POLLUTION CONTROL SLOPE INTERRUPTIONS BIODEGRADABLE LOG / SILT FENCE

LA852D

FHWA APPROVAL		09-14-16	APP'D.	Scott H. Shields	
DESIGNED	S.H.S.	DETAILED	R.A.	QUANTITIES	TRACED
DESIGN CK.	S.H.S.	DETAIL CK.		QUAN.CK.	TRACE CK.

KDOT Graphics Certified 06-18-2022 Sh. No. 22

KDOT Graphics Certified

Plotted by : Twhitson 23-FEB-2026 10:05
File : 022_c532701eec852d.dgn

STATE	PROJECT NO.	YEAR	SHEET NO.	TOTAL SHEETS
KANSAS	2 C-5327-01	2026	23	39

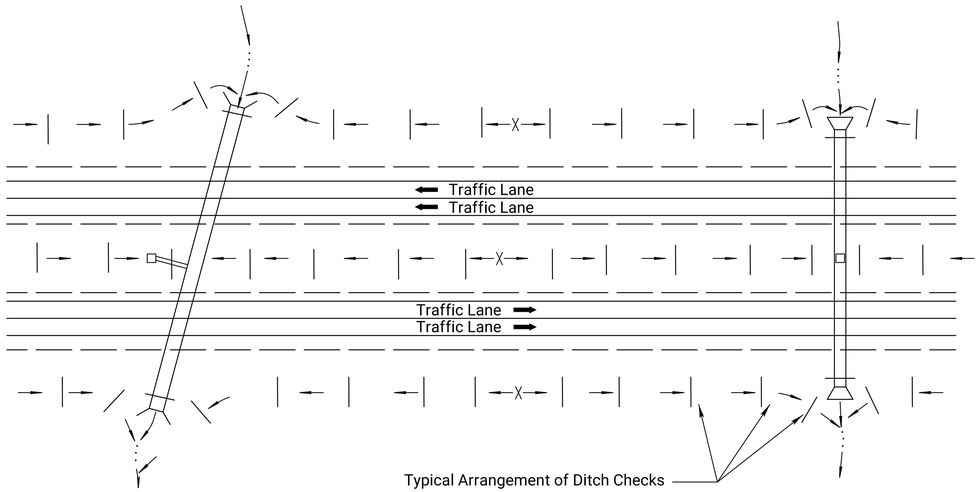

Typical Arrangement of Ditch Checks

TYPICAL DITCH CHECK LAYOUT PLAN

NO SCALE

20" BIOLOG CHECK SPACING	
DITCH ℄ SLOPE (%)	SPACING INTERVAL (FEET)
1.0	125
2.0	60
3.0	40
4.0	30
5.0	25
NOTE: Use this spacing for all except Rock Ditch Checks.	

18" FILTER SOCK CHECK SPACING	
DITCH ℄ SLOPE (%)	SPACING INTERVAL (FEET)
1.0	110
2.0	55
3.0	35
4.0	25
5.0	20
NOTE: Use this spacing for all except Rock Ditch Checks.	

GENERAL NOTES

1) The choice of ditch check methods is at the option of the Contractor.

2) Use only rock checks in situations where the ditch slope is 6 percent or greater.

2) Ditch checks damaged by Contractor's negligence, including improper maintenance or lack of maintenance, shall be repaired by Contractor at no extra cost to KDOT.

NO.	DATE	REVISIONS	BY	APP'D
03	08-10-16	Revised Standard	R.A.A.	S.H.S.
02	06-28-16	Revised Standard	R.A.A.	S.H.S.
01	06-01-13	Revised Standard	M.R.M.	S.H.S.

KANSAS DEPARTMENT OF TRANSPORTATION

TEMPORARY EROSION AND POLLUTION CONTROL DITCH CHECKS

LA852E

FHWA APPROVAL			09-14-16	APP'D.		Scott H. Shields	
DESIGNED	S.H.S.	DETAILED	R.A.A.	QUANTITIES		TRACED	R.A.A.
DESIGN CK.	S.H.S.	DETAIL CK.	S.H.S.	QUAN.CK.		TRACE CK.	S.H.S.

KDOT Graphics Certified 06-18-2022

Sh. No. 23

KDOT Graphics Certified

Plotted by : Twhitson 23-FEB-2026 10:05
File : 023_c532701eec852e.dgn

STATE	PROJECT NO.	YEAR	SHEET NO.	TOTAL SHEETS
KANSAS	2 C-5327-01	2026	24	39

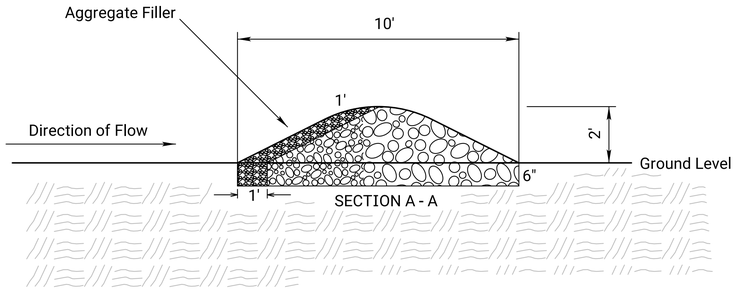

TYPICAL ELEVATION

ROCK DITCH CHECK

NO SCALE

TEMPORARY ROCK DITCH CHECK SPACING	
DITCH ℄ SLOPE (%)	SPACING INTERVAL (FEET)
5.0	60
6.0	50
7.0	43
8.0	36
9.0	33
10.0	29
NOTE: Use this spacing for Rock Ditch Checks only.	

ROCK DITCH CHECK NOTES

1. Rock shall be clean aggregate, D50-6" and aggregate filler.
2. Place rock in such manner that water will flow over, not around ditch check.
3. Do not use rock ditch checks in clear zone.
4. Excavation: The ditch area shall be reshaped to fill any eroded areas. Prior to placement of the rock, the ditch shall be excavated to the dimensions of the Rock Ditch Check and to a minimum depth of 6" (150mm). After placement of the rock, backfill and compact any over-excavated soil to ditch grade. This work shall be subsidiary to the bid item Temporary Ditch Check (Rock).
5. Aggregate excavated on site may be used as an alternate to the 6" rock, if approved by the Engineer.
6. The Engineer may approve the use of larger aggregates for the downstream portion of the check when conditions warrant their use.
7. When the use of larger rock is approved, D50-6" rock will be placed between the larger aggregate and the aggregate filler.
8. Aggregate filler will be placed on the upstream face of the ditch check. Aggregate filler will comply with Filter Course Type I, Division 1114.

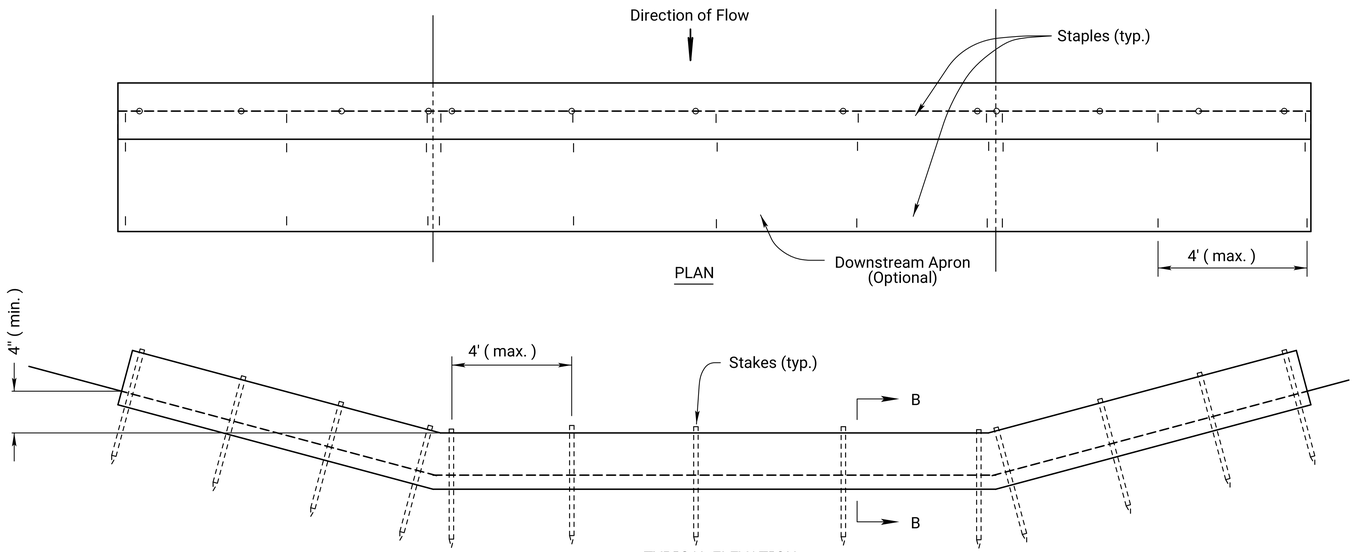

BIODEGRADABLE LOG DITCH CHECK

OR Filter Sock Ditch Check

NO SCALE

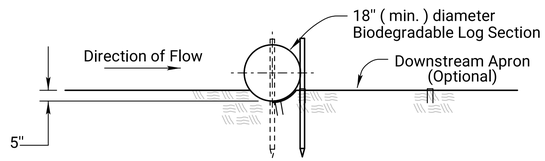

SECTION B - B

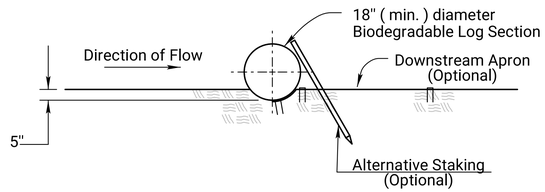

ALT. DETAIL
OPTIONAL

BIODEGRADABLE LOG DITCH CHECK NOTES

1. Use as many biodegradable log sections as necessary to ensure water does not flow around end of ditch check.
2. Overlap sections a minimum of 18".
3. Stakes shall be wood or steel according to Section 2114 of the Standard Specifications. Length of stakes shall be a minimum of 2 x the diameter of the log.
4. Use Erosion Control (Class 1) (Type C) as the downstream apron when required.
5. A downstream apron is required when directed by the Engineer. Apron material will be paid at the contract unit price.
6. Each log or sock (except compost filter socks) should be keyed into the ground at a minimum of 25% of its height. Compost filter socks should be placed on smooth prepared ground with no gaps between the sock and soil.

NO.	DATE	REVISIONS	BY	APP'D
03	11-19-20	Revised Standard	M.R.D.	M.L.
02	08-10-16	Revised Standard	R.A.A.	S.H.S.
01	10-21-15	Revised Standard	R.A.A.	S.H.S.

KANSAS DEPARTMENT OF TRANSPORTATION

TEMPORARY EROSION AND POLLUTION CONTROL ROCK DITCH CHECKS BIODEGRADABLE LOG DITCH CHECKS

LA852G

FHWA APPROVAL			11-19-20	APP'D.			Mervin Lare
DESIGNED	M.L.	DETAILED	D.K.	QUANTITIES		TRACED	R.A.A.
DESIGN CK.	M.L.	DETAIL CK.	M.L.	QUAN.CK.		TRACE CK.	R.A.A.

KDOT Graphics Certified 07-14-2022

Sh. No. 24

KDOT Graphics Certified

Plotted by : Twhitson 23-FEB-2026 10:05
File : 024_c532701eec852g.dgn

STATE	PROJECT NO.	YEAR	SHEET NO.	TOTAL SHEETS
KANSAS	2 C-5327-01	2026	25	39

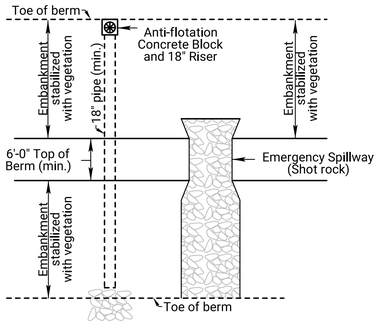

SEDIMENT STORAGE BASIN (PLAN)

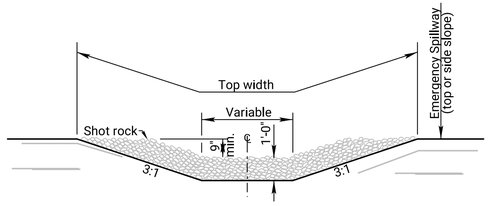

CROSS SECTION (EMERGENCY SPILLWAY)

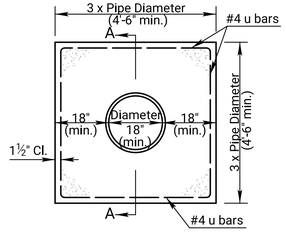

CONCRETE ANTI-SEEP COLLAR

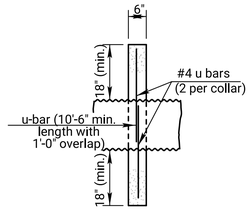

SECTION A-A

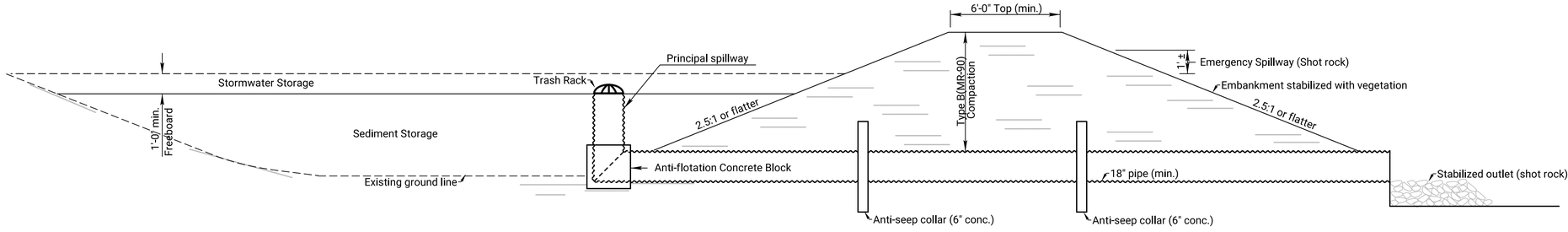

SEDIMENT STORAGE BASIN (ELEVATION)

NOTES:

1) Temporary Sediment Basins shall be constructed at locations as directed by the Engineer or as approved in the SWPPP Schedule. All work and materials necessary, including but not limited to, the fill material, compaction, drainage pipes, aggregates and all other incidentals necessary to construct the basin, shall be paid as "Temporary Sediment Basin".

2) Lengths and top dimensions shall be determined in the field by the Engineer.

3) Skimmer dewatering device required and must be used reguardless the size of the drainage area.

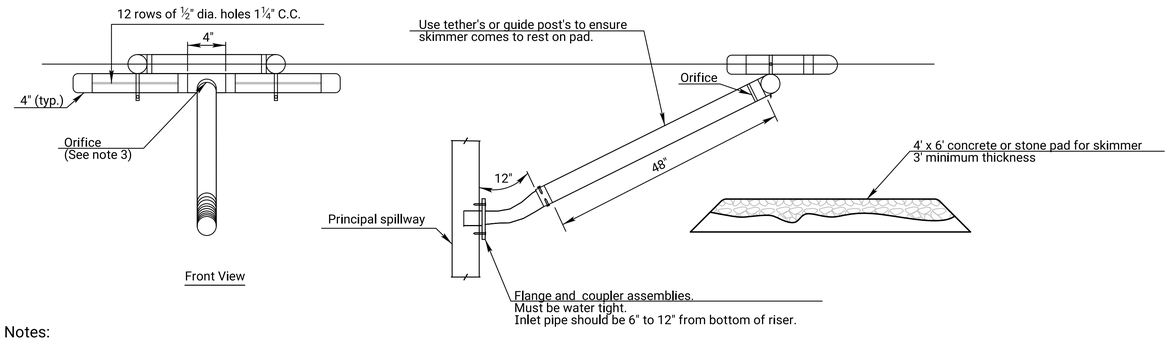

Notes:

1. All P.V.C. pipes are to be schedule 40.
2. HDPE flexible drain pipes is to be attached to the pond outlet structure with water-tight connections.
3. The orifice shall be sized of to provide drawdown time to 2 to 5 days and approved by the engineer.
4. Other skimmer designs maybe used that dewaters from the surface at a controlled rate. The design must be approved by the engineer.

SKIMMER DEWATERING DEVICE

SEDIMENT STORAGE BASIN LOCATIONS

STATION TO STATION	SIDE	REQUIRED STORAGE CAPACITY

NO.	DATE	REVISIONS	BY	APP'D
02	09-03-13	Added Skimmer Dewatering Device	M.R.M.	S.H.S.
01	07-17-13	Revised Standard	M.R.M.	S.H.S.

KANSAS DEPARTMENT OF TRANSPORTATION

TEMPORARY EROSION AND POLLUTION CONTROL SEDIMENT STORAGE BASIN

LA852H

FHWA APPROVAL		09-24-13	APP'D.		
DESIGNED	B.B.	DETAILED	B.B.	QUANTITIES	TRACED B.B.
DESIGN CK.	S.H.S.	DETAIL CK.	S.H.S.	QUAN.CK.	TRACE CK. S.H.S.

KDOT Graphics Certified 06-20-2022 Sh. No. 25

KDOT Graphics Certified

Plotted by : Twhitson 23-FEB-2026 10:05
File : 025_c532701eec852h.dgn

STATE	PROJECT NO.	YEAR	SHEET NO.	TOTAL SHEETS
KANSAS	2 C-5327-01	2026	26	39

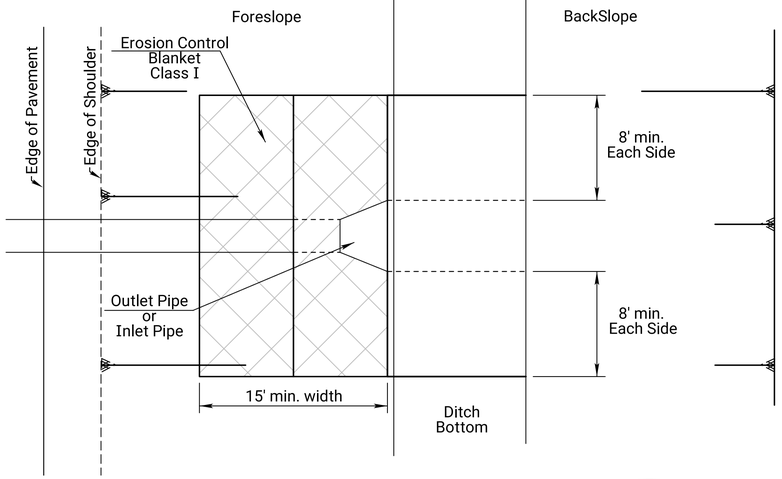

PARTIAL PLAN PIPE

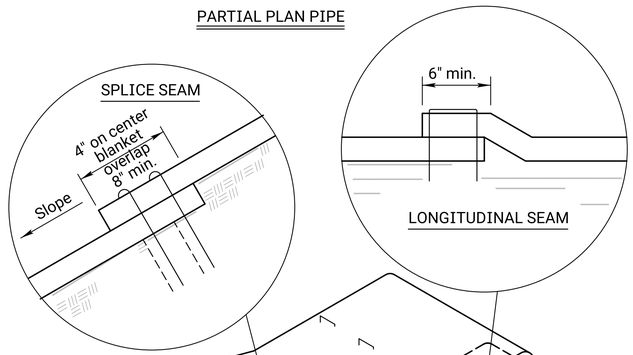

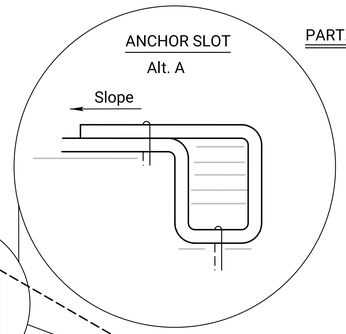

ISOMETRIC VIEW

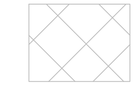

Limits of Erosion Control Blanket

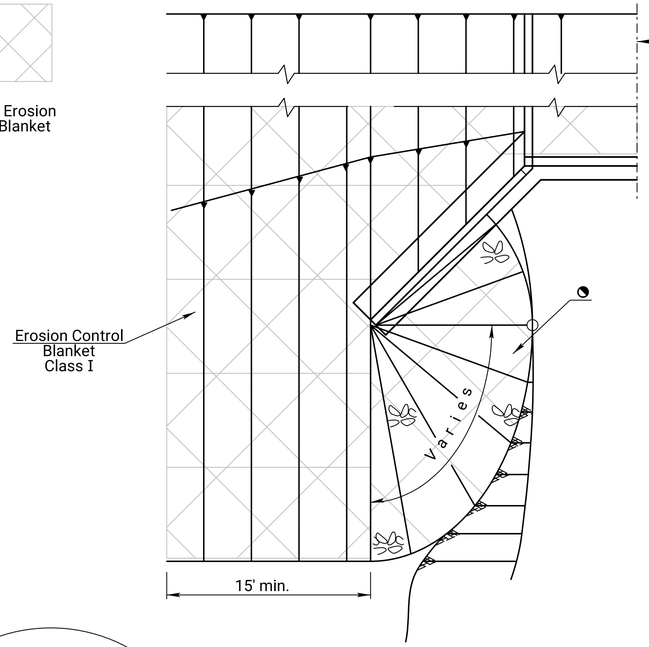

PARTIAL PLAN BOX CULVERT

◔ Erosion Control Class I may be omitted if the area is immediately covered by permanent slope protection (where directed by the plans).

INSTALLATION DETAILS FOR EROSION CONTROL CLASS 1

Erosion Control Blankets shall be laid loosely in the direction of the slope, beginning at the bottom of the slope. In order for blanket to be in contact with the soil, lay blanket loosely, avoiding stretching.

1. ANCHOR SLOTS: The top of the blanket should be "slotted in" at the top of the slope and anchored in place with anchors 6 inches apart. The slots should be 6 inches wide x 6 inches deep with the blanket anchored in the bottom of the slot, then backfilled, tamped and seeded.
2. LONGITUDINAL SEAMS: The edges of the blanket should overlap each other a minimum of 6 inches, with anchors catching the edges of both blankets.
3. SPLICE SEAM: When splices are necessary, overlap end a minimum of 8 inches in direction of water flow. Stagger splice seams.
4. TERMINAL FOLD: The bottom edge of the blanket shall be turned under a minimum of 4 inches, then anchored in place with anchors 9 inches apart.
5. TYPICAL ANCHORS: Anchor design shall be as recommended by the manufacturer.
6. STAPLE CHECK: ‡Establish Staples in 2 rows 4" on center apart. Staple Checks - shall be 30' apart.

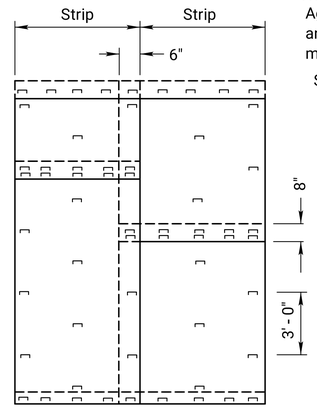

PLAN VIEW - ANCHORING DIAGRAM

NOTE:
Agricultural products, such as native prairie hay, used for mulching and erosion control practices, excluding wood based mulch, shall meet the North American Weed Free Forage Standards.

Single post ring and shank staple is acceptable.

NO.	DATE	REVISIONS	BY	APP'D
04	03-01-15	Revised Standard	R.A.A.	S.H.S.
03	02-23-15	Revised Standard	R.A.A.	S.H.S.
02	09-15-14	Revised Standard	M.R.M.	S.H.S.

KANSAS DEPARTMENT OF TRANSPORTATION

INSTALLATION DETAIL EROSION CONTROL CLASS 1 SLOPE PROTECTION

LA855

FHWA APPROVAL		03-10-15	APP'D.	Scott H. Shields			
DESIGNED	R.A.A.	DETAILED	R.A.A.	QUANTITIES		TRACED	R.A.A.
DESIGN CK.		DETAIL CK.		QUAN.CK.		TRACE CK.	R.A.A.

KDOT Graphics Certified 06-20-2022 Sh. No. 26

KDOT Graphics Certified

Plotted by : Twhitson 23-FEB-2026 10:05
File : 026_c532701eec855.dgn

STATE	PROJECT NO.	YEAR	SHEET NO.	TOTAL SHEETS
KANSAS	2 C-5327-01	2026	27	39

SUMMARY OF SEEDING QUANTITIES

P.L.S. RATE/ACRE	ACRES	BID ITEM	QUANTITY	UNIT
109.9	0.10	KDOT District One/Four Shoulder MIX	LUMP SUM	LS
37.5		KDOT District One/Four Other MIX		
10.3		Native Wildflower Mix 1		

District One/Four

District One/Four Shoulder Mix

P.L.S. RATE	Name	QTY (lb)
0.5	Blue Grama Grass Seed (Lovington)	
4.5	Buffalograss Seed (Treated)	
45	Perennial Ryegrass	
2.6	Prairie Junegrass	
6.3	Side Oats Grama Grass Seed (El Reno)	
45	Tall Fescue (Endophyte Free)	
6	Western Wheatgrass Seed (Barton)	
109.9	TOTAL (lb)	

District One/Four Other Mix

P.L.S. RATE	Name	QTY (lb)
2	Big Bluestem Grass Seed (Kaw)	
10	Canada Wildrye Grass Seed	
2	Indiangrass Seed (Osage)	
2	Little Bluestem Grass Seed (Aldous)	
6.3	Side Oats Grama Grass Seed (El Reno)	
10	Sterile Wheatgrass (Regreen/Quick Guard)	
0.7	Switchgrass Seed (Blackwell)	
0.5	Tall Dropseed	
4	Western Wheatgrass Seed (Barton)	
37.5	TOTAL (lb)	

District Two/Five

District Two/Five Shoulder Mix

P.L.S. RATE	Name	QTY (lb)
0.5	Blue Grama Grass Seed (Lovington)	
4.5	Buffalograss Seed (Treated)	
45	Perennial Ryegrass	
2.6	Prairie Junegrass	
7	Side Oats Grama Grass Seed (El Reno)	
45	Tall Fescue (Endophyte Free)	
6	Western Wheatgrass Seed (Barton)	
0.5	Sand Dropseed Grass Seed	
111.1	TOTAL (lb)	

District Two/Five Other Mix

P.L.S. RATE	Name	QTY (lb)
2	Big Bluestem Grass Seed (Kaw)	
10	Canada Wildrye Grass Seed	
2	Indiangrass Seed (Osage)	
2	Little Bluestem Grass Seed (Aldous)	
5.1	Sand Bluestem Seed	
0.5	Sand Dropseed Grass Seed	
2	Sand Lovegrass Seed	
7	Side Oats Grama Grass Seed (El Reno)	
10	Sterile Wheatgrass (Regreen/Quick Guard)	
1	Switchgrass Seed (Blackwell)	
0.5	Tall Dropseed Seed	
4	Western Wheatgrass Seed (Barton)	
46.1	TOTAL (lb)	

District Three/Six

District Three/Six Shoulder Mix

P.L.S. RATE	Name	QTY (lb)
1	Blue Grama Grass Seed (Lovington)	
24.5	Buffalograss Seed (Treated)	
1	Sand Dropseed Grass Seed	
6.3	Side Oats Grama Grass Seed (El Reno)	
10	Sterline Wheatgrass (Regreen/Quick Guard)	
6	Western Wheatgrass Seed (Barton)	
48.8	TOTAL (lb)	

District Three/Six Other Mix

P.L.S. RATE	Name	QTY (lb)
2	Big Bluestem Grass Seed (Kaw)	
1	Blue Grama Grass Seed (Lovington)	
8.8	Buffalograss Seed (Treated)	
2	Indiangrass Seed (Osage)	
2.5	Little Bluestem Grass Seed (Aldous)	
5.1	Sand Bluestem Grass Seed (Garden)	
1	Sand Dropseed Grass Seed	
6.3	Side Oats Grama Grass Seed (El Reno)	
10	Sterile Wheatgrass (Regreen/Quick Guard)	
1	Switchgrass Seed (Blackwell)	
4	Western Wheatgrass Seed (Barton)	
43.7	TOTAL (lb)	

GENERAL NOTES

The entire disturbed area, excepting the paved or surfaced areas, steep rocky slopes and areas of undisturbed native sod or other desirable vegetation shall be fertilized (limed when required), seeded and mulched. Soil preparation shall conform to the Standard Specifications except as noted below.

All borrow areas shown on the plans are to be fertilized, seeded, and mulched. However, operation in borrow areas where crops are growing may be omitted when requested by the owner.

If temporary cover has provided stable slopes with no erosion, seed the permanent grasses into the existing cover. If there has been erosion that requires repair prior to seeding, then it may be necessary to regrade the area, resulting in bare ground.

KDOT District Shoulder mix is typically placed 15 feet for 2-lane roads and 30 feet for 4-lane roads. Includes outside roadsides, turfed potions of shoulders, and turfed portion of the median.

KDOT District "Other" mix is designated as all other turf areas, except the Shoulder. Usually includes a Native Wildflower Mix.

NOTE: Projects less than 1 acre shall be bid as "Seeding" by the lump sum. All disturbed areas shall be seeded, fertilized and mulched at the listed rate per acre. The acres are estimated.

Refer to KDOT Standard Specificiations, Division 900, Section 905 "Seeding", and Section 907 "Sodding", for the seeding and sodding seasons.

*See LA852A for mulching quantity. The quantity of mulch is estimated (Acres of Seeding x 1.5 x 2 tons/acre). The total mulch required shall be determined in the field. The bid item for mulching shall be paid for according to the KDOT Standard Specifications.

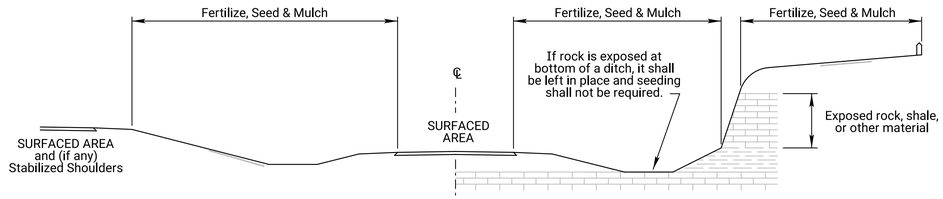

CUT SECTION

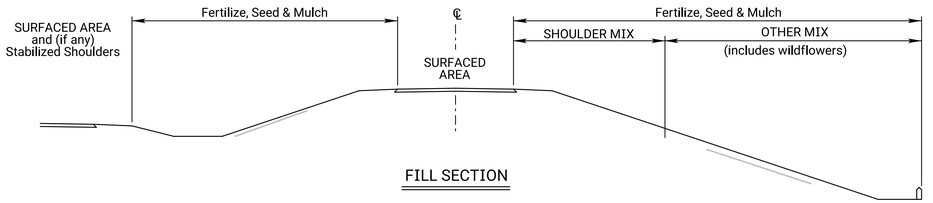

FILL SECTION

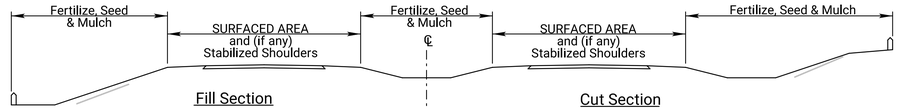

TYPICAL SECTION - DUAL PAVEMENT

NATIVE WILDFLOWER MIX 1

PLS RATE	NAME	QTY (lb)
0.3	Butterfly Milkweed	
0.3	Common Milkweed	
0.3	Black Eyed Susan	
0.5	Blanket Flower	
0.5	False Sunflower	
0.5	Lance-Leaf Coreopsis	
0.2	Maximilian Sunflower	
0.1	New England Aster	
0.2	Pinnate Prairie Coneflower	
0.2	Plains Coreopsis	
0.6	Purple Coneflower	
0.3	Upright Prairie Coneflower	
0.3	Lemon Mint	
0.2	Pitcher Sage	
0.2	Wild Bergamot	
1.0	Illinois Bundleflower	
0.2	Common Evening Primrose	
0.1	Hoary Verbena	
0.8	Purple Prairie Clover	
0.3	Roundhead Lespedeza	
3.0	Showy Partridge Pea	
0.2	White Prairie Clover	
10.3	Total (lb)	

NATIVE WILDFLOWER MIX 2

PLS RATE	NAME	QTY (lb)
0.3	Butterfly Milkweed	
0.3	Black Eyed Susan	
0.5	Black Sampson Coneflower	
1.0	Blanket Flower	
0.2	Maximilian Sunflower	
0.2	Plains Coreopsis	
0.2	Upright Prairie Coneflower	
0.2	Western Yarrow	
0.3	Lemon Mint	
0.4	Pitcher Sage	
1.5	Illinois Bundleflower	
0.2	Common Evening Primrose	
1.0	Blue Wild Indigo	
0.4	Leadplant	
0.4	Purple Prairie Clover	
0.3	White Prairie Clover	
7.4	Total (lb)	

Package and deliver the wildflower seed separately from the grass seed mix. Package and deliver the Tall Drop Seed separately from the grass seed and the wildflower mix. Place the grass seed (except Tall Drop Seed) in the large seed box and drill (cover) seed ⅛" -¼". Place the wildflower seed in a separate seed box and drill (cover) seed 1/16" maximum. Place the Tall Drop Seed in a separate (third) seed box and place the seed (using the seed drill) on the soil surface.
OPTION: Broadcast Tall Drop Seed on the soil surface.

GRASS & WILDFLOWER SEEDING SEASONS

COOL SEASON GRASSES	WARM SEASON GRASSES & WILDFLOWERS
February 15 thru April 20 August 15 thru September 30	November 15 thru June 1
SPECIES	SPECIES
Bluegrasses	Bermuda Grass
Brome Grasses	Big Bluestem
Canada Wildrye	Blue Grama
Fescues	Buffalo Grass
Prairie Junegrass	Indiangrass
Ryegrasses	Little Bluestem
Sterile Wheatgrass	Sand Bluestem
Tall Dropseed	Sand Dropseed
Western Wheatgrass	Sand Lovegrass
	Side Oats Grama
	Switchgrass
	Wildflower Mixes

When the area to be seeded is 1 acre or more, if Cool Season grasses are mixed with Warm Season grasses, seed the area during the Warm Season.

When the area to be seeded is less than 1 acre, seed the area any time of the year.

SODDING SEASONS

COOL SEASON GRASSES	WARM SEASON GRASSES
March 1 thru April 15 September 1 thru November 15	May 15 thru September 1
SPECIES	SPECIES
Bluegrass Sod	Buffalo Grass Sod
Fescue Sod	

If the soil is workable, the Engineer may allow placement of sod between November 15 and March 1. If sod is placed during this time, maintain the sod until 20 days after the beginning of the spring sodding season.

NO.	DATE	REVISIONS	BY	APP'D
03	09-12-24	Addition of tables for District Seed Mix	M.E.C.	M.L.
02	11-25-20	Updated Seeding / Sodding Periods Charts	M.R.D.	M.L.
01	08-03-20	Revised Standard	M.R.D.	S.H.S.

KANSAS DEPARTMENT OF TRANSPORTATION

PERMANENT SEEDING
SUMMARY OF SEEDING QUANTITIES

LA850

FHWA APPROVAL		03-27-25	APP'D.	Mervin Lare
DESIGNED	DETAILED		QUANTITIES	TRACED
DESIGN CK.	DETAIL CK.		QUAN.CK.	TRACE CK.

CADconform Certify This File

Sh. No. 27

Plotted by : Twhitson 23-FEB-2026 10:05
File : 027_c532701eps850.dgn

1) Design Speed: Those items delegated to temporary traffic control should be designed and installed using the posted/legal speed of the roadway prior to work starting.

2) Minimum Lane Width: Lane widths shall be a minimum of 11' (measured between centerlines of pavement markings) or as shown on the plans, or as directed by the engineer. A lane width less than 11' may require restricted roadway width signing.

3) Consideration should be made to separate pedestrian and, if needed, bicycle movements from both work site activity and vehicular traffic. Unless a reasonable safe route that does not involve crossing the roadway can be provided, pedestrians should be appropriately directed with advance signing that encourages them to cross to the opposite side of the roadway. In urban and suburban areas with high vehicular traffic volumes, these signs should be placed at intersections (rather than midblock locations) so that pedestrians are not confronted with midblock work sites that will induce them to attempt skirting the work site or making a midblock crossing.

4) When existing pedestrian facilities are disrupted, closed, or relocated, the temporary facilities shall be detectable and include accessibility features consistent with the features present in the existing pedestrian facility.

5) When the driving surface open to traffic is milled or is a temporary surface made of loose material, or when directed by the engineer a W8-15 (Grooved Pavement) or W8-7 (Loose Gravel) sign shall be used on mainline approaches. This sign should be placed a "C" distance after the W20-1 (Road Work Ahead) sign. A W8-15p motorcycle plaque shall be used to supplement the W8-15 or W8-7 signs. All signs shall be displayed as long as the condition is present.

6) Alternative temporary rumble strip options may be available. Please contact the Temporary Traffic Control Unit for more information at 785-296-1179 or 785-296-1183.

STATE	PROJECT NO.	YEAR	SHEET NO.	TOTAL SHEETS
KANSAS	2 C-5327-01	2026	28	39

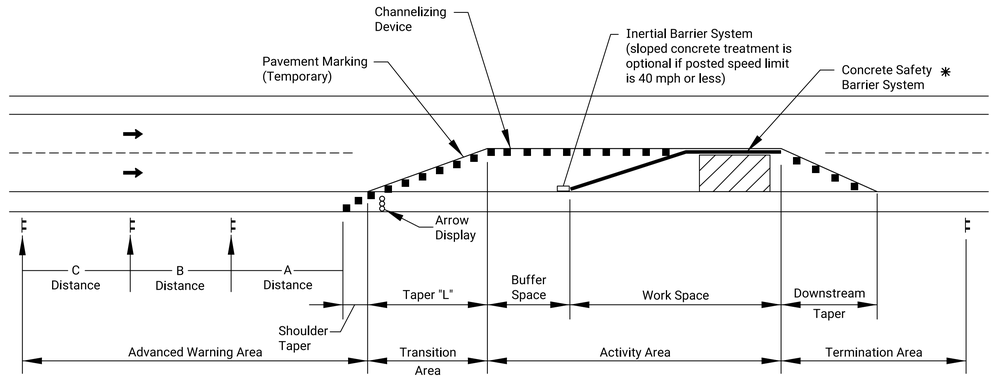

TYPICAL WORK ZONE COMPONENTS

✳ When concrete barrier system is used, portable channelizing devices are not needed along the tangent barrier section.

Minimum advance warning sign spacing (in feet):

SPEED (MPH) ✳	*A*	*B*	*C*
URBAN (40 MPH OR LOWER)	*100*	*100*	*100*
URBAN (45 MPH OR HIGHER)	*350*	*350*	*350*
RURAL (55 MPH OR LOWER)	*500*	*500*	*500*
RURAL (60 MPH OR HIGHER)	*750*	*750*	*750*
EXPRESSWAY/FREEWAY	*1000*	*1500*	*2640*

✳ Posted speed prior to work starting

The minimum spacing between signs shall be no less than 100', unless directed by the engineer.

The spacing between any signs may be increased beyond the minimum values in the table above as approved by the engineer in order to maximize visibility.

Taper Formulas:

L = WS for speeds of 45 MPH or more

$L = WS^2/60$ for speeds of 40 MPH or less

Where: L = Minimum length of taper in feet
S = Numericial value of posted speed prior to work starting in MPH
W = Width in offset feet

Shifting Taper=1/2 L
Shoulder Taper=1/3 L

Channelizer Placement:

(1) The spacing between devices in transition area (taper) should not exceed a distance in feet equal to 1/2 the posted speed limit in mph prior to work starting.

(2) The spacing between devices in the advanced warning area and the activity area should not exceed a distance in feet equal to two times the posted speed limit in mph prior to work starting.

(3) Channelizing devices shall be placed for optimum visibility, normally at right angles to the traffic flow.

(4) Place directional indicator barricades in series to direct traffic onto the new path. The arrow sign should not be visible to opposing traffic.

(5) Alternating diagonal orange and white striping must slope downward in the direction traffic is expected to pass.

Buffer Space

SPEED (MPH) ✳	*20*	*25*	*30*	*35*	*40*	*45*	*50*	*55*	*60*	*65*	*70*	*75*
LENGTH (ft)	*115*	*155*	*200*	*250*	*305*	*360*	*425*	*495*	*570*	*645*	*730*	*820*

✳ Posted speed prior to work starting

Neither work activity nor storage of equipment, vehicles, or material should occur in the buffer space. When a protection vehicle is placed in advance of the work space, only the space upstream of the vehicle constitutes the buffer space.

If temporary concrete safety barrier system is used to separate approaching traffic from the work space, the barrier system shall be considered part of the activity area. A full lane width should be available throughout the length of the buffer space. See typical work zone components above.

NO.	DATE	REVISIONS	BY	APP'D
02	03-13-18	W8-15p usage changed to Shall	R.W.B.	E.K.G.
01	08-18-15	Channelizer spacing info	R.W.B.	K.E.

KANSAS DEPARTMENT OF TRANSPORTATION

TRAFFIC CONTROL GENERAL NOTES

TE700

FHWA APPROVAL			03-13-18	APP'D.	Eric Kocher
DESIGNED	B.A.H.	DETAILED	R.W.B.	QUANTITIES	TRACED
DESIGN CK.		DETAIL CK.		QUAN.CK.	TRACE CK.

KDOT Graphics Certified 07-18-2022 Sh. No. 28

KDOT Graphics Certified

Plotted by : Twhitson 23-FEB-2026 10:05
File : 028_c5327701ccs700.dgn

STATE	PROJECT NO.	YEAR	SHEET NO.	TOTAL SHEETS
KANSAS	2 C-5327-01	2026	29	39

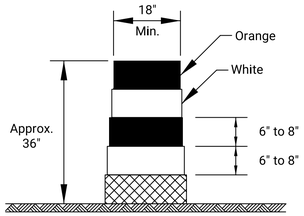

DRUM

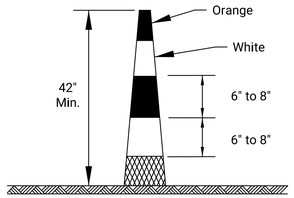

CONICAL
DELINEATOR

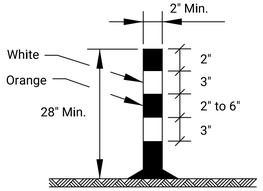

TUBULAR MARKER

Striping as shown for up to 42".

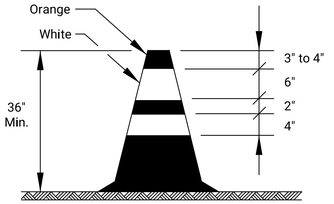

TRAFFIC CONE

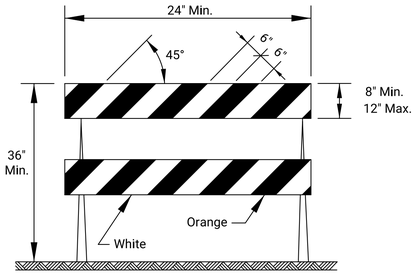

TYPE 2 BARRICADE

For rails less than 36" long, 4" wide stripes may be used. All stripes shall slope downward to the traffic side for channelization.

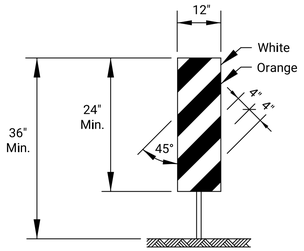

VERTICAL PANEL

The stripes shall slope downward to the traffic side for channelization.

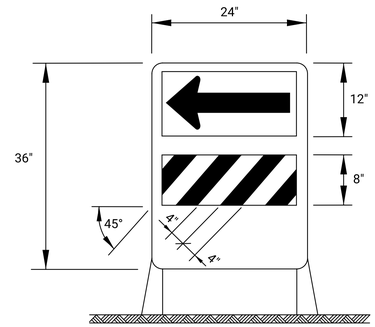

DIRECTION INDICATOR BARRICADE

The stripes shall slope downward in the direction traffic is to pass. The direction indicator barricade shall be used in series to direct the motorist into the intended lane of travel.

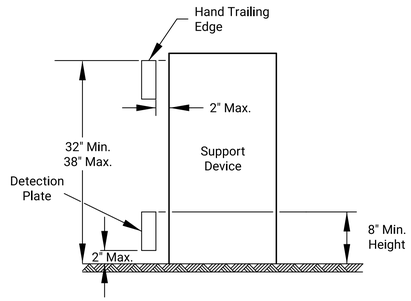

PEDESTRIAN CHANNELIZER

1. Support device shall not project beyond the detection plate into the pathway.
2. Hand trailing edges and detection plates are optional for continuous walls.
3. Interconnect pedestrian channelizers to prevent displacement and to provide continuous guidance through or around work.
4. Alternate pathways shall be firm, stable, and slip resistant.
5. Treat height differentials > 1/2" in the surfaces of alternate paths with a firm, stable, and slip resistant temporary ramp having a slope of 12:1 or flatter and having a width equal to the alternate path.
6. Use alternating orange/white on interconnected devices.

Item	Location	Cross-overs	Shoofly Diversions	Tangents	Tapers	Ramps	Head to Head	Object Identifier	Lead-in Devices	Gores
Portable										
	Drums	Yes	Yes	Yes	Yes	Yes	(1)	Yes	Yes	Yes
	Conical Delineators	Yes	Yes	Yes	Yes	Yes	(1)	Yes	Yes	Yes
	Vertical Panels	(2)	(2)	(2)	(2)	(2)	(1,2)	Yes	(2)	(2)
	Direction Indicator Barricade	No	No	No	Yes	No	No	No	No	No
	Type 2 Barricade	(2)	(2)	(2)	(2)	No	No	Yes	No	No
	Traffic Cones	No	No	(4)	(4)	(4)	No	(4)	(4)	(4)
Fixed										
	Tubular Markers	(3)	(3)	(3)	No	(3)	Yes	No	Yes	Yes
	Vertical Panels	(3)	(3)	(3)	(3)	(3)	(3)	Yes	(2,3)	(2)

(1) Not allowed on centerline delineation along freeways or expressways.
(2) The stripes shall slope downward to the traffic side for channelization.
(3) May be used upon the approval of the engineer.
(4) Daytime operations only.

NO.	DATE	REVISIONS	BY	APP'D

KANSAS DEPARTMENT OF TRANSPORTATION

TRAFFIC CONTROL CHANNELIZING DEVICES

TE702

FHWA APPROVAL	06-01-15	APP'D.	Kristina Ericksen		
DESIGNED L.E.R.	DETAILED R.W.B.	QUANTITIES	TRACED		
DESIGN CK.	DETAIL CK.	QUAN.CK.	TRACE CK.		

KDOT Graphics Certified 07-18-2022 Sh. No. 29

KDOT Graphics Certified

Plotted by : Twhitson 23-FEB-2026 10:05
File : 029_c532701ccs702.dgn

STATE	PROJECT NO.	YEAR	SHEET NO.	TOTAL SHEETS
KANSAS	2 C-5327-01	2026	30	39

Note: Signs shown for one approach to work zone.

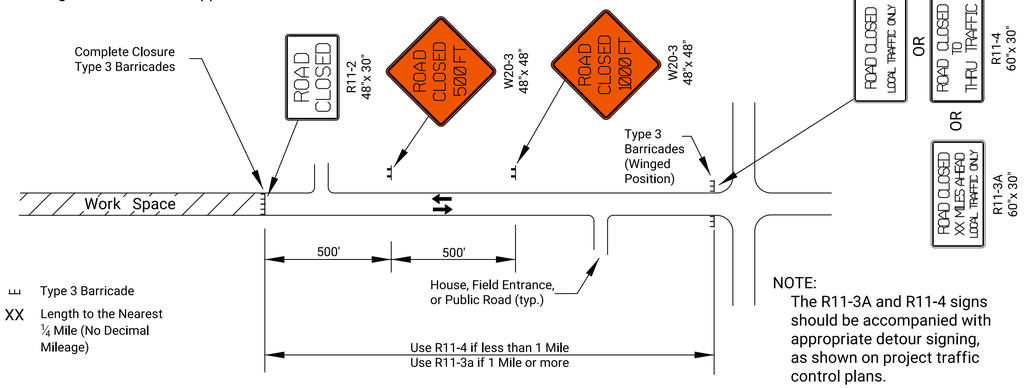

NOTE:
The R11-3A and R11-4 signs should be accompanied with appropriate detour signing, as shown on project traffic control plans.

FIGURE 1: TYPICAL SIGNING FOR ROAD CLOSURE (MAINLINE OR SIDE ROAD)

Note: Sign shown for one approach to intersection (work zone).

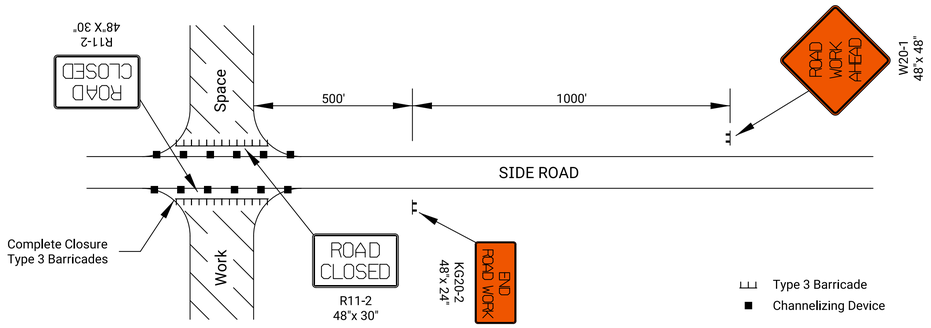

FIGURE 2: TYPICAL SIGNING FOR SIDE ROAD OPEN

Note: Signs shown for one approach to work zone.

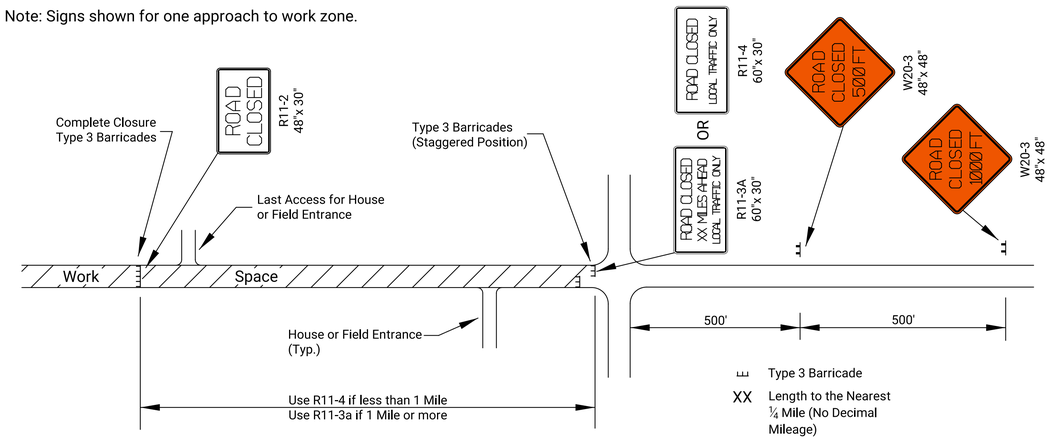

FIGURE 3: TYPICAL SIGNING FOR ROAD CLOSURE - LOCAL TRAFFIC ACCESS

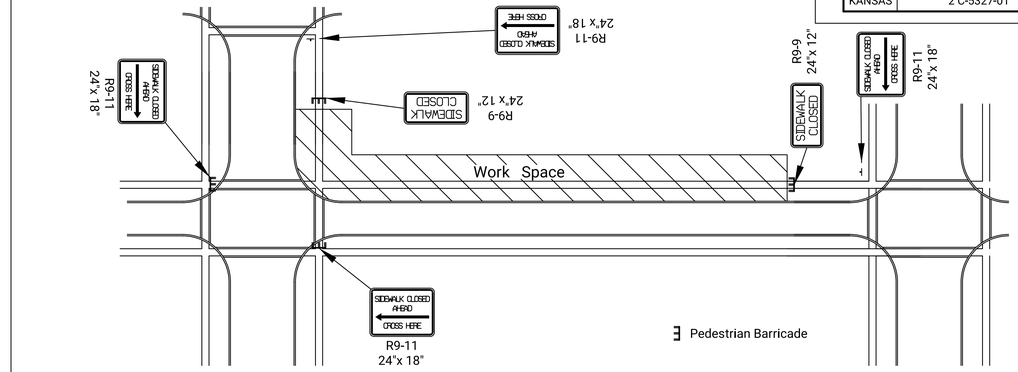

FIGURE 4: TYPICAL SIGNING FOR SIDEWALK CLOSED WITH OPPOSITE SIDEWALK AVAILABLE

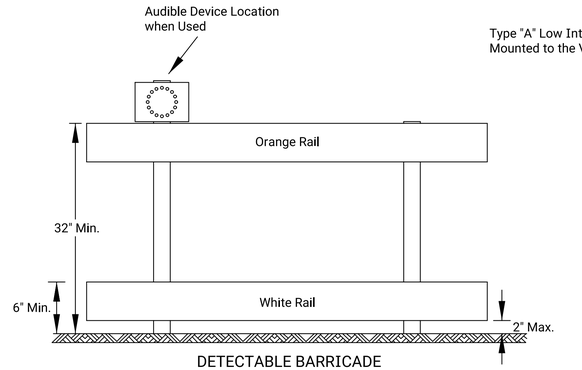

DETECTABLE BARRICADE

1. Support device shall not project beyond the detection plate into the pathway.
2. Barricades shall be used to close the entire width of the pathway.
3. Do not use warning lights on pedestrian barricades.
4. Do not use warning lights on audible devices.

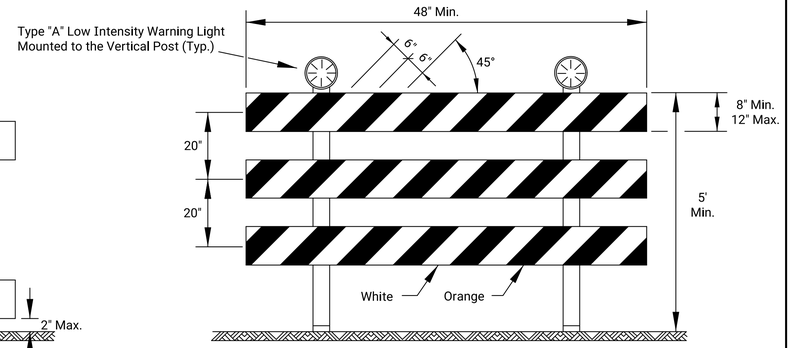

TYPE 3 BARRICADE WITH LIGHTS

Approved signs mounted on Type 3 barricades should not cover more than 50% of the top two rails or 33% of the total area of the three rails.

When barricades are placed end-to-end or staggered, a Type "A" low intensity warning light shall be mounted to the vertical post near each outside corner of the end barricades.

ROAD CLOSED GENERAL NOTES

As shown in Figure 1, at the point where thru traffic must detour and local traffic can proceed to the location where the roadway is completely closed, the R11-3a (ROAD CLOSED # MILES AHEAD LOCAL TRAFFIC ONLY) or R11-4 (ROAD CLOSED LOCAL TRAFFIC ONLY or ROAD CLOSED TO THRU TRAFFIC) sign shall be used with Type 3 barricades (winged position), placed on the shoulders of roadway.

As shown in Figure 3, when local traffic must be allowed access into the work zone, Type 3 barricades shall be longitudinally staggered to maintain the appearance of a closed roadway. A second line of end-to-end Type 3 barricades shall be placed just beyond the last access point in the work zone, to completely close the roadway.

The R11-4 (ROAD CLOSED TO THRU TRAFFIC or ROAD CLOSED LOCAL TRAFFIC ONLY) sign shall be used when the distance to the point of complete closure of the roadway is less than 1 mile.

The R11-3a (ROAD CLOSED # MILES AHEAD LOCAL TRAFFIC ONLY) sign shall be used when the distance to the point of complete closure of the roadway is 1 mile or greater.

The words "BRIDGE OUT" (or BRIDGE CLOSED) may be substituted for the words "ROAD CLOSED" on the R11-3a or R11-4 sign where applicable.

NO.	DATE	REVISIONS	BY	APP'D

KANSAS DEPARTMENT OF TRANSPORTATION

TRAFFIC CONTROL CLOSURES

TE704

FHWA APPROVAL			06-01-15	APP'D.		Kristina Ericksen	
DESIGNED	B.A.H.	DETAILED	R.W.B.	QUANTITIES		TRACED	
DESIGN CK.		DETAIL CK.		QUAN.CK.		TRACE CK.	

KDOT Graphics Certified 07-18-2022 Sh. No. 30

KDOT Graphics Certified

Plotted by : Twhitson 23-FEB-2026 10:05
File : 030_c532701ccs704.dgn

SIGN LAYOUT INFORMATION



KG20-2

Std. Size Expwy/Freeway
6" C
48"x 24"



KG20-5

Std. Size Expwy/Freeway
6" C
48"x 24"



KM4-20

Std. Size
3" C
24"x 6"

Expwy/Freeway
6" C
48"x 12"



W7-3a

Mileage to be Determined by the Engineer.



W8-15

Std. Size Expwy/Freeway
8" D
48"x 48"



W8-7

Std. Size Expwy/Freeway
8" D
48"x 48"



W8-15p

Std. Size Expwy/Freeway
30"x 24"



W8-17

Std. Size Expwy/Freeway
48"x 48"



W8-11

Std. Size Expwy/Freeway
8" D
48"x 48"



W8-17P
(Optional)

Std. Size Expwy/Freeway
30"x 24"



SP-01
(Special Sign)

Std. Size
6" C

Expwy/Freeway
10" D



SP-02
(Special Sign)

Std. Size		Expwy/Freeway	
Uppercase:	6" C	Uppercase:	10" D
Lowercase:	4.5" C	Lowercase:	8" D

All city names and street names on special signs and destination signs must have upper and lower case letters.

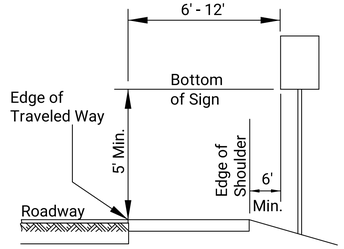

RURAL

1) Ground-mounted signs shall be mounted at a minimum height of 5' measured from the bottom of sign to the near edge of the pavement.

2) Large signs having an area exceeding 50 square feet installed on multiple breakaway posts shall be mounted a minimum of 7' above the ground.

3) The height of the secondary sign mounted below another sign may be 4' measured from the bottom of the sign to the near edge of the pavement. Signs shall not overlap each other.

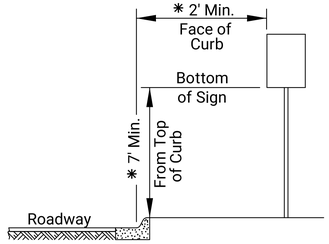

URBAN

1) Signs shall be mounted at a minimum height of 7' measured from the bottom of sign to the near edge of the pavement.

2) Neither portable nor permanent sign supports should be located on sidewalks or areas designated for pedestrian or bicycle traffic.

3) Signs mounted lower than 7' should not project more than 4" into pedestrian facilities.

4) The height from of the secondary sign mounted below another sign may be 6' measured from the bottom of sign to the near edge of the pavement. Signs shall not overlap each other.

5) Large signs having an area exceeding 50 square feet installed on multiple breakaway posts shall be mounted a minimum of 7' above the ground.

* 6) Pedestrian detour signing shall be a minimum of 2' measured from the top of the pedestrian pathway to the bottom of the sign and shall not protrude into the walkway nor shall it project beyond the back of curb.

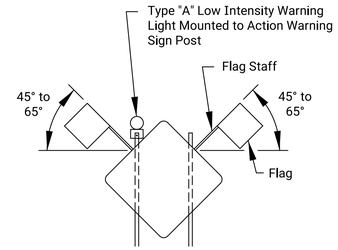

When the sign width is equal to or greater than 9', three or more wood posts may be used with a minimum of 4' between the centerline of each post. All signs less than 9' in width shall use a maximum of two wood posts.

In the case of hitting rock when driving posts
1. Shift the sign location. Do not violate minimum sign spacing.
2. With the engineer's approval, use acceptable alternative sign stands.

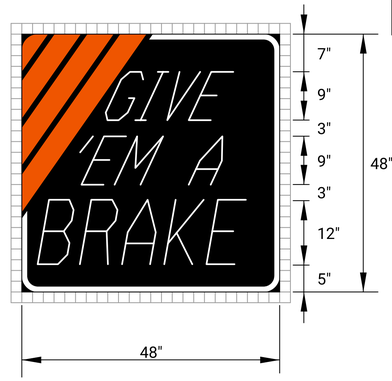

KI-104a

Sign Number	GIVE EM A BRAKE
Width x Height	4'-0" x 4'-0"
Border Width	1.0"
Corner Radius	4.0"
Stripe Width	3.0"
Mounting	Ground
Background	Type: Non-Reflective
	Color: Black
Legend/Border	Type: Reflective
	Color: White
Legend Font	Dutch 801 Roman SWC 25 Degree Slant
Stripes	Type: Reflective
	Color: Orange

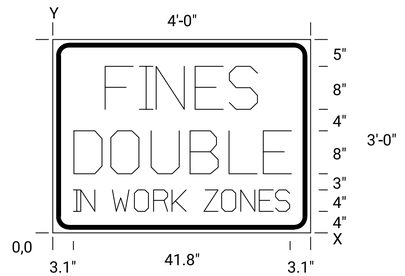

KI-105a

Sign Number	FINES DOUBLE
Width x Height	4'-0" x 3'-0"
Border Width	0.9"
Corner Radius	3.0"
Mounting	Ground
Background	Type: Reflective
	Color: White
Legend/Border	Type: Non-Reflective
	Color: Black

Dimensions in inches — Spacings are to start of next letter

Y FONT	LETTER SPACINGS															HT LEN
23.0 D	X	F	I	N	E	S	X									8.0
	9.7	6.4	3.2	7.3	6.4	5.4	9.7									28.6
11.0 D	X	D	O	U	B	L	E	X								8.0
	3.9	6.9	7.5	7.3	7.3	6.4	4.9	3.9								40.3
4.0 D	X	I	N	X	W	O	R	K	X	Z	O	N	E	S	X	4.0
	3.1	1.6	2.7	3.2	4.3	3.8	3.6	2.8	3.2	3.4	3.8	3.6	3.2	2.7	3.1	41.8

Notes:

Typically, there are two sets of informational signs installed per project: one for each direction of traffic.

Install signs a minimum of 500' in advance of the road work ahead sign. The engineer may designate a more appropriate location if conditions dictate.

The informational signs are not to interfere with the traffic control signs for the project.

STATE	PROJECT NO.	YEAR	SHEET NO.	TOTAL SHEETS
KANSAS	2 C-5327-01	2026	31	39

NO.	DATE	REVISIONS	BY	APP'D

KANSAS DEPARTMENT OF TRANSPORTATION

TRAFFIC CONTROL SIGN INFORMATION

TE710

FHWA APPROVAL		06-01-15	APP'D.	Kristina Ericksen	
DESIGNED	R.W.B.	DETAILED R.W.B.	QUANTITIES	TRACED	
DESIGN CK.		DETAIL CK.	QUAN.CK.	TRACE CK.	

KDOT Graphics Certified 12-16-2022 Sh. No. 31

KDOT Graphics Certified

Plotted by : Twhitson 23-FEB-2026 10:05
File : 031_c5327701ccs710.dgn

STATE	PROJECT NO.	YEAR	SHEET NO.	TOTAL SHEETS
KANSAS	2 C-5327-01	2026	32	39

PERFORATED SQUARE STEEL TUBE (P.S.S.T.) POST SETUP

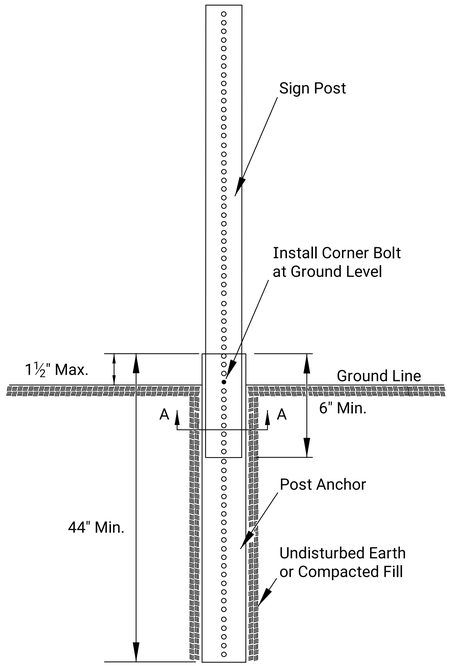

P.S.S.T. Detail

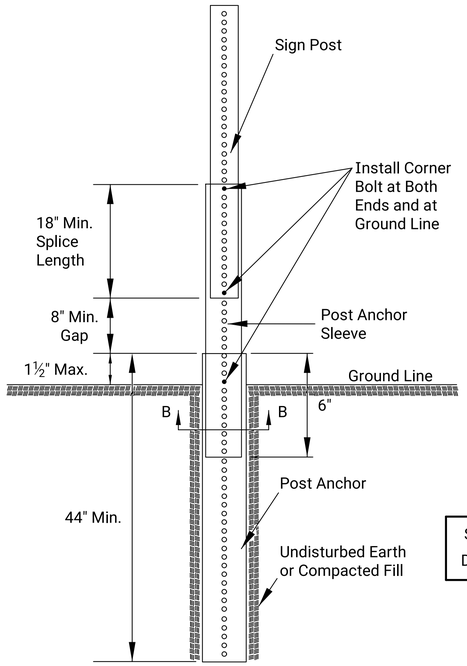

Telescoping P.S.S.T. Detail

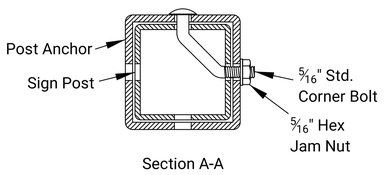

Section A-A

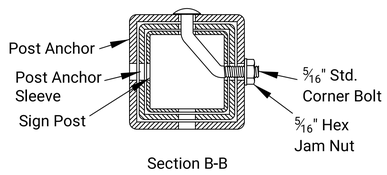

Section B-B

Details for 2", 2 ¼", or 2 ½" sign posts

Place bolts in the same corner along each sign post.

WOOD POST SETUP

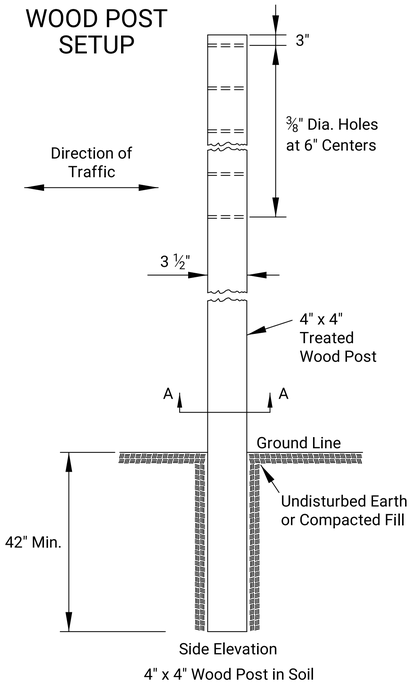

Side Elevation
4" x 4" Wood Post in Soil

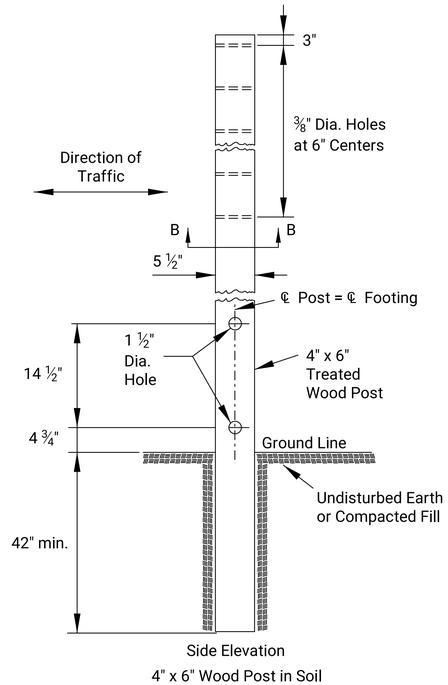

Side Elevation
4" x 6" Wood Post in Soil

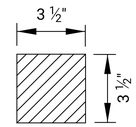

Section A-A

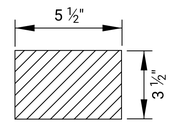

Section B-B

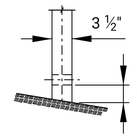

Front Elevation

See TE710 for Additional Details and Requirements

3 LB/F U-CHANNEL SETUP

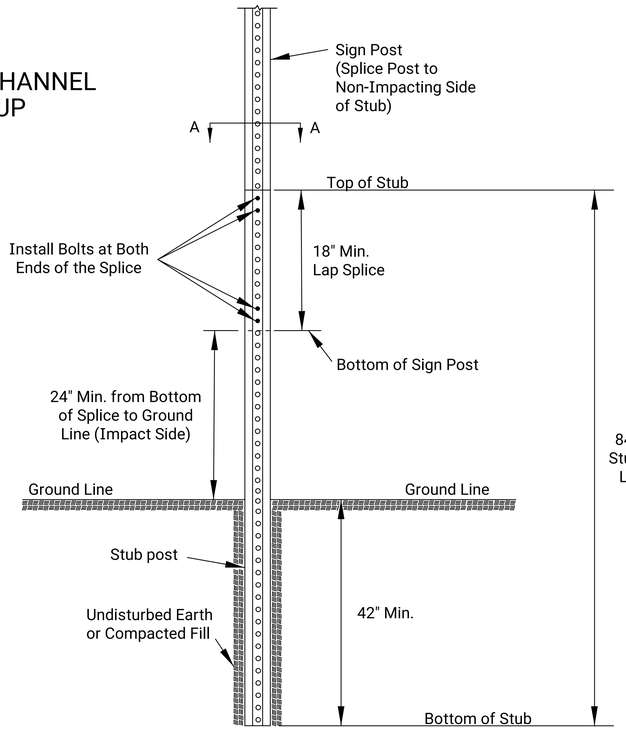

Notes:

Place two bolts at both ends of the splice through the holes nearest the ends of the splice.

Use manufacturer recommended spacers over the bolts between the spliced pieces of U-Channel.

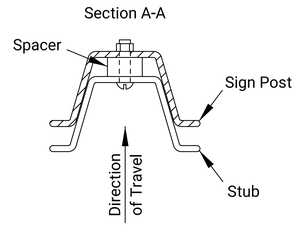

NO.	DATE	REVISIONS	BY	APP'D

KANSAS DEPARTMENT OF TRANSPORTATION

TRAFFIC CONTROL SIGN POSTS

TE712

FHWA APPROVAL		06-01-15	APP'D.	Kristina Ericksen	
DESIGNED	B.A.H.	DETAILED R.W.B.	QUANTITIES	TRACED	
DESIGN CK.		DETAIL CK.	QUAN.CK.	TRACE CK.	

KDOT Graphics Certified 07-18-2022 Sh. No. 32

KDOT Graphics Certified

Plotted by : Twhitson 23-FEB-2026 10:05
File : 032_c532701ccs712.dgn

STATE	PROJECT NO.	YEAR	SHEET NO.	TOTAL SHEETS
KANSAS	2 C-5327-01	2026	33	39

SUMMARY OF TRAFFIC CONTROL DEVICES (EACH)

Work Zone Sign (Special)		
Sign No.	16.25 Sq.Ft. & Less	16.26 Sq.Ft. & Over

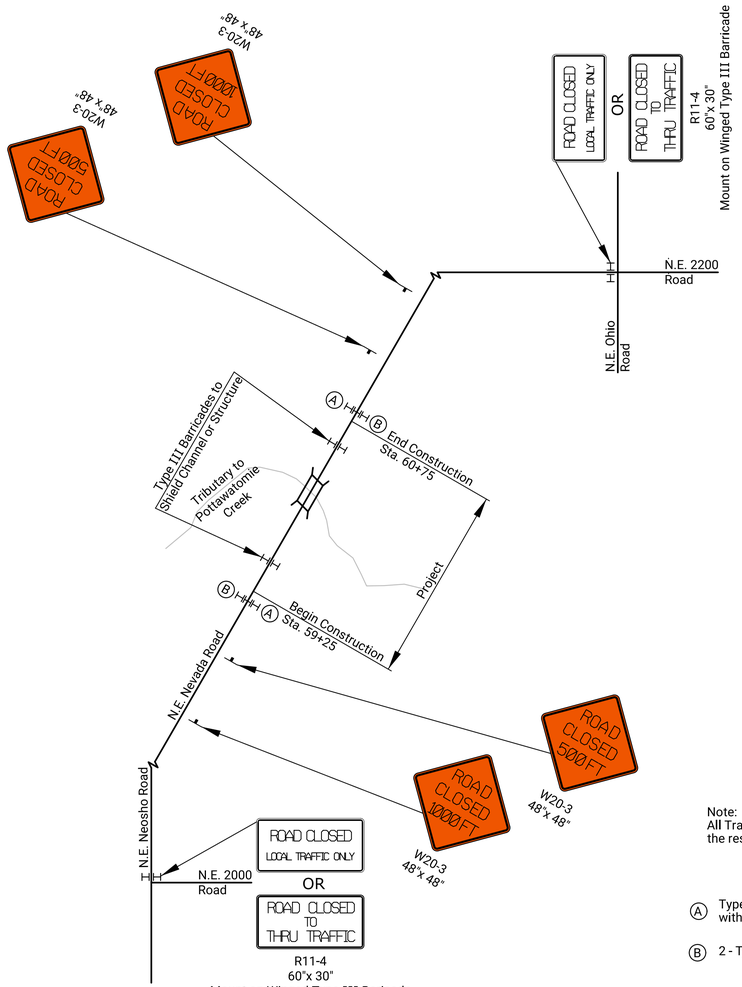

Not to Scale

Note:
All Traffic Control Signing shall be the responsibility of the Contractor.

Ⓐ Type III Barricades (8') with ROAD CLOSED Signs (R11-2)

Ⓑ 2 - Type III Barricades (8')

SUMMARY OF TRAFFIC CONTROL DEVICES (EACH PER DAY)

✳ Quantity most used on the project at any one time

Work Zone Signs ✳			
Sign No.	Size - Sq.Ft.		
	0-9.25	9.26-16.25	16.26 & Over
W20-7		2	
R11-2		2	
R11-4		2	
W20-3		4	

STATE	PROJECT N0.	YEAR	SHEET NO.	TOTAL SHEETS
KANSAS	2 C-5327-01	2026	34	39

DATE	BY	
REFERENCES NOTED		
REFERENCES CHECKED		

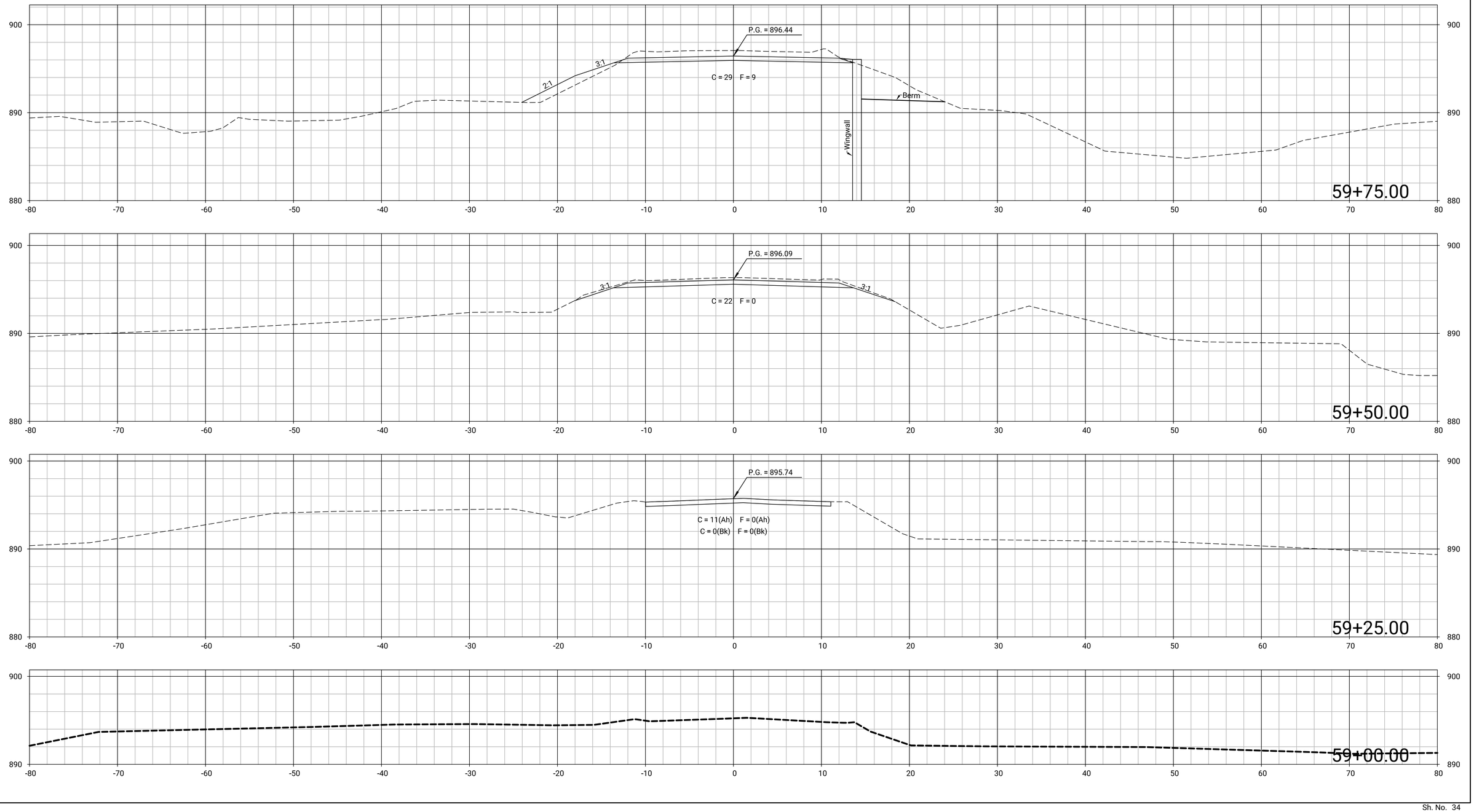

Plotted by : Twhitson 23-FEB-2026 10:42
File : 100_c532701rxs-01.dgn

STATE	PROJECT N0.	YEAR	SHEET NO.	TOTAL SHEETS
KANSAS	2 C-5237-01	2026	35	39

DATE	BY	
		REFERENCES NOTED
		REFERENCES CHECKED

Plotted by : Twhitson 23-FEB-2026 10:05
File : 100_c532701rxs-01.dgn

STATE	PROJECT N0.	YEAR	SHEET NO.	TOTAL SHEETS
KANSAS	2 C-5327-01	2026	36	39

DATE	BY	REFERENCES NOTED	REFERENCES CHECKED

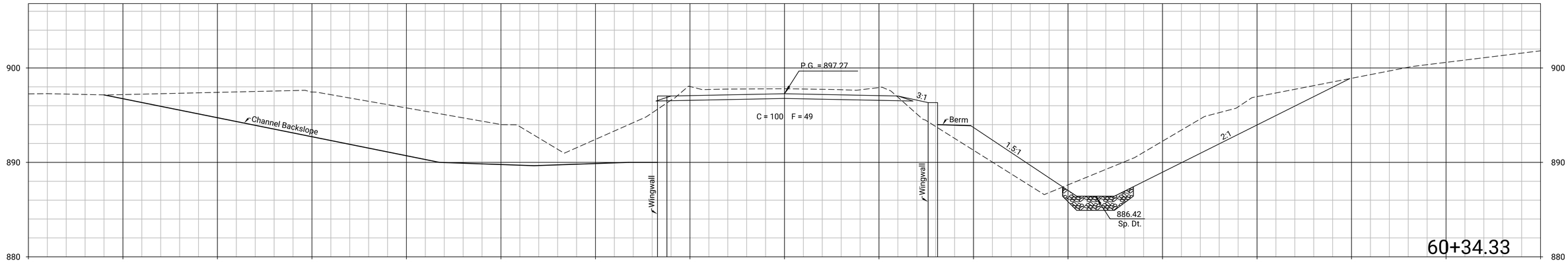

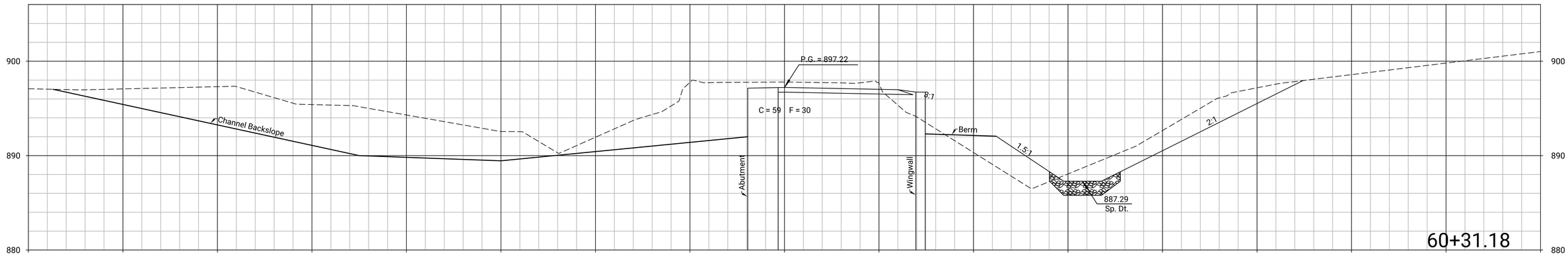

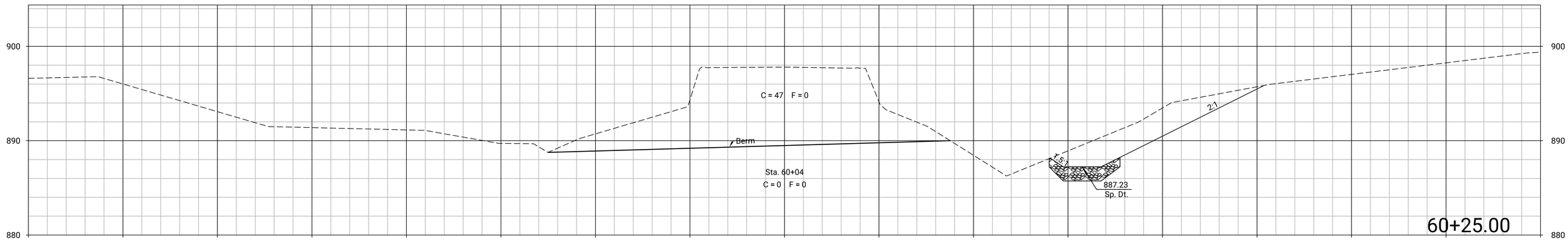

Plotted by : Twhitson 24-FEB-2026 11:12
File : 100_c532701rxs-01.dgn

STATE	PROJECT N0.	YEAR	SHEET NO.	TOTAL SHEETS
KANSAS	2 C-5327-01	2026	37	39

DATE	BY	REFERENCES NOTED	REFERENCES CHECKED

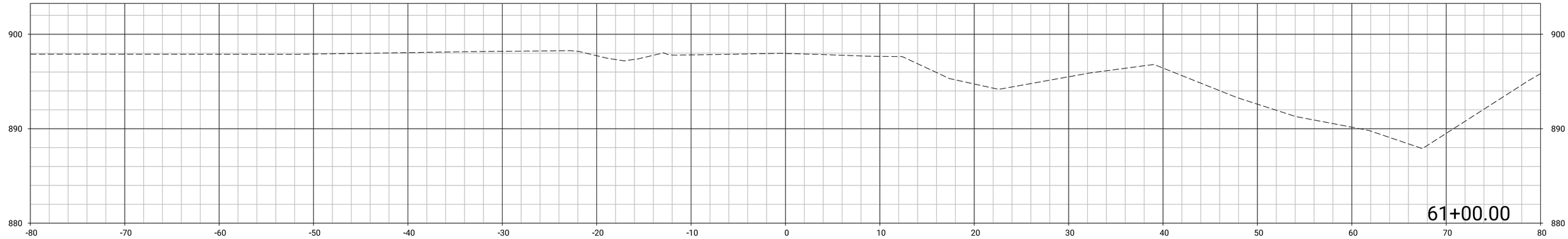

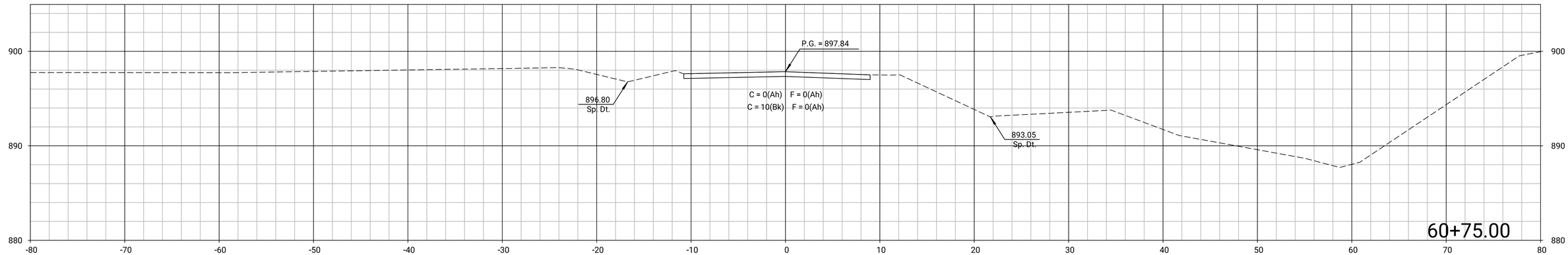

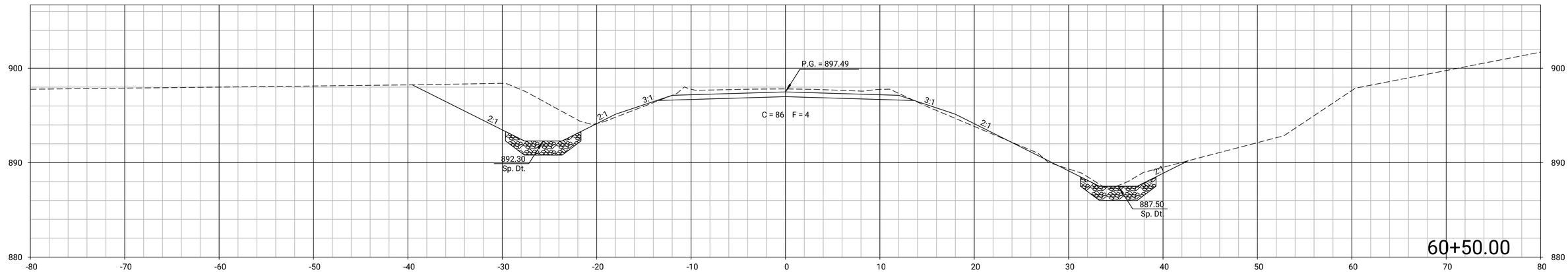

Plotted by : Twhitson 24-FEB-2026 11:18
File : 100_c532701rxs-01.dgn

STATE	PROJECT NO.	YEAR	SHEET NO.	TOTAL SHEETS
KANSAS	2 C-5327-01	2026	38	39

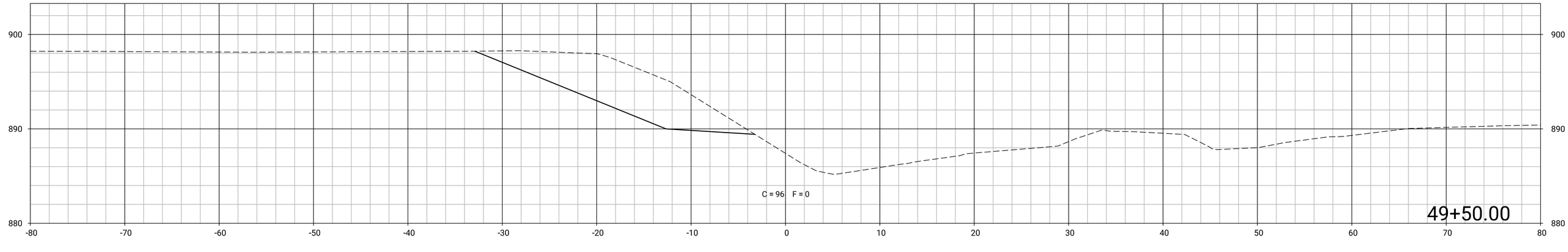

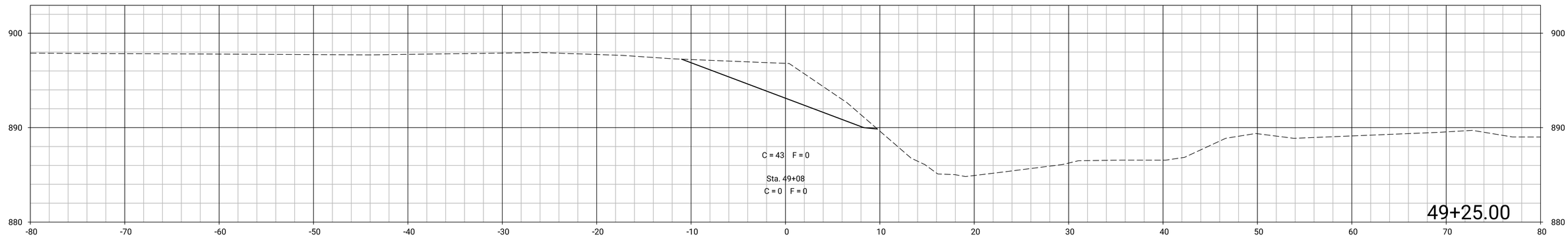

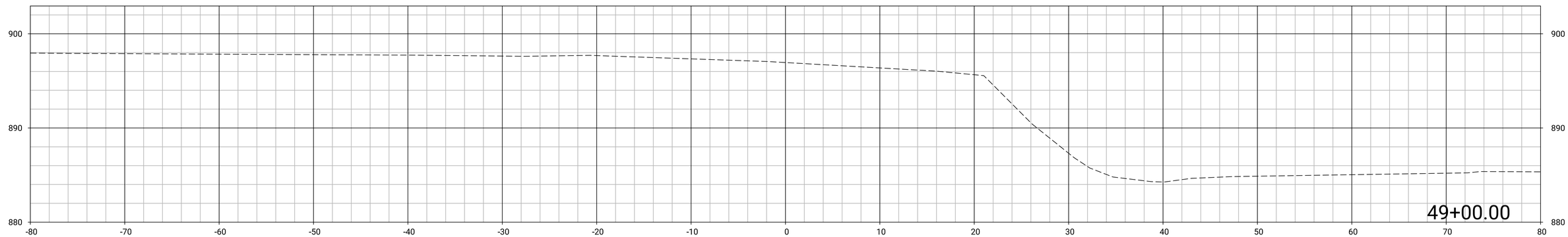

DATE	BY	
		REFERENCES NOTED
		REFERENCES CHECKED

Plotted by: Twhitson 23-FEB-2026 10:06
File: 00_c532701r-xs-02.dgn

STATE	PROJECT NO.	YEAR	SHEET NO.	TOTAL SHEETS
KANSAS	2 C-5327-01	2026	39	39

DATE	BY	REFERENCES NOTED	REFERENCES CHECKED

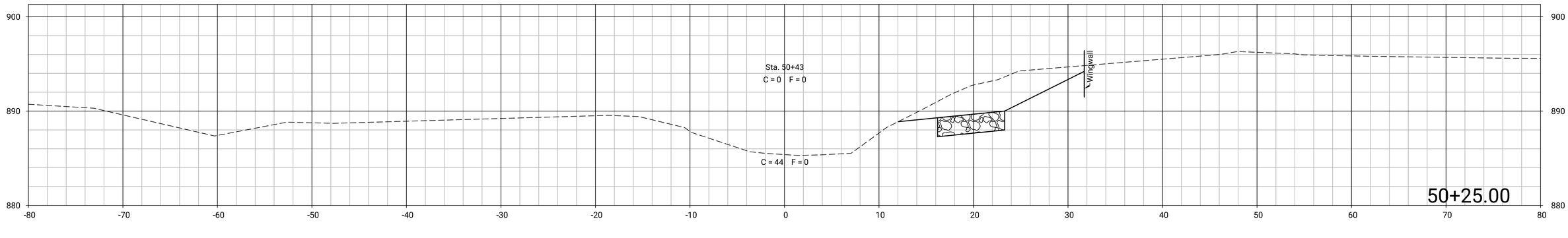

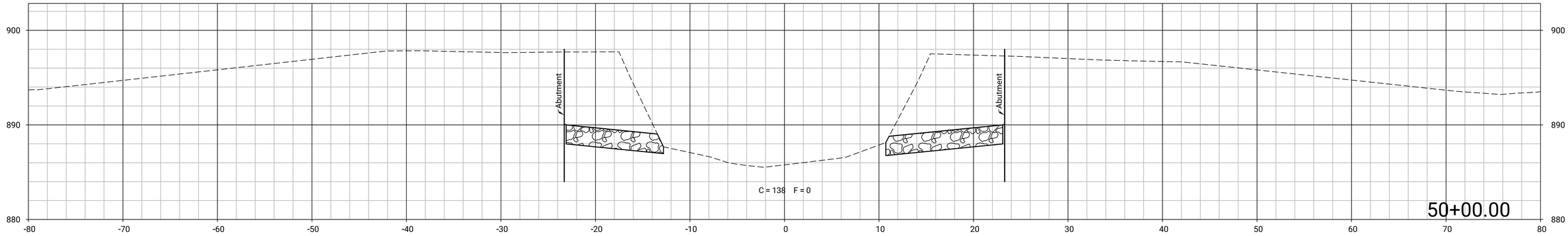

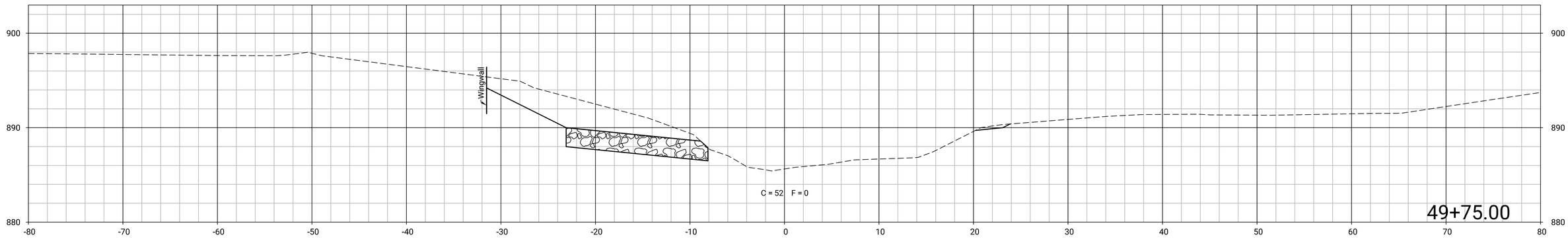

Plotted by : Twhitson 24-FEB-2026 11:24
File : 100_c532701rxs-02.dgn