04/13/2026
Released for Construction

SEC/SUR 01 TWP 48N RGE 13W

# (87.8'-69.8') CONTINOUS PRESTRESSED CONCRETE NU-GIRDER SPANS

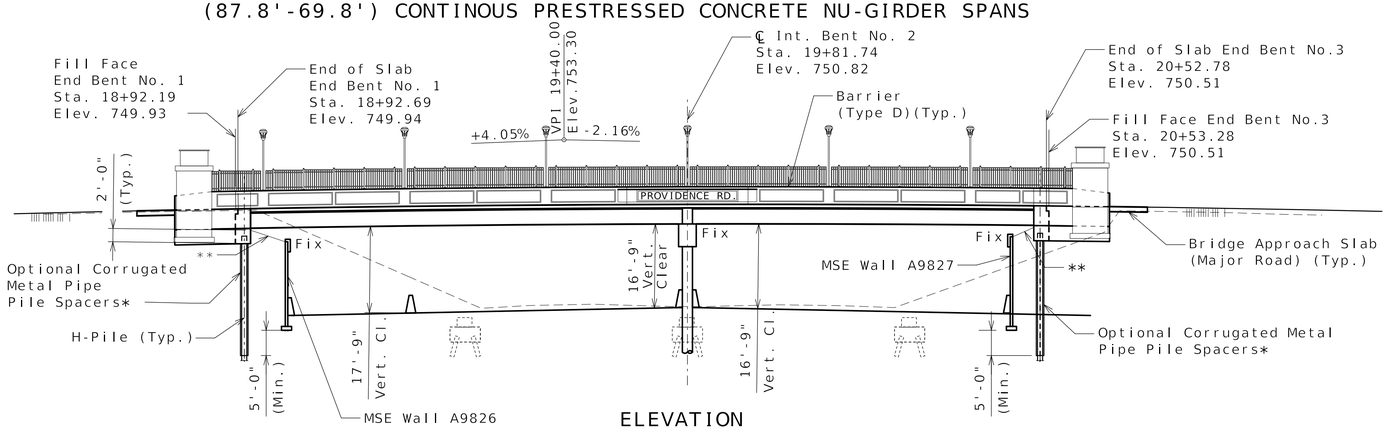


ELEVATION

**2:1 (H:V) Slope (Normal)
Type 2 Rock Blanket with
Permanent Erosion Control Geotextile

*Corrugated metal pipe pile spacers are required if MSE wall construction takes place prior to installation of H-piles.
Pile spacers are optional if H-piles are installed prior to MSE wall construction.
Roadway fill, exclusive of Select Granular Backfill for Structural Systems, shall be completed to the final roadway section and up to the elevation of the bottom of the concrete beam within the limits of the structure and for not less than 25 feet in back of the fill face of the end bents before any piles are driven for any bents falling within the embankment section.

The pipe pile spacers shall have an inside diameter equal to 24 inches.

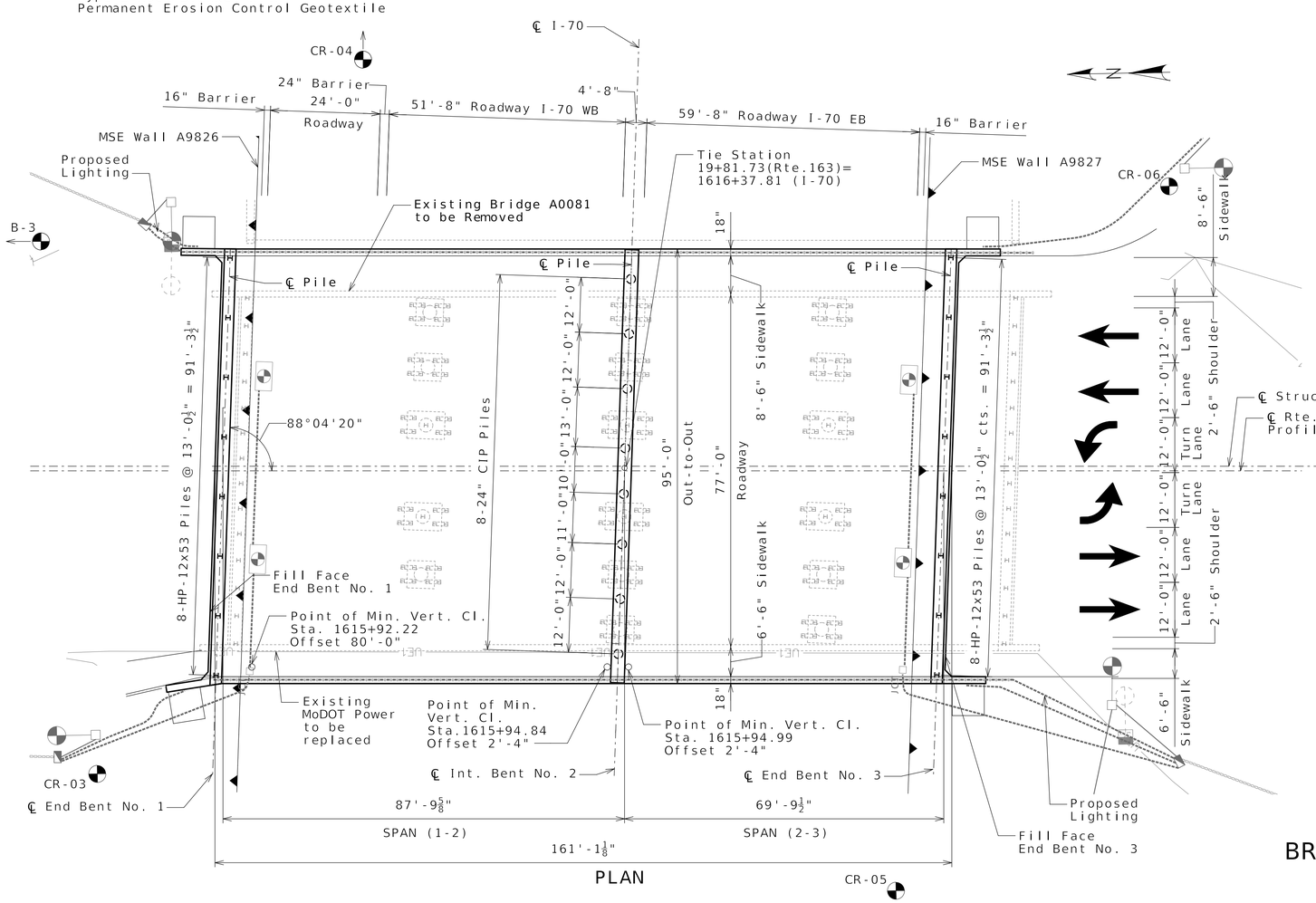


PLAN

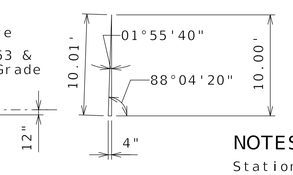


Indicates location of Borings.

Notice and Disclaimer Regarding Boring Log Data

The locations of all subsurface borings for this structure are shown on the plan sheet(s) for this structure. The boring data for all locations indicated as well as any other boring logs or other factual records of subsurface data and Investigations are shown on the Boring Log 01 Sheet,

## NOTES:

Stations and Elevations are along Route 163 unless otherwise noted.

For General Notes, Location Sketch and Foundation Data, see General Notes and Foundation Data Sheet.

## BENCHMARKS:

B.M. 33 - ELEVATION 745.195
MoGCS-i70 LOW DISTORTION
LOW DISTORTION PROJECTION DEVELOPED
FOR THE I-70 CORRIDOR "MO I-70 FT"
NORTHING = 1684102.3650
EASTING = 746004.9594
POINT DESCRIPTION 74/IR

B.M. 37 - ELEVATION = 746.470
MoGCS-i70 LOW DISTORTION
LOW DISTORTION PROJECTION DEVELOPED
FOR THE I-70 CORRIDOR "MO I-70 FT"
NORTHING = 1683744.3100
EASTING = 745961.5336
POINT DESCRIPTION 74/IR

# BRIDGE: RTE.163(PROVIDENCE ROAD) OVER I-70 GENERAL PLAN AND ELEVATION

ROUTE 163 AT 0.15 miles from I-70 West Bound
TIE STATION 1616+37.81 (I-70)

Designed JDS JAN 2026
Detailed MLS JAN 2026
Checked BK MAR 2026

Note: This drawing is not to scale. Follow dimensions.



STATE OF MISSOURI
TYSON B. STEIN
NUMBER PE-2013004346
PROFESSIONAL ENGINEER

| | |
|---|---|
| DATE PREPARED | 10-APR-2026 |
| ROUTE | I-70 |
| STATE | MO |
| DISTRICT | BR |
| SHEET NO. | BR12-01 |
| COUNTY | BOONE |
| JOB NUMBER | JST0017 |
| CONTRACT ID. | 251203-D01 |
| PROJECT NO. | IS 70-2(128) |
| BRIDGE NO. | A9825 |

| REV | DATE | DESCRIPTION |
|---|---|---|
| 0 | 041026 | RFC Submittal |

IF A SEAL IS PRESENT ON THIS SHEET IT HAS BEEN ELECTRONICALLY SEALED AND DATED.

MISSOURI HIGHWAYS AND TRANSPORTATION COMMISSION
105 WEST CAPITOL
JEFFERSON CITY, MO 65102
1-888-ASK-MODOT (1-888-275-6636)

IMPROVE I-70 ROCHEPORT TO COLUMBIA

PARSONS
530 MARYVILLE CENTRE DRIVE, SUITE 400
ST. LOUIS, MISSOURI 63141 · 314.434.2800

EMERY SAPPS SONS, INC

MO STATE CERTIFICATE OF AUTHORITY #000479 ENGINEERING

REV. RevDesc

04/13/2026
Released for Construction

# GENERAL NOTES

**Design Specifications:**

2020 AASHTO LRFD Bridge Design Specifications (9th Ed.)

Seismic:

2023 AASHTO Guide Specifications for LRFD Seismic Bridge Design (3rd Ed.).

Seismic Design Category = A2

Design earthquake response spectral acceleration coefficient at 1.0 second period, SD1 = 0.124.
Acceleration Coefficient (effective peak ground acceleration coefficient), As = 0.079.

**Design Loading:**

Vehicular = HL-93
Future Wearing Surface = 35 lb/sf
Earth = 120 lb/cf
Equivalent Fluid Pressure: 45 lb/cf (Min.)
Superstructure: Simply-Supported, Non-Composite for dead load. Continuous Composite for live load.

**Design Unit Stresses:**

Class A-1 Concrete (PPC Girders).....f'c = 9,000 psi
f'ci= 7,500 psi

Class B Concrete (Substructure - End Bent 1 & 3 Caps).....f'c = 3,000 psi

Class B-1 (Substructure - Pipe Pile Infill & Bent 2 Cap)...f'c = 4,000 psi

Class B-2 Concrete (Superstructure, except Barrier).....f'c = 4,000 psi

Class B-1 Concrete (Barrier).....f'c = 4,000 psi

Reinforcing Steel (ASTM A615 Grade 60).....fy = 60,000 psi

Structural Steel HP Pile (ASTM A709 Grade 50).....fy = 50,000 psi

Welded or Seamless steel shell (pipe) for CIP pile (ASTM A252 Modified Grade 3).....fy = 50,000 psi

**Neoprene Pads:**

Neoprene bearing pads shall be 60 durometer and shall be in accordance with Sec 716.

**Driven Piles:**

All piles shall be galvanized down to the minimum galvanized penetration (elevation).

Pile point reinforcement need not be galvanized. Shop drawings will not be required for pile point reinforcement.

The contractor shall make every effort to achieve the minimum galvanized penetration (elevation) shown on the plans for all piles. Deviations in penetration less than 5 feet of the minimum will be considered acceptable provided the contractor makes the necessary corrections to ensure the minimum penetration is achieved on subsequent piles.

**Joint Filler:**

All joint filler shall be in accordance with Sec 1057 for preformed sponge rubber expansion and partition joint filler, except as noted.

**Reinforcing Steel:**

Minimum clearance to reinforcing steel shall be 1½", unless otherwise shown.

**Traffic Handling:**

Structure to be closed during construction. See roadway plans for traffic control.

Vertical clearance for Interstate 70 traffic during construction shall be 15'-6" minimum over the horizontal opening of the roadway defined in the maintenance of traffic plans.

**Concrete:**

All exposed edges of concrete shall be beveled ¾" unless otherwise shown or noted.

Keys shall be provided for all construction joints unless otherwise shown. Construction joint locations shall be approved by the engineer.

**Concrete Protective Coatings:**

All substructure elements that are above ground and within the splash zone and all end bents shall be treated with Concrete Protective Coating (Epoxy) in accordance with Sec 711.

**Miscellaneous:**

All dimensions are horizontal unless noted otherwise. Drawings shall not be scaled.

**Stay-In-Place Corrugated Steel Forms:**

Corrugated steel forms, supports, closure elements and accessories shall be in accordance with grade requirement and coating designation G165 of ASTM A653. Complete shop drawings of the permanent steel deck forms shall be required in accordance with Sec 1080.

Corrugations of stay-in-place forms shall be filled with an expanded polystyrene material. The polystyrene material shall be placed in the forms with an adhesive in accordance with the manufacturer's recommendations.

Form sheets shall not rest directly on the top of girder flanges. Sheets shall be securely fastened to form supports with a minimum bearing length of one inch on each end. Form supports shall be placed in direct contact with the flange. Welding on or drilling holes in the girder flanges will not be permitted. All steel fabrication and construction shall be in accordance with Sec 1080 and 712. Certified field welders will not be required for welding of the form supports.

The design of stay-in-place corrugated steel forms is per manufacturer which shall be in accordance with Sec 703 for false work and forms. Maximum actual weight of corrugated steel forms allowed shall be 4 psf assumed for girder loading.

## Foundation Data

| Type | Design Data | | Bent Number 1 | Bent Number 2 | Bent Number 3 |
|---|---|---|---|---|---|
| Load Bearing Pile | Pile Type and Size | | HP12x53 | CECIP 24" | HP12x53 |
| | Number | ea | 8 | 8 | 8 |
| | Approximate Length Per Each | ft | 54 | 67 | 50 |
| | Pile Point Reinforcement | ea | 8 | 8 | 8 |
| | Min. Galvanized Penetration (Elev.) | ft | 722.00 | 707.50 | Full Length |
| | Minimum Tip Penetration (Elev.) | ft | 713.50 | 697.50 | 713.50 |
| | Criteria for Min. Tip Penetration | | Min. Embed. | Min. Embed. | Min. Embed. |
| | Pile Driving Verification Method | | Refusal | DT | Refusal |
| | Resistance Factor | | 0.50 | 0.75 | 0.50 |
| | Minimum Nominal Axial Compressive Resistance | kip | 720 | 1290 | 720 |

DT = Dynamic Testing
All piles at the intermediate bent to be monitored with dynamic testing during driving.
Load Bearing Piles:
Minimum Nominal Axial Compressive Resistance = $\frac{\text{Maximum Factored Loads}}{\text{Resistance Factor}}$

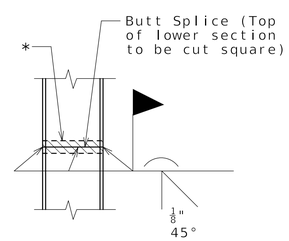


STEEL PILE SPLICE
(If required)

* Galvanizing material shall be omitted or removed one inch clear of weld locations in accordance with Sec 702.

# INDEX OF DRAWINGS


1 General Plan and Elevation
2 General Notes and Foundation Data
3 Typical Section
4 End Bent 1 Details 01
5 End Bent 1 Details 02
6 End Bent 1 Details 03
7 Intermediate Bent 2 Plan and Elevation
8 Intermediate Bent 2 Details
9 Intermediate Bent 2 Pipe Pile Details
10 End Bent 3 Details 01
11 End Bent 3 Details 02
12 End Bent 3 Details 03
13 Vertical Drain at End Bents
14 Framing Plan
15 Prestressed Concrete NU Girder Details - (Span 1-2)
16 Prestressed Concrete NU Girder Details - (Span 2-3)
17 Intermediate Bent Concrete Diaphragm Details
18 Slab Elevations, Haunching, & Girder Camber
19 Slab Reinforcing Plan
20 Slab Reinforcing Section & Pouring Sequence
21 Slab Drain Details
22 Type D Barrier Curb Details 01
23 Type D Barrier Curb Details 02
24 Sidewalk Details
25 Fence Details
26 Conduit Details
27 Sign Support Details 01
28 Sign Support Details 02
29 Aesthetic Details 01
30 Aesthetic Details 02
31 North Bridge Approach Slab
32 South Bridge Approach Slab
33 Bending Diagrams
34 Bill of Reinforcing 01
35 Bill of Reinforcing 02
36 As-Built Foundation Data
37 Boring Logs 01


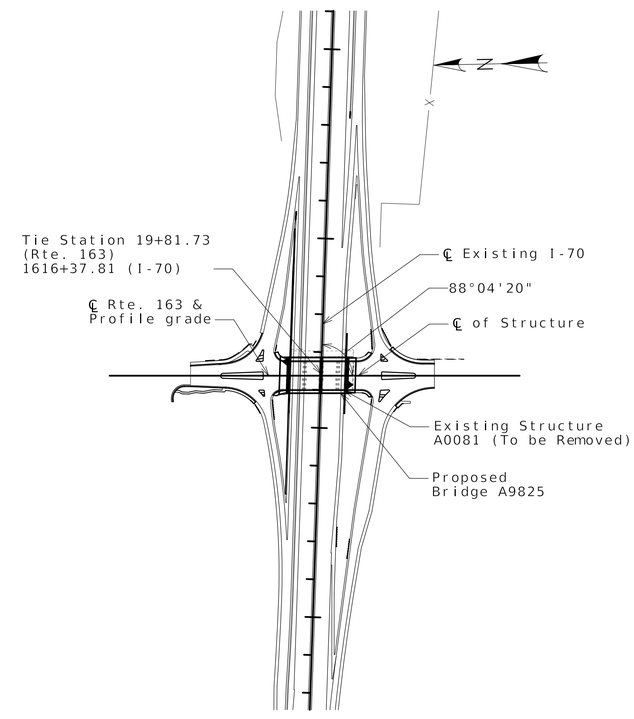


LOCATION SKETCH

# GENERAL NOTES AND FOUNDATION DATA

Designed JDS JAN 2026
Detailed PAC JAN 2026
Checked BK MAR 2026

Note: This drawing is not to scale. Follow dimensions.



STATE OF MISSOURI
TYSON B. STEIN
NUMBER PE-2013004346
PROFESSIONAL ENGINEER

DATE PREPARED 10-APR-2026
ROUTE I-70 | STATE MO
DISTRICT BR | SHEET NO. BR12-02
COUNTY BOONE
JOB NUMBER JST0017
CONTRACT ID. 251203-D01
PROJECT NO. IS 70-2(128)
BRIDGE NO. A9825

| REV | DATE | DESCRIPTION |
|---|---|---|
| 0 | 041026 | RFC Submittal |

MISSOURI HIGHWAYS AND TRANSPORTATION COMMISSION
105 WEST CAPITOL
JEFFERSON CITY, MO 65102
1-888-ASK-MODOT (1-888-275-6636)

IMPROVE I-70 ROCHEPORT TO COLUMBIA

PARSONS
530 MARYVILLE CENTRE DRIVE, SUITE 400
ST. LOUIS, MISSOURI 63141 - 314.434.2800

EMERY SAPPS & SONS, INC

MO STATE CERTIFICATE OF AUTHORITY #000479 ENGINEERING

IF A SEAL IS PRESENT ON THIS SHEET IT HAS BEEN ELECTRONICALLY SEALED AND DATED.

REV. RevDesc

04/13/2026
Released for Construction

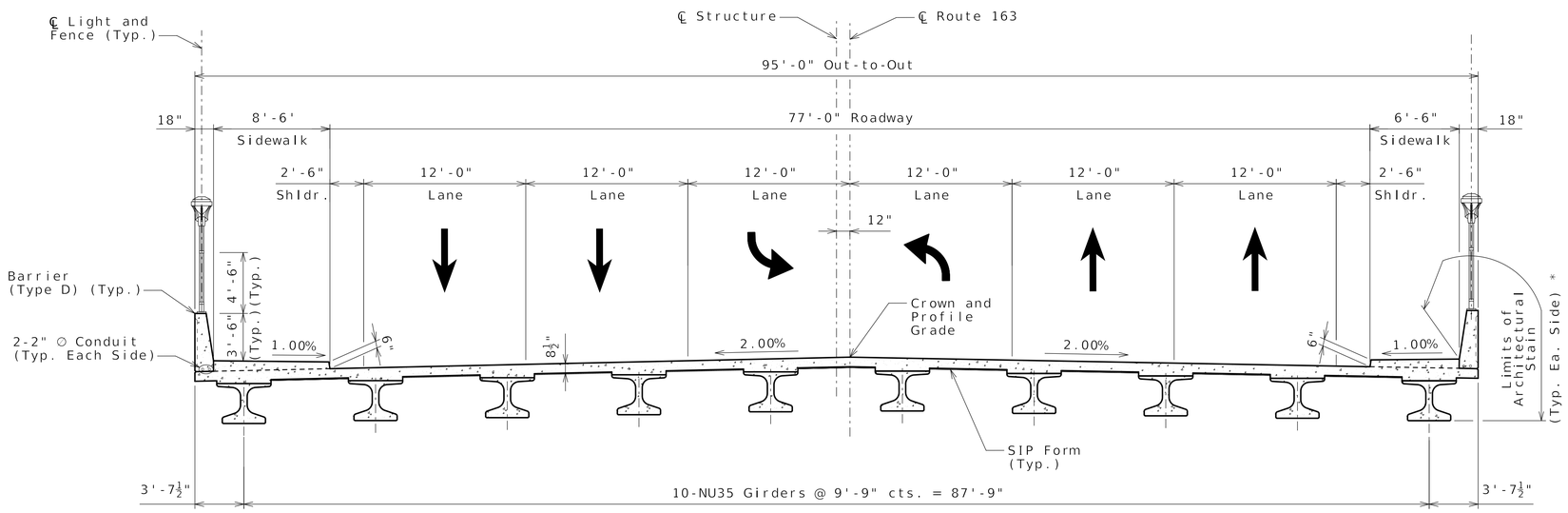


TYPICAL SECTION

(Looking Upstation)

* Exposed concrete surfaces including front face, top, and back face of barrier, edge of deck, and exterior face of exterior beam, shall be stained and sealed with H&C Solid Stain and Sealer. Color: Cemented Deal.

Contractor shall utilize smooth, well-oiled forms to minimize honey-combing.

TYPICAL SECTION

Designed JDS JAN 2026
Detailed PAC JAN 2026
Checked BK FEB 2026

Note: This drawing is not to scale. Follow dimensions.



STATE OF MISSOURI
TYSON B. STEIN
NUMBER PE-2013004346
PROFESSIONAL ENGINEER

| DATE PREPARED | |
|---|---|
| 11-APR-2026 | |
| ROUTE I-70 | STATE MO |
| DISTRICT BR | SHEET NO. BR12-03 |
| COUNTY BOONE | |
| JOB NUMBER JST0017 | |
| CONTRACT ID. 251203-D01 | |
| PROJECT NO. IS 70-2(128) | |
| BRIDGE NO. A9825 | |

| REV | DATE | DESCRIPTION |
|---|---|---|
| 0 | 041026 | RFC Submittal |

IF A SEAL IS PRESENT ON THIS SHEET IT HAS BEEN ELECTRONICALLY SEALED AND DATED.

MISSOURI HIGHWAYS AND TRANSPORTATION COMMISSION
105 WEST CAPITOL
JEFFERSON CITY, MO 65102
1-888-ASK-MODOT (1-888-275-6636)

IMPROVE I-70 ROCHEPORT TO COLUMBIA

PARSONS
530 MARYVILLE CENTRE DRIVE, SUITE 400
ST. LOUIS, MISSOURI 63141 - 314.434.2900

EMERY SAPP & SONS, INC

MO STATE CERTIFICATE OF AUTHORITY #000479 ENGINEERING

REV. RevDesc

04/13/2026
Released for Construction

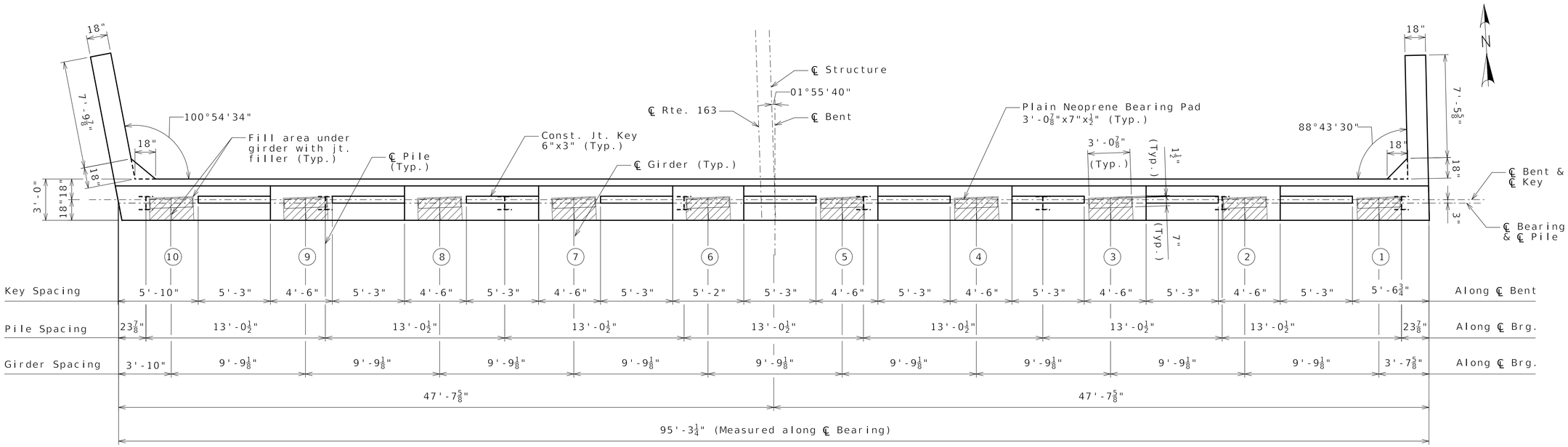


PLAN OF BEAM

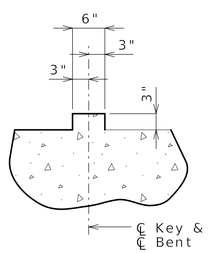


SECTION THRU KEY

## NOTES:

Work this sheet with End Bent 1 Details 02 & 03 Sheets.

All concrete in the end bent above top of beam and below top of slab shall be Class B-2.

For details of Vertical Drain, see Vertical Drain at End Bent sheet.

Strands at end of the girders shall be field bent or, if necessary, cut in field to maintain 1½" minimum clearance to fill face of end bent.

Reinforcement steel shall be shifted to clear piles. U-Bars shall clear piles by at least 1½ inches.

The U-Bars and pairs of V-Bars shall be placed parallel to centerline of roadway.

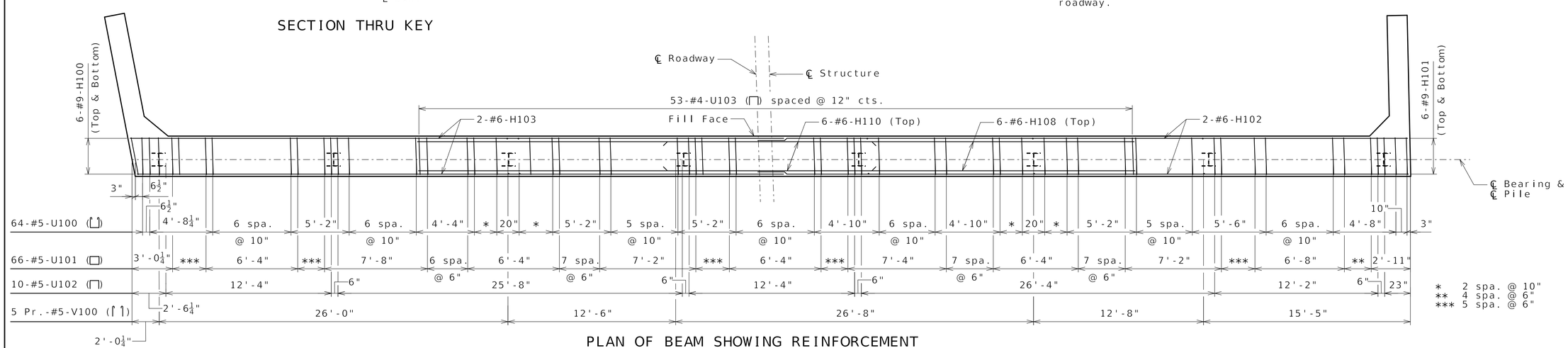


PLAN OF BEAM SHOWING REINFORCEMENT
(Construction Joint Keys and Beam Steps not shown for clarity)

# END BENT NO. 1
# DETAILS 01

Designed BK JAN 2026
Detailed JDS JAN 2026
Checked BK FEB 2026

Note: This drawing is not to scale. Follow dimensions.



STATE OF MISSOURI
TYSON B. STEIN
NUMBER PE-2013004346
PROFESSIONAL ENGINEER

| | |
|---|---|
| DATE PREPARED | 11-APR-2026 |
| ROUTE | I-70 |
| STATE | MO |
| DISTRICT | BR |
| SHEET NO. | BR12-04 |
| COUNTY | BOONE |
| JOB NUMBER | JST0017 |
| CONTRACT ID. | 251203-D01 |
| PROJECT NO. | IS 70-2(128) |
| BRIDGE NO. | A9825 |

| REV | DATE | DESCRIPTION |
|---|---|---|
| 0 | 041026 | RFC Submittal |

IF A SEAL IS PRESENT ON THIS SHEET IT HAS BEEN ELECTRONICALLY SEALED AND DATED.

MISSOURI HIGHWAYS AND TRANSPORTATION COMMISSION
105 WEST CAPITOL
JEFFERSON CITY, MO 65102
1-888-ASK-MODOT (1-888-275-6636)

IMPROVE I-70 ROCHEPORT TO COLUMBIA

PARSONS
530 MARYVILLE CENTRE DRIVE, SUITE 400
ST. LOUIS, MISSOURI 63141 - 314.434.2800

EMERY SAPPE & SONS, INC

MO STATE CERTIFICATE OF AUTHORITY #000479 ENGINEERING

REV. RevDesc

04/13/2026
Released for Construction

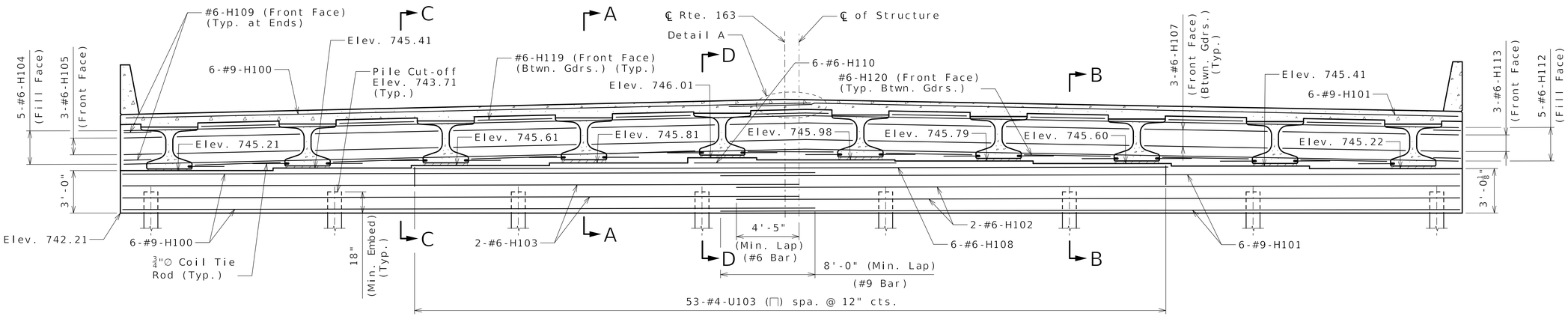


## SECTION NEAR END BENT

(Construction Joint Key and Vertical Reinforcement not shown for clarity)

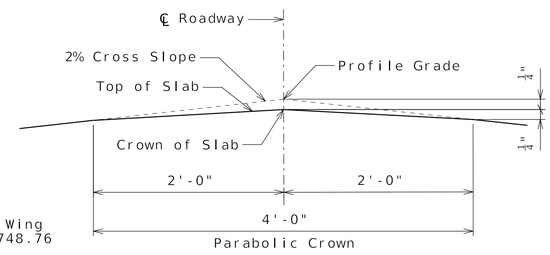


## DETAIL A

## Notes:

Work this sheet with End Bent 1 Details 01 and 03 sheets.

The U bars and pairs of V bars shall be placed parallel to centerline of roadway.

For reinforcement of the Type D Barrier, see Barrier Details 02.

The #6-F100 and #6-F102 bars shall be bent in the field to clear girders.

All concrete in the end bent above top of beam and below top of slab shall be Class B-2.

Strands at the end of the girders shall be field bent or, if necessary, cut in field to maintain 1½" minimum clearance to fill face of end bent.

For location of coil tie rods and #5-H111 (strand tie bar), see Prestressed Concrete NU Girder detail sheet.

For details of bridge approach slab, see Bridge Approach Slab (Major) sheet.

#4-U103 to be placed with #6-H108 or #6-H110, whichever is top longitudinal bar at the location.

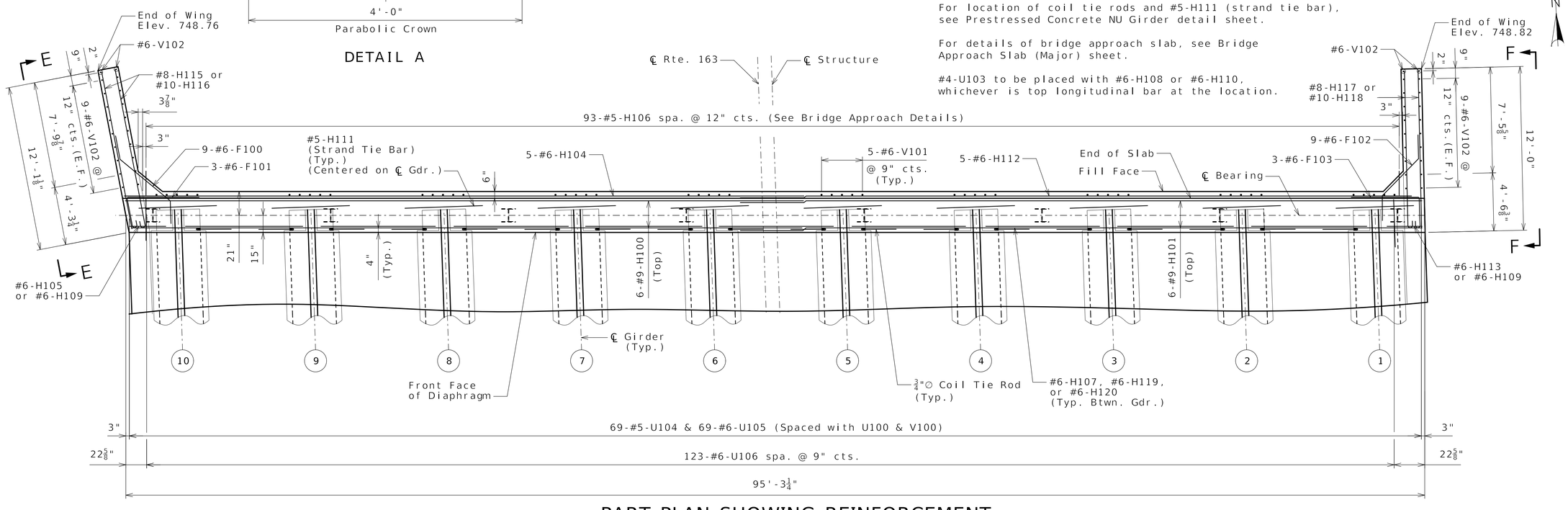


## PART PLAN SHOWING REINFORCEMENT

# END BENT NO. 1 DETAILS 02

Designed BK JAN 2026
Detailed PAC JAN 2026
Checked JDS MAR 2026

Note: This drawing is not to scale. Follow dimensions.



STATE OF MISSOURI — TYSON B. STEIN — NUMBER PE-2013004346 — PROFESSIONAL ENGINEER

| | |
|---|---|
| DATE PREPARED | 11-APR-2026 |
| ROUTE | I-70 |
| STATE | MO |
| DISTRICT | BR |
| SHEET NO. | BR12-05 |
| COUNTY | BOONE |
| JOB NUMBER | JST0017 |
| CONTRACT ID. | 251203-D01 |
| PROJECT NO. | IS 70-2(128) |
| BRIDGE NO. | A9825 |

| REV | DATE | DESCRIPTION |
|---|---|---|
| 0 | 041026 | RFC Submittal |

IF A SEAL IS PRESENT ON THIS SHEET IT HAS BEEN ELECTRONICALLY SEALED AND DATED.

MISSOURI HIGHWAYS AND TRANSPORTATION COMMISSION
105 WEST CAPITOL
JEFFERSON CITY, MO 65102
1-888-ASK-MODOT (1-888-275-6636)

IMPROVE I-70 ROCHEPORT TO COLUMBIA

PARSONS
530 MARYVILLE CENTRE DRIVE, SUITE 400
ST. LOUIS, MISSOURI 63141 - 314.434.2800

EMERY SAPPS & SONS, INC

MO STATE CERTIFICATE OF AUTHORITY #000479 ENGINEERING

REV. RevDesc

04/13/2026
Released for Construction

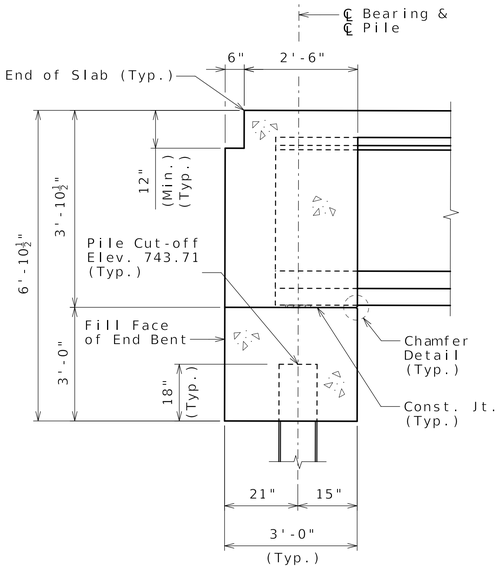


TYPICAL SECTION
(Near East Gutter Line)

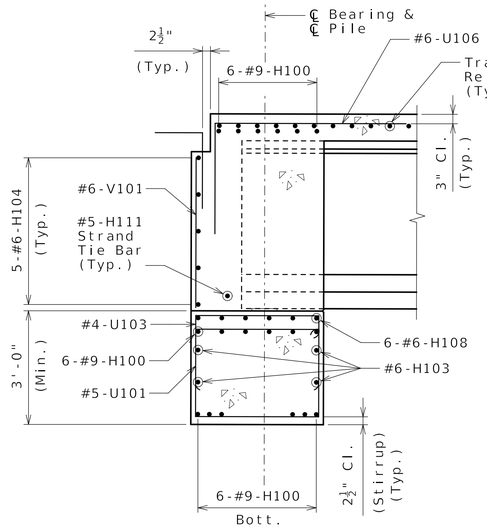


SECTION A-A

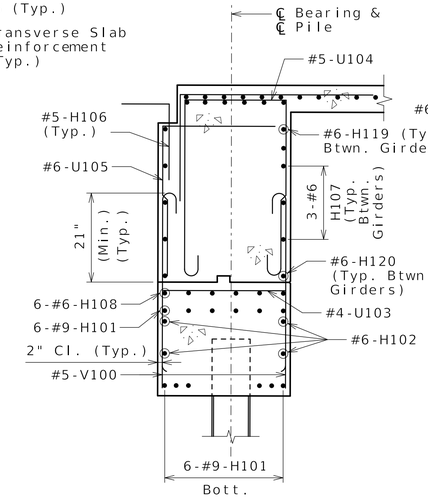


SECTION B-B

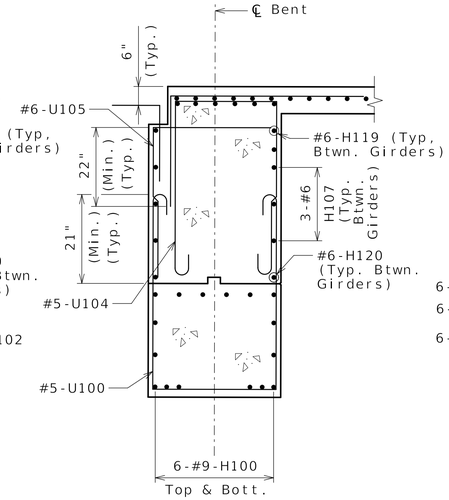


SECTION C-C

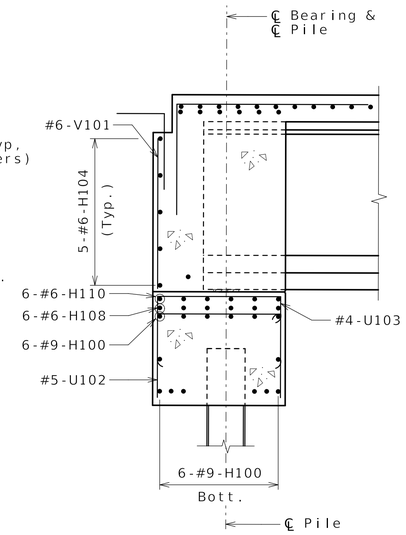


SECTION D-D

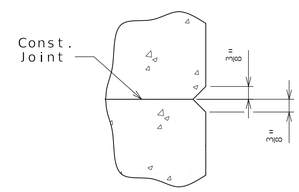


CHAMFER DETAIL

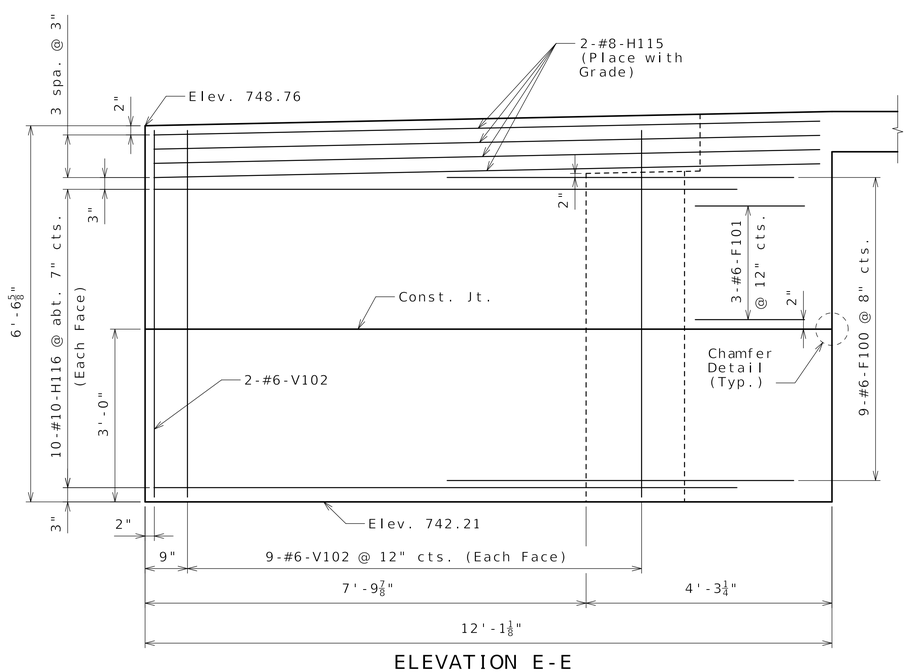


ELEVATION E-E

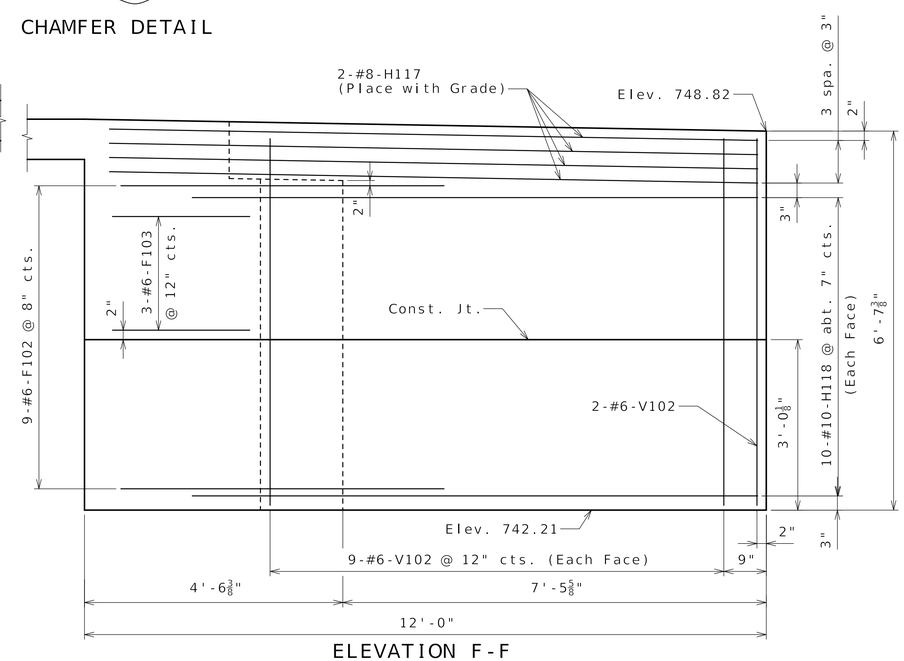


ELEVATION F-F

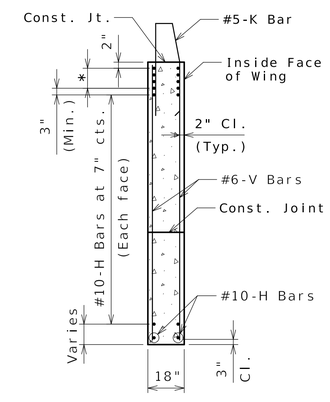


TYPICAL SECTION
THRU WING

* #8-H Bars at 3" cts.
(Each face)(Place with grade)

NOTES:

Work this sheet with End Bent 1 Details 01 & 02 Sheets.

For reinforcement of the barrier, see Barrier, Type D Details 02 sheet.

Exposed faces of wingwalls shall be stained and sealed with H&C Solid Stain and Sealer. Color: Cemented Deal.

Contractor shall utilize smooth, well-oiled forms to minimize honey-combing.

# END BENT NO. 1
# DETAILS 03

Designed BK JAN 2026
Detailed PAC JAN 2026
Checked JDS MAR 2026

Note: This drawing is not to scale. Follow dimensions.



STATE OF MISSOURI
TYSON B. STEIN
NUMBER PE-2013004346
PROFESSIONAL ENGINEER

| DATE PREPARED | |
|---|---|
| 11-APR-2026 | |
| ROUTE | STATE |
| I-70 | MO |
| DISTRICT | SHEET NO. |
| BR | BR12-06 |
| COUNTY | |
| BOONE | |
| JOB NUMBER | |
| JST0017 | |
| CONTRACT ID. | |
| 251203-D01 | |
| PROJECT NO. | |
| IS 70-2(128) | |
| BRIDGE NO. | |
| A9825 | |

| REV | DATE | DESCRIPTION |
|---|---|---|
| 0 | 041026 | RFC Submittal |

MISSOURI HIGHWAYS AND TRANSPORTATION COMMISSION
105 WEST CAPITOL
JEFFERSON CITY, MO 65102
1-888-ASK-MODOT (1-888-275-6636)

IMPROVE I-70 ROCHEPORT TO COLUMBIA

PARSONS
530 MARYVILLE CENTRE DRIVE, SUITE 400
ST. LOUIS, MISSOURI 63141 - 314.434.2800

EMERY SAPPS & SONS, INC

MO STATE CERTIFICATE OF AUTHORITY #000479 ENGINEERING

IF A SEAL IS PRESENT ON THIS SHEET IT HAS BEEN ELECTRONICALLY SEALED AND DATED.

REV. RevDesc

04/13/2026
Released for Construction

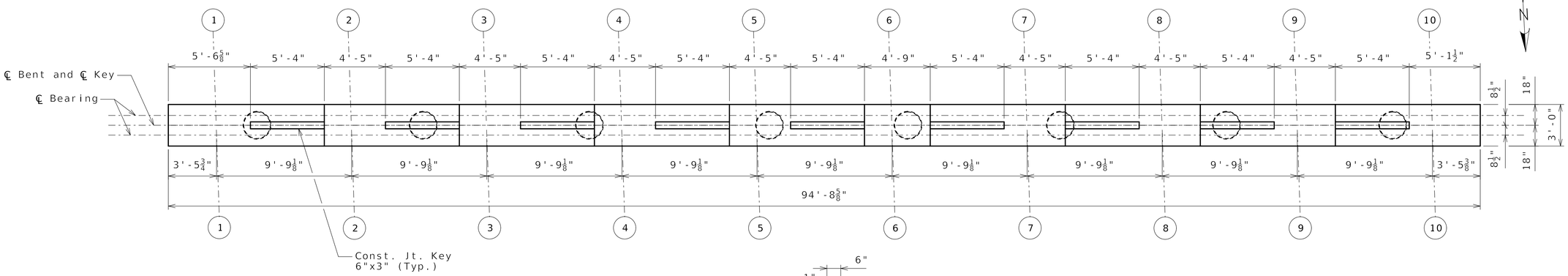


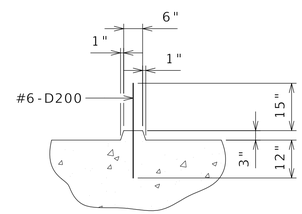


SECTION THRU KEY

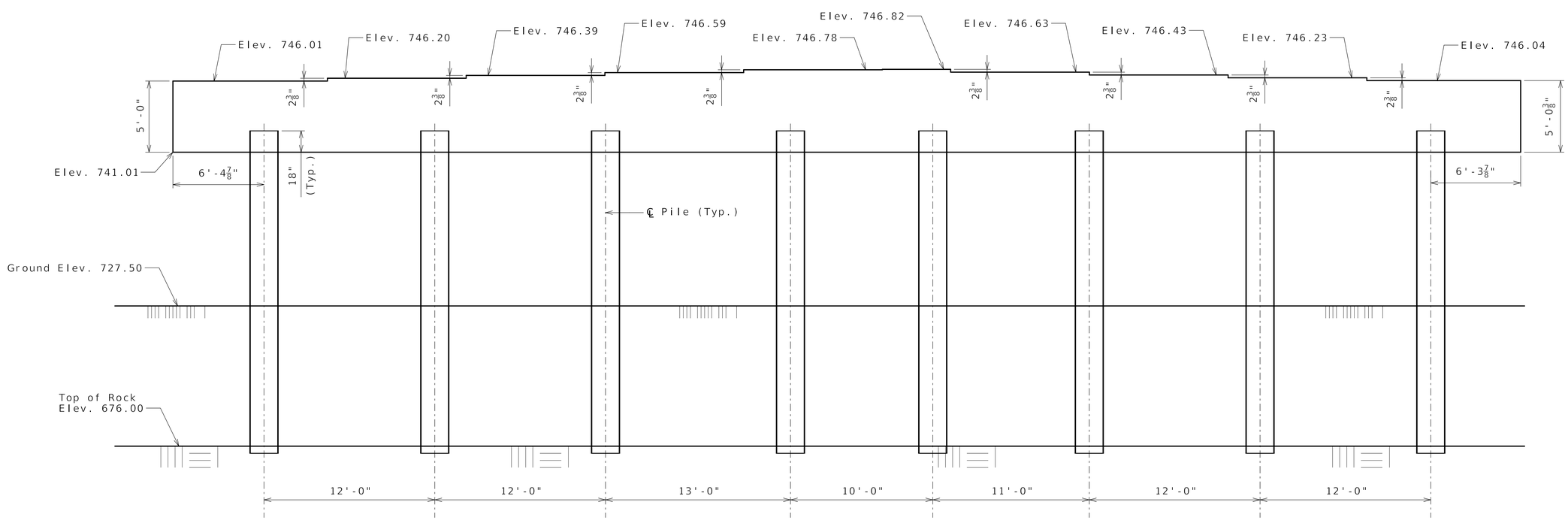


# INTERMEDIATE BENT NO. 2
# PLAN AND ELEVATION

Designed BK JAN 2026
Detailed JDS JAN 2026
Checked SDY APR 2026

Note: This drawing is not to scale. Follow dimensions.



STATE OF MISSOURI
TYSON B. STEIN
NUMBER PE-2013004346
PROFESSIONAL ENGINEER

| | |
|---|---|
| DATE PREPARED | 7-APR-2026 |
| ROUTE | I-70 |
| STATE | MO |
| DISTRICT | BR |
| SHEET NO. | BR12-07 |
| COUNTY | BOONE |
| JOB NUMBER | JST0017 |
| CONTRACT ID. | 251203-D01 |
| PROJECT NO. | IS 70-2(128) |
| BRIDGE NO. | A9825 |

| REV | DATE | DESCRIPTION |
|---|---|---|
| 0 | 041026 | RFC Submittal |

IF A SEAL IS PRESENT ON THIS SHEET IT HAS BEEN ELECTRONICALLY SEALED AND DATED.

MISSOURI HIGHWAYS AND TRANSPORTATION COMMISSION
105 WEST CAPITOL
JEFFERSON CITY, MO 65102
1-888-ASK-MODOT (1-888-275-6636)

IMPROVE I-70 ROCHEPORT TO COLUMBIA

PARSONS
530 MARYVILLE CENTRE DRIVE, SUITE 400
ST. LOUIS, MISSOURI 63141 - 314.434.2800

EMERY SAPPS & SONS, INC

MO STATE CERTIFICATE OF AUTHORITY #000479 ENGINEERING

REV. RevDesc

04/13/2026
Released for Construction

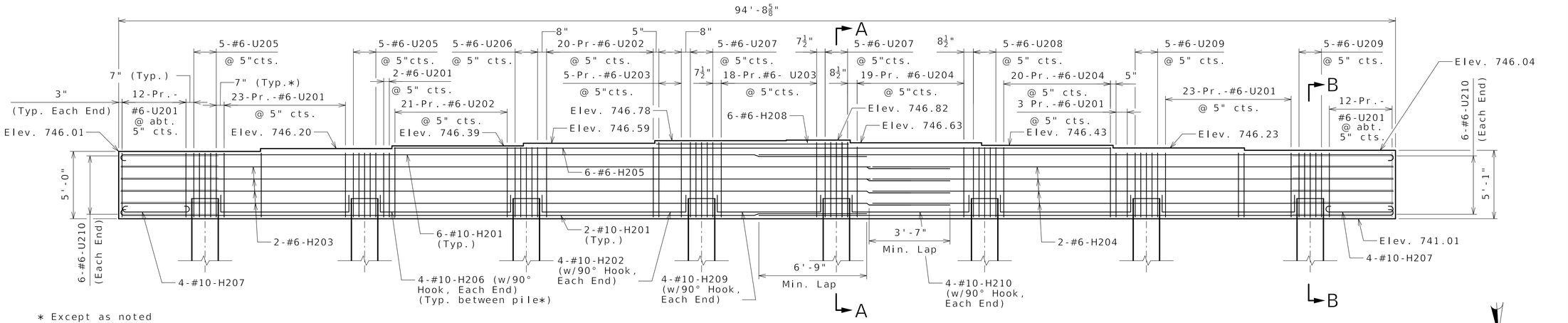


* Except as noted

## BEAM ELEVATION SHOWING REINFORCEMENT

(Looking Upstation)

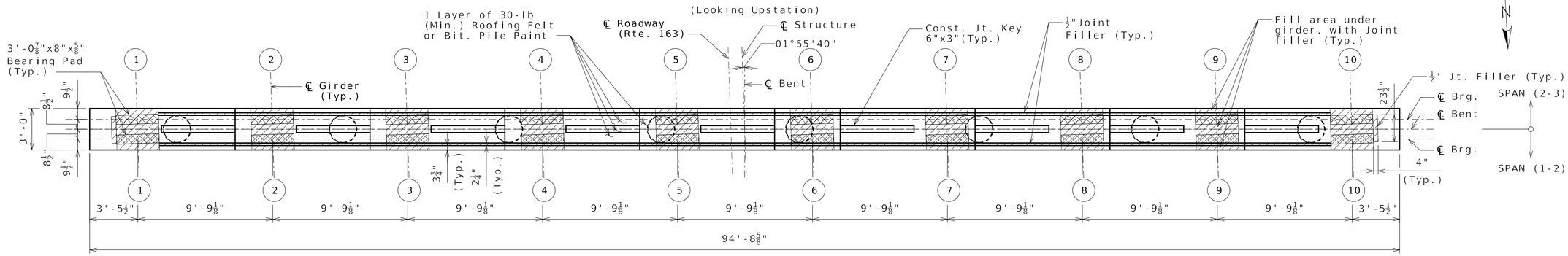


## PLAN OF BEAM

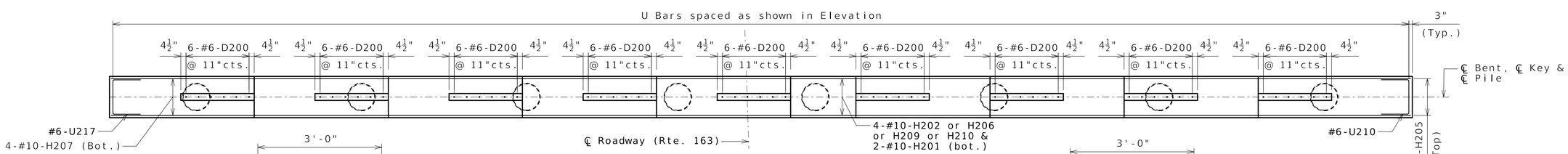


## PLAN OF BEAM SHOWING REINFORCEMENT

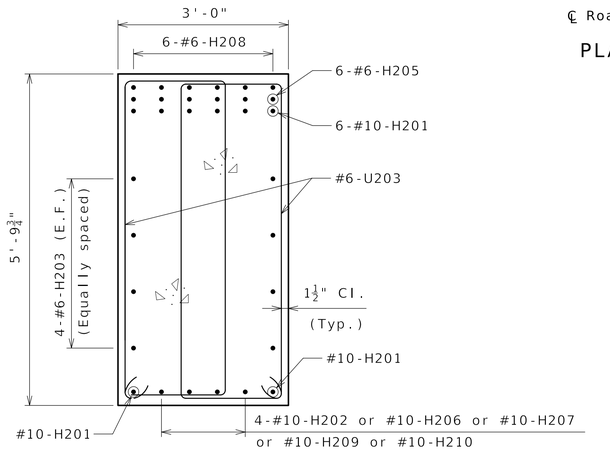


SECTION A-A

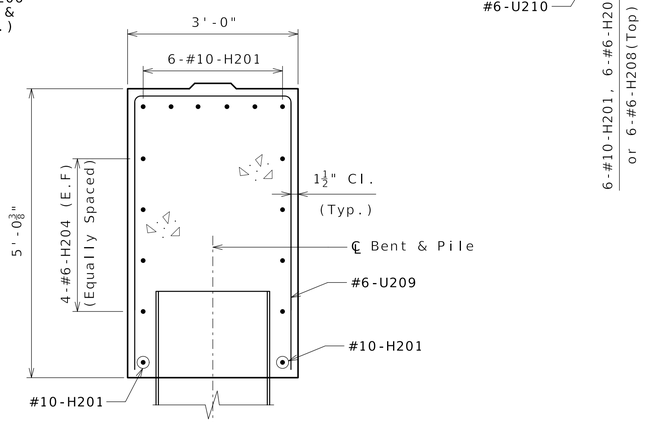


SECTION B-B

## INTERMEDIATE BENT NO. 2 DETAILS

Designed BK JAN 2026
Detailed JDS JAN 2026
Checked SDY APR 2026

Note: This drawing is not to scale. Follow dimensions.



B_A9825_08_JST0017_Int Bent 2 Details.dgn 2:40:12 AM Eastern 11-APR-2026

STATE OF MISSOURI
TYSON B. STEIN
NUMBER PE-2013004346
PROFESSIONAL ENGINEER

| | |
|---|---|
| DATE PREPARED | 11-APR-2026 |
| ROUTE | I-70 |
| STATE | MO |
| DISTRICT | BR |
| SHEET NO. | BR12-08 |
| COUNTY | BOONE |
| JOB NUMBER | JST0017 |
| CONTRACT ID. | 251203-D01 |
| PROJECT NO. | IS 70-2(128) |
| BRIDGE NO. | A9825 |

| REV | DATE | DESCRIPTION |
|---|---|---|
| 0 | 041026 | RFC Submittal |

IF A SEAL IS PRESENT ON THIS SHEET IT HAS BEEN ELECTRONICALLY SEALED AND DATED.

MISSOURI HIGHWAYS AND TRANSPORTATION COMMISSION
105 WEST CAPITOL
JEFFERSON CITY, MO 65102
1-888-ASK-MODOT (1-888-275-6636)

IMPROVE I-70 ROCHEPORT TO COLUMBIA

PARSONS
530 MARYVILLE CENTRE DRIVE, SUITE 400
ST. LOUIS, MISSOURI 63141 - 314.434.2800

EMERY SAPP & SONS, INC

MO STATE CERTIFICATE OF AUTHORITY #000479 ENGINEERING

REV. RevDesc

04/13/2026
Released for Construction

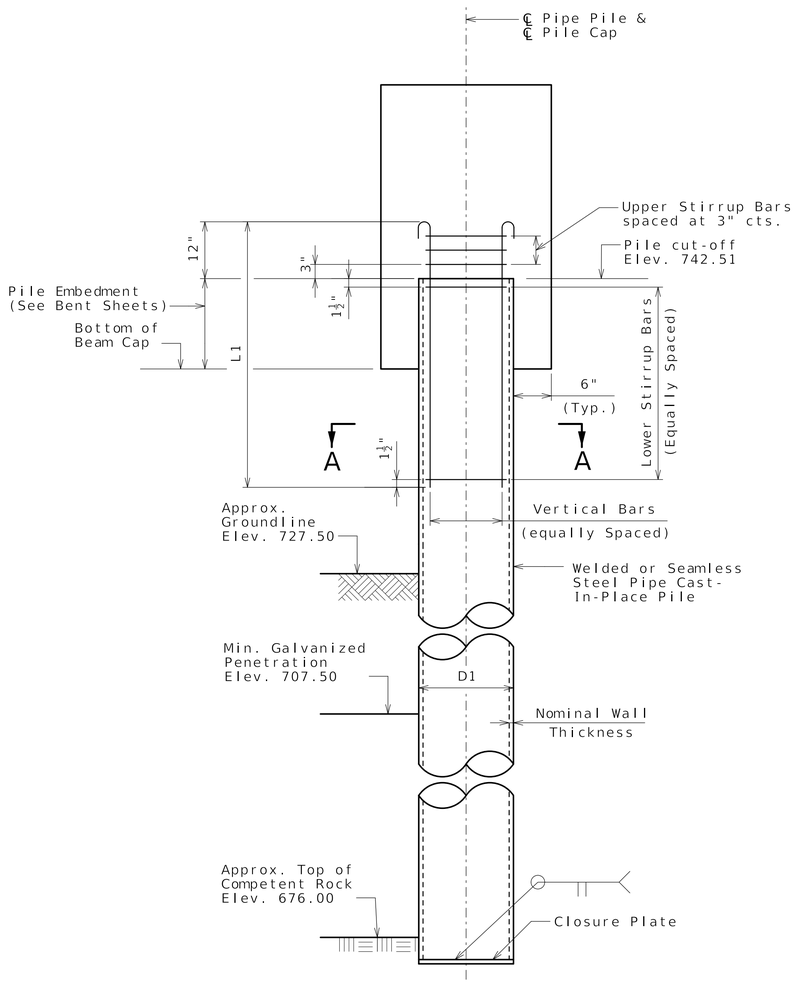


GALVANIZED CLOSED ENDED CAST-IN-PLACE (CECIP)
CONCRETE PILE
WITHOUT PILE POINT REINFORCEMENT

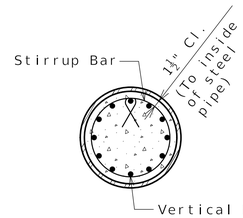


SECTION A-A

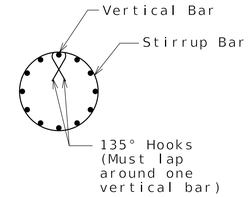


DETAIL OF SEISMIC
STIRRUP BAR

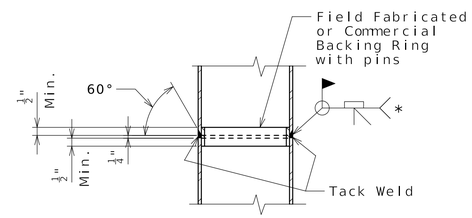


STEEL PIPE PILE SPLICE

* Galvanizing material shall be omitted or removed one inch clear of weld locations in accordance with Sec 702.

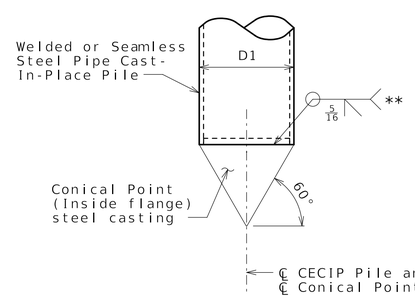


MANUFACTURED CONICAL PILE POINT

(Omit closure plate)

** If the conical pile point is not pre-beveled, place a 3/8" bevel at 40 degrees on the pipe.

| Galvanized Closed Ended Cast-In-Place (CECIP) Concrete Pile Data | |
|---|---|
| D1, CECIP Pile (O.D.) | 24" |
| Min. Nominal Wall Thickness | ½" |
| Pile Point Reinforcement | Conical |
| Vertical Bars | 12-#6-V200 |
| L1, Length of Vertical Bars | 7'-3" |
| Upper Stirrup Bars | 3-#4-P201 |
| Lower Stirrup Bars | 7-#4-P202 |

## Notes:

Welded or seamless steel shell (pipe) shall be ASTM A252 Modified Grade 3 (fy = 50,000 psi) with physical and chemical requirements that meet ASTM A572 Grade 50. Pipe certification and source material certification shall be required.

Concrete for cast-in-place pile shall be Class B-1.

Steel casting for conical pile point reinforcement shall be ASTM A148 Grade 90-60.

The minimum wall thickness of any spot or local area of any type shall not be more than 12.5% under the specified nominal wall thickness.

The contractor shall determine the pile wall thickness required to avoid damage from all driving activities, but wall thickness shall not be less than the minimum specified.

Splices of pipe for cast-in-place concrete pile shall be made watertight and to the full strength of the pipe above and below the splice to permit hard driving without damage. Pipe damaged during driving shall be replaced without cost to the state. Pipe sections used for splicing shall be at least 5 feet in length.

At the contractor's option, the hooks of vertical bars embedded in the beam cap may be oriented inward or outward.

Reinforcing steel for cast-in-place piles is included in the Bill of Reinforcing Steel.

For Foundation Data table, see General Notes & Foundation Data Sheet.

# INTERMEDIATE BENT NO. 2
# PIPE PILE DETAILS

Designed BK JAN 2026
Detailed PAC JAN 2026
Checked SDY MAR 2026

Note: This drawing is not to scale. Follow dimensions.



STATE OF MISSOURI
TYSON B. STEIN
NUMBER PE-2013004346
PROFESSIONAL ENGINEER

DATE PREPARED 7-APR-2026
ROUTE I-70 | STATE MO
DISTRICT BR | SHEET NO. BR12-09
COUNTY BOONE
JOB NUMBER JST0017
CONTRACT ID. 251203-D01
PROJECT NO. IS 70-2(128)
BRIDGE NO. A9825

| REV | DATE | DESCRIPTION |
|---|---|---|
| 0 | 041026 | RFC Submittal |

IF A SEAL IS PRESENT ON THIS SHEET IT HAS BEEN ELECTRONICALLY SEALED AND DATED.

MISSOURI HIGHWAYS AND TRANSPORTATION COMMISSION
105 WEST CAPITOL
JEFFERSON CITY, MO 65102
1-888-ASK-MODOT (1-888-275-6636)

IMPROVE I-70 ROCHEPORT TO COLUMBIA

PARSONS
530 MARYVILLE CENTRE DRIVE, SUITE 400
ST. LOUIS, MISSOURI 63141 - 314.434.2900

EMERY SAPPE & SONS, INC

MO STATE CERTIFICATE OF AUTHORITY #000479 ENGINEERING

REV. RevDesc

04/13/2026
Released for Construction

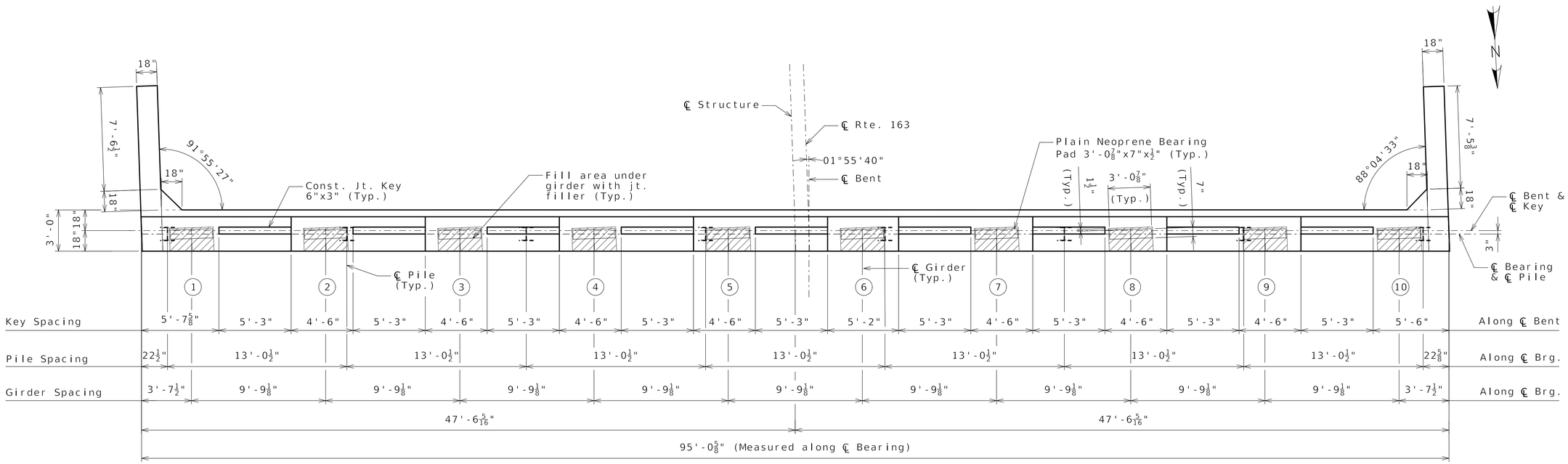


PLAN OF BEAM

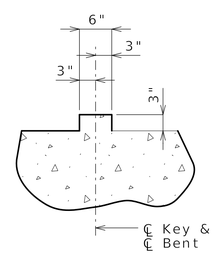


SECTION THRU KEY

## NOTES:

Work this sheet with End Bent 3 Details 02 & 03 Sheets.

All concrete in the end bent above top of beam and below top of slab shall be Class B-2.

For details of Vertical Drain, see Vertical Drain at End Bent sheet.

Strands at end of the girders shall be field bent or, if necessary, cut in field to maintain 1 1/2" minimum clearance to fill face of end bent.

Reinforcement shall be shifted to clear piles. U-Bars shall clear piles by at least 1 1/2".

The U-Bars and pairs of V-Bars shall be placed parallel to centerline of roadway.

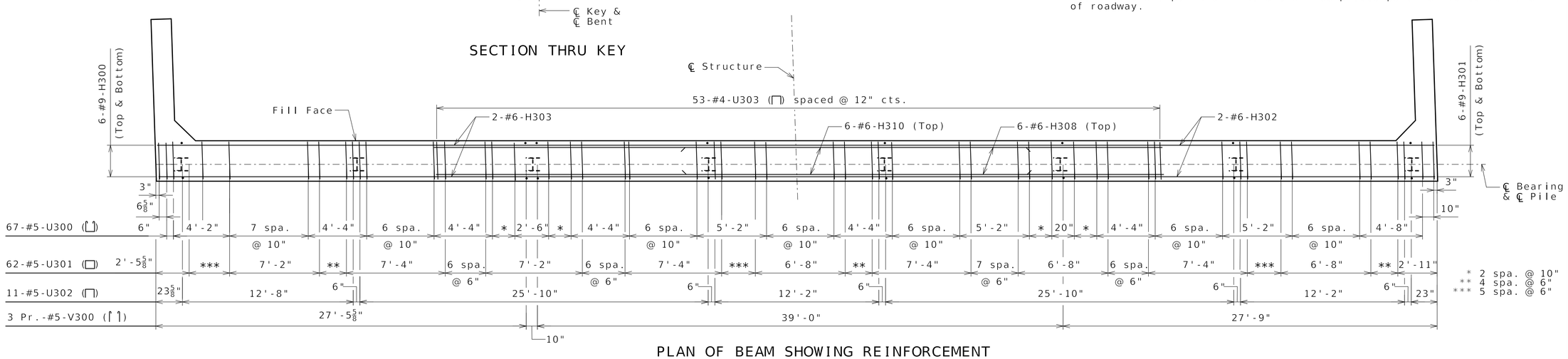


PLAN OF BEAM SHOWING REINFORCEMENT
(Construction Joint Keys and Beam Steps not shown for clarity)

# END BENT NO. 3 DETAILS 01

Designed BK JAN 2026
Detailed JDS JAN 2026
Checked BK FEB 2026

Note: This drawing is not to scale. Follow dimensions.



STATE OF MISSOURI
TYSON B. STEIN
NUMBER PE-2013004346
PROFESSIONAL ENGINEER

| | |
|---|---|
| DATE PREPARED | 11-APR-2026 |
| ROUTE | I-70 |
| STATE | MO |
| DISTRICT | BR |
| SHEET NO. | BR12-10 |
| COUNTY | BOONE |
| JOB NUMBER | JST0017 |
| CONTRACT ID. | 251203-D01 |
| PROJECT NO. | IS 70-2(128) |
| BRIDGE NO. | A9825 |

| REV | DATE | DESCRIPTION |
|---|---|---|
| 0 | 041026 | RFC Submittal |

IF A SEAL IS PRESENT ON THIS SHEET IT HAS BEEN ELECTRONICALLY SEALED AND DATED.

MISSOURI HIGHWAYS AND TRANSPORTATION COMMISSION
105 WEST CAPITOL
JEFFERSON CITY, MO 65102
1-888-ASK-MODOT (1-888-275-6636)

IMPROVE I-70 ROCHEPORT TO COLUMBIA

PARSONS
530 MARYVILLE CENTRE DRIVE, SUITE 400
ST. LOUIS, MISSOURI 63141 - 314.434.2800

EMERY SAPPS SONS, INC

MO STATE CERTIFICATE OF AUTHORITY #000479 ENGINEERING

REV. RevDesc

04/13/2026
Released for Construction

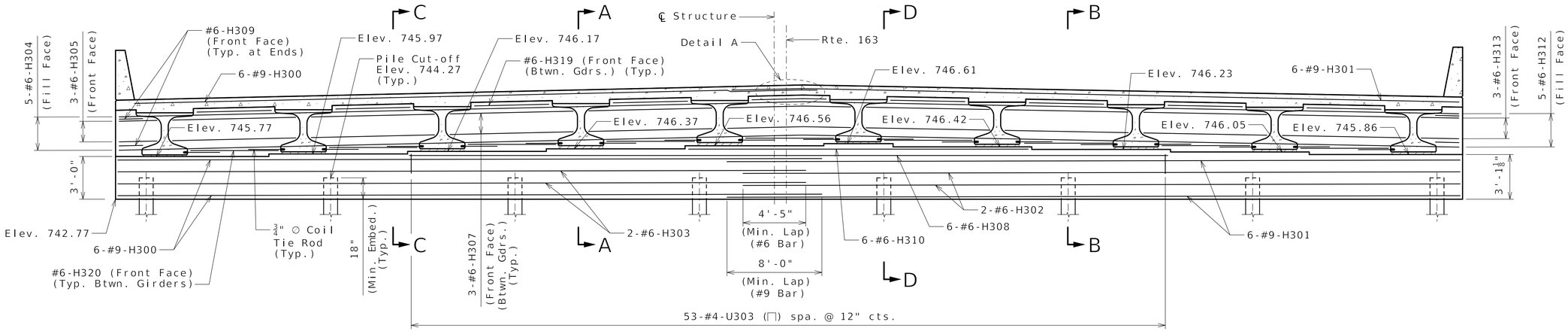


## SECTION NEAR END BENT

(Construction Joint Key and Vertical Reinforcement not shown for clarity)

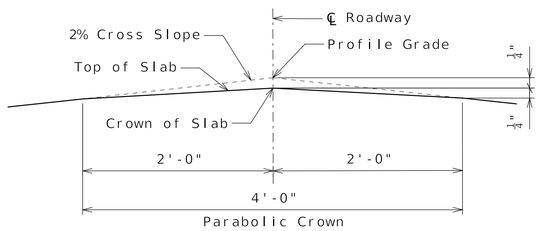


## DETAIL A

## Notes:

Work this sheet with End Bent 3 Details 01 and 03 sheets.

The U bars and pairs of V bars shall be placed parallel to centerline of roadway.

For reinforcement of the Type D Barrier, see Barrier Details 02.

The #6-F300 and #6-F302 bars shall be bent in the field to clear girders.

All concrete in the end bent above top of beam and below top of slab shall be Class B-2.

Strands at the end of the girders shall be field bent or, if necessary, cut in field to maintain 1½" minimum clearance to fill face of end bent.

For location of coil tie rods and #5-H311 (strand tie bar), see Prestressed Concrete NU Girder detail sheet.

For details of bridge approach slab, see Bridge Approach Slab (Major) sheet.

#4-U303 to be placed with #6-H308 or #6-H310, whichever is top longitudinal bar at the location.

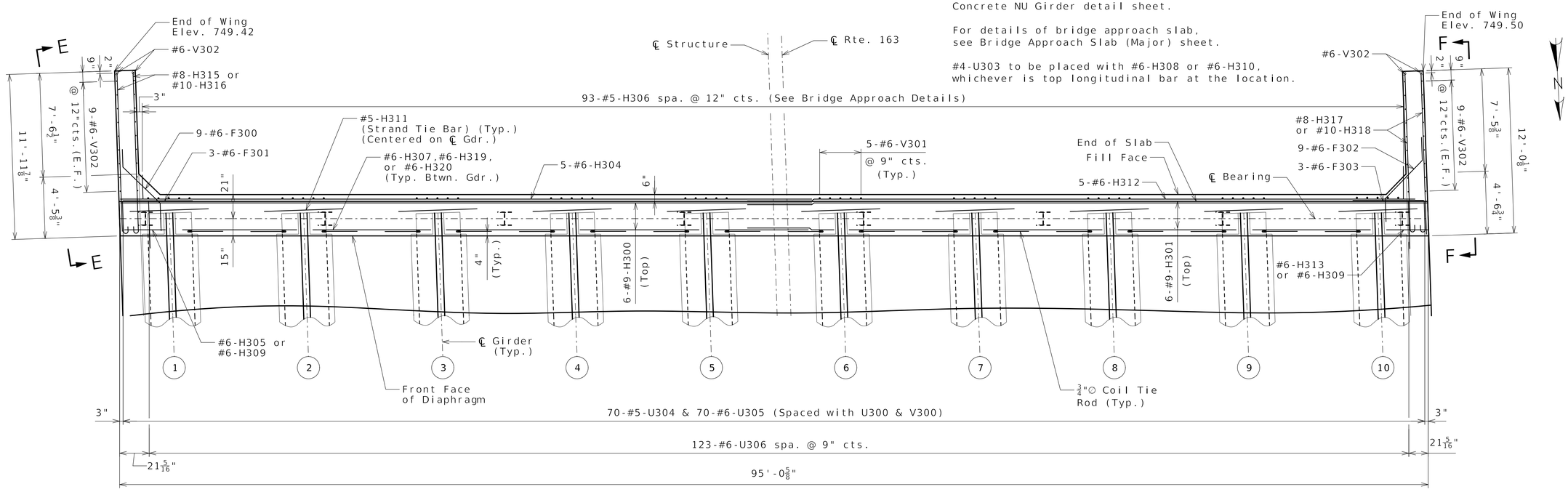


## PART PLAN SHOWING REINFORCEMENT

# END BENT NO. 3 DETAILS 02

Designed BK JAN 2026
Detailed PAC JAN 2026
Checked JDS MAR 2026

Note: This drawing is not to scale. Follow dimensions.

Sheet No. 11 of 37

STATE OF MISSOURI — TYSON B. STEIN — NUMBER PE-2013004346 — PROFESSIONAL ENGINEER

| | |
|---|---|
| DATE PREPARED | 11-APR-2026 |
| ROUTE | I-70 |
| STATE | MO |
| DISTRICT | BR |
| SHEET NO. | BR12-11 |
| COUNTY | BOONE |
| JOB NUMBER | JST0017 |
| CONTRACT ID. | 251203-D01 |
| PROJECT NO. | IS 70-2(128) |
| BRIDGE NO. | A9825 |

| REV | DATE | DESCRIPTION |
|---|---|---|
| 0 | 041026 | RFC Submittal |

IF A SEAL IS PRESENT ON THIS SHEET IT HAS BEEN ELECTRONICALLY SEALED AND DATED.

MISSOURI HIGHWAYS AND TRANSPORTATION COMMISSION
105 WEST CAPITOL
JEFFERSON CITY, MO 65102
1-888-ASK-MODOT (1-888-275-6636)

IMPROVE I-70 ROCHEPORT TO COLUMBIA

PARSONS
530 MARYVILLE CENTRE DRIVE, SUITE 400
ST. LOUIS, MISSOURI 63141 - 314.434.2800

EMERY SAPPS & SONS, INC

MO STATE CERTIFICATE OF AUTHORITY #000479 ENGINEERING

REV. RevDesc

04/13/2026
Released for Construction

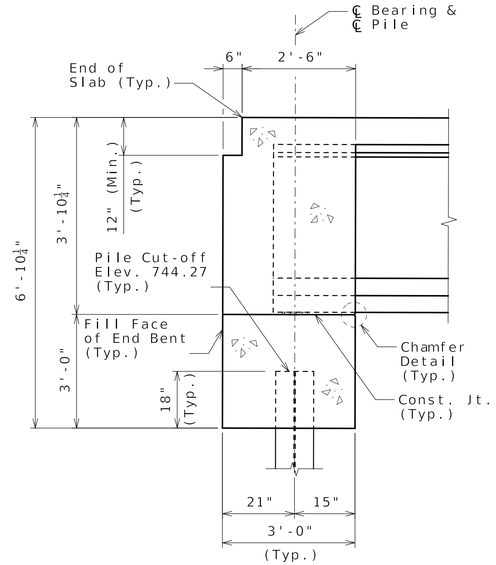


TYPICAL SECTION
(Near East Gutter Line)

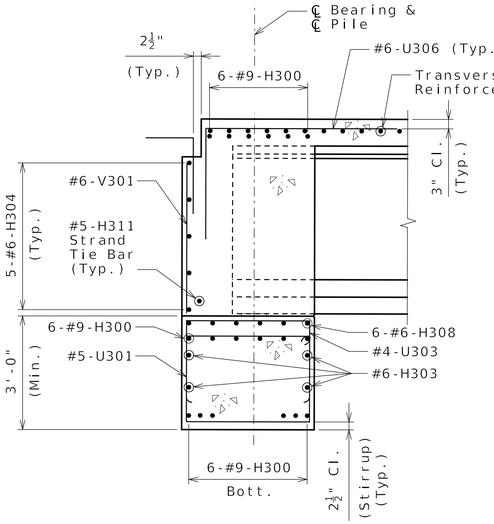


SECTION A-A

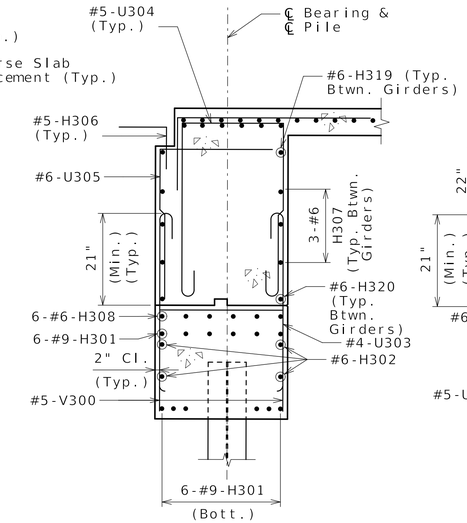


SECTION B-B

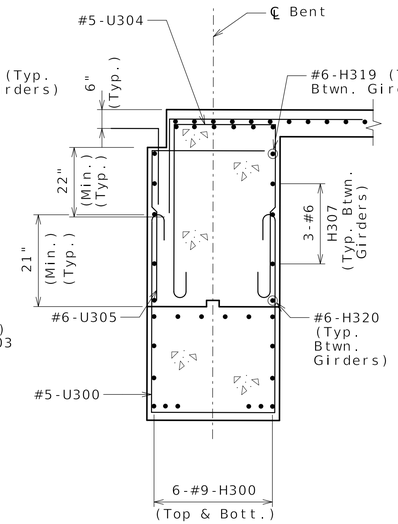


SECTION C-C

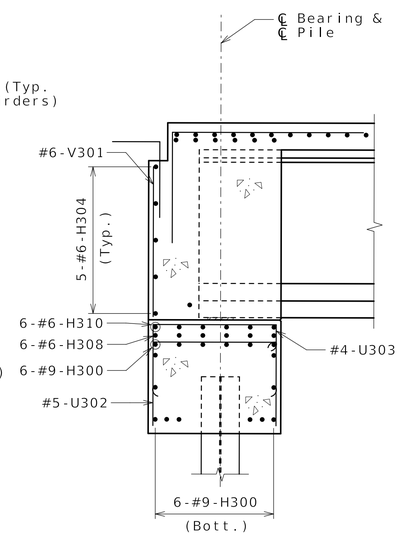


SECTION D-D

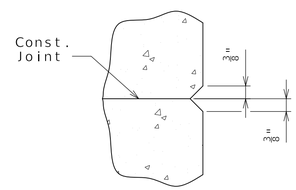


CHAMFER DETAIL

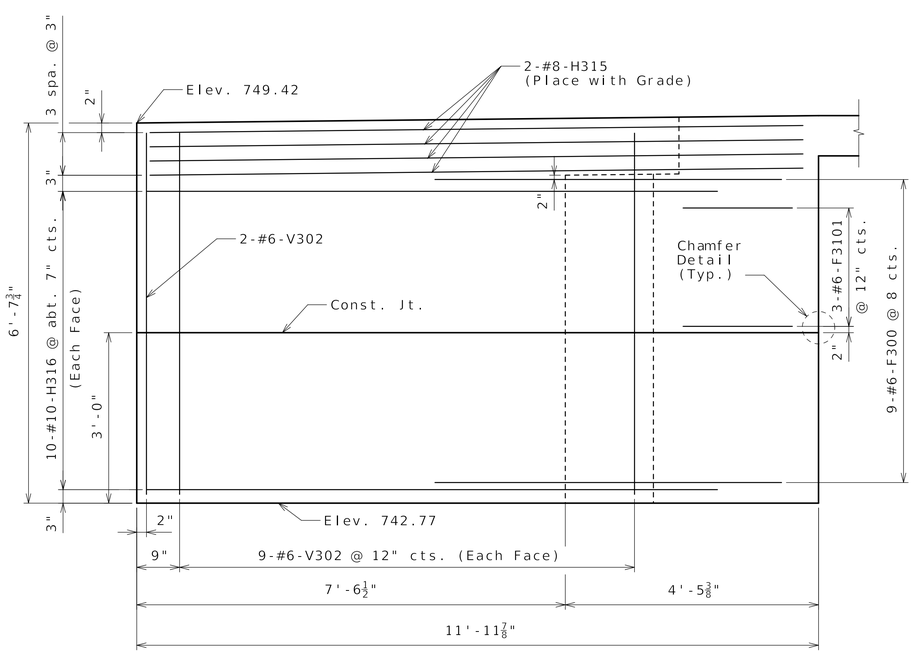


ELEVATION E-E

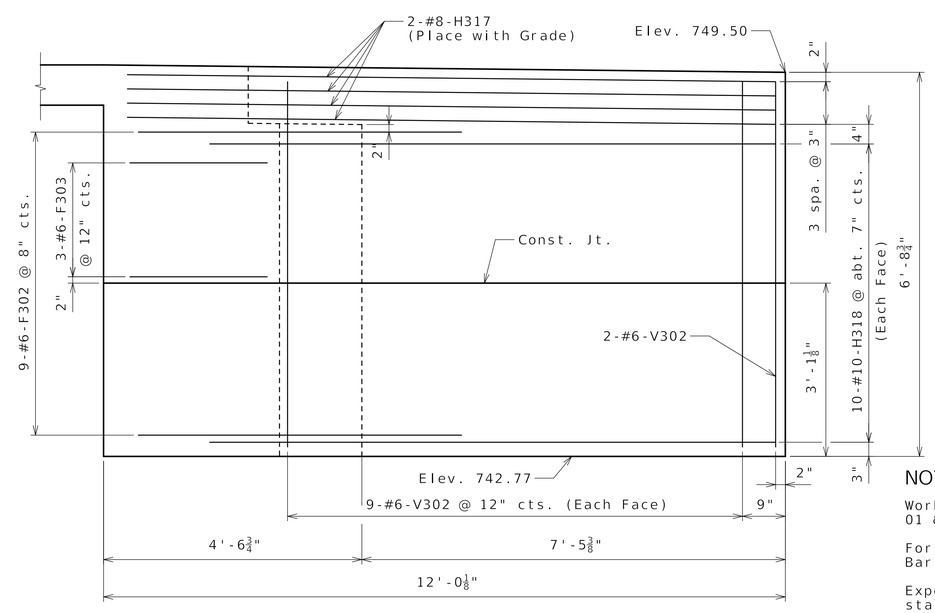


ELEVATION F-F

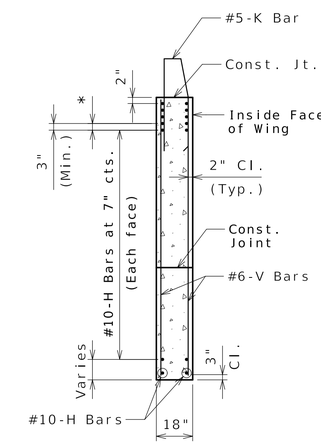


TYPICAL SECTION
THRU WING

* #8-H Bars at 3" cts.
(Each face)(Place with grade)

NOTES:

Work this sheet with End Bent 3 Details 01 & 02 Sheets.

For reinforcement of the barrier, see Barrier, Type D Details 02 sheet.

Exposed faces of wingwalls shall be stained and sealed with H&C Solid Stain and Sealer. Color: Cemented Deal.

Contractor shall utilize smooth, well-oiled forms to minimize honey-combing.

# END BENT NO. 3
# DETAILS 03

Designed BK JAN 2026
Detailed PAC JAN 2026
Checked JDS MAR 2026

Note: This drawing is not to scale. Follow dimensions.



STATE OF MISSOURI
TYSON B. STEIN
NUMBER PE-2013004346
PROFESSIONAL ENGINEER

| DATE PREPARED | |
|---|---|
| 11-APR-2026 | |
| ROUTE | STATE |
| I-70 | MO |
| DISTRICT | SHEET NO. |
| BR | BR12-12 |
| COUNTY | |
| BOONE | |
| JOB NUMBER | |
| JST0017 | |
| CONTRACT ID. | |
| 251203-D01 | |
| PROJECT NO. | |
| IS 70-2(128) | |
| BRIDGE NO. | |
| A9825 | |

| REV | DATE | DESCRIPTION |
|---|---|---|
| 0 | 041026 | RFC Submittal |

IF A SEAL IS PRESENT ON THIS SHEET IT HAS BEEN ELECTRONICALLY SEALED AND DATED.

MISSOURI HIGHWAYS AND TRANSPORTATION COMMISSION
105 WEST CAPITOL
JEFFERSON CITY, MO 65102
1-888-ASK-MODOT (1-888-275-6636)

IMPROVE I-70 ROCHEPORT TO COLUMBIA

PARSONS
530 MARYVILLE CENTRE DRIVE, SUITE 400
ST. LOUIS, MISSOURI 63141 - 314.434.2800

EMERY SAPPS & SONS, INC

MO STATE CERTIFICATE OF AUTHORITY #000479 ENGINEERING

REV. RevDesc

04/13/2026
Released for Construction

(1) Fabricator shall apply a bond breaker to this region excluding where joint filler will be applied.

(2) Outer strands tensioned to 2.02 kips/strand and inner strands to 8 kips/strand. Placed symmetrical about ℄ Girder. May be moved laterally in pairs.

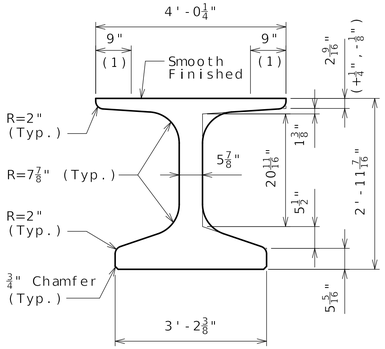


DIMENSIONS

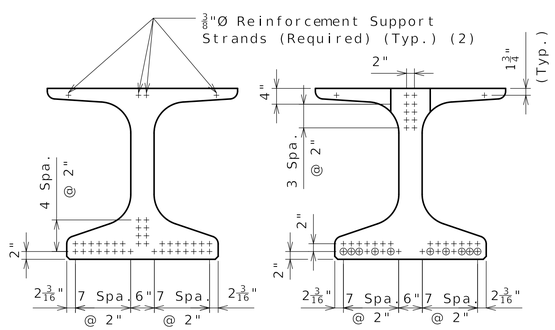


℄ GIRDER END OF GIRDER

STRAND ARRANGEMENT

+ Indicates prestressing strand.

○ Indicates cut & shop bend with 3'-0" projection.

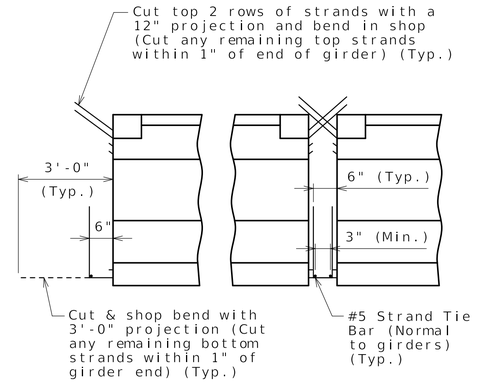


END BENT INTERMEDIATE BENT

STRANDS AT GIRDER ENDS

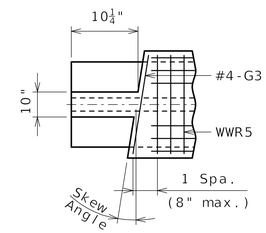


INTERIOR GIRDER AT INT. BENTS

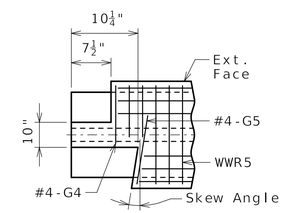


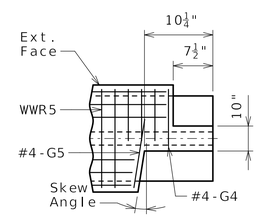


LEFT EXTERIOR GIRDER AT INTERMEDIATE BENT

Rotate 180° for right ext.

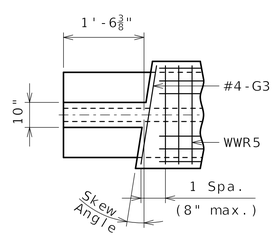


INTERIOR GIRDER & EXTERIOR GIRDER AT END BENT

TOP FLANGE BLOCKOUT

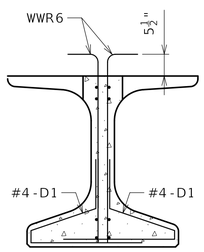


SECTION A-A

Strands not shown for clarity.

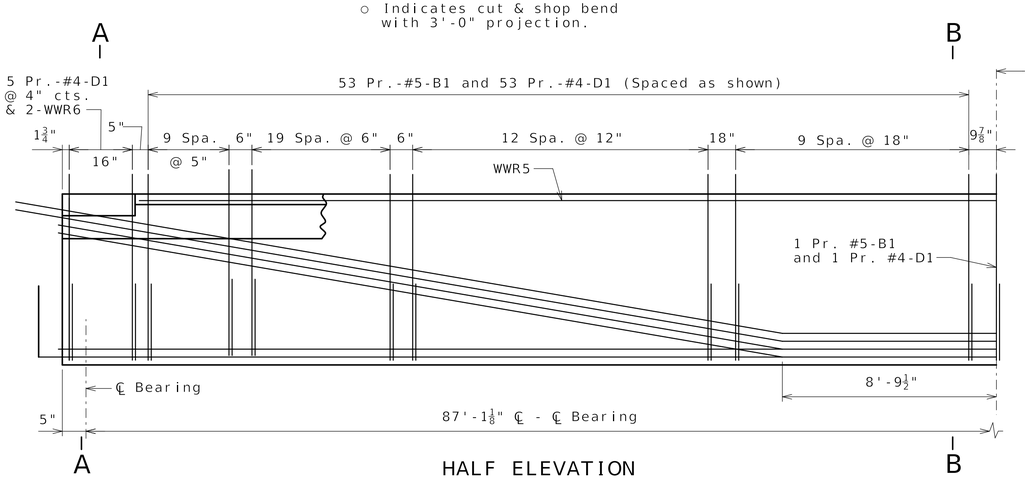


HALF ELEVATION

Reinforcement support strands not shown for clarity.

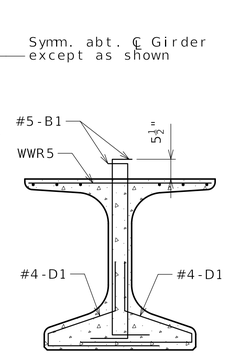


SECTION B-B

Strands not shown for clarity.

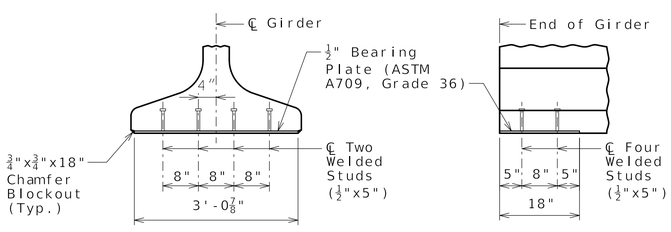


END VIEW SIDE VIEW

BEARING PLATE

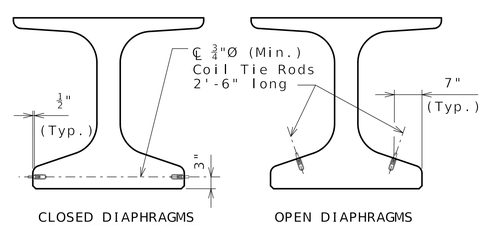


CLOSED DIAPHRAGMS AND INTEGRAL BENTS OPEN DIAPHRAGMS

COIL TIES

Exclude coil tie at exterior face of exterior girders except at integral end bents.

Bill of Reinforcing Steel - Each Girder

| No. | Size/ Mark | Length | Shape |
|---|---|---|---|
| 214 | 5 B1 | 4'-6½" | 11S |
| 234 | 4 D1 | 4'-0" | 9S |
| 2 | 4 G3 | 3'-9¼" | 20 |
| 2 | 4 G4 | 2'-3" | 20 |
| 2 | 4 G5 | 2'-6" | 20 |

Bending Diagrams

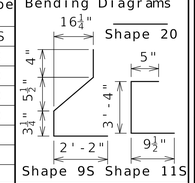


Welded Wire Reinforcement - Each Girder

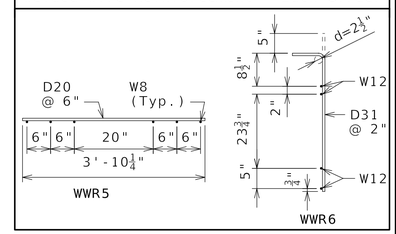


All dimensions are out to out.

Hooks and bends shall be in accordance with the CRSI Manual of Standard Practice for Detailing Reinforced Concrete Structures, Stirrup and Tie Dimensions.

Actual bar lengths are measured along centerline of bar to the nearest inch.

Minimum clearance to reinforcing shall be one inch.

All bar reinforcement shall be ASTM A615 or A706 Grade 60.

The two D1 bars may be furnished as one bar at the fabricator's option.

All B1 bars shall be epoxy coated.

G4 and G5 not required for interior girders. G3 not required for exterior girders of intermediate spans. Half no. of G3, G4 and G5 not required for ext. girders of end spans.

## General Notes:

Concrete for prestressed girders shall be Class A-1 with f'c = 9000 psi and f'ci = 7500 psi.

Use 38 strands, 0.6"Ø Grade 270, with an initial prestress force of 1669.82 kips.

Pretensioned members shall be in accordance with Sec 1029.

Fabricator shall be responsible for location and design of lifting devices.

Exterior and interior girders are the same except: coil ties, top flange blockout, application of bond breaker and coil inserts for slab drains.

The contractor shall provide bracing necessary for lateral and torsional stability of the girders during construction of the concrete slab and remove the bracing after the slab has attained 75% design strength. Contractor shall not drill holes in the girders.

For Girder Camber Diagram, see Slab Elevation, Haunching and Girder Camber sheet.

For location of coil inserts at slab drains, see Slab Drain Details sheet.

For location of coil ties at concrete diaphragms and integral bents, see End Bent No,1 Details 02 and End Bent No.3 Details 02 sheets.

# PRESTRESSED CONCRETE NU GIRDER DETAILS SPAN (1-2)

Designed TBS JAN 2026
Detailed PAC JAN 2026
Checked NAK APR 2026

Note: This drawing is not to scale. Follow dimensions.



STATE OF MISSOURI
TYSON B. STEIN
NUMBER PE-2013004346
PROFESSIONAL ENGINEER

DATE PREPARED 11-APR-2026
ROUTE I-70 STATE MO
DISTRICT BR SHEET NO. BR12-15
COUNTY BOONE
JOB NUMBER JST0017
CONTRACT ID. 251203-D01
PROJECT NO. IS 70-2(128)
BRIDGE NO. A9825

| REV | DATE | DESCRIPTION |
|---|---|---|
| 0 | 041026 | RFC Submittal |

MISSOURI HIGHWAYS AND TRANSPORTATION COMMISSION
105 WEST CAPITOL
JEFFERSON CITY, MO 65102
1-888-ASK-MODOT (1-888-275-6636)

IMPROVE I-70 ROCHEPORT TO COLUMBIA

PARSONS
530 MARYVILLE CENTRE DRIVE, SUITE 400
ST. LOUIS, MISSOURI 63141 - 314.434.2800

EMERY SAPPS & SONS, INC

MO STATE CERTIFICATE OF AUTHORITY #000479 ENGINEERING

IF A SEAL IS PRESENT ON THIS SHEET IT HAS BEEN ELECTRONICALLY SEALED AND DATED.

REV. RevDesc

04/13/2026
Released for Construction

(1) Fabricator shall apply a bond breaker to this region excluding where joint filler will be applied.

(2) Outer strands tensioned to 2.02 kips/strand and inner strands to 8 kips/strand. Placed symmetrical about ℄ Girder. May be moved laterally in pairs.

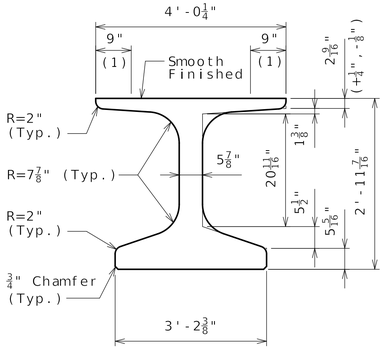


DIMENSIONS

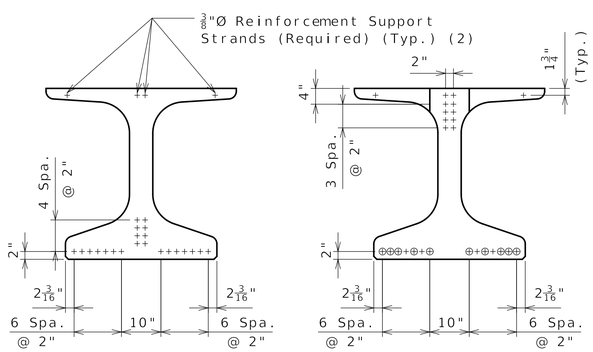


℄ GIRDER END OF GIRDER

STRAND ARRANGEMENT

+ Indicates prestressing strand.

○ Indicates cut & shop bend with 3'-0" projection.

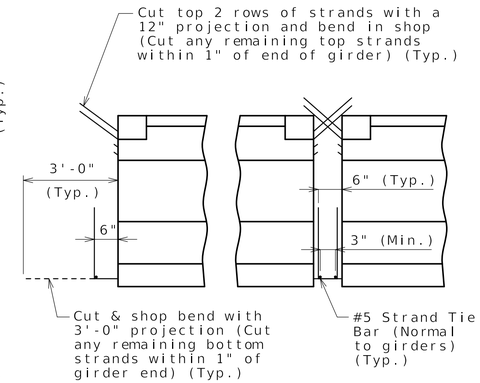


END BENT INTERMEDIATE BENT

STRANDS AT GIRDER ENDS

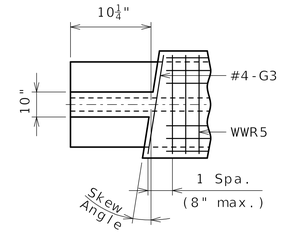


INTERIOR GIRDER AT INT. BENTS

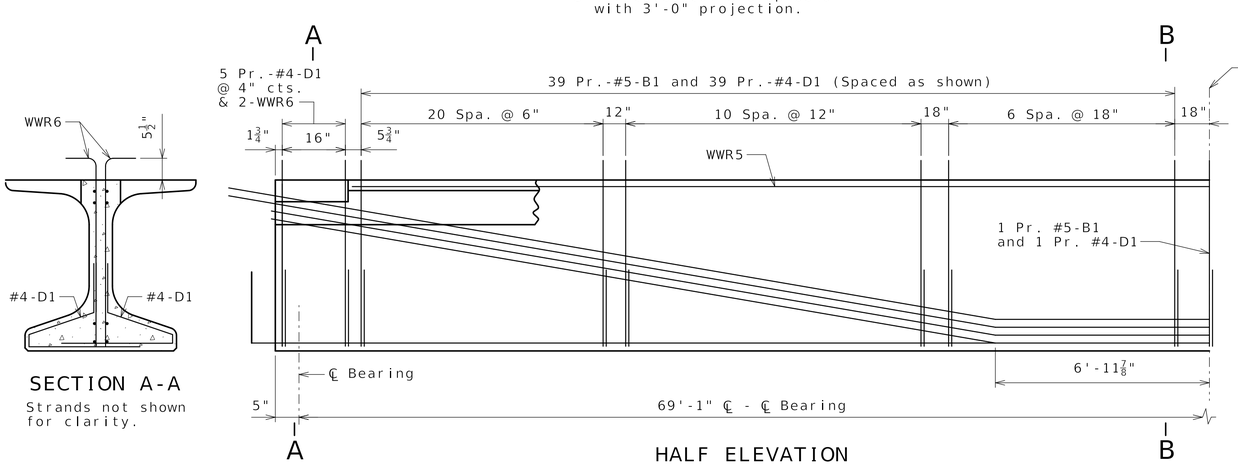


SECTION A-A

Strands not shown for clarity.

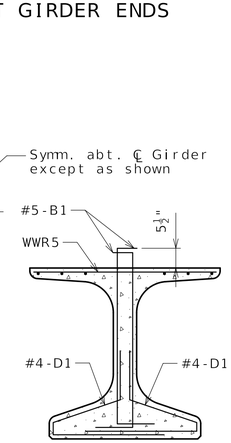


SECTION B-B

Strands not shown for clarity.

HALF ELEVATION

Reinforcement support strands not shown for clarity.

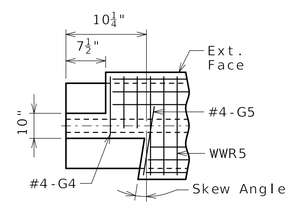


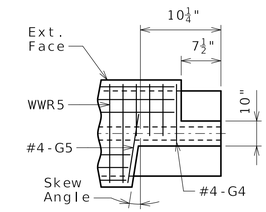


LEFT EXTERIOR GIRDER AT INTERMEDIATE BENT

Rotate 180° for right ext.

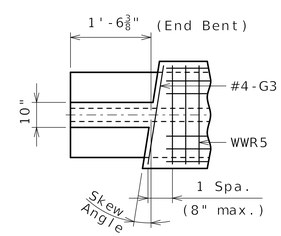


INTERIOR GIRDER & EXTERIOR GIRDER AT END BENT

TOP FLANGE BLOCKOUT

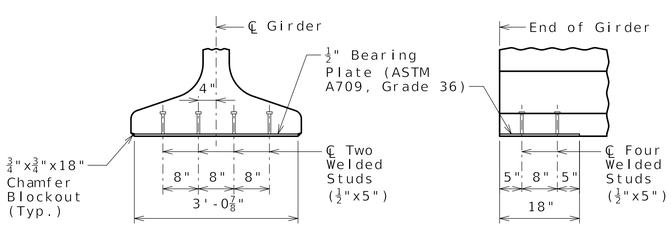


END VIEW SIDE VIEW

BEARING PLATE

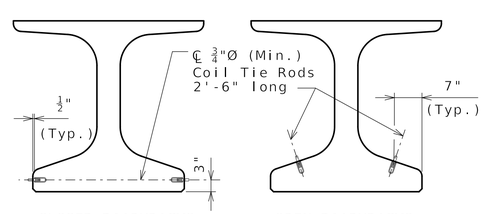


CLOSED DIAPHRAGMS AND INTEGRAL BENTS OPEN DIAPHRAGMS

COIL TIES

Exclude coil tie at exterior face of exterior girders except at integral end bents.

Bill of Reinforcing Steel - Each Girder

| No. | Size/ Mark | Length | Shape |
|---|---|---|---|
| 158 | 5 B1 | 4'-6½" | 11S |
| 178 | 4 D1 | 4'-0" | 9S |
| 2 | 4 G3 | 3'-9¾" | 20 |
| 2 | 4 G4 | 2'-3" | 20 |
| 2 | 4 G5 | 2'-6" | 20 |

Bending Diagrams

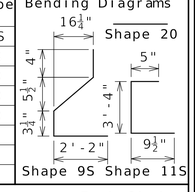


Welded Wire Reinforcement - Each Girder

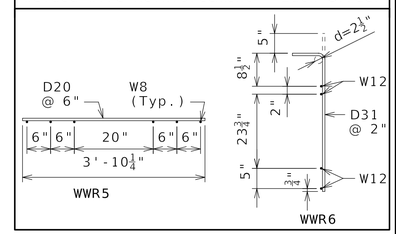


All dimensions are out to out.

Hooks and bends shall be in accordance with the CRSI Manual of Standard Practice for Detailing Reinforced Concrete Structures, Stirrup and Tie Dimensions.

Actual bar lengths are measured along centerline of bar to the nearest inch.

Minimum clearance to reinforcing shall be one inch.

All bar reinforcement shall be ASTM A615 or A706 Grade 60.

The two D1 bars may be furnished as one bar at the fabricator's option.

All B1 bars shall be epoxy coated.

G4 and G5 not required for interior girders. G3 not required for exterior girders of intermediate spans. Half no. of G3, G4 and G5 not required for ext. girders of end spans.

## General Notes:

Concrete for prestressed girders shall be Class A-1 with f'c = 9000 psi and f'ci = 7500 psi.

Use 22 strands, 0.6"Ø Grade 270, with an initial prestress force of 966.74 kips.

Pretensioned members shall be in accordance with Sec 1029.

Fabricator shall be responsible for location and design of lifting devices.

Exterior and interior girders are the same except: coil ties, top flange blockout, application of bond breaker and coil inserts for slab drains.

The contractor shall provide bracing necessary for lateral and torsional stability of the girders during construction of the concrete slab and remove the bracing after the slab has attained 75% design strength. Contractor shall not drill holes in the girders.

For Girder Camber Diagram, see Slab Elevation, Haunching, and Girder Camber sheet.

For location of coil inserts at slab drains, see Slab Drain Details sheet.

For location of coil ties at concrete diaphragms and integral bents, see End Bent No. 1 Details 02 and End Bent No. 3 Details 02 sheets.

For details of the sign support inserts into Girder 10, see Sign Support Details 01 and Sign Support Details 02 sheets.

# PRESTRESSED CONCRETE NU GIRDER DETAILS SPAN (2-3)

Designed BK JAN 2026
Detailed MLS JAN 2026
Checked NAK APR 2026

Note: This drawing is not to scale. Follow dimensions.



STATE OF MISSOURI
TYSON B. STEIN
NUMBER PE-2013004346
PROFESSIONAL ENGINEER

DATE PREPARED 11-APR-2026

| ROUTE | STATE |
|---|---|
| I-70 | MO |
| DISTRICT | SHEET NO. |
| BR | BR12-16 |

COUNTY BOONE
JOB NUMBER JST0017
CONTRACT ID. 251203-D01
PROJECT NO. IS 70-2(128)
BRIDGE NO. A9825

| REV | DATE | DESCRIPTION |
|---|---|---|
| 0 | 041026 | RFC Submittal |

MISSOURI HIGHWAYS AND TRANSPORTATION COMMISSION
105 WEST CAPITOL
JEFFERSON CITY, MO 65102
1-888-ASK-MODOT (1-888-275-6636)

IMPROVE I-70 ROCHEPORT TO COLUMBIA

PARSONS
530 MARYVILLE CENTRE DRIVE, SUITE 400
ST. LOUIS, MISSOURI 63141 - 314.434.2800

EMERY SAPP & SONS, INC

MO STATE CERTIFICATE OF AUTHORITY #000479 ENGINEERING

IF A SEAL IS PRESENT ON THIS SHEET IT HAS BEEN ELECTRONICALLY SEALED AND DATED.

REV. RevDesc

04/13/2026
Released for Construction

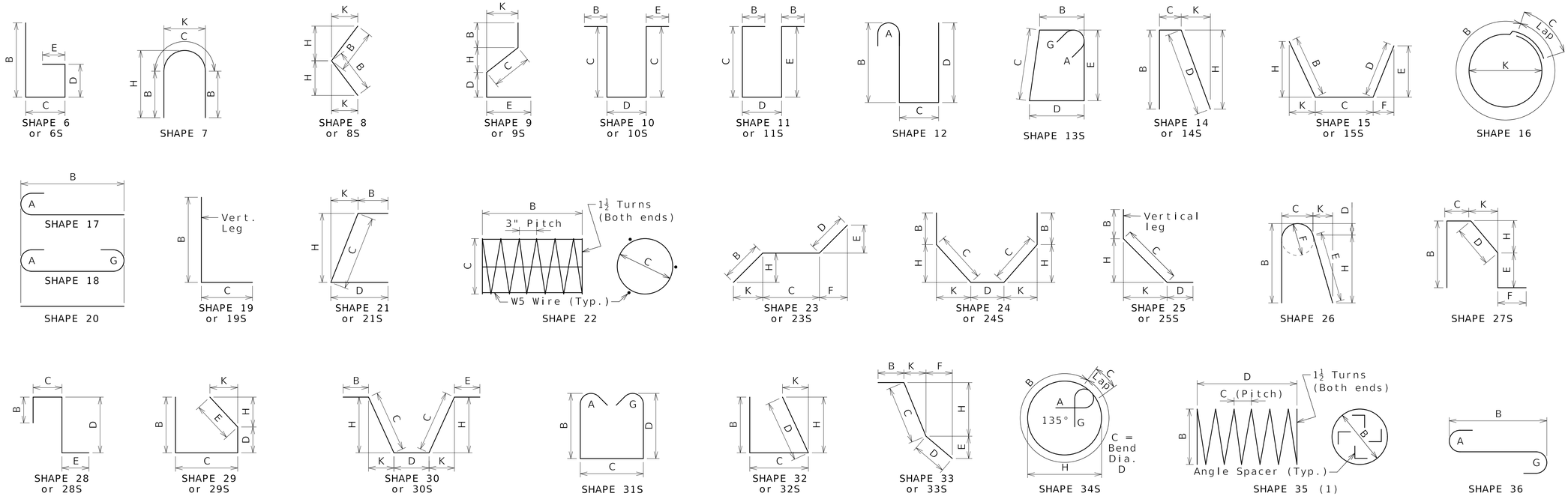


## Finished Bend Diameters D and Hook Dimensions

### Standard Pin Bend Shapes

| Size | Case | D | A or G 90° | A or G 180° | J 180° |
|---|---|---|---|---|---|
| #4 | 1 | 3" | 8" | 6" | 4" |
| #5 | 1 | 3¾" | 10" | 7" | 5" |
| #6 | 1 | 4½" | 12" | 8¼" | 6" |
| #7 | 2 | 5¼" | 14" | 9¾" | 7" |
| | 3 | 7" | 15" | 11½" | 8¾" |
| #8 | 2 | 6" | 16" | 11" | 8" |
| | 3 | 8" | 17" | 13¼" | 10" |
| #9 | 1 | 9½" | 19½" | 15½" | 11¾" |
| #10 | 1 | 10¾" | 22" | 17½" | 13¼" |
| #11 | 1 | 12" | 24½" | 19½" | 14⅞" |
| #14 | 1 | 18¼" | 31¼" | 27½" | 21⅜" |
| #18 | 1 | 24" | 41½" | 36¼" | 28½" |

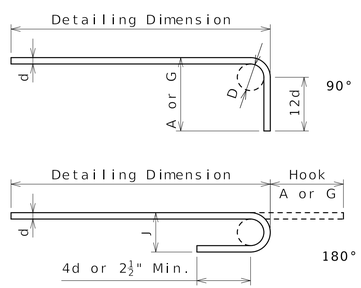


### Stirrup Pin Bend Shapes (S)

| Size | Case | D | A or G 90° | A or G 135° | A or G 180° | H 135° | J 180° |
|---|---|---|---|---|---|---|---|
| #4 | 2 | 2" | 4½" | 4½" | 5" | 2⅞" | 3" |
| | 3 | 3" | 5" | 5¼" | 6" | 3" | 4" |
| #5 | 2 | 2½" | 5¾" | 5¾" | 5¾" | 3⅝" | 3¾" |
| | 3 | 3¾" | 6¼" | 6½" | 7" | 3⅞" | 5" |
| #6 | 1 | 4½" | 12" | 7¾" | 8¼" | 4⅝" | 6" |

Applicable for all grades of steel.

Case 1 applies to all reinforcement. Case 2 applies to all reinforcement except for galvanized bars. Case 3 applies to galvanized bars only.

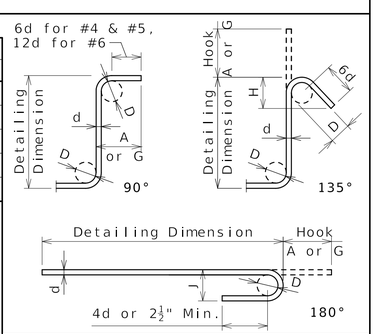


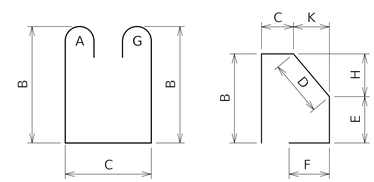


BENDING DIAGRAMS

All dimensions are out to out.

Shapes ending with an S shall be bent in accordance with stirrup pin bend shapes.

Unless otherwise noted, finished bending diameter D is the same for all bends of a shape.

(1) Shall be a deformed or plain spiral bar or wire.

Four angle or channel spacers are required for each column spiral. Spacers are to be placed on inside of spirals. Length and weight of column spirals do not include splices or spacers.

BENDING DIAGRAMS

Designed TBS JAN 2026
Detailed MLS JAN 2026
Checked NAK APR 2026

Note: This drawing is not to scale. Follow dimensions.



STATE OF MISSOURI
TYSON B. STEIN
NUMBER PE-2013004346
PROFESSIONAL ENGINEER

| | |
|---|---|
| DATE PREPARED | 6-APR-2026 |
| ROUTE | I-70 |
| STATE | MO |
| DISTRICT | BR |
| SHEET NO. | BR12-33 |
| COUNTY | BOONE |
| JOB NUMBER | JST0017 |
| CONTRACT ID. | 251203-D01 |
| PROJECT NO. | IS 70-2(128) |
| BRIDGE NO. | A9825 |

| REV | DATE | DESCRIPTION |
|---|---|---|
| 0 | 041026 | RFC Submittal |

IF A SEAL IS PRESENT ON THIS SHEET IT HAS BEEN ELECTRONICALLY SEALED AND DATED.

MISSOURI HIGHWAYS AND TRANSPORTATION COMMISSION
105 WEST CAPITOL
JEFFERSON CITY, MO 65102
1-888-ASK-MODOT (1-888-275-6636)

IMPROVE I-70 ROCHEPORT TO COLUMBIA

PARSONS
530 MARYVILLE CENTRE DRIVE, SUITE 400
ST. LOUIS, MISSOURI 63141 - 314.434.2800

EMERY SAPP & SONS, INC

MO STATE CERTIFICATE OF AUTHORITY #000479 ENGINEERING

REV. RevDesc

04/13/2026
Released for Construction

## Bill of Reinforcing Steel

| No. Req. | Size / Mark | | Location | Codes C | SH | V | Dimensions B ft | B in. | C ft | C in. | D ft | D in. | E ft | E in. | F ft | F in. | H ft | H in. | K ft | K in. | Nom. Length ft | Nom. Length in. | Actual Length ft | Actual Length in. | Weight lb |
|---|---|---|---|---|---|---|---|---|---|---|---|---|---|---|---|---|---|---|---|---|---|---|---|---|---|
| | | | END BENT 1 | | | | | | | | | | | | | | | | | | | | | | |
| 9 | 6 | F100 | WINGWALL | E | 23 | | 1 | 8.000 | 4 | 9.000 | 1 | 8.000 | 1 | 0.750 | 1 | 3.375 | 1 | 3.000 | 1 | 1.250 | 8 | 1 | 8 | 0 | 108 |
| 3 | 6 | F101 | CORNER | E | 21 | | | | 5 | 5.000 | 2 | 7.000 | | | | | | | | | 8 | 0 | 7 | 9 | 35 |
| 9 | 6 | F102 | WINGWALL | E | 23 | | 1 | 8.000 | 3 | 9.000 | 1 | 8.000 | 1 | 2.250 | 1 | 2.000 | 1 | 2.375 | 1 | 1.875 | 7 | 1 | 7 | 0 | 95 |
| 3 | 6 | F103 | CORNER | E | 23 | | 2 | 7.000 | 4 | 10.000 | | | | | | | 2 | 6.875 | | 1.000 | 7 | 5 | 7 | 3 | 33 |
| 18 | 9 | H100 | BEAM/DIAPH | E | 20 | | 51 | 8.000 | | | | | | | | | | | | | 51 | 8 | 51 | 8 | 3162 |
| 18 | 9 | H101 | BEAM/DIAPH | E | 20 | | 51 | 8.000 | | | | | | | | | | | | | 51 | 8 | 51 | 8 | 3162 |
| 4 | 6 | H102 | BEAM | E | 20 | | 49 | 10.000 | | | | | | | | | | | | | 49 | 10 | 49 | 10 | 299 |
| 4 | 6 | H103 | BEAM | E | 20 | | 49 | 10.000 | | | | | | | | | | | | | 49 | 10 | 49 | 10 | 299 |
| 5 | 6 | H104 | DIAPH | E | 20 | | 49 | 10.000 | | | | | | | | | | | | | 49 | 10 | 49 | 10 | 374 |
| 3 | 6 | H105 | DIAPH | E | 20 | | 2 | 7.000 | | | | | | | | | | | | | 2 | 7 | 2 | 7 | 12 |
| 93 | 5 | H106 | DIAPH | E | 19 | | 2 | 0.000 | 1 | 3.000 | | | | | | | | | | | 3 | 3 | 3 | 1 | 299 |
| 27 | 6 | H107 | DIAPH | E | 20 | | 8 | 8.000 | | | | | | | | | | | | | 8 | 8 | 8 | 8 | 351 |
| 6 | 6 | H108 | BEAM | E | 20 | | 53 | 8.000 | | | | | | | | | | | | | 53 | 8 | 53 | 8 | 484 |
| 4 | 6 | H109 | DIAPH | E | 20 | | 1 | 11.000 | | | | | | | | | | | | | 1 | 11 | 1 | 11 | 12 |
| 6 | 6 | H110 | BEAM | E | 20 | | 14 | 8.000 | | | | | | | | | | | | | 14 | 8 | 14 | 8 | 132 |
| 10 | 5 | H111 | STRAND TIE | E | 20 | | 5 | 9.000 | | | | | | | | | | | | | 5 | 9 | 5 | 9 | 60 |
| 5 | 6 | H112 | DIAPH | E | 20 | | 49 | 10.000 | | | | | | | | | | | | | 49 | 10 | 49 | 10 | 374 |
| 3 | 6 | H113 | DIAPH | E | 20 | | 2 | 4.000 | | | | | | | | | | | | | 2 | 4 | 2 | 4 | 11 |
| | | H114 | NOT USED | | | | | | | | | | | | | | | | | | | | | | |
| 8 | 8 | H115 | WINGWALL | E | 20 | | 11 | 9.000 | | | | | | | | | | | | | 11 | 9 | 11 | 9 | 251 |
| 20 | 10 | H116 | WINGWALL | E | 17 | | 11 | 9.000 | | | | | | | | | | | | | 13 | 3 | 13 | 3 | 1140 |
| 8 | 8 | H117 | WINGWALL | E | 20 | | 11 | 5.000 | | | | | | | | | | | | | 11 | 5 | 11 | 5 | 244 |
| 20 | 10 | H118 | WINGWALL | E | 17 | | 11 | 5.000 | | | | | | | | | | | | | 12 | 11 | 12 | 11 | 1112 |
| 9 | 6 | H119 | DIAPH | E | 20 | | 5 | 3.000 | | | | | | | | | | | | | 5 | 3 | 5 | 3 | 71 |
| 9 | 6 | H210 | DIAPH | E | 20 | | 6 | 0.000 | | | | | | | | | | | | | 6 | 0 | 6 | 0 | 81 |
| 64 | 5 | U100 | BEAM | E | 37S | | 5 | 4.000 | 2 | 8.000 | | | | | | | | | | | 14 | 4 | 14 | 1 | 940 |
| 66 | 5 | U101 | BEAM | E | 13S | | 2 | 8.000 | 2 | 7.000 | 2 | 8.000 | 2 | 7.000 | | | | | | | 11 | 6 | 11 | 2 | 769 |
| 10 | 5 | U102 | BEAM | E | 10S | | | | 2 | 7.000 | 2 | 8.000 | | | | | | | | | 7 | 10 | 7 | 7 | 79 |
| 53 | 4 | U103 | BEAM | E | 10S | | | | 1 | 7.000 | 2 | 8.000 | | | | | | | | | 5 | 10 | 5 | 8 | 201 |
| 69 | 5 | U104 | DIAPH | E | 37S | | 3 | 3.000 | 2 | 2.000 | | | | | | | | | | | 9 | 8 | 9 | 5 | 678 |
| 69 | 6 | U105 | DIAPH | E | 19S | | 2 | 6.000 | 2 | 8.000 | | | | | | | | | | | 5 | 2 | 5 | 0 | 518 |
| 123 | 6 | U106 | DIAPH | E | 19S | | 2 | 8.000 | 4 | 2.000 | | | | | | | | | | | 6 | 10 | 6 | 8 | 1232 |
| 10 | 5 | V100 | BEAM | E | 17 | | 5 | 4.000 | | | | | | | | | | | | | 5 | 11 | 5 | 11 | 62 |
| 50 | 6 | V101 | DIAPH | E | 20 | | 2 | 6.000 | | | | | | | | | | | | | 2 | 6 | 2 | 6 | 188 |
| 40 | 6 | V102 | WINGWALL | E | 20 | | 6 | 2.000 | | | | | | | | | | | | | 6 | 2 | 6 | 2 | 370 |
| | | | INT BENT 2 | | | | | | | | | | | | | | | | | | | | | | |
| 16 | 10 | H201 | CAP | E | 17 | | 50 | 7.000 | | | | | | | | | | | | | 52 | 1 | 52 | 1 | 3,586 |
| 4 | 10 | H202 | CAP | E | 10 | | | | 1 | 6.000 | 10 | 8.000 | | | | | | | | | 13 | 8 | 13 | 0 | 224 |
| 8 | 6 | H203 | CAP | E | 20 | | 50 | 0.000 | | | | | | | | | | | | | 50 | 0 | 50 | 0 | 601 |
| 8 | 6 | H204 | CAP | E | 20 | | 48 | 0.000 | | | | | | | | | | | | | 48 | 0 | 48 | 0 | 577 |
| 6 | 6 | H205 | CAP | E | 20 | | 53 | 3.000 | | | | | | | | | | | | | 53 | 3 | 53 | 3 | 480 |
| 16 | 10 | H206 | CAP | E | 10 | | | | 1 | 6.000 | 9 | 8.000 | | | | | | | | | 12 | 8 | 12 | 0 | 826 |
| 8 | 10 | H207 | CAP | E | 18 | | 4 | 10.000 | | | | | | | | | | | | | 7 | 9 | 7 | 9 | 267 |
| 6 | 6 | H208 | CAP | E | 20 | | 14 | 3.000 | | | | | | | | | | | | | 14 | 3 | 14 | 3 | 128 |
| 4 | 10 | H209 | CAP | E | 10 | | | | 1 | 6.000 | 7 | 8.000 | | | | | | | | | 10 | 8 | 10 | 0 | 172 |
| 4 | 10 | H210 | CAP | E | 10 | | | | 1 | 6.000 | 8 | 8.000 | | | | | | | | | 11 | 8 | 11 | 0 | 189 |
| 150 | 6 | U201 | CAP | E | 13S | | 1 | 10.000 | 4 | 9.000 | 1 | 10.000 | 4 | 9.000 | | | | | | | 14 | 6 | 14 | 0 | 3,154 |
| 82 | 6 | U202 | CAP | E | 13S | | 1 | 10.000 | 5 | 1.000 | 1 | 10.000 | 5 | 1.000 | | | | | | | 15 | 2 | 14 | 8 | 1,806 |
| 46 | 6 | U203 | CAP | E | 13S | | 1 | 10.000 | 5 | 6.000 | 1 | 10.000 | 5 | 6.000 | | | | | | | 16 | 0 | 15 | 6 | 1,071 |
| 78 | 6 | U204 | CAP | E | 13S | | 1 | 10.000 | 5 | 2.000 | 1 | 10.000 | 5 | 2.000 | | | | | | | 15 | 4 | 14 | 10 | 1,738 |
| 10 | 6 | U205 | CAP | E | 10S | | | | 4 | 9.000 | 2 | 9.000 | | | | | | | | | 12 | 3 | 11 | 11 | 179 |
| 5 | 6 | U206 | CAP | E | 10S | | | | 5 | 1.000 | 2 | 9.000 | | | | | | | | | 12 | 11 | 12 | 7 | 95 |
| 10 | 6 | U207 | CAP | E | 10S | | | | 5 | 6.000 | 2 | 9.000 | | | | | | | | | 13 | 9 | 13 | 5 | 202 |
| 5 | 6 | U208 | CAP | E | 10S | | | | 5 | 2.000 | 2 | 9.000 | | | | | | | | | 13 | 1 | 12 | 9 | 96 |
| 10 | 6 | U209 | CAP | E | 10S | | | | 4 | 9.000 | 2 | 9.000 | | | | | | | | | 12 | 3 | 11 | 11 | 179 |
| 12 | 6 | U210 | CAP | E | 10 | | | | 1 | 0.000 | 2 | 6.000 | | | | | | | | | 4 | 6 | 4 | 2 | 75 |
| 54 | 6 | D200 | CAP | E | 20 | | 2 | 6.000 | | | | | | | | | | | | | 2 | 6 | 2 | 6 | 203 |
| 96 | 6 | V200 | PILE | E | 17 | | 7 | 3.000 | | | | | | | | | | | | | 7 | 11 | 7 | 11 | 1,142 |
| 24 | 4 | P201 | PILE | E | 34S | | 5 | 3.000 | | 3.000 | | | | | | | 1 | 8.000 | | | 6 | 0 | 6 | 0 | 96 |

## Bill of Reinforcing Steel

| No. Req. | Size / Mark | | Location | Codes C | SH | V | Dimensions B ft | B in. | C ft | C in. | D ft | D in. | E ft | E in. | F ft | F in. | H ft | H in. | K ft | K in. | Nom. Length ft | Nom. Length in. | Actual Length ft | Actual Length in. | Weight lb |
|---|---|---|---|---|---|---|---|---|---|---|---|---|---|---|---|---|---|---|---|---|---|---|---|---|---|
| 56 | 4 | P202 | PILE | E | 34S | | 5 | 3.000 | | 3.000 | | | | | | | 1 | 8.000 | | | 6 | 0 | 6 | 0 | 224 |
| | | | END BENT 3 | | | | | | | | | | | | | | | | | | | | | | |
| 9 | 6 | F300 | WINGWALL | E | 23 | | 1 | 8.000 | 3 | 10.000 | 1 | 8.000 | 1 | 1.875 | 1 | 2.375 | 1 | 1.875 | 1 | 2.375 | 7 | 2 | 7 | 1 | 96 |
| 3 | 6 | F301 | CORNER | E | 21 | | | | 5 | 4.000 | 2 | 6.000 | | | | | | | | | 7 | 10 | 7 | 6 | 34 |
| 9 | 6 | F302 | WINGWALL | E | 23 | | 1 | 8.000 | 3 | 10.000 | 1 | 8.000 | 1 | 2.375 | 1 | 1.875 | 1 | 2.375 | 1 | 1.875 | 7 | 2 | 7 | 1 | 96 |
| 3 | 6 | F303 | CORNER | E | 23 | | 2 | 7.000 | 4 | 10.000 | | | | | | | 2 | 6.880 | | 1.000 | 7 | 5 | 7 | 3 | 33 |
| 18 | 9 | H300 | BEAM/DIAPH | E | 20 | | 51 | 8.000 | | | | | | | | | | | | | 51 | 8 | 51 | 8 | 3162 |
| 18 | 9 | H301 | BEAM/DIAPH | E | 20 | | 51 | 8.000 | | | | | | | | | | | | | 51 | 8 | 51 | 8 | 3162 |
| 4 | 6 | H302 | BEAM | E | 20 | | 49 | 10.000 | | | | | | | | | | | | | 49 | 10 | 49 | 10 | 299 |
| 4 | 6 | H303 | BEAM | E | 20 | | 49 | 10.000 | | | | | | | | | | | | | 49 | 10 | 49 | 10 | 299 |
| 5 | 5 | H304 | DIAPH | E | 20 | | 49 | 10.000 | | | | | | | | | | | | | 49 | 10 | 49 | 10 | 260 |
| 3 | 6 | H305 | DIAPH | E | 20 | | 2 | 10.000 | | | | | | | | | | | | | 2 | 10 | 2 | 10 | 13 |
| 93 | 5 | H306 | DIAPH | E | 19 | | 2 | 0.000 | 1 | 3.000 | | | | | | | | | | | 3 | 3 | 3 | 1 | 299 |
| 27 | 6 | H307 | DIAPH | E | 20 | | 8 | 8.000 | | | | | | | | | | | | | 8 | 8 | 8 | 8 | 351 |
| 6 | 6 | H308 | BEAM | E | 20 | | 53 | 7.000 | | | | | | | | | | | | | 53 | 7 | 53 | 7 | 483 |
| 4 | 6 | H309 | DIAPH | E | 20 | | 2 | 0.000 | | | | | | | | | | | | | 2 | 0 | 2 | 0 | 12 |
| 6 | 6 | H310 | BEAM | E | 20 | | 24 | 0.000 | | | | | | | | | | | | | 24 | 0 | 24 | 0 | 216 |
| 10 | 5 | H311 | STRAND TIE | E | 20 | | 5 | 9.000 | | | | | | | | | | | | | 5 | 9 | 5 | 9 | 60 |
| 5 | 6 | H312 | DIAPH | E | 20 | | 49 | 10.000 | | | | | | | | | | | | | 49 | 10 | 49 | 10 | 374 |
| 3 | 6 | H313 | DIAPH | E | 20 | | 2 | 10.000 | | | | | | | | | | | | | 2 | 10 | 2 | 10 | 13 |
| | | H314 | NOT USED | | | | | | | | | | | | | | | | | | | | | | |
| 8 | 8 | H315 | WINGWALL | E | 20 | | 11 | 7.000 | | | | | | | | | | | | | 11 | 7 | 11 | 7 | 247 |
| 20 | 10 | H316 | WINGWALL | E | 17 | | 11 | 7.000 | | | | | | | | | | | | | 13 | 1 | 13 | 1 | 1126 |
| 8 | 8 | H317 | WINGWALL | E | 20 | | 11 | 8.000 | | | | | | | | | | | | | 11 | 8 | 11 | 8 | 249 |
| 20 | 10 | H318 | WINGWALL | E | 17 | | 11 | 8.000 | | | | | | | | | | | | | 13 | 2 | 13 | 2 | 1133 |
| 9 | 6 | H319 | DIAPH | E | 20 | | 5 | 3.000 | | | | | | | | | | | | | 5 | 3 | 5 | 3 | 71 |
| 9 | 6 | H320 | DIAPH | E | 20 | | 6 | 0.000 | | | | | | | | | | | | | 6 | 0 | 6 | 0 | 81 |
| 67 | 5 | U300 | BEAM | E | 37S | | 5 | 5.000 | 2 | 8.000 | | | | | | | | | | | 14 | 6 | 14 | 3 | 996 |
| 62 | 5 | U301 | BEAM | E | 13S | | 2 | 8.000 | 2 | 7.000 | 2 | 8.000 | 2 | 7.000 | | | | | | | 11 | 6 | 11 | 2 | 722 |
| 11 | 5 | U302 | BEAM | E | 10S | | | | 2 | 7.000 | 2 | 8.000 | | | | | | | | | 7 | 10 | 7 | 7 | 87 |
| 53 | 4 | U303 | BEAM | E | 10S | | | | 1 | 11.000 | 2 | 8.000 | | | | | | | | | 6 | 6 | 6 | 4 | 224 |
| 70 | 5 | U304 | DIAPH | E | 37S | | 3 | 2.000 | 2 | 2.000 | | | | | | | | | | | 9 | 6 | 9 | 3 | 675 |
| 70 | 6 | U305 | DIAPH | E | 19S | | 2 | 6.000 | 2 | 8.000 | | | | | | | | | | | 5 | 2 | 5 | 0 | 526 |
| 123 | 6 | U306 | DIAPH | E | 19S | | 2 | 8.000 | 4 | 2.000 | | | | | | | | | | | 6 | 10 | 6 | 8 | 1232 |
| 6 | 5 | V300 | BEAM | E | 17 | | 5 | 5.000 | | | | | | | | | | | | | 6 | 0 | 6 | 0 | 38 |
| 50 | 6 | V301 | DIAPH | E | 20 | | 2 | 6.000 | | | | | | | | | | | | | 2 | 6 | 2 | 6 | 188 |
| 40 | 6 | V302 | WINGWALL | E | 20 | | 6 | 2.000 | | | | | | | | | | | | | 6 | 2 | 6 | 2 | 370 |

# BILL OF REINFORCING 01

Designed JDS JAN 2026
Detailed PAC JAN 2026
Checked JDS MAR 2026

Note: This drawing is not to scale. Follow dimensions.



STATE OF MISSOURI
TYSON B. STEIN
NUMBER PE-2013004346
PROFESSIONAL ENGINEER

DATE PREPARED 8-APR-2026
ROUTE I-70 | STATE MO
DISTRICT BR | SHEET NO. BR12-34
COUNTY BOONE
JOB NUMBER JST0017
CONTRACT ID. 251203-D01
PROJECT NO. IS 70-2(128)
BRIDGE NO. A9825

| REV | DATE | DESCRIPTION |
|---|---|---|
| 0 | 041026 | RFC Submittal |

IF A SEAL IS PRESENT ON THIS SHEET IT HAS BEEN ELECTRONICALLY SEALED AND DATED.

MISSOURI HIGHWAYS AND TRANSPORTATION COMMISSION
105 WEST CAPITOL
JEFFERSON CITY, MO 65102
1-888-ASK-MODOT (1-888-275-6636)

IMPROVE I-70 ROCHEPORT TO COLUMBIA

PARSONS
530 MARYVILLE CENTRE DRIVE, SUITE 400
ST. LOUIS, MISSOURI 63141 - 314.434.2800

EMERY SAPP & SONS, INC

MO STATE CERTIFICATE OF AUTHORITY #000479 ENGINEERING

REV. RevDesc

04/13/2026
Released for Construction

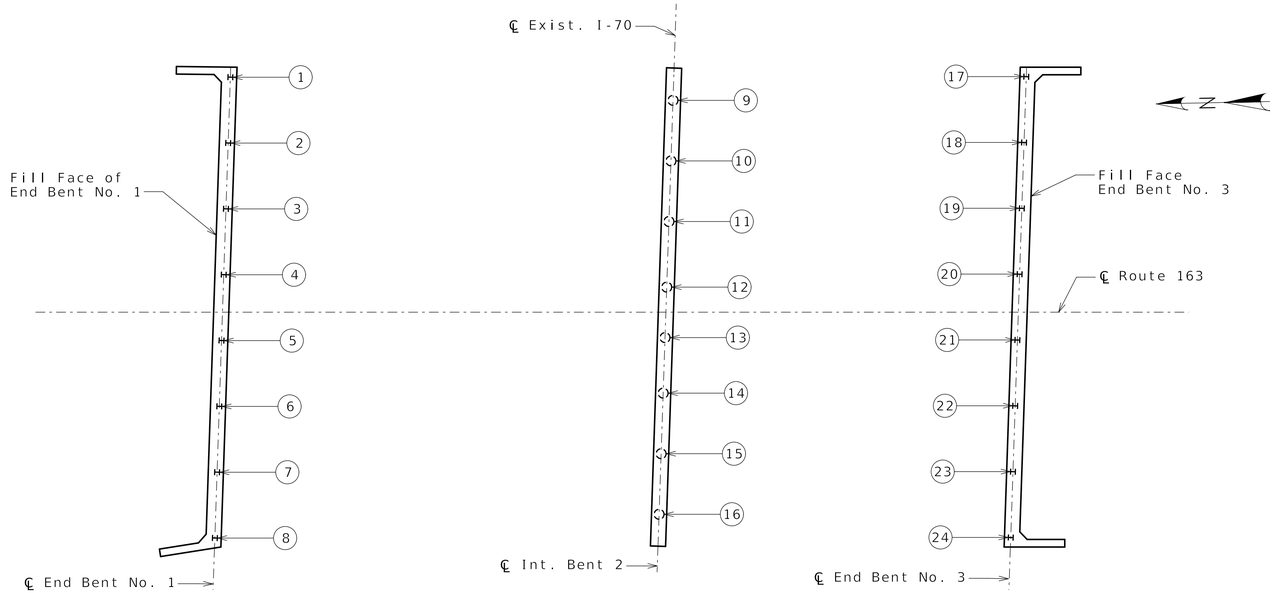


PART PLAN SHOWING PILE NUMBERING FOR RECORDING AS-BUILT DATA

| As-Built Pile Data | | | |
|---|---|---|---|
| Pile No. | Length in place (ft) | Computed Nominal Axial Compressive Resistance (Kips) | Remarks |
| End Bent No. 1 | | | |
| 1 | | | |
| 2 | | | |
| 3 | | | |
| 4 | | | |
| 5 | | | |
| 6 | | | |
| 7 | | | |
| 8 | | | |
| | | | |
| | | | |
| End Bent No. 3 | | | |
| 17 | | | |
| 18 | | | |
| 19 | | | |
| 20 | | | |
| 21 | | | |
| 22 | | | |
| 23 | | | |
| 24 | | | |
| | | | |
| | | | |

| As-Built Pile Data | | | | | |
|---|---|---|---|---|---|
| Pile No. | Length in Place (ft.) | PDA Nom. Axial Compressive Resistance (Kips) | PDA End of Drive Blow Count (blows/in.) | Actual End of Drive Blow Count (blows/in.) | Remarks |
| Intermediate Bent No. 2 | | | | | |
| 9 | | | | | |
| 10 | | | | | |
| 11 | | | | | |
| 12 | | | | | |
| 13 | | | | | |
| 14 | | | | | |
| 15 | | | | | |
| 16 | | | | | |
| | | | | | |
| | | | | | |

NOTES:

Indicate in remark column:
A. Pile type and grade
B. Batter
C. Driven to parctical refusal
D. PDA test pile
E. Minimum tip elevation controlled
(Use when actual blow count is less than PDA blow count due to minimum tip elevation requirement. A plus sign (+) shall be placed after the PDA nominal axial compressive resistance value indicating actual value is higher than PDA value.)

This sheet to be completed by MoDOT construction personnel.

# AS-BUILT FOUNDATION DATA

Designed JDS JAN 2026
Detailed PAC JAN 2026
Checked JDS APR 2026

Note: This drawing is not to scale. Follow dimensions.



STATE OF MISSOURI
TYSON B. STEIN
NUMBER PE-2013004346
PROFESSIONAL ENGINEER

DATE PREPARED 6-APR-2026
ROUTE I-70 | STATE MO
DISTRICT BR | SHEET NO. BR12-36
COUNTY BOONE
JOB NUMBER JST0017
CONTRACT ID. 251203-D01
PROJECT NO. IS 70-2(128)
BRIDGE NO. A9825

| REV | DATE | DESCRIPTION |
|---|---|---|
| 0 | 041026 | RFC Submittal |

MISSOURI HIGHWAYS AND TRANSPORTATION COMMISSION
105 WEST CAPITOL
JEFFERSON CITY, MO 65102
1-888-ASK-MODOT (1-888-275-6636)

IMPROVE I-70 ROCHEPORT TO COLUMBIA

PARSONS
530 MARYVILLE CENTRE DRIVE, SUITE 400
ST. LOUIS, MISSOURI 63141 - 314.434.2800

EMERY SAPPS SONS, INC

MO STATE CERTIFICATE OF AUTHORITY #000479 ENGINEERING

IF A SEAL IS PRESENT ON THIS SHEET IT HAS BEEN ELECTRONICALLY SEALED AND DATED.

REV. RevDesc

04/13/2026
Released for Construction

## LOG OF BORING: B-3 (Page 1 of 2)

Surface Elevation: 746.5 | Completion Date: 5/2/23 | Datum: NAVD88 | Northing: 1141946.81 | Easting: 1687743.52

| Depth (ft) | Elevation (ft) | Description of Material | SPT Blow Counts (N60) / Core Recovery/RQD | Samples |
|---|---|---|---|---|
| 0 | 746.5 | Asphalt - 5 inches | | |
| | | Concrete - 6 inches | | |
| | | Granular Base - 4 inches | | |
| | | (1.3 to 18.0 ft) Fill: medium stiff, brown, lean clay, some to trace sand | 3-3-5 (11) | SS1 |
| 5 | 741.5 | | 109 | SS2 |
| 10 | 736.5 | | 1-2-2 (5) | SS3 |
| 15 | 731.5 | | 4-8-9 (23) | SS4 |
| | | (18.0 to 22.0 ft) Very stiff to hard, brown, LEAN CLAY, some sand, little gravel - CL (Glacial Till) | 8-11-18 (39) | SS5 |
| 20 | 726.5 | | | |
| | | (22.0 to 53.0 Very stiff to hard, gray, LEAN CLAY and sand, little gravel - CL (Glacial Till) | 8-18-27 (60) | SS6 |
| 25 | 721.5 | | | |
| 30 | 716.5 | | 14-32-26 (77) | SS7 |
| 35 | 711.5 | | 7-14-24 (51) | SS8 |
| 40 | 706.5 | | 5-12-23 (47) | SS9 |

Shear strength, tsf: Δ - UU/2; ○ - QU/2; ▯ - PP/2. Standard Penetration Resistance ▲ N-Value (Blows per Foot) (ASTM D 1586). Water Content, %: PL — LL. Plotted values: 3.25 (SS7), 4 (SS8), 3.5 (SS9).

NOTE: STRATIFICATION LINES REPRESENT THE APPROXIMATE BOUNDARIES BETWEEN SOIL TYPES AND THE TRANSITION MAY BE GRADUAL. GRAPHIC LOG FOR ILLUSTRATION PURPOSES ONLY.

**GROUNDWATER DATA:** X FREE WATER NOT ENCOUNTERED DURING DRILLING

**DRILLING DATA:** __ AUGER 3 3/4" HOLLOW STEM; WASHBORING FROM __ FEET; RR DRILLER; VTZ LOGGER; CME 55HTX DRILL RIG; HAMMER TYPE Auto; HAMMER EFFICIENCY 80 %

**REMARKS:**

Drawn by: ADP, Date: 6/22/23 | Checked by: CKK, Date: 10/2/23 | App'vd. by: CKK, Date: 10/2/23

GEOTECHNOLOGY — A Universal Engineering Sciences Company

I-70 Improvements, Providence Road over I-70, Boone County, Missouri

Project No. J036741.01

N60 BORING LOG (WITH PAGE #) B-3 AND B-4.GPJ 00 CLONE ME.GPJ 9/29/23

## LOG OF BORING: B-3 (Page 2 of 2)

Surface Elevation: 746.5 | Completion Date: 5/2/23 | Datum: NAVD88 | Northing: 1141946.81 | Easting: 1687743.52

| Depth (ft) | Elevation (ft) | Description of Material | SPT Blow Counts (N60) / Core Recovery/RQD | Samples |
|---|---|---|---|---|
| | | (22.0 to 53.0 Very stiff to hard, gray, LEAN CLAY and sand, little gravel - CL (Glacial Till) *(continued)* | 7-11-19 (40) | SS10 |
| 45 | 701.5 | | | |
| 50 | 696.5 | | 5-8-10 (24) | SS11 |
| | | (53.0 to 59.9 ft) Extremely weak to very weak, gray, very finely grained, thin to medium bedded, slightly weathered to unweathered SHALE | 13-31-45 (101) | SS12 |
| 55 | 691.5 | | 92% / 50% | NQ1 |
| 60 | 686.5 | (59.9 to 62.0 ft) Core Loss - 26 inches (rock core not recovered) | 48% / 30% | NQ2 |
| | | (62.0 to 64.0 ft) shale cont. | | |
| | | unconfined compressive strength = 14 psi (2 ksf) | | |
| 65 | 681.5 | (64.0 to 64.4 ft) Core Loss - 5 inches (rock core not recovered) | 90% / 25% | NQ3 |
| | | (64.4 to 65.0 ft) shale cont. | | |
| | | unconfined compressive strength = 635 psi (91 ksf) | | |
| | | (65.0 to 65.4 ft) Core Loss - 5 inches (rock core not recovered) | | |
| | | (65.4 to 67.5 ft) shale cont. | | |
| | | (67.5 to 69.0 ft) Strong, gray and white, very finely crystalline, thin to medium bedded, unweathered LIMESTONE and chert layers/nodules | | |
| | | Boring terminated at 69 feet. | | |
| 70 | 676.5 | | | |
| 75 | 671.5 | | | |
| 80 | 666.5 | | | |

Plotted values: 3.25 (SS10), 3.25 (SS11), 76 (SS12).

**GROUNDWATER DATA:** X FREE WATER NOT ENCOUNTERED DURING DRILLING

**DRILLING DATA:** __ AUGER 3 3/4" HOLLOW STEM; WASHBORING FROM __ FEET; RR DRILLER; VTZ LOGGER; CME 55HTX DRILL RIG; HAMMER TYPE Auto; HAMMER EFFICIENCY 80 %

**REMARKS:**

Drawn by: ADP, Date: 6/22/23 | Checked by: CKK, Date: 10/2/23 | App'vd. by: CKK, Date: 10/2/23

GEOTECHNOLOGY — A Universal Engineering Sciences Company

I-70 Improvements, Providence Road over I-70, Boone County, Missouri

Project No. J036741.01

## LOG OF BORING: B-4 (Page 1 of 2)

Surface Elevation: 746.9 | Completion Date: 5/2/23 | Datum: NAVD88 | Northing: 1141593.33 | Easting: 1687630.35

| Depth (ft) | Elevation (ft) | Description of Material | SPT Blow Counts (N60) / Core Recovery/RQD | Samples |
|---|---|---|---|---|
| 0 | 746.9 | Asphalt - 4 inches | | |
| | | Concrete - 5 inches | | |
| | | Granular Base - 4 inches | | |
| | | (1.1 to 12.5 ft) Fill: medium stiff, brown, lean clay, some to trace sand | 2-3-5 (12) | SS1 |
| 5 | 741.9 | | | |
| 10 | 736.9 | | 3-5-6 (16) | SS2 |
| | | (12.5 to 22.0 ft) Very stiff to hard, brown, LEAN CLAY and sand, little gravel - CL (Glacial Till) | 7-15-19 (50) | SS3 |
| 15 | 731.9 | | | |
| 20 | 726.9 | | 12-22-33 (82) | SS4 |
| | | (22.0 to 48.0 ft) Very stiff to hard, gray, LEAN CLAY, some sand, little gravel - (CL) (Glacial Till) | 11-19-26 (67) | SS5 |
| 25 | 721.9 | | | |
| 30 | 716.9 | | 9-19-27 (68) | SS6 |
| 35 | 711.9 | | 10-13-18 (46) | SS7 |
| 40 | 706.9 | | 10-19-24 (64) | SS8 |

Plotted values: 3.25 (SS3), 4.5 (SS5), 4 (SS6), 3.5 (SS7), 3.75 (SS8).

**GROUNDWATER DATA:** ENCOUNTERED AT 18 FEET ▽

**DRILLING DATA:** __ AUGER 3 3/4" HOLLOW STEM; WASHBORING FROM __ FEET; DT DRILLER; PDB LOGGER; CME 55LC DRILL RIG; HAMMER TYPE Auto; HAMMER EFFICIENCY 89 %

**REMARKS:**

Drawn by: ADP, Date: 6/22/23 | Checked by: CKK, Date: 10/2/23 | App'vd. by: CKK, Date: 10/2/23

GEOTECHNOLOGY — A Universal Engineering Sciences Company

I-70 Improvements, Providence Road over I-70, Boone County, Missouri

Project No. J036741.01

## LOG OF BORING: B-4 (Page 2 of 2)

Surface Elevation: 746.9 | Completion Date: 5/2/23 | Datum: NAVD88 | Northing: 1141593.33 | Easting: 1687630.35

| Depth (ft) | Elevation (ft) | Description of Material | SPT Blow Counts (N60) / Core Recovery/RQD | Samples |
|---|---|---|---|---|
| | | (22.0 to 48.0 ft) Very stiff to hard, gray, LEAN CLAY, some sand, little gravel - (CL) (Glacial Till) *(continued)* | 8-13-14 (40) | SS9 |
| 45 | 701.9 | | | |
| | | (48.0 to 48.5 ft) Extremely weak to very weak, tan to gray, very finely grained, slightly weathered SHALE | 12-22-30 (77) | SS10 |
| 50 | 696.9 | | | |
| 55 | 691.9 | | 50/2" | SS11 |
| | | (58.5 to 58.7 ft) Core Loss - 2 inches (rock core not recovered) | 89% / 55% | NQ1 |
| | | (58.7 to 58.9 ft) shale cont. | | |
| | | (58.9 to 68.5 ft) Medium strong to strong, gray, thin to thick bedded, very finely crystalline, unweathered LIMESTONE | 100% / 100% | NQ2 |
| 60 | 686.9 | unconfined compressive strength = 10,680 psi (1,538 ksf) | | |
| 65 | 681.9 | unconfined compressive strength = 10,727 psi (1,545 ksf) | 92% / 67% | NQ3 |
| | | (68.5 to 69.6 ft) Very weak, gray, very finely grained, thin to medium bedded, unweathered SHALE | | |
| | | (69.6 to 70.0 ft) Core Loss - 5 inches (rock core not recovered) | | |
| 70 | 676.9 | (70.0 to 80.0 ft) Strong to very strong, gray, thin to thick bedded, very finely crystalline, unweathered LIMESTONE, trace chert layers/nodules | 100% / 90% | NQ4 |
| | | unconfined compressive strength = 8,546 psi (1,231 ksf) | | |
| 75 | 671.9 | unconfined compressive strength = 15,042 psi (2,166 ksf) | 100% / 88% | NQ5 |
| | | (77.5 to 79.4 ft) chert layer | | |
| | | unconfined compressive strength = 3,142 psi (452 ksf) | | |
| 80 | 666.9 | Boring terminated at 80 feet. | | |

Plotted values: 3.5 (SS9).

**GROUNDWATER DATA:** ENCOUNTERED AT 18 FEET ▽

**DRILLING DATA:** __ AUGER 3 3/4" HOLLOW STEM; WASHBORING FROM __ FEET; DT DRILLER; PDB LOGGER; CME 55LC DRILL RIG; HAMMER TYPE Auto; HAMMER EFFICIENCY 89 %

**REMARKS:**

Drawn by: ADP, Date: 6/22/23 | Checked by: CKK, Date: 10/2/23 | App'vd. by: CKK, Date: 10/2/23

GEOTECHNOLOGY — A Universal Engineering Sciences Company

I-70 Improvements, Providence Road over I-70, Boone County, Missouri

Project No. J036741.01

## BORING NUMBER CR-03 (PAGE 1 OF 1)

Crockett GTL, 1000 W Nifong Blvd, Bldg 1, Columbia, MO 65203, Telephone: 573-447-0292 — CROCKETT Geotechnical - Testing Lab

CLIENT Parsons | PROJECT NAME Providence over I-70
PROJECT NUMBER G251248 | PROJECT LOCATION Columbia, Missouri
DATE STARTED 2/12/26 | COMPLETED 2/12/26 | GROUND ELEVATION 743.9 ft MSL | HOLE SIZE 4"
DRILL RIG IPES Mobile B-57 (Hammer Efficiency = 91.7%) | GROUND WATER LEVELS:
DRILLING METHOD 4" SSA | ▽ AT TIME OF DRILLING 18.50 ft / Elev 725.40 ft
LOGGED BY Walsh | CHECKED BY Lidholm | ▼ AT END OF DRILLING 19.00 ft / Elev 724.90 ft
NOTES Borehole backfilled upon completion | ▼ 0.25hrs AFTER DRILLING 19.50 ft / Elev 724.40 ft

| Depth (ft) | Material Description | Sample Type Number | Recovery Length | Blow Counts (N Value) | Penetrometer (tsf) | Unc. Comp. (tsf) | Dry Unit Wt. (pcf) | Moisture Content (%) | Liquid Limit | Plastic Limit | Plasticity Index |
|---|---|---|---|---|---|---|---|---|---|---|---|
| 0.3 | TOPSOIL (3-inches) (743.7) | | | | | | | | | | |
| | FILL: Lean clay, brown, trace gray, trace sand and gravel | SPT 1 | 8 | 2-3-3 (6) | 1.8 | | | 15 | | | |
| | | SPT 2 | 12 | 2-3-6 (9) | 3.2 | | | 15 | 36 | 15 | 21 |
| 8.0 | LEAN CLAY: Brown, trace lignite stains, trace sand and gravel (glacial drift) (735.9) | SPT 3 | 16 | 2-4-5 (9) | 2.7 | | | 21 | | | |
| 13.0 | CLAYEY SAND: Brown, trace gravel (glacial drift) (730.9) | SPT 4 | 16 | 7-6-6 (12) | sand | | | 16 | | | |
| | | SPT 5 | 16 | 3-6-9 (15) | sand | | | 20 | | | |
| 23.0 | LEAN CLAY: Dark gray, with cobbles and boulders, trace sand and gravel (glacial drift) (720.9) | SPT 6 | 8 | 13-14-16 (30) | 4.8 | | | 14 | | | |
| | | SPT 7 | 16 | 9-12-15 (27) | 4.5 | | | 16 | | | |
| | | SPT 8 | 9 | 12-10-14 (24) | 4.1 | | | 25 | | | |
| 40.0 | (703.9) | SPT 9 | 10 | 8-11-13 (24) | 3.2 | | | 27 | | | |

No refusal.
Bottom of borehole at 40.0 feet.

SAMPLE LENGTH REPORT (TSF) - LAT-LONG TEMPLATE.GDT - 2/17/26 11:55 - V:\===PROJECTS===\GEOT PROJECTS\2025\G251248 - I-70 RC-2\== 07 PROVIDENCE\G251248 - PROVIDENCE WALLS.GPJ

## BORING NUMBER CR-04 (PAGE 1 OF 1)

Crockett GTL, 1000 W Nifong Blvd, Bldg 1, Columbia, MO 65203, Telephone: 573-447-0292

CLIENT Parsons | PROJECT NAME Providence over I-70
PROJECT NUMBER G251248 | PROJECT LOCATION Columbia, Missouri
DATE STARTED 2/11/26 | COMPLETED 2/11/26 | GROUND ELEVATION 729 ft MSL | HOLE SIZE 4"
DRILL RIG IPES Mobile B-57 (Hammer Efficiency = 91.7%) | GROUND WATER LEVELS:
DRILLING METHOD 4" SSA | ▽ AT TIME OF DRILLING 13.50 ft / Elev 715.50 ft
LOGGED BY Walsh | CHECKED BY Lidholm | ▼ AT END OF DRILLING 14.00 ft / Elev 715.00 ft
NOTES Borehole backfilled upon completion | ▼ 0.25hrs AFTER DRILLING 14.00 ft / Elev 715.00 ft

| Depth (ft) | Material Description | Sample Type Number | Recovery Length | Blow Counts (N Value) | Penetrometer (tsf) | Unc. Comp. (tsf) | Dry Unit Wt. (pcf) | Moisture Content (%) | Liquid Limit | Plastic Limit | Plasticity Index |
|---|---|---|---|---|---|---|---|---|---|---|---|
| 0.3 | TOPSOIL (3-inches) (728.8) | | | | | | | | | | |
| | LEAN CLAY: Brown, trace lignite stains, with sand, trace gravel (glacial drift) | ST 1 | 24 | | 2.0 | 1.074 | 111 | 17 | | | |
| | | ST 2 | 21 | | 5.8 | 2.718 | 118 | 14 | 28 | 14 | 14 |
| 8.0 | CLAYEY SAND: Brown, with cobbles and boulders, trace gravel (glacial drift) — 200 Wash = 29% passing (721.0) | SPT 3 | 13 | 10-15-16 (31) | sand | | | 19 | | | |
| 13.0 | LEAN CLAY: Dark gray, with cobbles and boulders, trace sand and gravel (glacial drift) (716.0) | SPT 4 | 16 | 12-16-17 (33) | 5.4 | | | 13 | | | |
| | | SPT 5 | 14 | 7-9-14 (23) | 4.8 | | | 16 | | | |
| | | SPT 6 | 13 | 8-16-22 (38) | 4.8 | | | 15 | | | |
| | | SPT 7 | 14 | 6-12-19 (31) | 4.4 | | | 23 | | | |
| 35.0 | (694.0) | SPT 8 | 11 | 5-7-9 (16) | 3.9 | | | 22 | | | |

No refusal.
Bottom of borehole at 35.0 feet.

## BORING NUMBER CR-05 (PAGE 1 OF 1)

Crockett GTL, 1000 W Nifong Blvd, Bldg 1, Columbia, MO 65203, Telephone: 573-447-0292

CLIENT Parsons | PROJECT NAME Providence over I-70
PROJECT NUMBER G251248 | PROJECT LOCATION Columbia, Missouri
DATE STARTED 2/11/26 | COMPLETED 2/11/26 | GROUND ELEVATION 733.3 ft MSL | HOLE SIZE 4"
DRILL RIG IPES Mobile B-57 (Hammer Efficiency = 91.7%) | GROUND WATER LEVELS:
DRILLING METHOD 4" SSA | ▽ AT TIME OF DRILLING 8.50 ft / Elev 724.80 ft
LOGGED BY Walsh | CHECKED BY Lidholm | ▼ AT END OF DRILLING 10.00 ft / Elev 723.30 ft
NOTES Borehole backfilled upon completion | ▼ 0.25hrs AFTER DRILLING 9.50 ft / Elev 723.80 ft

| Depth (ft) | Material Description | Sample Type Number | Recovery Length | Blow Counts (N Value) | Penetrometer (tsf) | Unc. Comp. (tsf) | Dry Unit Wt. (pcf) | Moisture Content (%) | Liquid Limit | Plastic Limit | Plasticity Index |
|---|---|---|---|---|---|---|---|---|---|---|---|
| 0.3 | TOPSOIL (3-inches) (733.1) | | | | | | | | | | |
| | LEAN CLAY: Brown, trace gray, trace lignite stains, trace sand and gravel (glacial drift) | ST 1U | 12 | | 6.0 | 3.375 | 118 | 13 | | | |
| 2.0 | CLAYEY SAND: Brown, with cobbles and boulders, trace gravel (glacial drift) — 200 Wash = 20% passing (731.3) | ST 1L | 12 | | sand | | | 10 | | | |
| | | SPT 2 | 11 | 12-20-21 (41) | sand | | | 12 | | | |
| | 200 Wash = 15% passing | SPT 3 | 14 | 10-17-12 (29) | sand | | | 16 | | | |
| 13.0 | LEAN CLAY: Dark gray, with cobbles and boulders, trace sand and gravel (glacial drift) (720.3) | SPT 4 | 15 | 12-20-29 (49) | 5.2 | | | 13 | | | |
| | | SPT 5 | 14 | 6-9-14 (23) | 2.9 | | | 21 | | | |
| | | SPT 6 | 16 | 8-10-12 (22) | 4.7 | | | 17 | | | |
| 28.0 | (705.3) | | | | | | | | | | |

Auger refusal at 28.0 feet on apparent boulder.
Bottom of borehole at 28.0 feet.

## BORING NUMBER CR-06 (PAGE 1 OF 1)

Crockett GTL, 1000 W Nifong Blvd, Bldg 1, Columbia, MO 65203, Telephone: 573-447-0292

CLIENT Parsons | PROJECT NAME Providence over I-70
PROJECT NUMBER G251248 | PROJECT LOCATION Columbia, Missouri
DATE STARTED 2/11/26 | COMPLETED 2/11/26 | GROUND ELEVATION 747.1 ft MSL | HOLE SIZE 4"
DRILL RIG IPES Mobile B-57 (Hammer Efficiency = 91.7%) | GROUND WATER LEVELS:
DRILLING METHOD 4" SSA | ▽ AT TIME OF DRILLING 18.50 ft / Elev 728.60 ft
LOGGED BY Walsh | CHECKED BY Lidholm | ▼ AT END OF DRILLING 19.00 ft / Elev 728.10 ft
NOTES Borehole backfilled upon completion | ▼ 0.25hrs AFTER DRILLING 19.00 ft / Elev 728.10 ft

| Depth (ft) | Material Description | Sample Type Number | Recovery Length | Blow Counts (N Value) | Penetrometer (tsf) | Unc. Comp. (tsf) | Dry Unit Wt. (pcf) | Moisture Content (%) | Liquid Limit | Plastic Limit | Plasticity Index |
|---|---|---|---|---|---|---|---|---|---|---|---|
| 0.3 | TOPSOIL (3-inches) (746.9) | | | | | | | | | | |
| | FILL: Fat clay, brown, trace gray, trace lignite stains, trace sand and gravel | SPT 1 | 7 | 2-3-5 (8) | 2.2 | | | 20 | | | |
| | | SPT 2 | 8 | 2-2-2 (4) | 2.4 | | | 20 | 58 | 18 | 40 |
| 8.0 | LEAN CLAY: Brown, trace gray, with sand, trace gravel (glacial drift) (739.1) | SPT 3 | 16 | 2-4-7 (11) | 2.1 | | | 24 | | | |
| | --: becomes dark gray | SPT 4 | 11 | 2-4-3 (7) | 2.7 | | | 14 | 30 | 14 | 16 |
| 18.0 | LEAN CLAY: Dark gray, with cobbles and boulders, with sand, trace gravel (glacial drift) (729.1) | SPT 5 | 13 | 17-20-33 (53) | 3.1 | | | 16 | | | |
| | | SPT 6 | 16 | 20-20-30 (50) | 4.4 | | | 12 | | | |
| | | SPT 7 | 16 | 20-30-35 (65) | 6.0 | | | 9 | | | |
| | | SPT 8 | 16 | 19-25-31 (56) | 6.0 | | | 11 | | | |
| 38.5 | CLAYEY SAND: Dark gray, with cobbles and boulders (glacial drift) (708.6) | SPT 9 | 12 | 31-50/6" | sand | | | 13 | | | |
| 39.5 | (707.6) | | | | | | | | | | |

Split spoon refusal at 39.5 feet.
Bottom of borehole at 39.5 feet.

# BORING LOGS 01

Designed JDS JAN 2026
Detailed MLS JAN 2026
Checked NAK APR 2026

Note: This drawing is not to scale. Follow dimensions.



STATE OF MISSOURI — TYSON B. STEIN — NUMBER PE-2013004346 — PROFESSIONAL ENGINEER

| | |
|---|---|
| DATE PREPARED | 6-APR-2026 |
| ROUTE | I-70 |
| STATE | MO |
| DISTRICT | BR |
| SHEET NO. | BR12-37 |
| COUNTY | BOONE |
| JOB NUMBER | JST0017 |
| CONTRACT ID. | 251203-D01 |
| PROJECT NO. | IS 70-2(128) |
| BRIDGE NO. | A9825 |

| REV | DATE | DESCRIPTION |
|---|---|---|
| 0 | 041026 | RFC Submittal |

IF A SEAL IS PRESENT ON THIS SHEET IT HAS BEEN ELECTRONICALLY SEALED AND DATED.

MISSOURI HIGHWAYS AND TRANSPORTATION COMMISSION
105 WEST CAPITOL
JEFFERSON CITY, MO 65102
1-888-ASK-MODOT (1-888-275-6636)

IMPROVE I-70 ROCHEPORT TO COLUMBIA

EMERY SAPP & SONS, INC

PARSONS
530 MARYVILLE CENTRE DRIVE, SUITE 400
ST. LOUIS, MISSOURI 63141 - 314.434.2900

MO STATE CERTIFICATE OF AUTHORITY #000479 ENGINEERING

REV. RevDesc

B_A9825_37_JST0017_Boring Logs 01.dgn 2:49:21 PM Eastern 6-APR-2026