MISSOURI HIGHWAYS AND TRANSPORTATION COMMISSION

PLANS FOR PROPOSED

STATE HIGHWAY
SECTION 19, T24N, R25W
BARRY COUNTY

DESIGN DESIGNATION

A.A.D.T. - 2024 = 1,410
A.A.D.T. - 2044 = 1,813
D.H.V. = 9.78%
T = 17.87%
V = 55 M.P.H.
D = 50.7%/49.3%

FUNCTIONAL CLASSIFICATION- MAJOR COLLECTOR

NORMAL RIGHT OF WAY TO BE ACQUIRED

NORMAL RIGHT OF WAY ACCESS
PERMANENT EASEMENT
TEMPORARY EASEMENT

RIGHT OF WAY LIMITS FOR THIS PROJECT EXTEND FROM STA. 767+00.00 TO STA. 781+00.00 A DISTANCE OF 0.27 MILES.

CONVENTIONAL SYMBOLS
(USED IN PLANS)

	EXISTING	NEW
BUILDINGS AND STRUCTURES		
GUARD RAIL		
GUARD CABLE		
CONCRETE RIGHT-OF-WAY MARKER		
STEEL RIGHT-OF-WAY MARKER		
LOCATION SURVEY MARKER		
UTILITIES		
FIBER OPTICS	—FO—	—FO—
OVERHEAD CABLE TV	—OTV—	—OTV—
UNDERGROUND CABLE TV	—UTV—	—UTV—
OVERHEAD TELEPHONE	—OT—	—OT—
UNDERGROUND TELEPHONE	—UT—	—UT—
OVERHEAD POWER	—OE—	—OE—
UNDERGROUND POWER	—UE—	—UE—
SANITARY SEWER	—S—	—S—
STORM SEWER	—SS—	—SS—
GAS	—G—	—G—
WATER	—W—	—W—
MANHOLE	SAN	
FIRE HYDRANT	HYD	
WATER VALVE	WV	
WATER METER	WM	
DROP INLET	DI	
DITCH BLOCK		
GROUND MOUNTED SIGN	SIGN	
LIGHT POLE		
H-FRAME POWER POLE		
TELEPHONE PEDESTAL	PED	
FENCE		
CHAIN LINK	—V—	
WOVEN WIRE	—X—	
GATE POST		
BENCHMARK	BM	

NOTE: DASHED OR OPEN SYMBOLS INDICATE EXISTING FEATURES

KEY MAP
LOCATION OF BARRY COUNTY

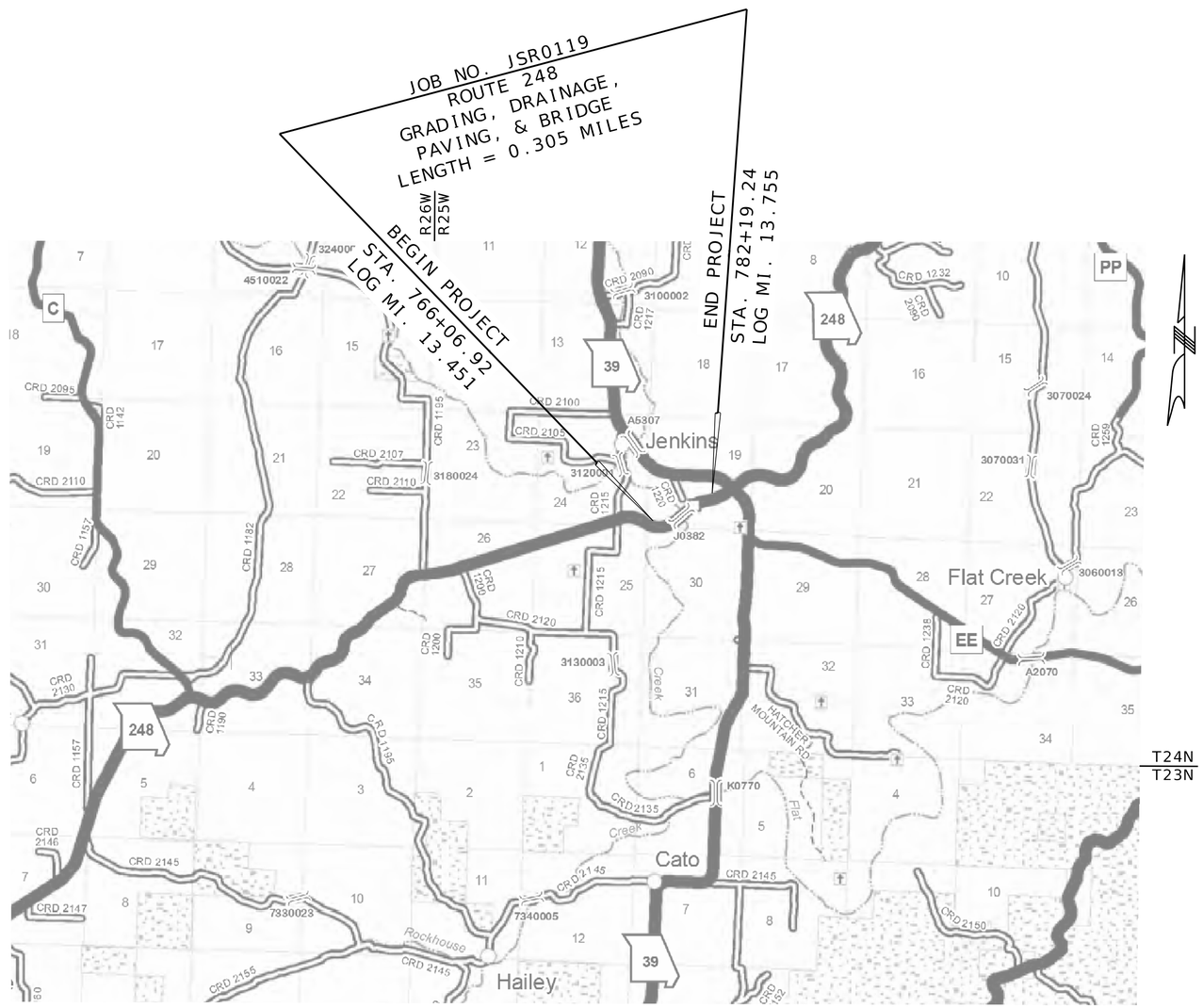

NOT TO SCALE

THE EXISTENCE AND APPROXIMATE LOCATION OF UTILITY FACILITIES KNOWN TO EXIST, AS SHOWN ON THE PLANS, ARE BASED ON THE BEST INFORMATION AVAILABLE TO THE COMMISSION AT THIS TIME. THIS INFORMATION IS PROVIDED BY THE COMMISSION "AS-IS" AND THE COMMISSION EXPRESSLY DISCLAIMS ANY REPRESENTATION OR WARRANTY AS TO THE COMPLETENESS, ACCURACY, OR SUITABILITY OF THE INFORMATION FOR ANY USE. RELIANCE UPON THIS INFORMATION IS DONE AT THE RISK AND PERIL OF THE USER, AND THE COMMISSION SHALL NOT BE LIABLE FOR ANY DAMAGES THAT MAY ARISE FROM ANY ERROR IN THE INFORMATION. IT IS, THEREFORE, THE RESPONSIBILITY OF THE CONTRACTOR TO VERIFY THE EXISTENCE, LOCATION AND STATUS OF ANY FACILITY. SUCH VERIFICATION INCLUDES DIRECT CONTACT WITH THE LISTED UTILITIES.

INDEX OF SHEETS

DESCRIPTION	SHEET NUMBER
TITLE SHEET	1
TYPICAL SECTIONS (TS) (3 SHEETS)	2
QUANTITIES (QU) (4 SHEETS)	3
PLAN-PROFILE (PP)	4-8
COORDINATE POINTS (CP)	9
TRAFFIC CONTROL SHEETS (TC)	10-15
EROSION CONTROL SHEETS (EC)	16-21
SIGNING & PAVEMENT MARKING (SN)	22-23
CULVERT SECTIONS (CS)	24
BRIDGE DRAWINGS (B)	
A9432	1-36
CROSS SECTIONS (XS)	1-26

LENGTH OF PROJECT

BEGINNING OF PROJECT	STA. 766 + 06.92	
END OF PROJECT	STA. 782 + 19.24	
APPARENT LENGTH	1612.32	FEET
EQUATIONS AND EXCEPTIONS:		
TOTAL CORRECTIONS	0.0	FEET
NET LENGTH OF PROJECT	1612.32	FEET
STATE LENGTH	0.305	MILES
FOR INFORMATION ONLY ESTIMATED DISTURBED ACRES	2.3	ACRES

Digitally signed by Grant Luckenbill
Date: 2025.08.06 11:09:46-05'00'

GRANT C. LUCKENBILL NUMBER PE-2012018100
6-25
GRANT C. LUCKENBILL—ENGINEER
MO# PE-2012018100

DATE PREPARED	
8/5/2025	
ROUTE 248	STATE MO
DISTRICT SW	SHEET NO. 1
COUNTY BARRY	
JOB NO. JSR0119	
CONTRACT ID.	
PROJECT NO.	
BRIDGE NO. A9432	

DATE	DESCRIPTION

IF A SEAL IS PRESENT ON THIS SHEET IT HAS BEEN ELECTRONICALLY SEALED AND DATED.

MISSOURI HIGHWAYS AND TRANSPORTATION COMMISSION
105 WEST CAPITOL
JEFFERSON CITY, MO 65102
1-888-ASK-MODOT (1-888-275-6636)

olsson
550 ST. LOUIS STREET
SPRINGFIELD, MO 65806
PHONE: 417.890.8802
CERTIFICATE OF AUTHORITY NO. 001592

NOTE:
CROSS SECTIONS AND EARTHWORK IN THIS PROJECT ARE BASED ON THE CONCRETE OPTION. CONTRACTOR IS RESPONSIBLE FOR MAKING ANY ADJUSTMENTS WITH NO EXTRA PAY IF ASPHALT OPTION IS USED.

SUBGRADE PROFILE AND CROSS SECTIONS ARE DESIGNED FOR THE THINNER PAVEMENT DESIGN. THE CONTRACTOR IS RESPONSIBLE FOR MAINTAINING THE PROFILE GRADE FOR EITHER PAVEMENT DESIGN WITH NO DIRECT PAY. CROSSROAD STRUCTURES ARE DESIGNED TO ACCOMMODATE A MINIMUM COVER BASED ON THE THICKER PAVEMENT DESIGN.

SEE TYPICAL SECTION SHEET 3 OF 3 FOR OPTIONAL PAVEMENT DESIGNS.

SEE STANDARD PLAN 401.00 FOR SAFETY EDGE DETAILS.

ASPHALT FACTORS	
MATERIAL	TONS/CY
PMBP (BP-1), PG64-22	1.948
PMBP (BASE), PG 64-22	1.943

TACK COAT APPLICATION RATE
0.10 GAL/YD² (UNDILUTED)

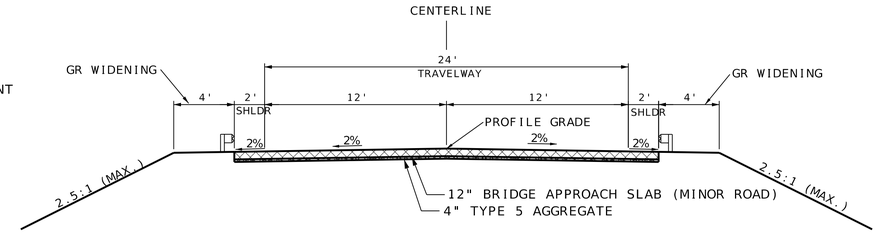

SECTION ON TANGENT
TYPICAL SECTION ROUTE 248

STA. 771+78.50 TO STA. 771+82.50 APPROACH SLAB
STA. 776+58.00 TO STA. 776+62.00 APPROACH SLAB

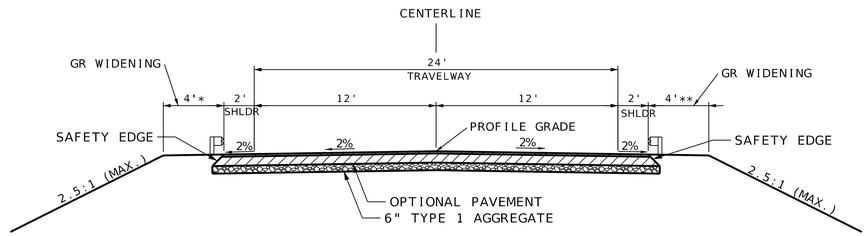

* TRANSITION 0.00' TO 4.00' FROM STA. 770+07.50 TO STA. 770+22.50
TRANSITION 4.00' TO 0.00' FROM STA. 779+18.00 TO STA. 779+33.00

SECTION ON TANGENT
TYPICAL SECTION ROUTE 248

STA. 770+68.61 TO STA. 771+78.50
STA. 776+62.00 TO STA. 777+75.00

** TRANSITION 0.00' TO 4.00' FROM STA. 769+07.50 TO STA. 769+22.50
TRANSITION 4.00' TO 0.00' FROM STA. 779+42.50 TO STA. 779+57.50

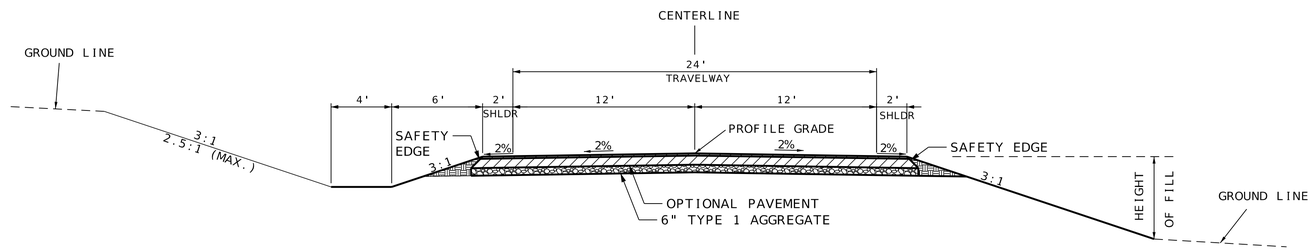

SECTION ON TANGENT
TYPICAL SECTION ROUTE 248
STA. 770+30.20 TO STA. 770+68.61

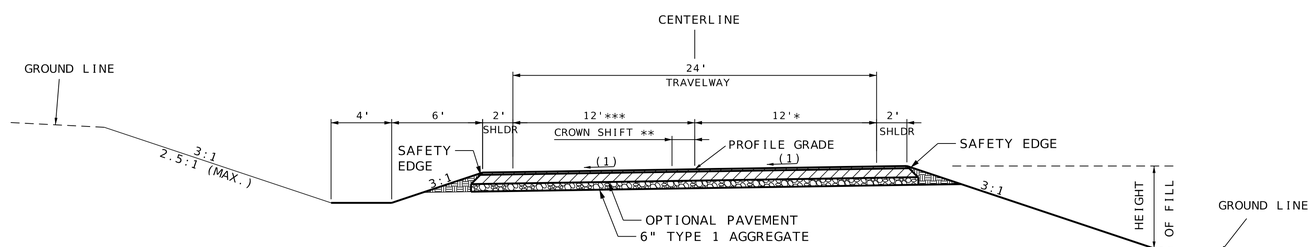

SECTION ON SUPERELEVATED CURVE
TYPICAL SECTION ROUTE 248
STA. 766+06.92 TO STA. 770+30.20

* TRANSITION 8.82' TO 12.00' FROM STA. 766+06.92 TO STA. 767+81.92

** CROWN SHIFT LEFT

TRANSITION 2.06' TO 0.00' FROM STA. 766+06.92 TO STA. 767+62.00

*** TRANSITION 13.00' TO 12.00' FROM STA. 766+06.92 TO STA. 767+81.92

(1) PAVEMENT CROSS SLOPE

LEFT	STATION	RIGHT
-10.64%	766+06.92	1.25%
- 7.54%	767+23.83	5.83%
- 7.60%	767+69.02	7.60%
- 7.60%	769+33.45	7.60%
- 2.00%	770+76.40	2.00%
- 2.00%	771+27.45	0.00%
- 2.00%	771+78.50	-2.00%

DAYLIGHTED TYPE 5 AGGREGATE
OPTIONAL PAVEMENT
AGGREGATE BASE
BRIDGE APPROACH SLAB

NOT TO SCALE

TYPICAL SHEET
1 OF 3

Digitally signed by Grant Luckenbill
Date: 2025.08.06 09:49:24-05'00'

GRANT C. LUCKENBILL
NUMBER
PE-2012018100
8-6-25
GRANT C. LUCKENBILL—ENGINEER
MO# PE-2012018100

DATE PREPARED
8/5/2025

ROUTE	STATE
248	MO
DISTRICT	SHEET NO.
SW	2

COUNTY
BARRY

JOB NO.
JSR0119

CONTRACT ID.

PROJECT NO.

BRIDGE NO.
A9432

DATE	DESCRIPTION

IF A SEAL IS PRESENT ON THIS SHEET IT HAS BEEN ELECTRONICALLY SEALED AND DATED.

MISSOURI HIGHWAYS AND TRANSPORTATION COMMISSION
105 WEST CAPITOL
JEFFERSON CITY, MO 65102
1-888-ASK-MODOT (1-888-275-6636)

olsson
550 ST. LOUIS STREET
SPRINGFIELD, MO 65806
PHONE: 417.890.8802
CERTIFICATE OF AUTHORITY NO. 001592

NOTE:
CROSS SECTIONS AND EARTHWORK IN THIS PROJECT ARE BASED ON THE CONCRETE OPTION. CONTRACTOR IS RESPONSIBLE FOR MAKING ANY ADJUSTMENTS WITH NO EXTRA PAY IF ASPHALT OPTION IS USED.

SUBGRADE PROFILE AND CROSS SECTIONS ARE DESIGNED FOR THE THINNER PAVEMENT DESIGN. THE CONTRACTOR IS RESPONSIBLE FOR MAINTAINING THE PROFILE GRADE FOR EITHER PAVEMENT DESIGN WITH NO DIRECT PAY. CROSSROAD STRUCTURES ARE DESIGNED TO ACCOMMODATE A MINIMUM COVER BASED ON THE THICKER PAVEMENT DESIGN.

SEE TYPICAL SECTION SHEET 3 OF 3 FOR OPTIONAL PAVEMENT DESIGNS.

SEE STANDARD PLAN 401.00 FOR SAFETY EDGE DETAILS.

ASPHALT FACTORS	
MATERIAL	TONS/CY
PMBP (BP-1), PG64-22	1.948
PMBP (BASE), PG 64-22	1.943

TACK COAT APPLICATION RATE
0.10 GAL/YD² (UNDILUTED)

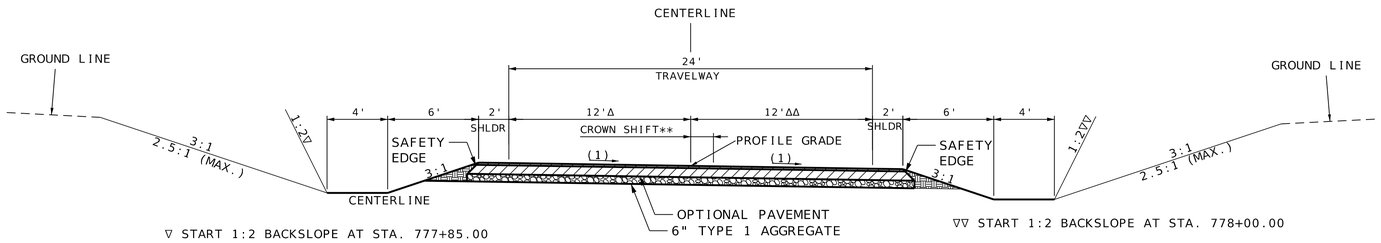

SECTION ON SUPERELEVATED CURVE
TYPICAL SECTION ROUTE 248
STA. 777+75.00 TO STA. 782+19.24

Δ TRANSITION 12.00' TO 7.03' FROM STA. 779+44.24 TO STA. 782+19.24

ΔΔ TRANSITION 12.00' TO 13.79' FROM STA. 779+44.24 TO STA. 782+19.24

** CROWN SHIFT RIGHT

TRANSITION 0.00' TO 2.52' FROM STA. 780+79.24 TO STA. 782+19.24

(1) PAVEMENT CROSS SLOPE

LEFT	STATION	RIGHT
-2.00%	777+87.32	-2.00%
0.00%	778+38.43	-2.00%
2.00%	778+89.54	-2.00%
7.20%	780+22.43	-7.20%
7.20%	781+18.55	-7.20%
4.06%	781+98.80	-6.77%
3.26%	782+19.24	-5.90%

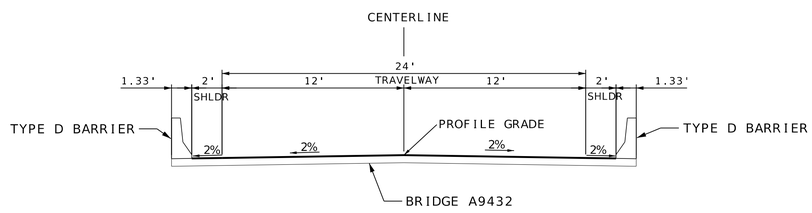

SECTION ON TANGENT
TYPICAL SECTION ROUTE 248
STA. 771+98.50 TO STA. 776+42.00

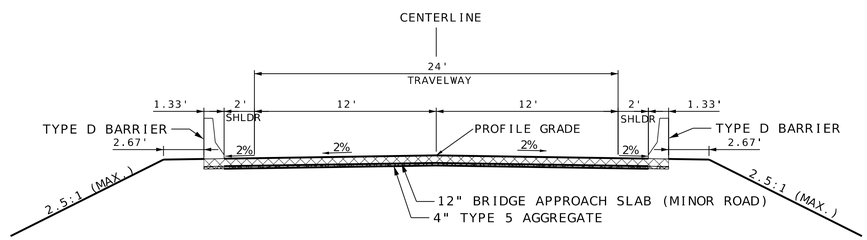

SECTION ON TANGENT
TYPICAL SECTION ROUTE 248

STA. 771+82.50 TO STA. 771+98.50 APPROACH SLAB
STA. 776+58.00 TO STA. 776+62.00 APPROACH SLAB

DAYLIGHTED TYPE 1 AGGREGATE
OPTIONAL PAVEMENT
AGGREGATE BASE
BRIDGE APPROACH SLAB

NOT TO SCALE

TYPICAL SHEET
2 OF 3

Digitally signed by Grant Luckenbill
Date: 2025.08.06 09:48:52-05'00'

GRANT C. LUCKENBILL
NUMBER
PE-2012018100
6-25
GRANT C. LUCKENBILL—ENGINEER
MO# PE-2012018100

DATE PREPARED	
8/5/2025	
ROUTE 248	STATE MO
DISTRICT SW	SHEET NO. 2
COUNTY BARRY	
JOB NO. JSR0119	
CONTRACT ID.	
PROJECT NO.	
BRIDGE NO. A9432	

DATE	DESCRIPTION

IF A SEAL IS PRESENT ON THIS SHEET IT HAS BEEN ELECTRONICALLY SEALED AND DATED.

MISSOURI HIGHWAYS AND TRANSPORTATION COMMISSION
105 WEST CAPITOL
JEFFERSON CITY, MO 65102
1-888-ASK-MODOT (1-888-275-6636)

olsson
550 ST. LOUIS STREET
SPRINGFIELD, MO 65806
PHONE: 417.890.8802
CERTIFICATE OF AUTHORITY NO. 001592

NOTE:
CROSS SECTIONS AND EARTHWORK IN THIS PROJECT ARE BASED ON THE CONCRETE OPTION. CONTRACTOR IS RESPONSIBLE FOR MAKING ANY ADJUSTMENTS WITH NO EXTRA PAY IF ASPHALT OPTION IS USED.

SUBGRADE PROFILE AND CROSS SECTIONS ARE DESIGNED FOR THE THINNER PAVEMENT DESIGN. THE CONTRACTOR IS RESPONSIBLE FOR MAINTAINING THE PROFILE GRADE FOR EITHER PAVEMENT DESIGN WITH NO DIRECT PAY. CROSSROAD STRUCTURES ARE DESIGNED TO ACCOMMODATE A MINIMUM COVER BASED ON THE THICKER PAVEMENT DESIGN.

SEE STANDAD PLAN 401.00 FOR SAFETY EDGE DETAILS.

ROUTE 248 OPTIONAL PAVEMENT DESIGN

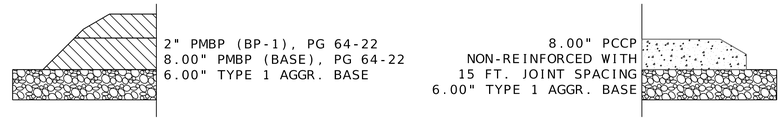

ASPHALT FACTORS	
MATERIAL	TONS/CY
PMBP (BP-1), PG64-22	1.948
PMBP (BASE), PG 64-22	1.943

TACK COAT APPLICATION RATE
0.10 GAL/YD² (UNDILUTED)

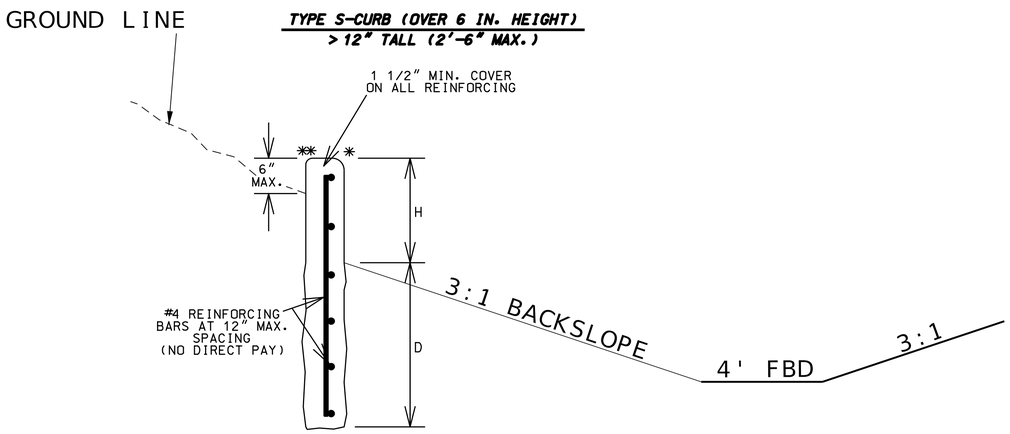

✳ ROUND TO 3/4" RADIUS
✳✳ ROUND TO 1/4" RADIUS
H = 2'-6" MAX. (30")
D = BURY DEPTH (FORMING NOT REQUIRED)
THIS SHALL BE 18 INCHES OR "H" WHICHEVER IS GREATER.
VERTICAL REINFORCING LENGTHS VARY AS NEEDED.
DEPTH MAY BE REDUCED IF KEYED 6" IN ROCK

STA. 769+02.66 TO STA. 769+25.32

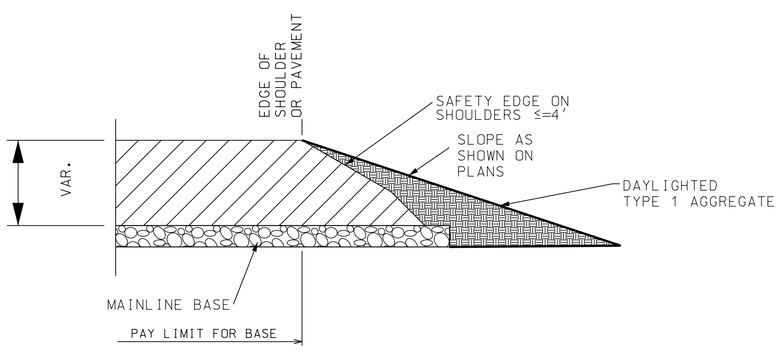

HMA PAVEMENT

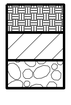

DAYLIGHTED TYPE 1 AGGREGATE
PMBP
MAINLINE BASE

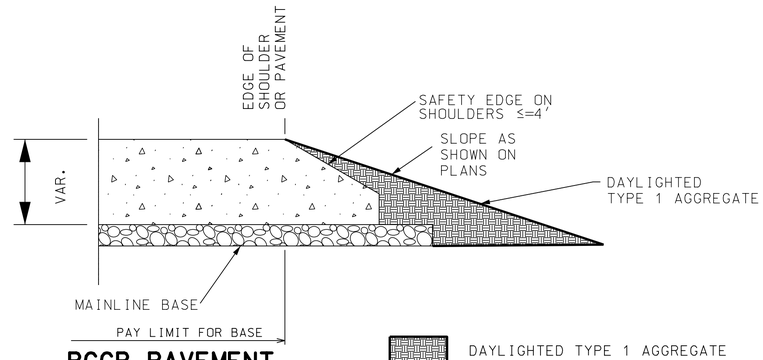

PCCP PAVEMENT

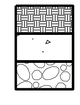

DAYLIGHTED TYPE 1 AGGREGATE
PCC (PORTLAND CEMENT CONCRETE)
MAINLINE BASE

GENERAL NOTE:

1. DAYLIGHTED TYPE 1 AGGREGATE WILL BE CONSIDERED INCIDENTAL TO THE MAINLINE BASE AND NO DIRECT PAYMENT.
2. SEE STANDARD PLAN 401.00 FOR SAFETY EDGE DETAILS.

DAYLIGHTED TYPE 1 AGGREGATE

NOT TO SCALE

TYPICAL SHEET
3 OF 3

Digitally signed by Grant Luckenbill
Date: 2025.08.06 09:49:15-05'00'

GRANT C. LUCKENBILL
NUMBER
PE-2012018100
6-25
GRANT C. LUCKENBILL-ENGINEER
MO# PE-2012018100

DATE PREPARED
8/5/2025

ROUTE	STATE
248	MO
DISTRICT	SHEET NO.
SW	2

COUNTY
BARRY

JOB NO.
JSR0119

CONTRACT ID.

PROJECT NO.

BRIDGE NO.
A9432

DATE	DESCRIPTION

MISSOURI HIGHWAYS AND TRANSPORTATION COMMISSION
105 WEST CAPITOL
JEFFERSON CITY, MO 65102
1-888-ASK-MODOT (1-888-275-6636)

olsson
550 ST. LOUIS STREET
SPRINGFIELD, MO 65806
PHONE: 417.890.8802
CERTIFICATE OF AUTHORITY NO. 001592

IF A SEAL IS PRESENT ON THIS SHEET IT HAS BEEN ELECTRONICALLY SEALED AND DATED.

REMOVAL OF IMPROVEMENTS

SHEET	STA.	STA.	LOCATION	DESCRIPTION
4	766+06.92		ROUTE 248	26' SAWCUT
4-5	767+26.42	772+07.29	ROUTE 248 LT	494' FENCE
4	769+37.03		ROUTE 248 LT	1 SIGN, 1 POST
4	767+66.49	768+06.39	ROUTE 248 RT	1 GATE, 2 CORNER POST, 23' FENCE
4-5	768+75.00	771+72.34	ROUTE 248 RT	303' FENCE
4	768+94.41		ROUTE 248 RT	1 SIGN, 1 POST
5	771+68.36		ROUTE 248 RT	1 SIGN, 1 POST
5	772+02.88		ROUTE 248 RT	1 SIGN, 1 POST
5	772+03.24		ROUTE 248 RT	1 SIGN, 1 POST
5	772+20.94		ROUTE 248 RT	1 SIGN, 1 POST
5	771+78.00		ROUTE 248 LT	20' X 24" CMP
5	772+01.96		ROUTE 248 LT	1 SIGN, 1 POST
5	772+21.00		ROUTE 248 LT	1 SIGN, 1 POST
6	775+90.20		ROUTE 248 LT	1 SIGN, 1 POST
6	776+08.58		ROUTE 248 LT	1 SIGN, 1 POST
6	776+10.15		ROUTE 248 LT	1 SIGN, 1 POST
6	776+27.00		ROUTE 248 LT	1 SIGN, 1 POST
6	775+95.26	776+90.05	ROUTE 248 LT	99' FENCE
6	775+90.64		ROUTE 248 RT	1 SIGN, 1 POST
6	776+10.03		ROUTE 248 RT	1 SIGN, 1 POST
6	777+91.74		ROUTE 248 RT	1 SIGN, 1 POST
6	778+61.19		ROUTE 248 LT	1 SIGN, 1 POST
6	775+85.00	778+75.00	ROUTE 248 RT	290' FENCE
7	782+19.24		ROUTE 248	25' SAWCUT
1 LUMP SUM				

OPTIONAL RUMBLE STRIPS

SHEET NO.	STA.	STA.	LOCATION	OPTIONAL RUMBLE STRIPS (STA)
4-5	766+06.92	771+78.5	ROUTE 248	5.7
6-7	776+62.00	782+19.24	ROUTE 248	5.6
			TOTAL	11.3

MGS GUARDRAIL

SHEET	STA.	OFF.	STA.	OFF.	LOCATION	MGS GUARDRAIL (LF)	TYPE A CRASHWORTHY END TERMINAL (MASH) (EACH)	MGS BRIDGE APPROACH TRANSITION (EACH)
4-5	770+32.50	14.00	771+82.50	14.00	ROUTE 248 LT	62.5	1	1
4-5	769+32.50	14.00	771+82.50	14.00	ROUTE 248 RT	162.5	1	1
6	776+58.00	14.00	779+08.00	14.00	ROUTE 248 LT	162.5	1	1
6	776+58.00	14.00	779+32.50	14.00	ROUTE 248 RT	187.5	1	1
					TOTALS	575	4	4

ENTRANCES

SHEET NO.	STA.	LOCATION	TYPE	WIDTH	RADIUS	1.75" PMBP (BP-1) (1.948 TON/CY) (TON)	4" PMBP (BASE) (1.943 TON/CY) (TON)	GRAVEL (A) OR CRUSHED STONE (B) (SY)
4	767+85.87	ROUTE 248 LT	I	20.0	10'			106
4	767+85.87	ROUTE 248 RT	I	20.0	10'			104
7	781+38.10	ROUTE 248 RT	I	VARIES	VARIES	14.1	32.2	
7	781+72.75	ROUTE 248 LT	I	VARIES	VARIES	14.8	33.6	
					TOTALS	28.9	68.8	210

SEEDING AND MULCH

SHEET NO.	STA.	OFF.	STA.	OFF.	LOCATION	COOL SEESON GRASS SEEDING (AC)	TEMP. SEED AND MULCH (AC)	MULCHING (AC)
20	766+06.92	15.00	767+75.37	59.63	ROUTE 248 LT	0.1		0.1
20	766+06.92	11.61	767+75.37	14.00	ROUTE 248 RT	0.1		0.1
20	767+95.36	59.63	771+79.00	14.00	ROUTE 248 LT	0.4	0.1	0.5
20	767+95.43	58.65	771+79.00	14.00	ROUTE 248 RT	0.3	0.1	0.4
20-21	776+61.50	14.00	781+45.63	20.81	ROUTE 248 LT	0.2	0.1	0.3
20-21	776+61.50	14.00	781+07.06	15.06	ROUTE 248 RT	0.4	0.1	0.5
21	781+35.90	49.31	782+19.24	9.06	ROUTE 248 LT	0.1		0.1
21	781+66.38	19.18	782+19.24	15.79	ROUTE 248 RT	0.1		0.1
					TOTALS	1.7	0.4	2.1

PIPE CULVERTS

PLAN SHEET NO.	STA.	LOCATION	GROUP A 18 IN. (FT.)	GROUP C 18 IN. (FT.)	GROUP A F.E.S. 18 IN. (EACH)	GROUP C F.E.S. 18 IN. (EACH)	CLASS 3 EXCAVATION (CY)
4	767+85.87	ROUTE 248 LT		26		2	9
4	767+85.87	ROUTE 248 RT		26		2	9
6	777+83.00	ROUTE 248	46		2		
		TOTAL	46	52	2	4	18

TYPE S CURB (OVER 6 IN. HEIGHT)

SHEET	STA.	OFF.	STA.	OFF.	LOCATION	TYPE S CURB (LF)
4	769+02.66	37.00	769+25.32	37.00	ROUTE 248 LT.	22.0
					TOTALS	22

EARTHWORK

STA.	STA.	LOC.	UNCLASSIFIED EXCAVATION (CY)	EMBANKMENT IN PLACE (CY)	COMPACTING EMBANKMENT (CY)	COMPACTING IN CUT (STA)	REMARKS
766+06.92	771+98.50	ROUTE 248	1581	2015	1265		
776+06.92	768+96.92	ROUTE 248				2.9	
776+42.00	782+19.24	ROUTE 248	714	7529	572		
779+29.24	782+19.24	ROUTE 248				2.9	
		TOTALS	2295	9544	1837	5.8	

ADDITIONAL MOBILIZATION FOR SEEDING
2 EACH

MOBILIZATION
1 LUMP SUM

CLEARING & GRUBBING
1 ACRE

CONTRACTOR FURNISHED SURVEYING & STAKING
1 LUMP SUM

SUMMARY OF QUANTITIES
SHEET 1 OF 4

Digitally signed by Grant Luckenbill
Date: 2025.09.25 14:38:48-05'00'

GRANT C. LUCKENBILL NUMBER PE-2012018100 MISSOURI 25-25
GRANT C. LUCKENBILL—ENGINEER
MO# PE-2012018100

DATE PREPARED 9/25/2025
ROUTE 248 | STATE MO
DISTRICT SW | SHEET NO. 3
COUNTY BARRY
JOB NO. JSR0119
CONTRACT ID.
PROJECT NO.
BRIDGE NO. A9432

DATE	DESCRIPTION

IF A SEAL IS PRESENT ON THIS SHEET IT HAS BEEN ELECTRONICALLY SEALED AND DATED.

MISSOURI HIGHWAYS AND TRANSPORTATION COMMISSION
105 WEST CAPITOL
JEFFERSON CITY, MO 65102
1-888-ASK-MODOT (1-888-275-6636)

olsson
550 ST. LOUIS STREET
SPRINGFIELD, MO 65806
PHONE: 417.890.8802
CERTIFICATE OF AUTHORITY NO. 001592

ROCK

SHEET	STA.	OFF.	STA.	OFF.	LOCATION	LENGTH (FT)	WIDTH (FT)	DEPTH (FT)	ROCK LINING (CY)	TYPE 2 ROCK DITCH LINER FURNISHING (CY)	TYPE 2 ROCK DITCH LINER PLACING (CY)	TYPE 2 ROCK BLANKET FURNISHING (CY)	TYPE 2 ROCK BLANKET PLACING (CY)	SEPARATION GEOTEXTILE (SY)	REMARKS
4	768+02.13	23.59	768+14.35	23.75	ROUTE 248 LT	12	4	1	2						INCLUDES TOEWALL
4	768+01.40	22.57	768+13.19	22.88	ROUTE 248 RT	12	4	1	2						INCLUDES TOEWALL
5	771+79.00		772+38.32		ROUTE 248	*	*	2				549	549	824	
6	775+89.78		776+61.50		ROUTE 248	*	*	2				779	779	1168	
6	776+61.50	70.87	777+87.00	61.83	ROUTE 248 RT	125.5	4	1	19						INCLUDES TOEWALL
6	777+83.00	24.13	777+87.00	24.13	ROUTE 248 RT	40	4	1		4	4				DRAIN FLUME
								TOTALS	23	4	4	1328	1328	1992	

* VARIES, SEE PLAN SHEETS.

TEMPORARY EROSION CONTROL

SHEET NO.	STA.	OFF.	STA.	OFF.	LOCATION	PHASE	ROCK DITCH CHECK (FT)	TYPE C BERM (FT)	SEDIMENT TRAP EXCAVATION (CY)	SEDIMENT TRAP ROCK (CY)	SILT FENCE (FT)	TURF REINFORCEMENT MAT TYPE 3 (SY)	EROSION CONTROL BLANKET TYPE 3B (SY)	SED. REM. (CY)
16	772+34.27	56.05			ROUTE 248 RT	INITIAL			5.0	5.0				
16	772+27.23	60.64			ROUTE 248 LT	INITIAL			5.0	5.0				
16	775+94.81	43.28			ROUTE 248 LT	INITIAL			5.0	5.0				
16	775+95.31	76.65			ROUTE 248 RT	INITIAL			5.0	5.0				
18	766+88.33	24.24			ROUTE 248 LT	CONSTRUCTION	8							1
18	767+66.93	24.27			ROUTE 248 RT	CONSTRUCTION	8							1
18	767+67.06	25.66			ROUTE 248 LT	CONSTRUCTION	8							1
18	768+61.18	26.48			ROUTE 248 RT	CONSTRUCTION	8							1
18	768+65.99	26.92			ROUTE 248 LT	CONSTRUCTION	8							1
18	769+98.68	22.34	771+78.78	35.53	ROUTE 248 RT	CONSTRUCTION					181			2
18	770+06.81	36.30	771+94.61	58.19	ROUTE 248 RT	CONSTRUCTION	56							7
18	770+07.70	24.22	771+78.70	36.59	ROUTE 248 LT	CONSTRUCTION					171			2
18	770+19.90	37.53	771+91.29	53.19	ROUTE 248 LT	CONSTRUCTION	40							5
18	771+78.50		772+38.33		ROUTE 248	CONSTRUCTION		254						
18	775+89.78		776+61.50		ROUTE 248	CONSTRUCTION		284						
18	776+45.83	75.36	780+85.18	36.36	ROUTE 248 RT	CONSTRUCTION	176							22
18	776+62.91	43.11	777+24.10	42.52	ROUTE 248 LT	CONSTRUCTION					61			1
18	776+61.90	85.70	777+82.63	31.47	ROUTE 248 LT	CONSTRUCTION					137			2
18-19	776+61.88	40.02	777+82.64	38.48	ROUTE 248 RT	CONSTRUCTION					121			2
19	777+87.27	38.47	781+03.85	24.63	ROUTE 248 RT	CONSTRUCTION					314			3
19	777+88.76	25.00	781+06.44	19.22	ROUTE 248 LT	CONSTRUCTION	104							13
19	781+74.00	30.38			ROUTE 248 RT	CONSTRUCTION	8							1
19	782+06	27.20			ROUTE 248 LT	CONSTRUCTION	8							1
20	766+06.92	15.00	767+75.37	59.63	ROUTE 248 LT	FINAL						77.1	222.5	
20	766+06.92	11.61	767+70.97	22.25	ROUTE 248 RT	FINAL						25.6	178.4	
20	767+96.36	59.63	771+79.00	14.00	ROUTE 248 LT	FINAL						168.9	1531.4	
20	767+95.43	58.65	771+79.00	14.00	ROUTE 248 RT	FINAL						164.8	1280.0	
20-21	776+61.50	14.00	781+45.63	20.81	ROUTE 248 LT	FINAL						157.6	864.1	
20-21	776+61.50	14.00	781+07.06	15.06	ROUTE 248 RT	FINAL						140.8	2001.3	
21	781+35.90	49.31	782+19.24	9.06	ROUTE 248 LT	FINAL							20.2	
21	781+66.38	19.18	782+19.24	15.79	ROUTE 248 RT	FINAL							4.7	
						TOTALS	432	538	20.0	20.0	985	734.8	6102.6	66

OPTIONAL PAVEMENT

SHEET	STA.	STA.	LOCATION	ROUTE 248 OPTION (SY)	6" TYPE 1 AGGREGATE BASE (SY)
4-5	766+06.92	771+78.50	ROUTE 248	1773.9	1774
6-7	776+62.00	782+19.24	ROUTE 248	1699	1699
			TOTALS	3472.9	3473

SUMMARY OF QUANTITIES
SHEET 2 OF 4

Digitally signed by Grant Luckenbill
Date: 2025.09.25 14:40:04-05'00'

GRANT C. LUCKENBILL NUMBER PE-2012018100
25-25
GRANT C. LUCKENBILL—ENGINEER
MO# PE-2012018100

DATE PREPARED 9/25/2025
ROUTE 248 | STATE MO
DISTRICT SW | SHEET NO. 3
COUNTY BARRY
JOB NO. JSR0119
CONTRACT ID.
PROJECT NO.
BRIDGE NO. A9432

DATE	DESCRIPTION

IF A SEAL IS PRESENT ON THIS SHEET IT HAS BEEN ELECTRONICALLY SEALED AND DATED.

MISSOURI HIGHWAYS AND TRANSPORTATION COMMISSION
105 WEST CAPITOL
JEFFERSON CITY, MO 65102
1-888-ASK-MODOT (1-888-275-6636)

olsson
550 ST. LOUIS STREET
SPRINGFIELD, MO 65806
PHONE: 417.890.8802
CERTIFICATE OF AUTHORITY NO. 001592

EFFECTIVE: 07-01-2024

SIGNS (902 SIGNAL SIGNS TABULATED ON D-37A SHEET)						CONCRETE FOOTINGS EMBEDDED	STRUCTURAL STEEL POSTS *						PIPE POSTS *					BACKING BARS **					U-CHANNEL POST	PERFORATED SQUARE STEEL TUBE													REMARKS AND OTHER REQUIRED ITEMS
																								2 IN. POST						2.5 IN. POST							
																											ANCHORS					ANCHORS			BREAK-AWAY ASSEMBLY	
SIGN NO.	SIGN SIZE	STATION	HORZ CLEAR IF NOT STD	LOCATION	SIGN DTL. SHT. NO.	ITEM NO. 9031010	POST DES NO.	POST NO.1	POST NO.2	POST NO.3	LBS PER FT	TOTAL ITEM NO. 9031210	PIPE SIZE	POST NO.1	POST NO.2	LBS PER FT	TOTAL ITEM NO. 9031220	2" X 3/8" BARS AT 2.55 LBS PER FT NO. EACH	LGTH	TOTAL	TOTAL	ITEM NO. 9031250A	POST NO.1	POST NO.2	TOTAL ITEM NO. 9031270A	DRIVEN 12 GA. ITEM NO. 9031271A	DRIVEN 7 GA. ITEM NO. 9031273A	CONCRETE 7 GA. ITEM NO. 9031274	POST NO.1	POST NO.2	TOTAL ITEM NO. 9031280	2.25" INSERT (6 FT) ITEM NO. 9031272A	DRIVEN 7 GA. ITEM NO. 9031281A	CONCRETE 7 GA. ITEM NO. 9031285	ITEM NO. 9031241	
						CY		LF	LF	LF		LBS	IN.	LF	LF		LBS		IN.	LF	LBS	LF	LF	LF	LF	EA	EA	EA	LF	LF	LF	EA	EA	EA	EA	
1	ASSEM	769+37.03		LT																									16		16	1		1	1	
2	12"X36"	781+97.14		RT																									16		16			1		
3	12"X36"	782+04.10		LT																									16		16			1		
4																																				
				SUBTOTAL																											48	1		3	1	
				TOTAL																	**										48	1		3	1	

STANDARD SIGN ASSEMBLIES

SIGN NUMBER	STATION	LOCATION	TYPE: OM3-R	W13-1P	W1-4R		
			SIGN DESCRIPTION, SIZES & NUMBER OF EACH				
1	769+37.03	LT		1	1		
2	781+97.14	RT	1				
3	782+04.10	LT	1				

SIGN SUMMARY

STANDARD SIGN OR SPECIAL SIGN NUMBER	SIGN DETAIL SHEET NO.	NO. EACH	SIZE, TYPE & SQUARE FEET: SIZE	FLAT SHEET SH ITEM NO. 9035004A	FLAT SHEET FLUORESCENT SHF * ITEM NO. 9035069A	STRUCTURAL ST ITEM NO. 9035011A	STRUCTURAL FLUORESCENT STF * ITEM NO. 9035071A
OM3-R	STD	2	12"X36"	6.0			
W13-1P	STD	1	24"X24"	4.0			
W1-4R	STD	1	36"X36"	9.0			
			TOTAL	19.0			

* ORANGE, YELLOW & YELLOW/GREEN

PAVEMENT MARKING

SHEET	STA.	STA.	LOCATION	CLASS 1 PAVEMENT MARKING PAINT 18-MIL, TYPE P BEADS: 4" WHITE (LF)	4" YELLOW (LF)	REMARKS
4-7	766+06.92	782+19.24	LT & RT	3225		EDGELINES
4-7	766+06.92	782+19.24	CL		3225	DOUBLE YELLOW CL
			TOTALS	3225	3225	

SUMMARY OF QUANTITIES
SHEET 3 OF 4

2025.08.06 10:30:34-05'00'
STATE OF MISSOURI
JADRIENNE S. RODELL-TIPTON
NUMBER PE-2021032725
PROFESSIONAL ENGINEER

THIS SHEET HAS BEEN SIGNED, SEALED AND DATED ELECTRONICALLY.

DATE PREPARED 8/6/2025
ROUTE 248 | STATE MO
DISTRICT SW | SHEET NO. 3
COUNTY BARRY
JOB NO. JSR0119
CONTRACT ID.
PROJECT NO.
BRIDGE NO. A9432

DESCRIPTION | DATE | REV.

MISSOURI HIGHWAYS AND TRANSPORTATION COMMISSION
105 WEST CAPITOL
JEFFERSON CITY, MO 65102
1-888-ASK-MODOT (1-888-275-6636)

POWELL CWM
ARCHITECTURE/ENGINEERING/SURVEYING
3200 S. State Route 291, Bldg. 1, Independence, MO 64057
816.373.4800 | powellcwm.com

Certificates of Authority
Architecture: MO 310 / KS 73
Engineering: MO 4 / KS 241
Land Surveying: MO 123 / KS 36

SIGN	SIZE IN.	AREA SQ.FT.	QTY EACH	TOTAL AREA SQ.FT.	QTY RELOC EACH	TOTAL RELOC SQ.FT.	SIGN NO.	DESCRIPTION
WARNING SIGNS								
WO1-1L	48X48	16.00						TURN (SYMBOL LEFT)
WO1-1R	48X48	16.00						TURN (SYMBOL RIGHT)
WO1-2L	48X48	16.00						CURVE (SYMBOL LEFT)
WO1-2R	48X48	16.00						CURVE (SYMBOL RIGHT)
WO1-3L	48X48	16.00						REVERSE TURN (SYMBOL LEFT)
WO1-3R	48X48	16.00						REVERSE TURN (SYMBOL RIGHT)
WO1-4L	48X48	16.00						REVERSE CURVE (SYMBOL LEFT)
WO1-4R	48X48	16.00						REVERSE CURVE (SYMBOL RIGHT)
WO1-4bL	48X48	16.00						DOUBLE ARROW REVERSE CURVE (SYMBOL LEFT)
WO1-4bR	48X48	16.00						DOUBLE ARROW REVERSE CURVE (SYMBOL RIGHT)
WO1-4cL	48X48	16.00						TRIPLE ARROW REVERSE CURVE (SYMBOL LEFT)
WO1-4cR	48X48	16.00						TRIPLE ARROW REVERSE CURVE (SYMBOL RIGHT)
WO1-6	60X30	12.50						HORIZONTAL ARROW (SYMBOL)
WO1-6a	72X36	18.00						HORIZ. ARROW (SYMBOL ON PERMANENT BARRICADE)
WO1-7	60X30	12.50						DOUBLE HEAD HORIZONTAL ARROW (SYMBOL)
WO1-7a	72X36	18.00						DOUBLE HEAD HORIZ. ARROW (SYMBOL ON PERM. BARR.)
WO1-8	18X24	3.00						CHEVRON (SYMBOL)
WO1-8a	30X36	7.50						CHEVRON (SYMBOL FOR DIVIDED HIGHWAYS)
WO3-1	48X48	16.00						STOP AHEAD (SYMBOL)
WO3-2	48X48	16.00						YIELD AHEAD (SYMBOL)
WO3-3	48X48	16.00						SIGNAL AHEAD (SYMBOL)
WO3-4	48X48	16.00						BE PREPARED TO STOP
WO3-5	48X48	16.00						SPEED LIMIT AHEAD
WO4-1L	48X48	16.00						MERGE (SYMBOL FROM LEFT)
WO4-1R	48X48	16.00						MERGE (SYMBOL FROM RIGHT)
WO4-1aL	48X48	16.00						MERGE (LEFT)
WO4-1aR	48X48	16.00						MERGE (RIGHT)
WO5-1	48X48	16.00						ROAD/BRIDGE/RAMP NARROWS
WO5-3	48X48	16.00						ONE LANE BRIDGE
WO5-5	48X48	16.00						NARROW LANES
WO6-1	48X48	16.00						DIVIDED HIGHWAY (SYMBOL)
WO6-2	48X48	16.00						DIVIDED HIGHWAY END (SYMBOL)
WO6-3	48X48	16.00						TWO WAY TRAFFIC (SYMBOL)
WO7-3a	30X24	5.00						NEXT XX MILES (PLAQUE)
WO8-1	48X48	16.00						BUMP
WO8-2	48X48	16.00						DIP
WO8-3	48X48	16.00						PAVEMENT ENDS
WO8-4	48X48	16.00						SOFT SHOULDER
WO8-5	48X48	16.00						SLIPPERY WHEN WET (SYMBOL)
WO8-6	48X48	16.00						TRUCK CROSSING
WO8-6c	48X48	16.00						TRUCK ENTRANCE
WO8-7	36X36	9.00						LOOSE GRAVEL
WO8-7a	36X36	9.00						FRESH OIL / LOOSE GRAVEL
WO8-9	48X48	16.00						LOW SHOULDER
WO8-11	48X48	16.00						UNEVEN LANES
WO8-12	48X48	16.00						NO CENTER LINE
WO8-15	48X48	16.00						GROOVED PAVEMENT
WO8-15P	30X24	5.00						MOTORCYCLE (PLAQUE)
WO8-17L	48X48	16.00						SHOULDER DROP-OFF (SYMBOL LEFT)
WO8-17R	48X48	16.00						SHOULDER DROP-OFF (SYMBOL RIGHT)
WO8-17P	30X24	5.00						SHOULDER DROP-OFF (PLAQUE)
W10-1	42RND.	9.62						RAILROAD CROSSING
WO12-1	24X24	4.00						DOUBLE DOWN ARROW (SYMBOL)
WO12-2	48X48	16.00						LOW CLEARANCE (SYMBOL)
WO12-2x	24X18	3.00						LOW CLEARANCE (PLAQUE)
WO12-2a	84X24	14.00						OVERHEAD LOW CLEARANCE (FEET AND INCHES)
WO12-4	120X60	50.00						LOW CLEARANCE XX FT XX IN XX MILES AHEAD
WO12-5	120X60	50.00						WIDTH RESTRICTION XX FT XX IN XX MILES AHEAD
WO13-1	30X30	6.25						ADVISORY SPEED (PLAQUE)
WO16-2	30X24	5.00	2	10.00				XXX FEET (PLAQUE)
WO16-3	30X24	5.00						X MILE (PLAQUE)
WO20-1	48X48	16.00	1	16.00				ROAD/BRIDGE/RAMP WORK AHEAD
WO20-2	48X48	16.00	4	64.00			18	DETOUR AHEAD
WO20-3	48X48	16.00	4	64.00			20	ROAD CLOSED AHEAD
WO20-4	48X48	16.00						ONE LANE ROAD AHEAD
WO20-5	48X48	16.00						RIGHT/CENTER/LEFT LANE CLOSED AHEAD
WO20-5a	48X48	16.00						2 RIGHT/CENTER/LEFT LANES CLOSED AHEAD
WO20-6a	48X48	16.00						RIGHT/CENTER/LEFT LANE CLOSED
WO20-7a	48X48	16.00						FLAGGER (SYMBOL)
WO21-2	36X36	9.00						FRESH OIL
WO21-5	48X48	16.00	1	16.00				SHOULDER WORK / SHOULDER WORK AHEAD
WO22-1	48X48	16.00						BLASTING ZONE AHEAD
WO22-2	42X36	10.50						TURN OFF 2-WAY RADIO AND PHONE
WO22-3	42X36	10.50						END BLASTING ZONE
GO22-1	21X15	2.19						WET PAINT (ARROW PIVOTS)

SIGN	SIZE IN.	AREA SQ.FT.	QTY EACH	TOTAL SQ.FT.	QTY RELOC EACH	TOTAL RELOC SQ.FT.	SIGN NO.	DESCRIPTION
GUIDE SIGNS								
E05-1	36X48	12.00						GORE EXIT
E05-2	48X36	12.00						EXIT OPEN
E05-2a	48X36	12.00						EXIT CLOSED
GO20-1	60X24	10.00						ROAD WORK NEXT XX MILES
GO20-2	48X24	8.00						END ROAD WORK
GO20-4	36X18	4.50						PILOT CAR FOLLOW ME
GO20-4a	42X30	8.75						PILOT CAR IN USE WAIT & FOLLOW
GO20-4a	18X12	1.50						PILOT CAR IN USE WAIT & FOLLOW
GO20-5aP	36X24	6.00						WORK ZONE (PLAQUE)
MO4-8a	24X18	3.00	2	6.00			52	END DETOUR
MO4-9L	48X36	12.00						DETOUR (LEFT)
MO4-9R	48X36	12.00						DETOUR (RIGHT)
MO4-9P	48X12	4.00						STREET NAME (PLAQUE)
MO4-10L	48X18	6.00						DETOUR ARROW (LEFT)
MO4-10R	48X18	6.00						DETOUR ARROW (RIGHT)
REGULATORY SIGNS								
R1-1	48X48	13.25						STOP
R1-2	48TRI.	6.93						YIELD
R1-2a	36X36	9.00						TO ONCOMING TRAFFIC (PLAQUE)
R1-3P	30X12	2.50						ALL WAY (PLAQUE)
R2-1	36X48	12.00						SPEED LIMIT XX
R3-1	48X48	16.00						NO RIGHT TURN (SYMBOL)
R3-2	48X48	16.00						NO LEFT TURN (SYMBOL)
R3-3	36X36	9.00						NO TURNS
R3-4	48X48	16.00						NO U-TURN (SYMBOL)
R3-7L	30X30	6.25						LEFT LANE MUST TURN LEFT
R3-7R	30X30	6.25						RIGHT LANE MUST TURN RIGHT
R4-1	36X48	12.00						DO NOT PASS
R4-2	36X48	12.00						PASS WITH CARE
R4-7a	36X48	12.00						KEEP RIGHT (HORIZONTAL ARROW)
R4-8a	36X48	12.00						KEEP LEFT (HORIZONTAL ARROW)
R5-1	30X30	6.25						DO NOT ENTER
R5-1a	36X24	6.00						WRONG WAY
R6-1L	54X18	6.75						ONE WAY ARROW (LEFT)
R6-1R	54X18	6.75						ONE WAY ARROW (RIGHT)
R6-2L	24X30	5.00						ONE WAY (LEFT)
R6-2R	24X30	5.00						ONE WAY (RIGHT)
R9-9	24X12	2.00						SIDEWALK CLOSED
R9-11L	24X18	3.00						SIDEWALK CLOSED AHEAD, (ARROW LEFT) CROSS HERE
R9-11R	24X18	3.00						SIDEWALK CLOSED AHEAD, (ARROW RIGHT) CROSS HERE
R10-6	24X36	6.00						STOP HERE ON RED (45^ ARROW)
R11-2	48X30	10.00	2	20.00			29	ROAD CLOSED
R11-3a	60X30	12.50	3	37.50			55	ROAD CLOSED XX MILES AHEAD LOCAL TRAFFIC ONLY
R11-4	60X30	12.50	1	12.50			55	ROAD CLOSED TO THRU TRAFFIC
CONST-3A	60X48	20.00						FINE SIGN
CONST-3X	56X12	4.67						SPEEDING/PASSING (PLATE)
MISCELLANEOUS SIGNS								
CONST-5	48X36	12.00						POINT OF PRESENCE
CONST-5	96X48	32.00						POINT OF PRESENCE
CONST-8	48X36	12.00						WORK ZONE NO PHONE ZONE
SPECIAL	36X78	19.50	9	175.50			50A	DETOUR RTE ASSY SIGN
SPECIAL	36X78	19.50	1	19.50			50B	DETOUR RTE ASSY SIGN
SPECIAL	36X78	19.50	2	39.00			50C	DETOUR RTE ASSY SIGN
SPECIAL	36X78	19.50	2	39.00			50D	DETOUR RTE ASSY SIGN
SPECIAL	36X78	19.50	2	39.00			50E	DETOUR RTE ASSY SIGN
SPECIAL	36X78	19.50	12	234.00			50F	DETOUR RTE ASSY SIGN
SPECIAL	36X78	19.50	1	19.50			50G	DETOUR RTE ASSY SIGN
SPECIAL	36X78	19.50					50H	DETOUR RTE ASSY SIGN
SPECIAL	36X78	19.50	5	97.50			50J	DETOUR RTE ASSY SIGN
SPECIAL	36X78	19.50	3	58.50			50K	DETOUR RTE ASSY SIGN
SPECIAL	96X48	32.00	2	64.00			56A	RTE CLOSED XX MILES AHEAD
SPECIAL	96X48	32.00	3	96.00			56B	RTE CLOSED AHEAD

616-10.05 CONSTRUCTION SIGNS	TOTAL 1128	
616-10.10 RELOCATED SIGNS		TOTAL

ITEM NUMBER	TOTAL QTY	EFFECTIVE: 07-01-2025 DESCRIPTION
6122008		IMPACT ATTENUATOR 40 MPH (SAND BARRELS)
6122009		IMPACT ATTENUATOR 45 MPH (SAND BARRELS)
6122010		IMPACT ATTENUATOR 50 MPH (SAND BARRELS)
6122012		IMPACT ATTENUATOR 55 MPH (SAND BARRELS)
6122014		IMPACT ATTENUATOR 60 MPH (SAND BARRELS)
6122017		IMPACT ATTENUATOR 65 MPH (SAND BARRELS)
6122019		IMPACT ATTENUATOR 70 MPH (SAND BARRELS)
6122020		REPLACEMENT SAND BARREL
6122030		IMPACT ATTENUATOR (RELOCATION)
6122040		WORK ZONE CRASH CUSHION (NARROW)
6122041		WORK ZONE CRASH CUSHION (RELOCATION)
6123001		TRUCK MOUNTED ATTENUATOR (TMA)
6161012	8	BUOYS (BOATS KEEP OUT)
6161013	6	BUOYS (NO WAKE)
6161014	4	SPECIAL SIGN ASSEMBLY (BOATS KEEP OUT)
6161020		CHANNELIZER (DRUM-LIKE)
6161022		CHANNELIZER (CONE)
6161025		CHANNELIZER (TRIM-LINE)
6161026		CHANNELIZER (VERTICAL PANEL)
6161030	11	TYPE 3 MOVEABLE BARRICADE
6161033		DIRECTION INDICATOR BARRICADE
6161040		FLASHING ARROW PANEL
6161047		TYPE 3 OBJECT MARKER
6161055		SEQUENTIAL FLASHING WARNING LIGHT
6161070		TUBULAR MARKER
6161095		RADAR SPEED ADVISORY SYSTEM
6161096		CHANGEABLE MESSAGE SIGN, COMMISSION FURNISHED/RETAINED
6161098A	4	CHANGEABLE MESSAGE SIGN WITHOUT COMM. INTERFACE, CONTRACTOR FURNISHED/RETAINED
6161099		CHANGEABLE MESSAGE SIGN WITH COMM. INTERFACE, CONTRACTOR FURNISHED/RETAINED
6162000A		WORK ZONE TRAFFIC SIGNAL SYSTEM
6162002		TEMPORARY LONG-TERM RUMBLE STRIPS
6173600D		TEMPORARY TRAFFIC BARRIER, CONTRACTOR FURNISHED/RETAINED
6173700B		TEMP. TRAFFIC BARRIER ANCHORED, CONTRACTOR FURNISHED/RETAINED
6173706		TEMP. TRAFFIC BARRIER STIFFNESS TRANSITION CONTRACTOR FURNISHED/RETAINED
6174000A		TEMP. TRAFFIC BARRIER HEIGHT TRANSITION, CONTRACTOR FURNISHED/RETAINED
6175010A		RELOCATING TEMPORARY TRAFFIC BARRIER
6175011B		RELOCATING TEMP. TRAFFIC BARRIER ANCHORED
6175013		RELOCATING TEMP. TRAFFIC BARRIER STIFFNESS
6175020A		RELOCATING TEMP. TRAFFIC BARRIER HEIGHT
6208064A		TEMPORARY RAISED PAVEMENT MARKER
9029400		TEMPORARY TRAFFIC SIGNALS
9029401		TEMPORARY TRAFFIC SIGNALS AND LIGHTING

SUMMARY OF QUANTITIES
SHEET 4 OF 4

2025.07.22 09:13:19-05'00'
STATE OF MISSOURI
JADRIENNE S. RODELL-TIPTON
NUMBER PE-2021032725
PROFESSIONAL ENGINEER

THIS SHEET HAS BEEN SIGNED, SEALED AND DATED ELECTRONICALLY.

DATE PREPARED 7/22/2025

ROUTE	STATE
248	MO
DISTRICT	SHEET NO.
SW	3

COUNTY BARRY

JOB NO. JSR0119

CONTRACT ID.

PROJECT NO.

BRIDGE NO. A9432

DATE	DESCRIPTION

MISSOURI HIGHWAYS AND TRANSPORTATION COMMISSION
105 WEST CAPITOL
JEFFERSON CITY, MO 65102
1-888-ASK-MODOT (1-888-275-6636)

POWELL CWM
ARCHITECTURE/ENGINEERING/SURVEYING
3200 S. State Route 291, Bldg. 1, Independence, MO 64057
816.373.4800 | powellcwm.com

Certificates of Authority
Architecture: MO 310 / KS 73
Engineering: MO 4 / KS 241
Land Surveying: MO 123 / KS 36

REV.

GENERAL NOTE:
THE APPROXIMATE LOCATION OF PROPERTY LINES AS SHOWN ON THE PLANS ARE BASED ON THE BEST INFORMATION AVAILABLE TO THE COMMISSION AT THIS TIME. THIS INFORMATION IS PROVIDED BY THE COMMISSION "AS-IS" AND THE COMMISSION EXPRESSLY DISCLAIMS ANY REPRESENTATION OR WARRANTY AS TO THE COMPLETENESS, ACCURACY, OR SUITABILITY OF THE INFORMATION FOR ANY USE.

RIGHT OF WAY LIMITS FOR THIS PROJECT EXTEND FROM STA. 767+00.00 TO STA. 778+75.00, A DISTANCE OF 0.22 MILES. TEMPORARY EASEMENT LIMITS FOR THIS PROJECT EXTEND FROM STA. 767+50.00 TO STA. 768+25.00, A DISTANCE OF 0.01 MILES.

ANY WORK INDICATED ON THE PLANS THAT EXTENDS BEYOND THE PROJECT LIMITS IS CONSIDERED INCIDENTAL TO AND A PART OF THE CONSTRUCTION OF THIS PROJECT.

ALL BEARINGS ARE BASED ON STATE PLANE BEARINGS, WEST ZONE.

ALL DRIVEWAY RADII ARE 10' UNLESS OTHERWISE MARKED.

SE¼ SW¼
SEC. 19
T24N R25W

01
HARMON, WALTER & FELICIA
7868 SF (0.18 AC) NEW R/W
1263 SF (0.03 AC) TEMP. ESM'T.
27.8 AC REMAINING

PI	763+44.91
PC	754+28.30
PT	770+17.20
Δ	71°30'0.2" (LT)
D	4°29'59.9"
L	1,588.90' (ARC)
T	916.61'
R	1,273.25'
SE	7.6%

BEGINS AT A POINT APPROX. 3481.95' WEST & 382.28' NORTH OF THE SOUTHEAST CORNER OF SECTION 19, T24N R25W.

SOUTHEAST CORNER OF SECTION 19, T24N R25W 3503.30', N82°34'16"W DOCUMENT #600-47555

TYPE I DRWY. LT.
STA. 767+85.87
W= 20'
GRADE= 10%
18" X 26' GR. C PIPE (18")
2-18" GR. C F.E.S.
GRAVEL (A) OR CRUSHED STONE (B) SURFACE

EXIST. PERM. ELECTRIC & TELECOMMUNICATIONS ESMT.

TYPE S CURB (OVER 6 IN. HEIGHT) SEE DETAIL ON TYPICAL SECTION SHEET 3 OF 3.

PROPOSED R/W

TEMP. CONST. ESMT.

TEMP ESMT +50.00 65.00'
TEMP ESMT +50.00 45.24'
TEMP ESMT +25.00 65.00'
TEMP ESMT +25.00 49.49'
PROP R/W +00.00 40.00'
PROP R/W +55.00 50.00'
S-CURB STA. 769+02.66 OFF. 37.00'
S-CURB STA. 769+25.32 OFF. 37.00'
PROP R/W +00.00 60.00'
PROP R/W +17.20 61.75'
PT STA 770+17.20
EX R/W +17.20 40.00'
EOS STA. 770+17.20 OFF. 14.00'
770

EOS STA. 766+06.92 OFF. 15.00'
EOS STA. 766+06.92 OFF. 10.82'
EOS STA. 767+81.92 OFF. 14.00'
EOS STA. 770+17.20 OFF. 14.00'

R 1233.25'
R 1261.3'
R 1259.3'
R 1285.3'
R 1287.3'
R 1313.25'
R 1323.3'

BEGIN PROJECT
STA. 766+06.92

SAWCUT

4' FBD
SL
(R) FENCE
ROCK LINING L12'XW4'XD1'
(R) SIGN
EX. EOP
EOP
EOS
(R) FENCE & GATE POST
PROPOSED R/W
EXIST. R/W
℄ ROUTE 248
N48°26'48"E
MATCHLINE STA. 770+40.00

TEMP ESMT +60.00 40.00'
TEMP ESMT +60.00 65.00'
TEMP ESMT +15.00 65.00'
TEMP ESMT +15.00 40.00'
PROP R/W +75.00 40.00'
PROP R/W +75.00 50.00'
PROP R/W +17.20 50.00'
EOS STA. 770+17.20 OFF. 14.00'

TYPE I DRWY. RT.
STA. 767+85.87
W= 20'
GRADE= 3.10%
18"x 26' GR. C PIPE (18")
2-18" GR. C F.E.S.
GRAVEL (A) OR CRUSHED STONE (B) SURFACE

02
LONG, MITCHELL & ETALS
4128 SF (0.10 AC) NEW R/W
1420 SF (0.03 AC) TEMP. ESM'T.
7.3 AC REMAINING

¼ ¼ LINE
SECTION LINE

SCALE
0 20 40 60

PLAN SHEET
SHEET 1 OF 5

Digitally signed by Grant Luckenbill
Date: 2025.08.06 09:52:10-05'00'

GRANT C. LUCKENBILL
NUMBER PE-2012018100
8-6-25
GRANT C. LUCKENBILL—ENGINEER
MO# PE-2012018100

DATE PREPARED
8/5/2025

ROUTE	STATE
248	MO
DISTRICT	SHEET NO.
SW	4

COUNTY
BARRY

JOB NO.
JSR0119

CONTRACT ID.

PROJECT NO.

BRIDGE NO.
A9432

DATE	DESCRIPTION

IF A SEAL IS PRESENT ON THIS SHEET IT HAS BEEN ELECTRONICALLY SEALED AND DATED.

MISSOURI HIGHWAYS AND TRANSPORTATION COMMISSION
105 WEST CAPITOL
JEFFERSON CITY, MO 65102
1-888-ASK-MODOT (1-888-275-6636)

olsson
550 ST. LOUIS STREET
SPRINGFIELD, MO 65806
PHONE: 417.890.8802
CERTIFICATE OF AUTHORITY NO. 001592

F:\2023\04001-04500\023-04082\40-Design\Microstation\JSR0119\023-04082_JSR0119\plan_sheets\04 Plan Profile\004_PP_01_JSR0119_120.dgn 6:00:58 AM 8/5/2025

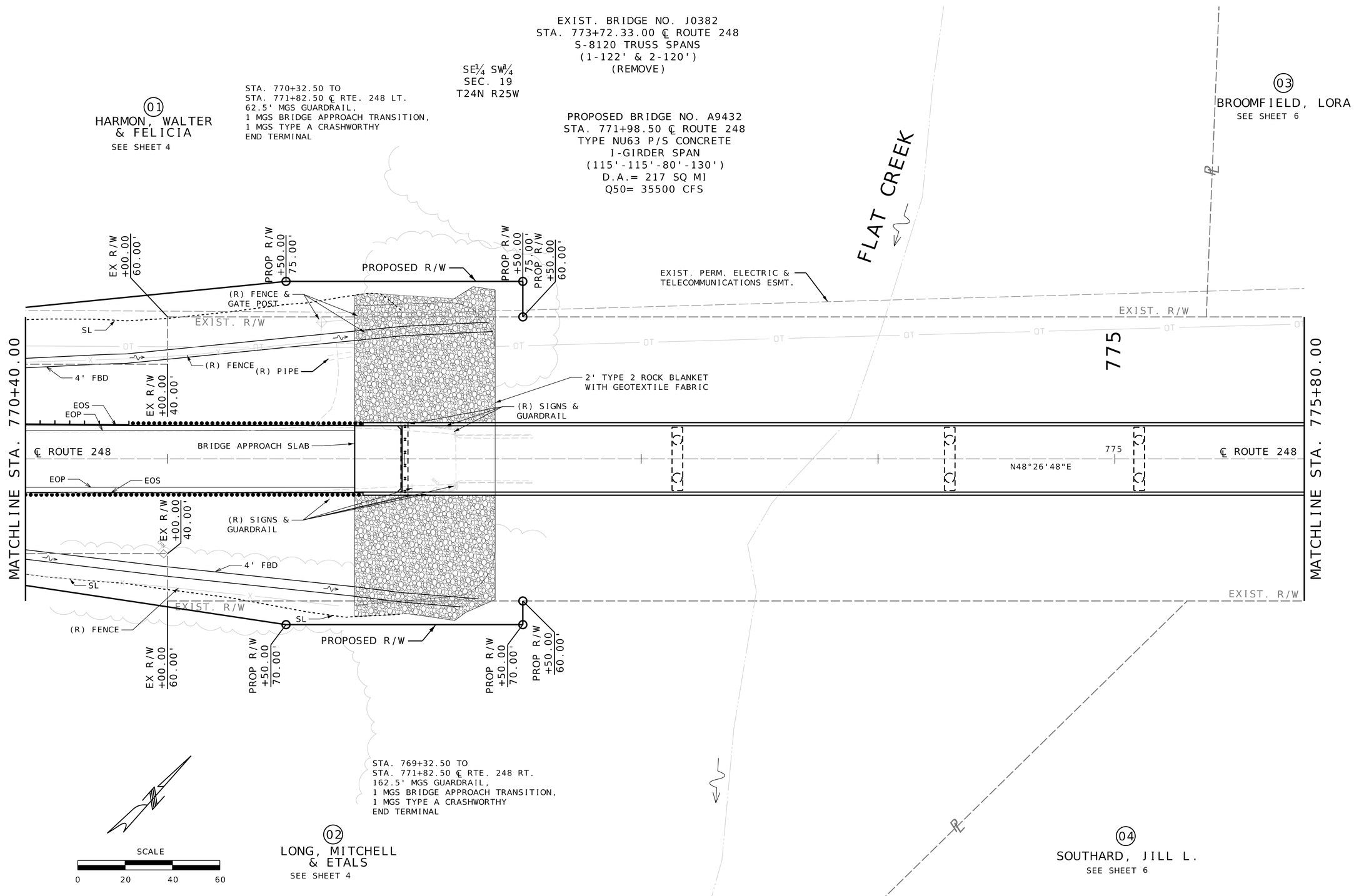

PLAN SHEET
SHEET 2 OF 5

Digitally signed by Grant Luckenbill
Date: 2025.08.06 09:51:54-05'00'

GRANT C. LUCKENBILL
NUMBER
PE-2012018100
8-6-25

GRANT C. LUCKENBILL—ENGINEER
MO# PE-2012018100

DATE PREPARED	
8/5/2025	
ROUTE	STATE
248	MO
DISTRICT	SHEET NO.
SW	5
COUNTY	
BARRY	
JOB NO.	
JSR0119	
CONTRACT ID.	
PROJECT NO.	
BRIDGE NO.	
A9432	

DATE	DESCRIPTION

MISSOURI HIGHWAYS AND TRANSPORTATION COMMISSION
105 WEST CAPITOL
JEFFERSON CITY, MO 65102
1-888-ASK-MODOT (1-888-275-6636)

IF A SEAL IS PRESENT ON THIS SHEET IT HAS BEEN ELECTRONICALLY SEALED AND DATED.

olsson
550 ST. LOUIS STREET
SPRINGFIELD, MO 65806
PHONE: 417.890.8802
CERTIFICATE OF AUTHORITY NO. 001592

F:\2023\04001-04500\023-04082\40-Design\Microstation\JSR0119\023-04082_JSR0119\plan_sheets\04 Plan Profile\005_PP_02_JSR0119_I20.dgn 6:01:00 AM 8/5/2025

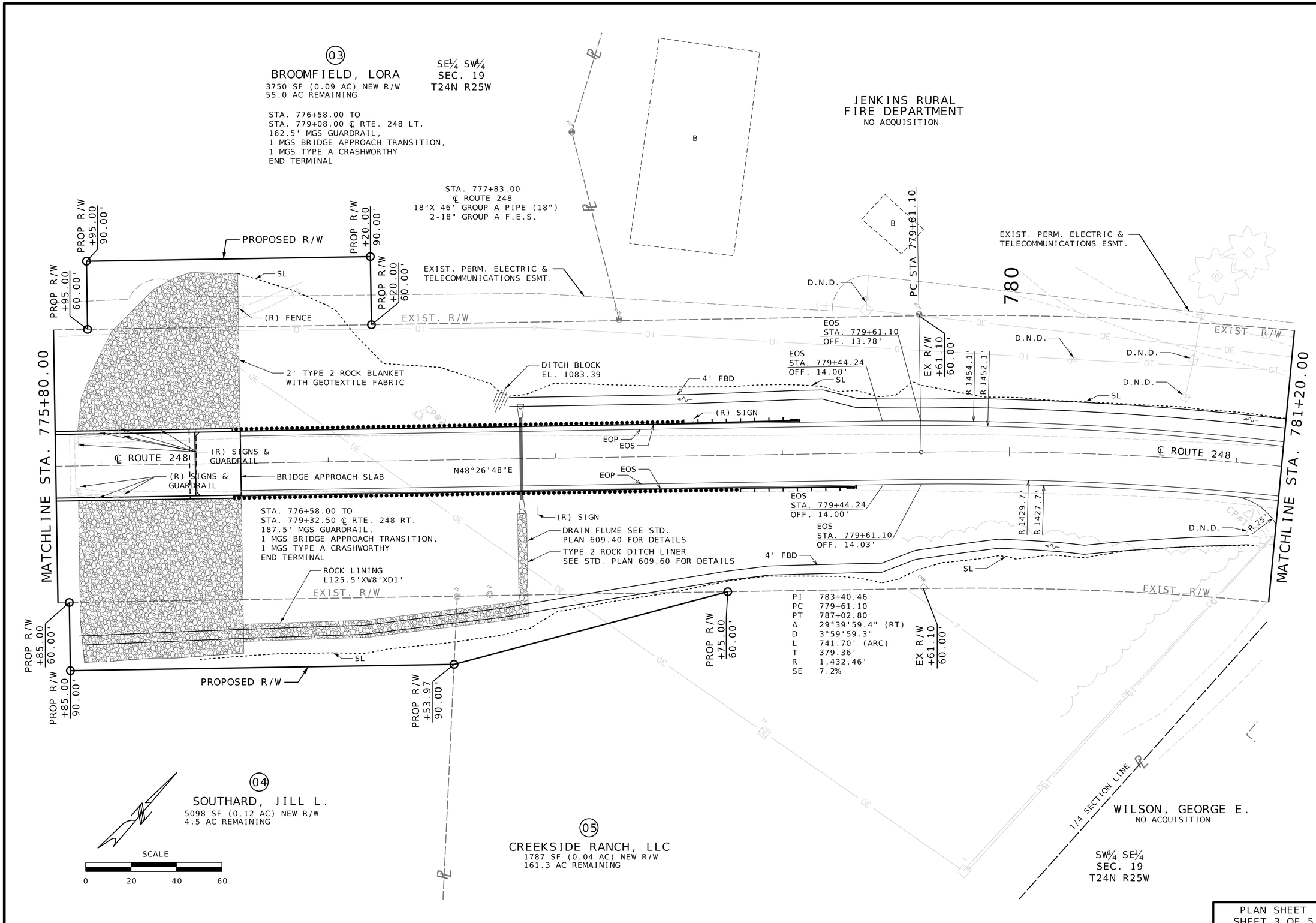

PLAN SHEET
SHEET 3 OF 5

Digitally signed by Grant Luckenbill
Date: 2025.09.25 14:39:08-05'00'

GRANT C. LUCKENBILL NUMBER PE-2012018100
9-25-25
GRANT C. LUCKENBILL—ENGINEER
MO# PE-2012018100

DATE PREPARED	
9/25/2025	
ROUTE 248	STATE MO
DISTRICT SW	SHEET NO. 6
COUNTY BARRY	
JOB NO. JSR0119	
CONTRACT ID.	
PROJECT NO.	
BRIDGE NO. A9432	

DATE	DESCRIPTION

MISSOURI HIGHWAYS AND TRANSPORTATION COMMISSION
105 WEST CAPITOL
JEFFERSON CITY, MO 65102
1-888-ASK-MODOT (1-888-275-6636)

olsson
550 ST. LOUIS STREET
SPRINGFIELD, MO 65806
PHONE: 417.890.8802
CERTIFICATE OF AUTHORITY NO. 001592

IF A SEAL IS PRESENT ON THIS SHEET IT HAS BEEN ELECTRONICALLY SEALED AND DATED.

F:\2023\04001-04500\023-04082\40-Design\Microstation\JSR0119\023-04082_JSR0119\plan_sheets\04 Plan Profile\006_PP_03_JSR0119_I20.dgn 1:49:47 PM 9/25/2025

JENKINS RURAL
FIRE DEPARTMENT
NO ACQUISITION

SE¼ SW¼
SEC. 19
T24N R25W

JENKINS RURAL
FIRE DEPARTMENT
NO ACQUISITION

NW¼ SE¼
SEC. 19
T24N R25W

TYPE I DRWY. LT.
STA. 781+72.75
W= VARIES
GRADE= 0.64%
ASPHALT SURFACE

EXIST. PERM. ELECTRIC &
TELECOMMUNICATIONS ESMT.

¼ SEC. LINE

STA. 782+00.00
℄ ROUTE 248
EXISTING
3'X 4' RCB
(U.I.P.)

R 1492.46'

785

EXIST. R/W

D.N.D.

(U.I.P.)

SL

D.N.D.

EOS
STA. 782+19.24
OFF. 9.03'

END PROJECT
STA. 782+19.24

EX. EOP

(R) SIGN

R 10'

EOS

EOP

MATCHLINE STA. 781+20.00

℄ ROUTE 248

SAWCUT

SL

(U.I.P.)

EX. EOP

EOP

EOS

R 25'

(R) SIGN

D.N.D.

EOS
STA. 782+19.24
OFF. 15.79'

(U.I.P.)

60'

60'

℄ ROUTE 248

¼ SEC. LINE

EXIST. R/W

R 1372.46'

EXIST. R/W

EXIST. R/W

PI 783+40.46
PC 779+61.10
PT 787+02.80
Δ 29°39'59.4" (RT)
D 3°59'59.3"
L 741.70' (ARC)
T 379.36'
R 1,432.46'
SE 7.2%

TYPE I DRWY. RT.
STA. 781+38.10
W= VARIES
EXIST. 42" PIPE (U.I.P.)
ASPHALT SURFACE

SW¼ SE¼
SEC. 19
T24N R25W

CREEKSIDE RANCH, LLC
NO ACQUISITION

WILSON, GEORGE E.
NO ACQUISITION

SCALE
0 20 40 60

PLAN SHEET
SHEET 4 OF 5

Digitally signed by Grant Luckenbill
Date: 2025.09.25 14:39:29-05'00'

GRANT C. LUCKENBILL
NUMBER
PE-2012018100
25-25

GRANT C. LUCKENBILL—ENGINEER
MO# PE-2012018100

DATE PREPARED	
9/25/2025	
ROUTE	STATE
248	MO
DISTRICT	SHEET NO.
SW	7
COUNTY	
BARRY	
JOB NO.	
JSR0119	
CONTRACT ID.	
PROJECT NO.	
BRIDGE NO.	
A9432	

DATE	DESCRIPTION

IF A SEAL IS PRESENT ON THIS SHEET IT HAS BEEN ELECTRONICALLY SEALED AND DATED.

MISSOURI HIGHWAYS AND TRANSPORTATION COMMISSION
105 WEST CAPITOL
JEFFERSON CITY, MO 65102
1-888-ASK-MODOT (1-888-275-6636)

MoDOT

olsson
550 ST. LOUIS STREET
SPRINGFIELD, MO 65806
PHONE: 417.890.8802
CERTIFICATE OF AUTHORITY NO. 001592

F:\2023\04001-04500\023-04082\40-Design\Microstation\JSR0119\023-04082_JSR0119\plan_sheets\04 Plan Profile\007_PP_04_JSR0119_I20.dgn 1:49:50 PM 9/25/2025

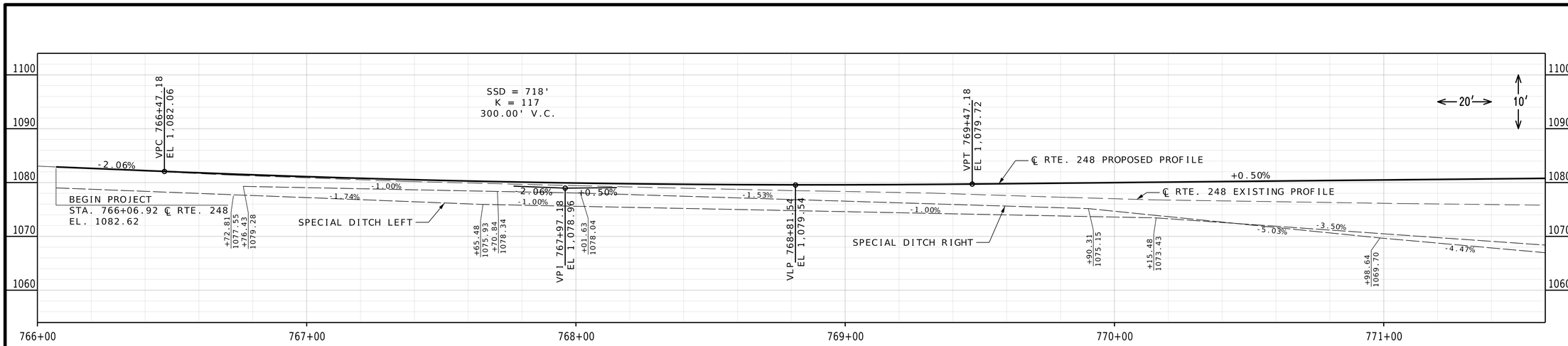

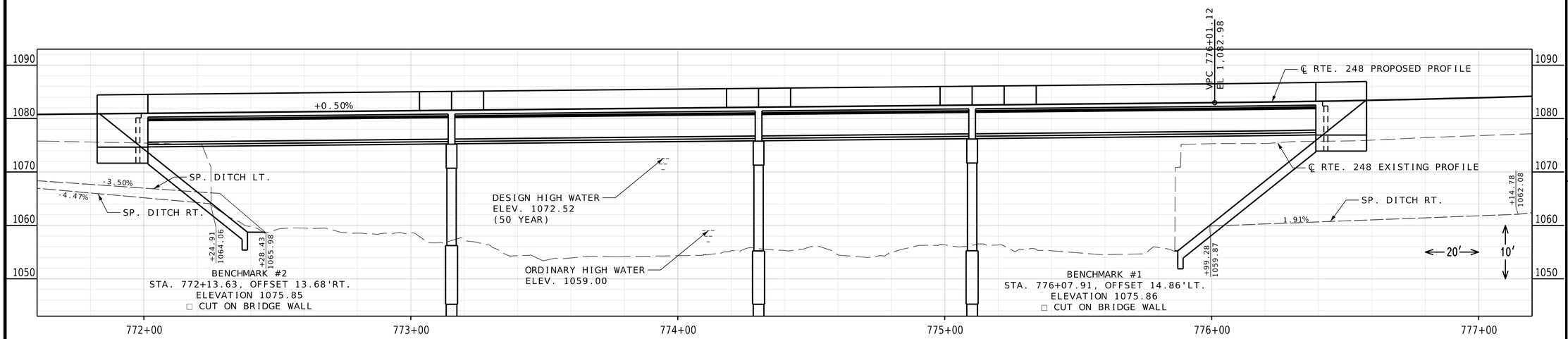

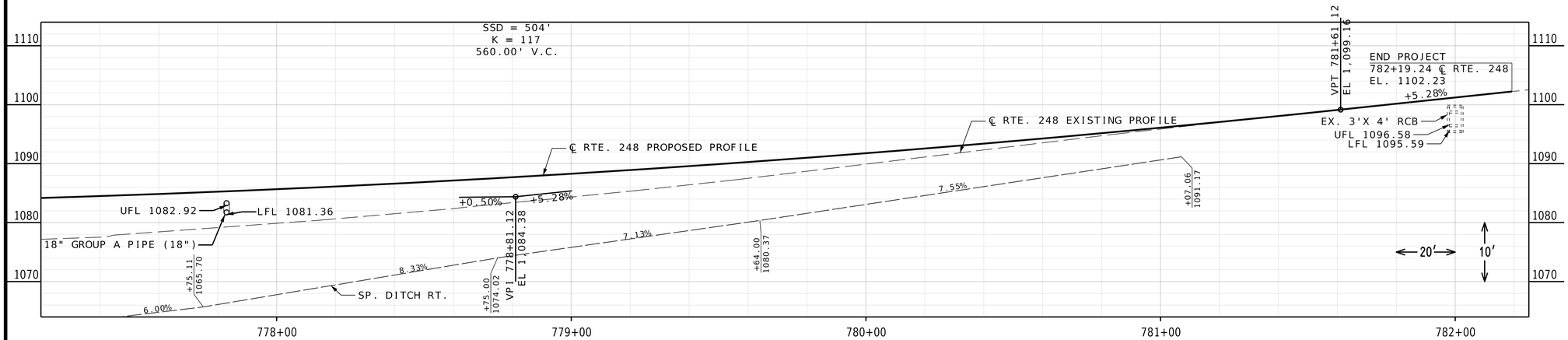

PLAN SHEET
SHEET 5 OF 5

Digitally signed by Grant Luckenbill
Date: 2025.08.06 09:50:55-05'00'

GRANT C. LUCKENBILL
NUMBER
PE-2012018100
8-6-25
GRANT C. LUCKENBILL—ENGINEER
MO# PE-2012018100

DATE PREPARED	
8/5/2025	
ROUTE 248	STATE MO
DISTRICT SW	SHEET NO. 8
COUNTY BARRY	
JOB NO. JSR0119	
CONTRACT ID.	
PROJECT NO.	
BRIDGE NO. A9432	

DESCRIPTION	DATE

IF A SEAL IS PRESENT ON THIS SHEET IT HAS BEEN ELECTRONICALLY SEALED AND DATED.

MISSOURI HIGHWAYS AND TRANSPORTATION COMMISSION
105 WEST CAPITOL
JEFFERSON CITY, MO 65102
1-888-ASK-MODOT (1-888-275-6636)

olsson
550 ST. LOUIS STREET
SPRINGFIELD, MO 65806
PHONE: 417.890.8802
CERTIFICATE OF AUTHORITY NO. 001592

ALL PROJECT COORDINATES HAVE BEEN PROJECTED FROM THE MISSOURI STATE PLANE COORDINATE (SPC) SYSTEM OF 1983 USING AN AVERAGE PROJECT PROJECTION (GRID TO GROUND) FACTOR. TO GET BACK TO STATE PLANE COORDINATES MULTIPY THE PROJECT COORDINATES BY THE AVERAGE GRID FACTOR AS SHOWN IN THE "REFERENCE CONTROL INFORMATION" PORTION OF THIS TABLE.

PROJECT COORDINATE INFORMATION

COORDINATE SYSTEM	STATE PLANE, MISSOURI WEST
HORIZONTAL DATUM	NAD 1983
VERTICAL DATUM	NAVD 1988
GEOID MODEL	BARRY COUNTY
ELEVATIONS DETERMINED BY	GPS OBSERVATIONS-MODOT RTN 2011
PROJECT PROJECTION FACTOR	1.00003880

REFERENCE CONTROL INFORMATION

COORDINATE SYSTEM	NAD83
CONTROL STATION	N/A
DESIGNATION	MODOT MONETT CORS ARP
CORS_ID	MOMO
PID	DM4682
LATITUDE	36°55'0.4861"
LONGITUDE	93°58'59.01551"
NORTHING (M)	83361.708
EASTING (M)	896061.257
ZONE	WEST
PROJECT AVERAGE GRID FACTOR	0.99996120

EXAMPLE OF PROJECT COORDINATE TO S.P.C.

PROJECT NORTHING X AVERAGE GRID FACTOR
= STATE PLANE NORTHING
PROJECT EASTING X AVERAGE GRID FACTOR
= STATE PLANE EASTING

EXAMPLE: CONTROL POINT #1
N 220930.3613 X 0.9999612 = N 220921.7892
E 3030699.3257 X 0.9999612 = E 3030581.7346

LINEAR UNIT CONVERSION

1 METER = 3.280833333 US SURVEY FEET (USFT)

COORDINATE POINT LISTING

SHEET NO	STATION	LOCATION	OFFSET (USFT)	MODIFIED STATE PLANE (GROUND) NORTHING (US SURVEY FT)	EASTING (US SURVEY FT)	ELEVATION (US SURVEY FT)	DESCRIPTION	GPK POINT ID
PROJECT CONTROL POINTS								
6	781+07.71	RTE 248	22.31	220930.3613	3030699.3257	1094.706	CONTROL POINT #1 - 5/8" REBAR	
6	777+40.36	RTE 248	-20.13	220725.6579	3030393.2672	1076.750	CONTROL POINT #2 - 5/8" REBAR	
5	771+91.28	RTE 248	-19.20	220360.7420	3029982.9895	1074.700	CONTROL POINT #3 - 5/8" REBAR	
6	776+07.91	RTE 248	-14.86	220633.8551	3030297.6551	1075.860	BM#1 - SQUARE CUT ON BRIDGE WALL	
5	772+13.63	RTE 248	13.68	220350.9658	3030021.5207	1075.850	BM#2 - SQUARE CUT ON BRIDGE WALL	
ALIGNMENTS								
ROUTE 248								
	754+00.00	℄		220094.597	3028360.769		BEGIN ALIGNMENT	
	754+28.30	℄		220080.470	3028385.290		PC CURVE	
	763+44.91	RT	295.616	219622.905	3029179.524		PI CURVE Δ=71°30'0.2" LT.	
				221183.730	3029020.888		CC CURVE	
4	770+17.20	℄		220230.909	3029865.458		PT CURVE	
6	779+61.10	℄		220857.013	3030571.811		PC CURVE	
7	783+40.46	LT	49.382	221108.651	3030855.702		PI CURVE Δ=29°39'59.4" RT.	
				219785.050	3031521.988		CC CURVE	
	787+02.80	℄		221186.792	3031226.929		PT CURVE	
	789+02.60	℄		221227.947	3031422.444		END ALIGNMENT	

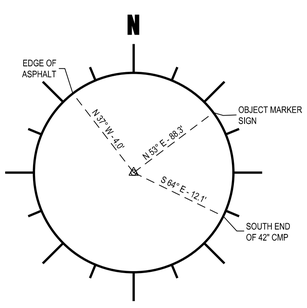

MoDOT CP #1 -5/8" REBAR
STA. 781+07.71, 22.31' RT.
N 220930.3613
E 3030699.3257
ELEVATION = 1094.71

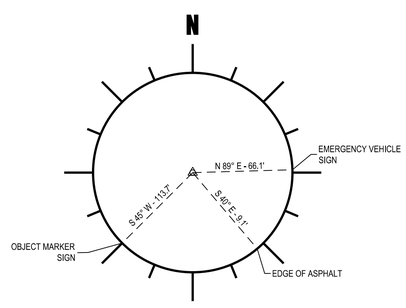

MoDOT CP #2 -5/8" REBAR
STA. 777+40.36, 20.13' LT.
N 220725.6579
E 3030393.2672
ELEVATION = 1076.75

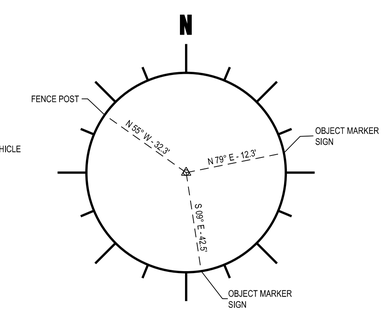

MoDOT CP #3 -5/8" REBAR
STA. 771+91.28, 19.20' LT.
N 220360.8551
E 3029982.9895
ELEVATION = 1074.70

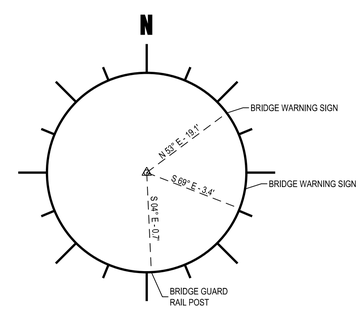

MoDOT BM #1
STA. 776+07.92, 14.86, LT.
N 220633.8551
E 3030297.6551
ELEVATION = 1075.86

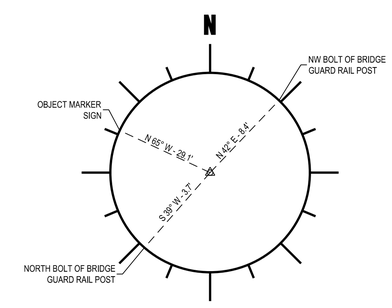

MoDOT BM #2
STA. 772+13.63, 13.68' RT.
N 220350.9658
E 3030021.5207
ELEVATION = 1075.85

COORDINATE POINT SHEET
SHEET 1 OF 1

Digitally signed by Grant Luckenbill
Date: 2025.08.06 09:51:30-05'00'

GRANT C. LUCKENBILL NUMBER PE-2012018100

8-6-25

GRANT C. LUCKENBILL—ENGINEER
MO# PE-2012018100

DATE PREPARED	8/5/2025
ROUTE	248
STATE	MO
DISTRICT	SW
SHEET NO.	9
COUNTY	BARRY
JOB NO.	JSR0119
CONTRACT ID.	
PROJECT NO.	
BRIDGE NO.	A9432

DATE	DESCRIPTION

MISSOURI HIGHWAYS AND TRANSPORTATION COMMISSION
105 WEST CAPITOL
JEFFERSON CITY, MO 65102
1-888-ASK-MODOT (1-888-275-6636)

olsson
550 ST. LOUIS STREET
SPRINGFIELD, MO 65806
PHONE: 417.890.8802
CERTIFICATE OF AUTHORITY NO. 001592

IF A SEAL IS PRESENT ON THIS SHEET IT HAS BEEN ELECTRONICALLY SEALED AND DATED.

GENERAL NOTES:

1. AS WITH ALL CONSTRUCTION ACTIVITIES TRAFFIC SITUATIONS ARE SUBJECT TO CHANGE. THE CONTRACTOR SHALL BE AWARE THAT ALL TEMPORARY TRAFFIC CONTROL SHALL CONFORM TO THE STANDARDS OTLINED IN THE MANUAL ON UNIFORM TAFFIC CONTROL DEVICES (M.U.T.C.D.) THE MISSOURI STANDARD PLANS FOR HIGHWAY CONSTRUCTION, SECTION 600 AND SHALL FOLLOW THE GUIDELINES IN THE MODOT 'TRAFFIC CONTROL FOR FIELD OPERATIONS MANUAL'.

2. NOTIFY MODOT RESIDENT ENGINEER 48-HOURS IN ADVANCE OF ANY LANE CLOSURE OR ROADWAY CLOSURE.

3. ALL EXISTING SIGNS SHALL BE USED IN PLACE, ADJUSTED, AND/OR COVERED AS CONDITIONS REQUIRE (NO DIRECT PAY).

4. ALL STATIONING, DISTANCES, AND SPACING OF WORK ZONES DEVICES ARE APPROXIMATE AND MAY BE REVISED AS APPROVED BY ENGINEER.

5. FIRST ORDER OF WORK ON ALL PHASES SHALL BE PLACEMENT OF ALL WORK ZONE WARNING DEVICES AND SIGNS AS NOTED.

6. SIGNS SHALL REMAIN IN PLACE UNTIL CONSTRUCTION IS COMPLETED OR AS APPROVED BY THE ENGINEER.

7. SIGNS LEFT IN PLACE OVERNIGHT MUST BE MOUNTED AT 5' MINIMUM HEIGHT.

8. ALTERNATE TRAFFIC CONTROL MAY BE USED AS NEEDED AT THE APPROVAL OF THE ENGINEER.

9. NO DIRECT PAYMENT WILL BE MADE FOR RELOCATION OF CHANNELIZERS, CONTRUCTION SIGNS, BARRICADES, AND OTHER TRAFFIC CONTROL DEVICES, UNLESS OTHERWISE SHOWN ON HTE PLANS.

10. ALWAYS USE ADVANCE WARNING SIGNS, FLASHING ARROW PANELS, AND CHANNELIZERS

11. USE EPG 616.8.M (TA-4M) MOBILE OPERATION ON A SHOULDER OR EPG 616.8.4SD SHORT DURATION WORK ON SHOULDER FOR SETTING ADVANCED WARNING SIGNS AND CHANNELIZERS.

12. PLACE A 'ROAD WORK AHEAD' SIGN ON THE APPROACH TO ALL INTERSECTIONS WHERE THE ADVANCE SIGNING FOR THE TEMPORARY TRAFFIC CONTROL EXTENDS PAST THAT INTERSECTION.

13. FOUR (4) PORTABLE CHANGEABLE MESSAGE SIGNS (CMS) SHALL BE SUPPLIED A MINIMUM OF FOURTEEN (14) DAYS IN ADVANCE OF ANY TURNING RESTRICTIONS, LANE CLOSURES, OR DETOURS REQUIRED BY THE TEMPORARY TRAFFIC CONTROL. CMS SIGNS SHALL BE PLACED AT THE INTERSECTION OF ROTUE CC AND MAIN STREET PRIOR TO CONSTRUCTION COMMENCEMENT TO NOTTIFY OF PLANNED CLOSURE. DURING CONSTRUCTION, CMS SHALL BE RELOCATED AS DIRECTED BY THE MODOT ENGINEER.

14. TYPE III MOVEABLE BARRICADES TO BE LOCATED AS APPROVED BY THE ENGINEER TO FIT FIELD CONDITIONS.

15. SPEED LIMIT SIGNS INDICATING THE NORMAL SPEED LIMIT SHALL BE INSTALLED AT THE END OF THE WORK ZONE, NO FURTHER WORK ZONES WILL BE ENCONTERED WITHIN THE NEXT ½ MILE.

16. TEMPORARY SPEED LIMIT SIGNS SHALL BE COVERED OR REMOVED WHEN THE CONDITIONS REQUIRING REDUCED SPEEDS DO NOT EXIST.

17. DISTANCE MAY BE ADJUSTED ACCORDING TO FIELD CONDITIONS.

SIGN SPACING FOR ADVANCE SIGN SERIES (1)		
PERMANENT POSTED SPEED MPH	UNDIVIDED HIGHWAYS	UNDIVIDED HIGHWAYS
0-35	200'	200'
40-45	350'	500'
50-55	500'	1000'
60-70	1000'	SA - 1000' SB - 1500' SC - 2640'

TAPER LENGTHS AND END TREATMENTS FOR CONCRETE BARRIER				
PERMANENT POSTED SPEED MPH	MINIMUM LANE TAPER LENGTH (2) T1			END TREATMENT (3)
	10'	11'	12'	
<40	160'	168'	176'	BARRIER HEIGHT TRANSITION
>40	160'	168'	176'	APPROVED CRASH CUSHION

TAPER LENGTHS AND SPACING FOR CHANNELIZERS							
PERMANENT POSTED SPEED MPH	MINIMUM LANE TAPER LENGTH (T1)			MINIMUM SHOULDER TAPER LENGTH BASED ON 10' SHOULDER	BUFFER LENGTH FT.	MAXIMUM CHANNELIZER SPACING	
	10'	11'	12'			THROUGH TAPER	THROUGH WORK AREA
0-35	205'	225'	245'	70'	280'	35'	40'
40-45	450'	495'	540'	150'	400'	40'	80'
50-55	550'	605'	660'	185'	560'	50'	80'
60-70	700'	770'	840'	235'	840'	60'	120'

NOTES:

(1) SPACING MAY BE ADJUSTED AS NECESSARY TO MEET FIELD CONDITIONS AND VIABILITY.

(2) TAPER LENGTHS SHOWN INCLUDE LENGTH REQUIRED FOR LANE AND 10' SHOULDER.

(3) CONCRETE BARRIER MAY BE INSTALLED AT AN 8:1 FLARE RATE FROM THE SHOULDER POINT TO THE LIMITS OF THE CLEAR ZONE WHERE THE SIDE SLOPE IS 6:1 OR FLATTER. CONTRACTOR MAY PROVIDE CONCRETE BARRIER, INCIDENTAL TO PROJECT.

TRAFFIC CONTROL
SHEET 1 OF 6

2025.07.22 09:17:08-05'00'
STATE OF MISSOURI
JADRIENNE S. RODELL-TIPTON
NUMBER PE-2021032725
PROFESSIONAL ENGINEER

THIS SHEET HAS BEEN SIGNED, SEALED AND DATED ELECTRONICALLY.

DATE PREPARED 7/22/2025

ROUTE	STATE
248	MO
DISTRICT	SHEET NO.
SW	10

COUNTY BARRY

JOB NO. JSR0119

CONTRACT ID.

PROJECT NO.

BRIDGE NO. A9432

DESCRIPTION

DATE

MISSOURI HIGHWAYS AND TRANSPORTATION COMMISSION
105 WEST CAPITOL
JEFFERSON CITY, MO 65102
1-888-ASK-MODOT (1-888-275-6636)

POWELL CWM
ARCHITECTURE/ENGINEERING/SURVEYING
3200 S. State Route 291, Bldg. 1, Independence, MO 64057
816.373.4800 | powellcwm.com

Certificates of Authority
Architecture: MO 310 / KS 73
Engineering: MO 4 / KS 241
Land Surveying: MO 123 / KS 36

REV.

TC_01-06_JSR0119_I1.dgn 8:37:49 AM 7/22/2025

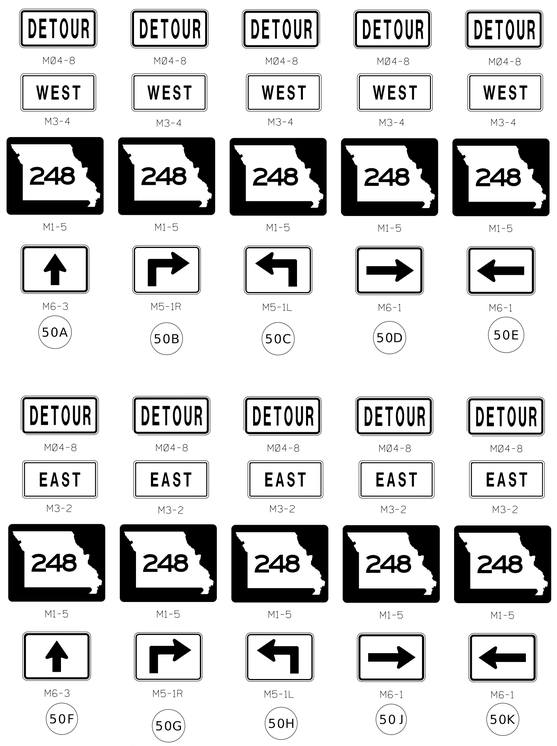

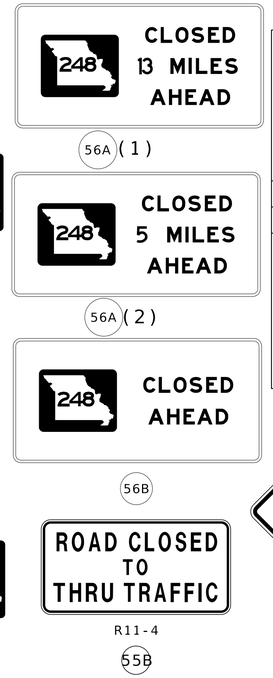

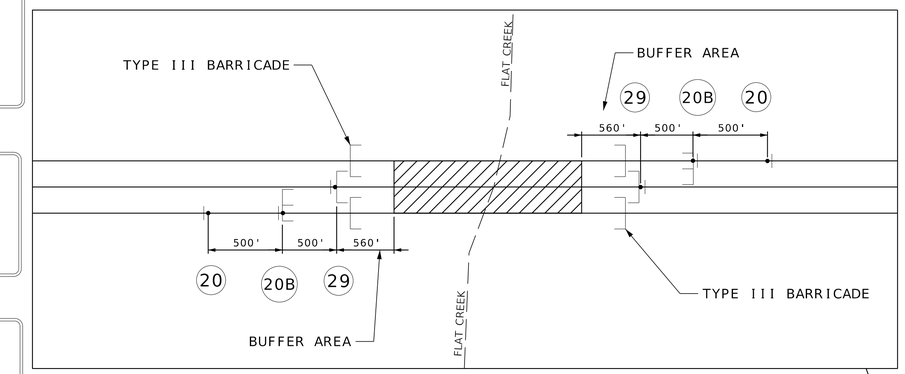

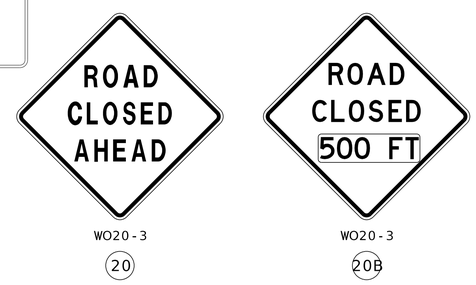

NOTE:
SPECIAL SIGN NO. 56,56A,56B, & 56C USE 6" "EM" SERIES LETTERS WITH 1.0" BLACK BORDER 3" RADIUS AND BLACK LETTERING ON ORANGE BACKGROUND SEE STANDARD PLAN 903.20 FOR CARDINAL DIRECTION AND ROUTE SHIELD DETAILS.

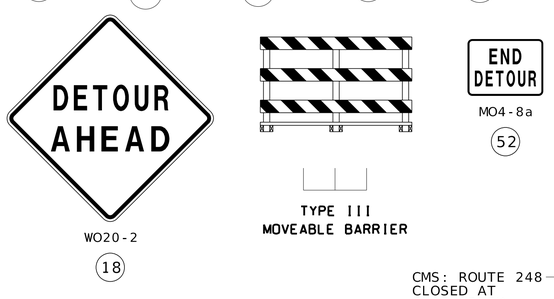

TRAFFIC CONTROL LEGEND

- SIGN (SINGLE SIDED)
- BARRICADE
- WORK AREA
- CHANGEABLE MESSAGE BOARD

CMS: ROUTE 248 CLOSED AT FLAT CREEK FOLLOW DETOUR

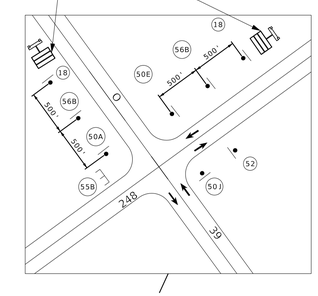

CMS: ROUTE 248 CLOSED AT FLAT CREEK FOLLOW DETOUR

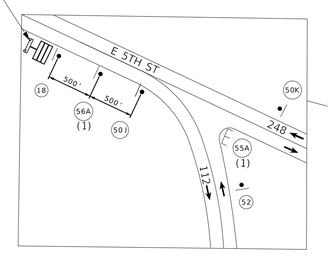

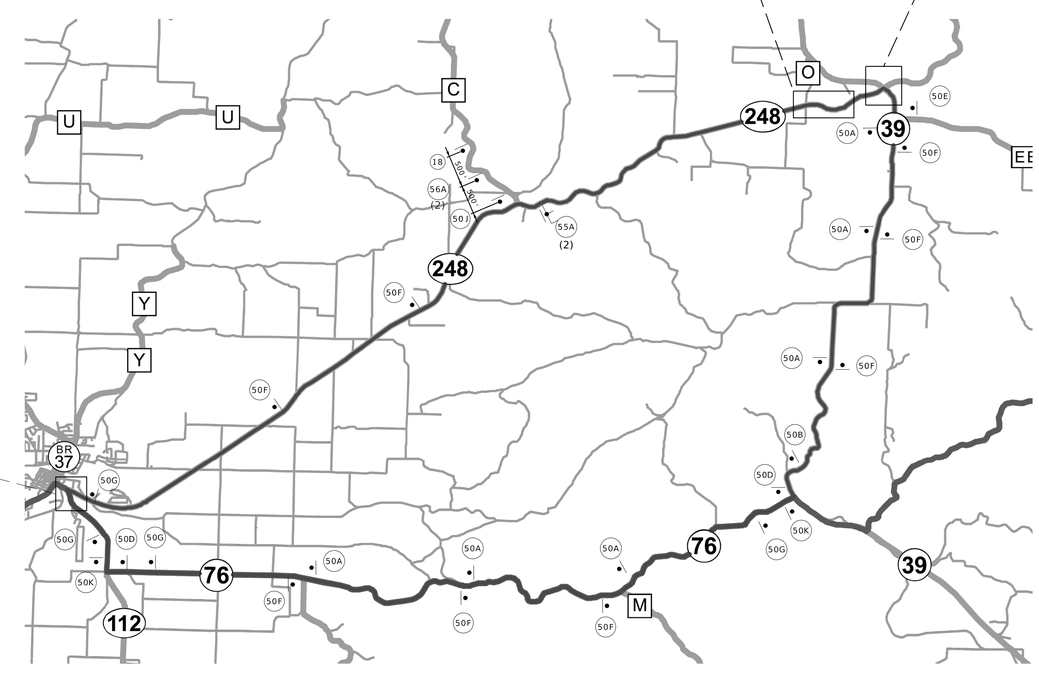

GENERAL NOTES:

1) SIGN LOCATIONS TO BE APPROVED BY ENGINEER.

2) DISTANCE MAY BE ADJUSTED ACCORDING TO FIELD CONDITIONS WITH PERMISSION OF THE ENGINEER.

3) NO DIRECT PAYMENT WILL BE MADE FOR RELOCATION OF TCC SIGNS AND DEVICES.

4) ANY EXISTING SIGNS THAT CONFLICT WITH TEMPORARY TRAFFIC CONTROL SHALL BE COVERED OR REMOVED

5) ALL TRAFFIC CONTROL ITEMS WHICH ARE NOT INCLUDED IN THE PAY ITEMS ARE TO BE CONSIDERED INCIDENTAL.

6) MAINTAIN ACCESS TO ALL ENTRANCES AT ALL TIMES.

TRAFFIC CONTROL
SHEET 2 OF 6

2025.07.22 09:18:18-05'00'
STATE OF MISSOURI
JADRIENNE S. RODELL-TIPTON
NUMBER
PE-2021032725
PROFESSIONAL ENGINEER

THIS SHEET HAS BEEN SIGNED, SEALED AND DATED ELECTRONICALLY.

DATE PREPARED	
7/22/2025	
ROUTE 248	STATE MO
DISTRICT SW	SHEET NO. 11
COUNTY BARRY	
JOB NO. JSR0119	
CONTRACT ID.	
PROJECT NO.	
BRIDGE NO. A9432	

DATE	DESCRIPTION

MISSOURI HIGHWAYS AND TRANSPORTATION COMMISSION
105 WEST CAPITOL
JEFFERSON CITY, MO 65102
1-888-ASK-MODOT (1-888-275-6636)

POWELL CWM
ARCHITECTURE/ENGINEERING/SURVEYING
3200 S. State Route 291, Bldg. 1, Independence, MO 64057
816.373.4800 | powellcwm.com

Certificates of Authority
Architecture: MO 310 / KS 73
Engineering: MO 4 / KS 241
Land Surveying: MO 123 / KS 36

REV.

TC_01-06_JSR0119_I1.dgn 8:37:50 AM 7/22/2025

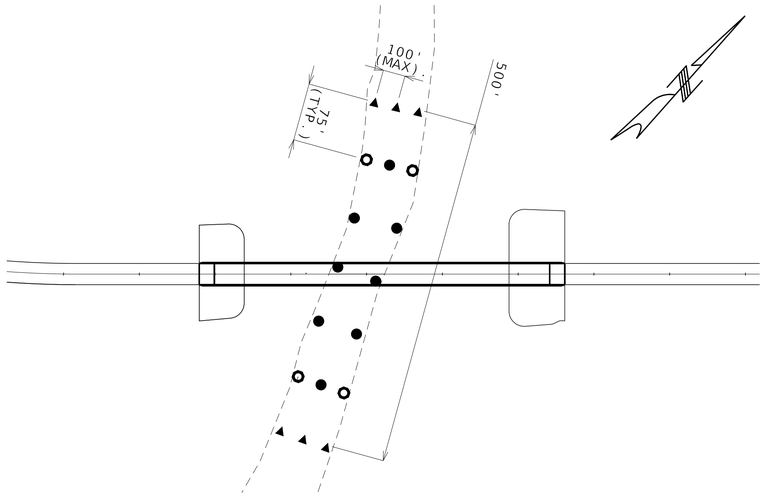

CMS: BRIDGE CONSTRUCTION AHEAD
PLEASE EXIT NOW

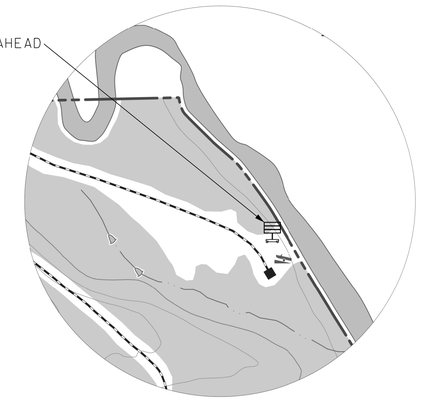

STUBBLEFIELD ACCESS

GENERAL NOTES:

INFORMATION SHOWN IS SCHEMATIC ONLY. FINAL LOCATION AND NUMBER OF SIGNS AND BUOYS IS SUBJECT TO APPROVAL OF MISSOURI STATE WATER PATROL

THE DETAILS SHOWN ARE FOR BIDDING PURPOSES ONLY. ALL MATERIALS AND LABOR NECESSARY TO INSTALL AND REMOVE

SIGNS SHALL BE INCIDENTAL TO OTHER ITEMS

THE CONTRACTOR IS RESPONSIBLE FOR BUOY MAINTENANCE THROUGHOUT CONSTRUCTION AND FOR DETERMINING ANTICIPATED WATER LEVELS DURING CONSTRUCTION. EACH SIGN AND BUOY SHALL BE ANCHORED TO BOTTOM OF STREAM.

SIGNS SHALL BE DOUBLE FACED

EACH SIGN SHALL BE EQUIPPED WITH TWO (2) FLASHING LIGHT UNITS WITH AMBER LENS. FLASHING LIGHT UNITS SHALL BE FURNISHED AND MAINTAINED BY THE CONTRACTOR

ALL LETTERING TO BE BLACK IN COLOR IN BLOCK FORM.

FOR OTHER INFORMATION AND LOCATION OF SIGNS AND BUOYS SEE SPECIAL PROVISIONS.

SCHEMATIC SHOWN IS FOR ONE NAVIGATIONAL SPAN. FOR WORK ON OTHER SPANS MOVE APPROPRIATE SIGNS WITH NO DIRECT PAY

COLOR:
- BACKGROUND - WHITE
- LEGEND - BLACK
- 2" REFLECTIVE BAND AND SYMBOL - INTERNATIONAL ORANGE

LEGEND

- ○ - BOATS KEEP OUT (SIGN)
- ● - BOATS KEEP OUT (BUOY)
- ▲ - NO WAKE (BUOY)
- ▭ - CHANGEABLE MESSAGE BOARD

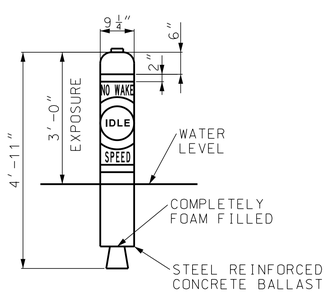

51 POUND ANCHOR TACKLE PERMITTED

RESTRICTED AREA BUOY

("NO WAKE")
(6 REQUIRED)

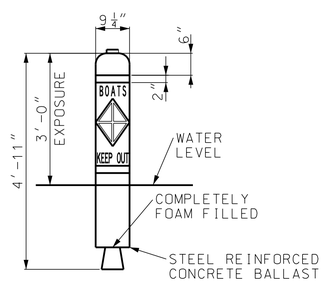

51 POUND ANCHOR TACKLE PERMITTED

CONTROLLED AREA BUOY

("BOATS KEEP OUT")
(8 REQUIRED)

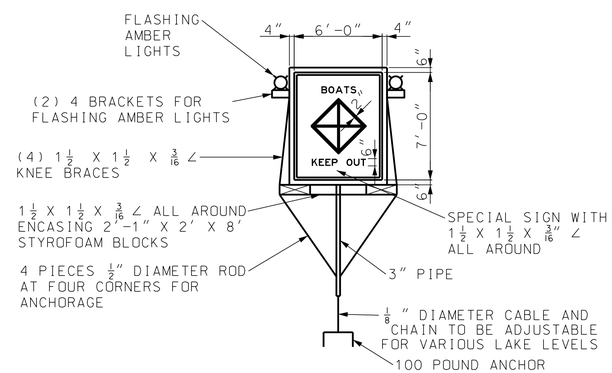

SPECIAL SIGN ASSEMBLY

("BOATS KEEP OUT")
(4 REQUIRED)

TRAFFIC CONTROL
SHEET 3 OF 6

2025.07.22 09:17:25-05'00'

STATE OF MISSOURI
JADRIENNE S. RODELL-TIPTON
NUMBER
PE-2021032725
PROFESSIONAL ENGINEER

THIS SHEET HAS BEEN SIGNED, SEALED AND DATED ELECTRONICALLY.

DATE PREPARED	
7/22/2025	
ROUTE	STATE
248	MO
DISTRICT	SHEET NO.
SW	12
COUNTY	
BARRY	
JOB NO.	
JSR0119	
CONTRACT ID.	
PROJECT NO.	
BRIDGE NO.	
A9432	

DESCRIPTION	DATE

MISSOURI HIGHWAYS AND TRANSPORTATION COMMISSION
105 WEST CAPITOL
JEFFERSON CITY, MO 65102
1-888-ASK-MODOT (1-888-275-6636)

POWELL CWM
ARCHITECTURE/ENGINEERING/SURVEYING
3200 S. State Route 291, Bldg. 1, Independence, MO 64057
816.373.4800 | powellcwm.com

Certificates of Authority
Architecture: MO 310 / KS 73
Engineering: MO 4 / KS 241
Land Surveying: MO 123 / KS 36

REV.

TC_01-06_JSR0119_I1.dgn 8:38:00 AM 7/22/2025

NOT TO SCALE

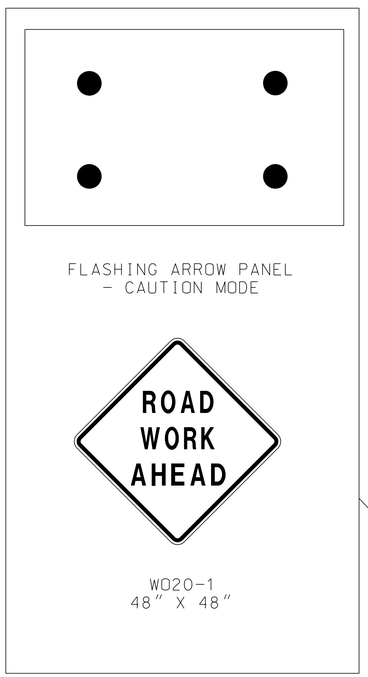

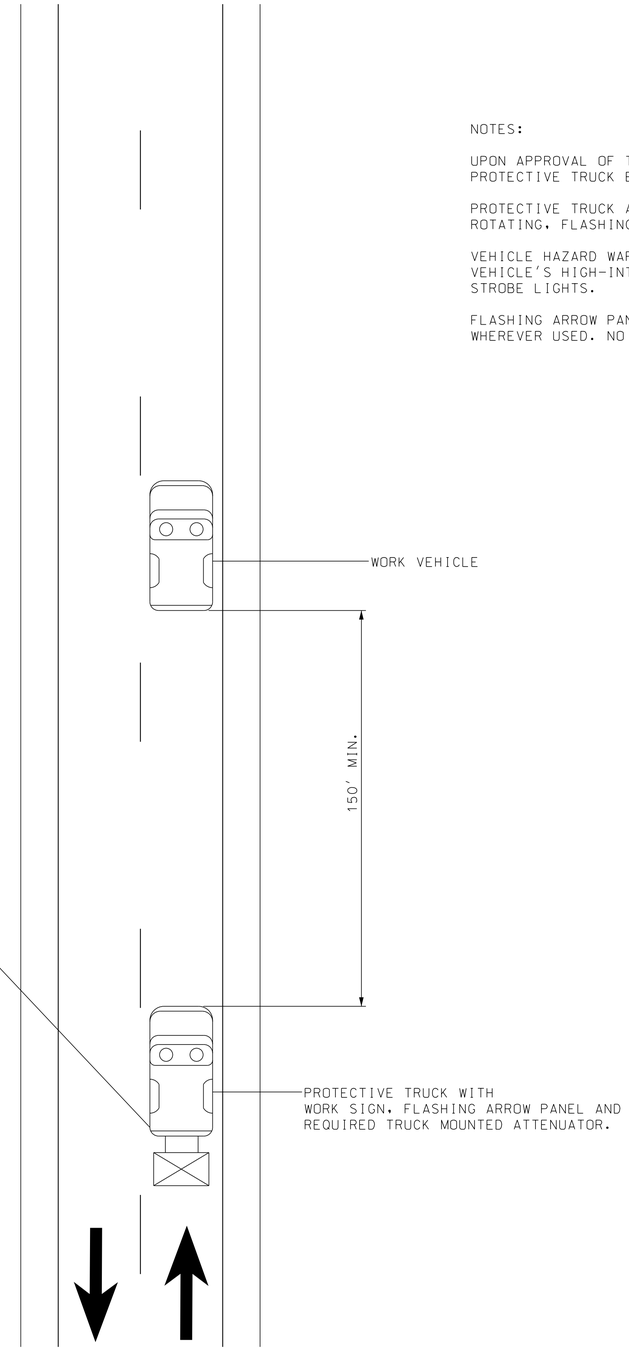

NOTES:

UPON APPROVAL OF THE ENGINEER, THE CONTRACTOR MAY PROVIDE ADDITIONAL PROTECTIVE TRUCK EQUIPPED WITH PROPER WARNING DEVICES.

PROTECTIVE TRUCK AND WORK VEHICLES SHALL DISPLAY HIGH-INTENSITY ROTATING, FLASHING, OSCILLATING, OR STROBE LIGHTS.

VEHICLE HAZARD WARNING SIGNALS SHALL NOT BE USED INSTEAD OF THE VEHICLE'S HIGH-INTENSITY ROTATING, FLASHING, OSCILLATING, OR STROBE LIGHTS.

FLASHING ARROW PANELS SHALL BE INCIDENTAL TO TRUCK MOUNTED ATTENUATORS, WHEREVER USED. NO ADDITIONAL PAYMENT WILL BE MADE.

TRAFFIC CONTROL
SHEET 4 OF 6

2025.07.22 09:16:54-05'00'
STATE OF MISSOURI
JADRIENNE S. RODELL-TIPTON
NUMBER
PE-2021032725
PROFESSIONAL ENGINEER

THIS SHEET HAS BEEN SIGNED, SEALED AND DATED ELECTRONICALLY.

DATE PREPARED	
7/22/2025	
ROUTE	STATE
248	MO
DISTRICT	SHEET NO.
SW	13
COUNTY	
BARRY	
JOB NO.	
JSR0119	
CONTRACT ID.	
PROJECT NO.	
BRIDGE NO.	
A9432	

DATE	DESCRIPTION

MISSOURI HIGHWAYS AND TRANSPORTATION COMMISSION
105 WEST CAPITOL
JEFFERSON CITY, MO 65102
1-888-ASK-MODOT (1-888-275-6636)

POWELL CWM
ARCHITECTURE/ENGINEERING/SURVEYING
3200 S. State Route 291, Bldg. 1, Independence, MO 64057
816.373.4800 | powellcwm.com

Certificates of Authority
Architecture: MO 310 / KS 73
Engineering: MO 4 / KS 241
Land Surveying: MO 123 / KS 36

REV.

TC_01-06_JSR0119_I1.dgn 8:38:05 AM 7/22/2025

MO4-11-36 SHF-FLAT SHEET FLUORESCENT;
2.250" Radius, 0.875" Border, 0.625" Indent, Black on Orange;
Table of letter and object lefts.

6.000
6.000
3.000
7.500

MO4-11-36 SHF-FLAT SHEET FLUORESCENT;
2.250" Radius, 0.875" Border, 0.625" Indent, Black on Orange;
Table of letter and object lefts.

6.000
6.000
3.000
7.500

MO4-11-36 SHF-FLAT SHEET FLUORESCENT;
2.250" Radius, 0.875" Border, 0.625" Indent, Black on Orange;
Table of letter and object lefts.

6.000
6.000
3.000
7.500

MO4-11-36 SHF-FLAT SHEET FLUORESCENT;
2.250" Radius, 0.875" Border, 0.625" Indent, Black on Orange;
Table of letter and object lefts.

6.000
6.000
3.000
7.500

MO4-11-36 SHF-FLAT SHEET FLUORESCENT;
2.250" Radius, 0.875" Border, 0.625" Indent, Black on Orange;
Table of letter and object lefts.

6.000
6.000
3.000
7.500

MO4-11-36 SHF-FLAT SHEET FLUORESCENT;
2.250" Radius, 0.875" Border, 0.625" Indent, Black on Orange;
Table of letter and object lefts.

6.000
6.000
3.000
7.500

MO4-11-36 SHF-FLAT SHEET FLUORESCENT;
2.250" Radius, 0.875" Border, 0.625" Indent, Black on Orange;
Table of letter and object lefts.

6.000
6.000
3.000
7.500

MO4-11-36 SHF-FLAT SHEET FLUORESCENT;
2.250" Radius, 0.875" Border, 0.625" Indent, Black on Orange;
Table of letter and object lefts.

6.000
6.000
3.000
7.500

MO4-11-36 SHF-FLAT SHEET FLUORESCENT;
2.250" Radius, 0.875" Border, 0.625" Indent, Black on Orange;
Table of letter and object lefts.

6.000
6.000
3.000
7.500

MO4-11-36 SHF-FLAT SHEET FLUORESCENT;
2.250" Radius, 0.875" Border, 0.625" Indent, Black on Orange;
Table of letter and object lefts.

6.000
6.000
3.000
7.500

TRAFFIC CONTROL
SHEET 5 OF 6

2025.07.22 09:18:09-05'00'

STATE OF MISSOURI
JADRIENNE S. RODELL-TIPTON
NUMBER
PE-2021032725
PROFESSIONAL ENGINEER

THIS SHEET HAS BEEN SIGNED, SEALED AND DATED ELECTRONICALLY.

DATE PREPARED
7/22/2025

ROUTE	STATE
248	MO
DISTRICT	SHEET NO.
SW	14

COUNTY
BARRY

JOB NO.
JSR0119

CONTRACT ID.

PROJECT NO.

BRIDGE NO.
A9432

DATE	DESCRIPTION

MISSOURI HIGHWAYS AND TRANSPORTATION COMMISSION
105 WEST CAPITOL
JEFFERSON CITY, MO 65102
1-888-ASK-MODOT (1-888-275-6636)

POWELL
CWM
ARCHITECTURE/ENGINEERING/SURVEYING
3200 S. State Route 291, Bldg. 1, Independence, MO 64057
816.373.4800 | powellcwm.com

Certificates of Authority
Architecture: MO 310 / KS 73
Engineering: MO 4 / KS 241
Land Surveying: MO 123 / KS 36

REV.

TC_01-06_JSR0119_I1.dgn 8:38:05 AM 7/22/2025

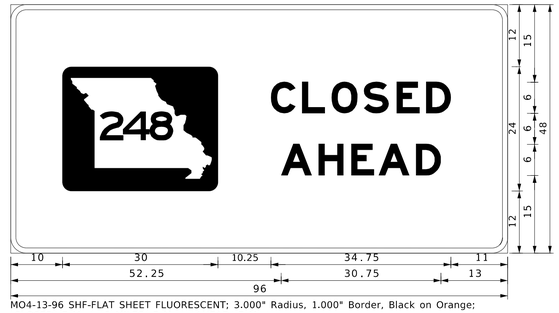

MO4-13-96 SHF-FLAT SHEET FLUORESCENT; 3.000" Radius, 1.000" Border, Black on Orange;
[CLOSED] E Mod; [2 MILES] E Mod; [AHEAD] E Mod;
Table of letter and object lefts.

10.000	C 50.250	L 56.250	O 62.000	S 68.250	E 74.500	D 80.250
X 49.250	M 60.000	I 67.125	L 69.875	E 75.500	S 81.250	
A 52.250	H 59.375	E 65.750	A 71.000	D 78.250		

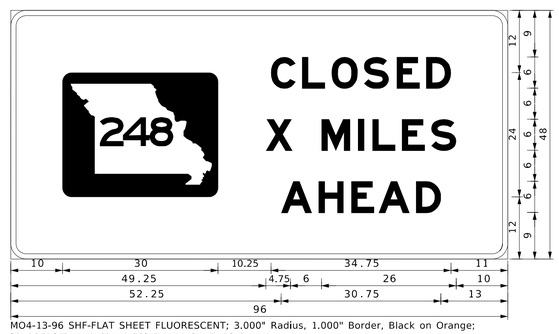

MO4-13-96 SHF-FLAT SHEET FLUORESCENT; 3.000" Radius, 1.000" Border, Black on Orange;
[CLOSED] E Mod; [2 MILES] E Mod; [AHEAD] E Mod;
Table of letter and object lefts.

10.000	C 50.250	L 56.250	O 62.000	S 68.250	E 74.500	D 80.250
X 49.250	M 60.000	I 67.125	L 69.875	E 75.500	S 81.250	
A 52.250	H 59.375	E 65.750	A 71.000	D 78.250		

NOTE: X SHALL BE REPLACED WITH MILES PER PLAN, AS INDICATED BELOW.

(1) X = 13
(2) X = 5

TRAFFIC CONTROL
SHEET 6 OF 6

2025.07.22 09:17:36-05'00'

STATE OF MISSOURI
JADRIENNE S. RODELL-TIPTON
NUMBER
PE-2021032725
PROFESSIONAL ENGINEER

THIS SHEET HAS BEEN SIGNED, SEALED AND DATED ELECTRONICALLY.

DATE PREPARED
7/22/2025

ROUTE	STATE
248	MO
DISTRICT	SHEET NO.
SW	15

COUNTY
BARRY

JOB NO.
JSR0119

CONTRACT ID.

PROJECT NO.

BRIDGE NO.
A9432

DATE	DESCRIPTION

MISSOURI HIGHWAYS AND TRANSPORTATION COMMISSION
105 WEST CAPITOL
JEFFERSON CITY, MO 65102
1-888-ASK-MODOT (1-888-275-6636)

POWELL CWM
ARCHITECTURE/ENGINEERING/SURVEYING
3200 S. State Route 291, Bldg. 1, Independence, MO 64057
816.373.4800 | powellcwm.com

Certificates of Authority
Architecture: MO 310 / KS 73
Engineering: MO 4 / KS 241
Land Surveying: MO 123 / KS 36

REV.

TC_01-06_JSR0119_I1.dgn 8:38:06 AM 7/22/2025

TEMPORARY EROSION CONTROL LEGEND

SCALE
0 20 40 60

(S) SEDIMENT TRAP

PI	763+44.91
PC	754+28.30
PT	770+17.20
Δ	71°30'0.2" (LT)
D	4°29'59.9"
L	1,588.90' (ARC)
T	916.61'
R	1,273.25'

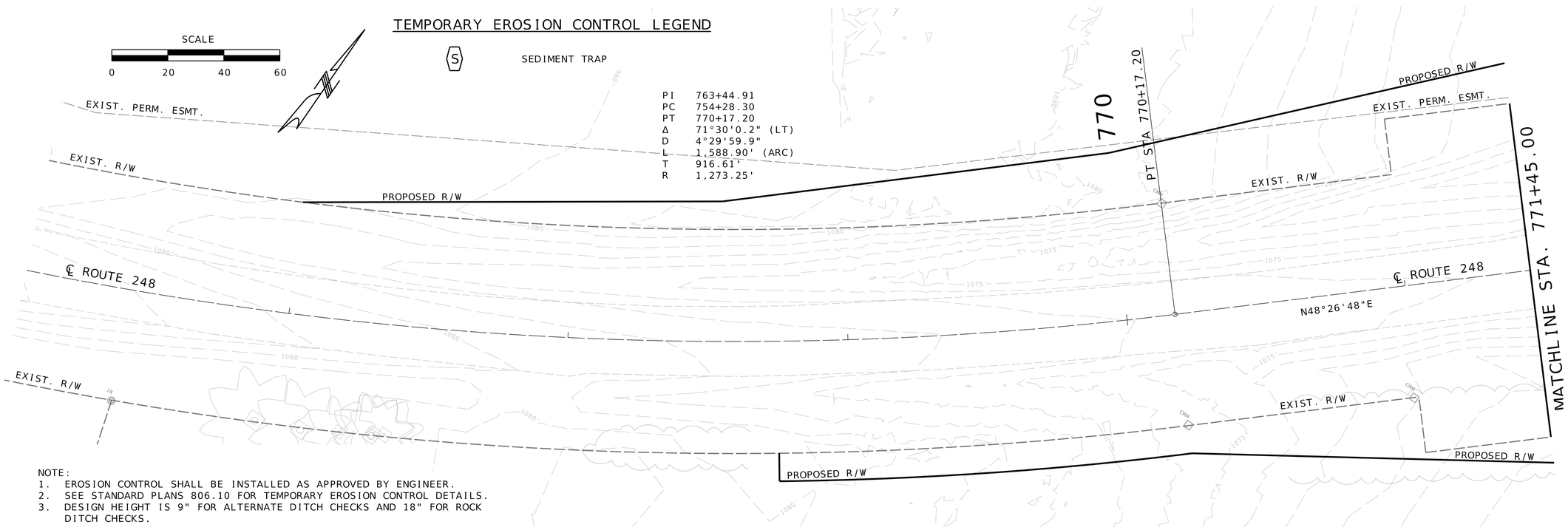

NOTE:
1. EROSION CONTROL SHALL BE INSTALLED AS APPROVED BY ENGINEER.
2. SEE STANDARD PLANS 806.10 FOR TEMPORARY EROSION CONTROL DETAILS.
3. DESIGN HEIGHT IS 9" FOR ALTERNATE DITCH CHECKS AND 18" FOR ROCK DITCH CHECKS.

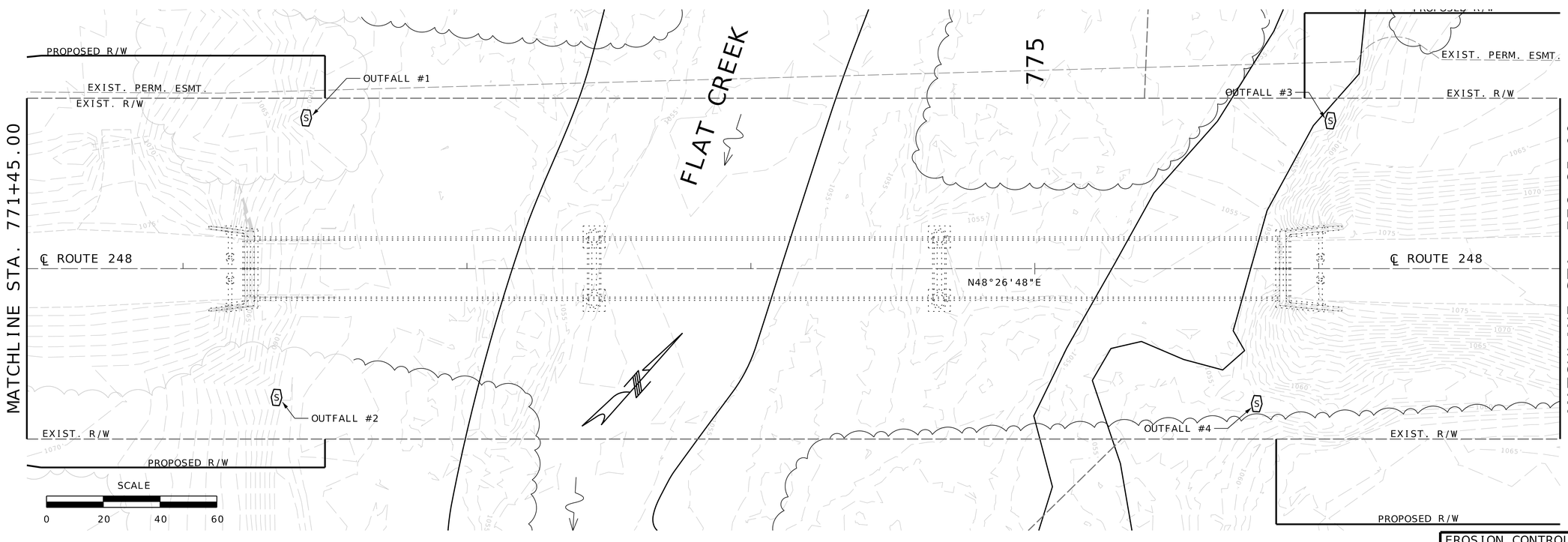

EROSION CONTROL SHEET
INITIAL PHASE
SHEET 1 OF 6

Digitally signed by Grant Luckenbill
Date: 2025.08.06 09:51:22-05'00'

GRANT C. LUCKENBILL
NUMBER
PE-2012018100
8-6-25
GRANT C. LUCKENBILL—ENGINEER
MO# PE-2012018100

DATE PREPARED	8/5/2025
ROUTE	248
STATE	MO
DISTRICT	SW
SHEET NO.	16
COUNTY	BARRY
JOB NO.	JSR0119
CONTRACT ID.	
PROJECT NO.	
BRIDGE NO.	A9432

DATE	DESCRIPTION

IF A SEAL IS PRESENT ON THIS SHEET IT HAS BEEN ELECTRONICALLY SEALED AND DATED.

MISSOURI HIGHWAYS AND TRANSPORTATION COMMISSION
105 WEST CAPITOL
JEFFERSON CITY, MO 65102
1-888-ASK-MODOT (1-888-275-6636)

olsson
550 ST. LOUIS STREET
SPRINGFIELD, MO 65806
PHONE: 417.890.8802
CERTIFICATE OF AUTHORITY NO. 001592

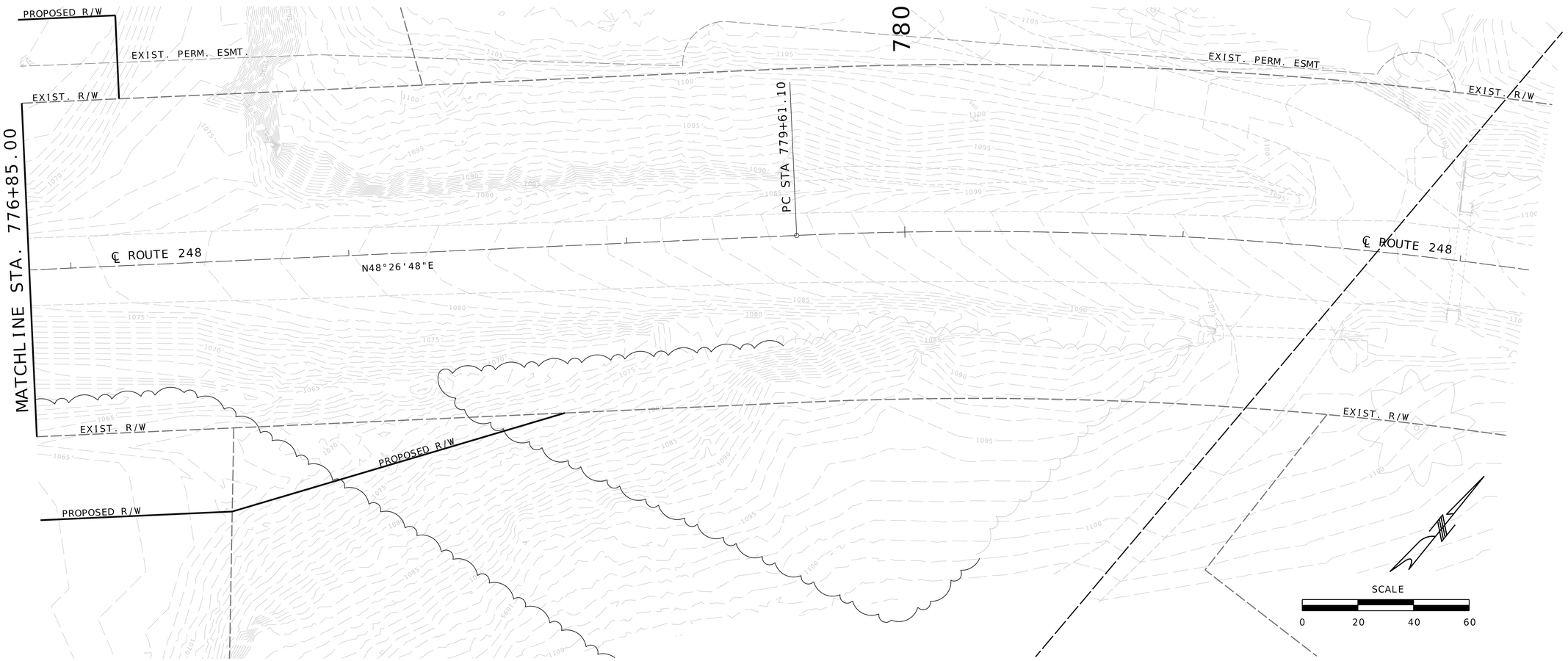

TEMPORARY EROSION CONTROL LEGEND

(S) SEDIMENT TRAP

PI	783+40.46
PC	779+61.10
PT	787+02.80
Δ	29°39'59.4" (RT)
D	3°59'59.3"
L	741.70' (ARC)
T	379.36'
R	1,432.46'

EROSION CONTROL SHEET
INITIAL PHASE
SHEET 2 OF 6

Digitally signed by Grant Luckenbill
Date: 2025.08.06 09:51:04-05'00'

GRANT C. LUCKENBILL
NUMBER
PE-2012018100
8-6-25

GRANT C. LUCKENBILL—ENGINEER
MO# PE-2012018100

DATE PREPARED	
8/5/2025	
ROUTE	STATE
248	MO
DISTRICT	SHEET NO.
SW	17
COUNTY	
BARRY	
JOB NO.	
JSR0119	
CONTRACT ID.	
PROJECT NO.	
BRIDGE NO.	
A9432	

DATE	DESCRIPTION

MISSOURI HIGHWAYS AND TRANSPORTATION COMMISSION
105 WEST CAPITOL
JEFFERSON CITY, MO 65102
1-888-ASK-MODOT (1-888-275-6636)

IF A SEAL IS PRESENT ON THIS SHEET IT HAS BEEN ELECTRONICALLY SEALED AND DATED.

olsson
550 ST. LOUIS STREET
SPRINGFIELD, MO 65806
PHONE: 417.890.8802
CERTIFICATE OF AUTHORITY NO. 001592

F:\2023\04001-04500\023-04082\40-Design\Microstation\JSR0119\023-04082_JSR0119\plan_sheets\09 Erosion Control\016_EC_01-02_JSR0119_I20.dgn 6:01:11 AM 8/5/2025

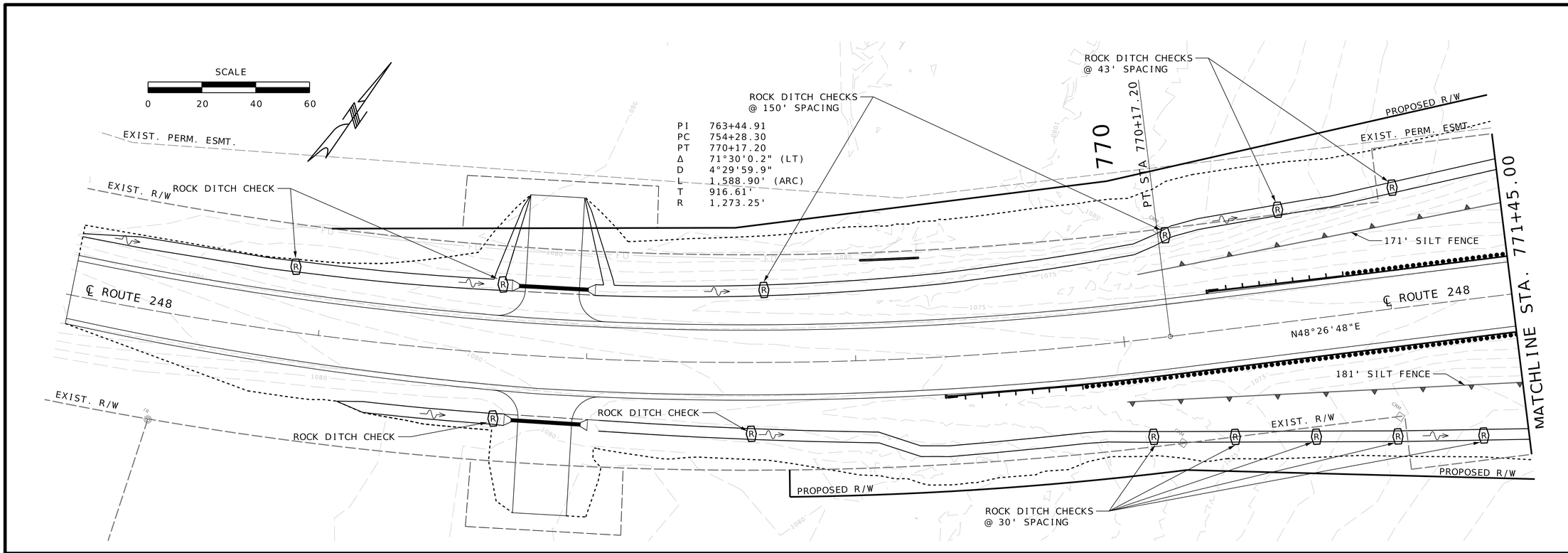

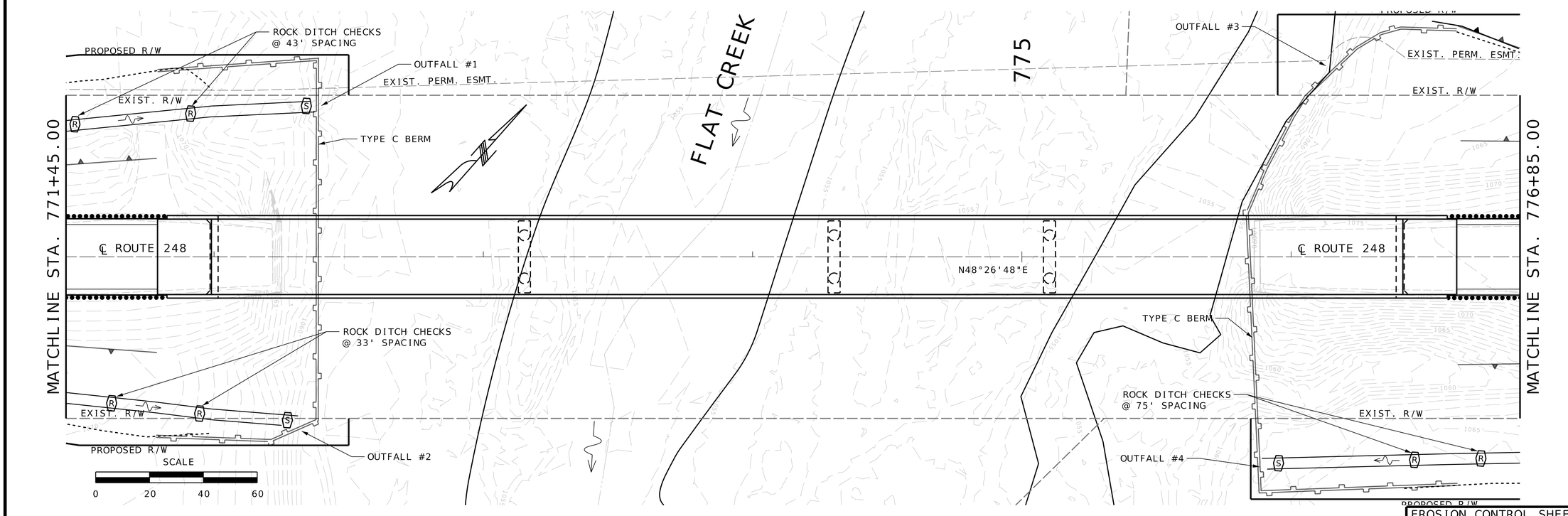

EROSION CONTROL SHEET
CONSTRUCTION PHASE
SHEET 3 OF 6

Digitally signed by Grant Luckenbill
Date: 2025.08.06 10:39:28-05'00'

GRANT C. LUCKENBILL
NUMBER
PE-2012018100

6-25

GRANT C. LUCKENBILL—ENGINEER
MO# PE-2012018100

DATE PREPARED	
8/5/2025	
ROUTE 248	STATE MO
DISTRICT SW	SHEET NO. 18
COUNTY BARRY	
JOB NO. JSR0119	
CONTRACT ID.	
PROJECT NO.	
BRIDGE NO. A9432	

DATE	DESCRIPTION

MISSOURI HIGHWAYS AND TRANSPORTATION COMMISSION

105 WEST CAPITOL
JEFFERSON CITY, MO 65102
1-888-ASK-MODOT (1-888-275-6636)

MoDOT

olsson
550 ST. LOUIS STREET
SPRINGFIELD, MO 65806
PHONE: 417.890.8802
CERTIFICATE OF AUTHORITY NO. 001592

IF A SEAL IS PRESENT ON THIS SHEET IT HAS BEEN ELECTRONICALLY SEALED AND DATED.

F:\2023\04001-04500\023-04082\40-Design\Microstation\JSR0119\023-04082_JSR0119\plan_sheets\09 Erosion Control\017_EC_03-04_JSR0119_120.dgn 6:01:13 AM 8/5/2025

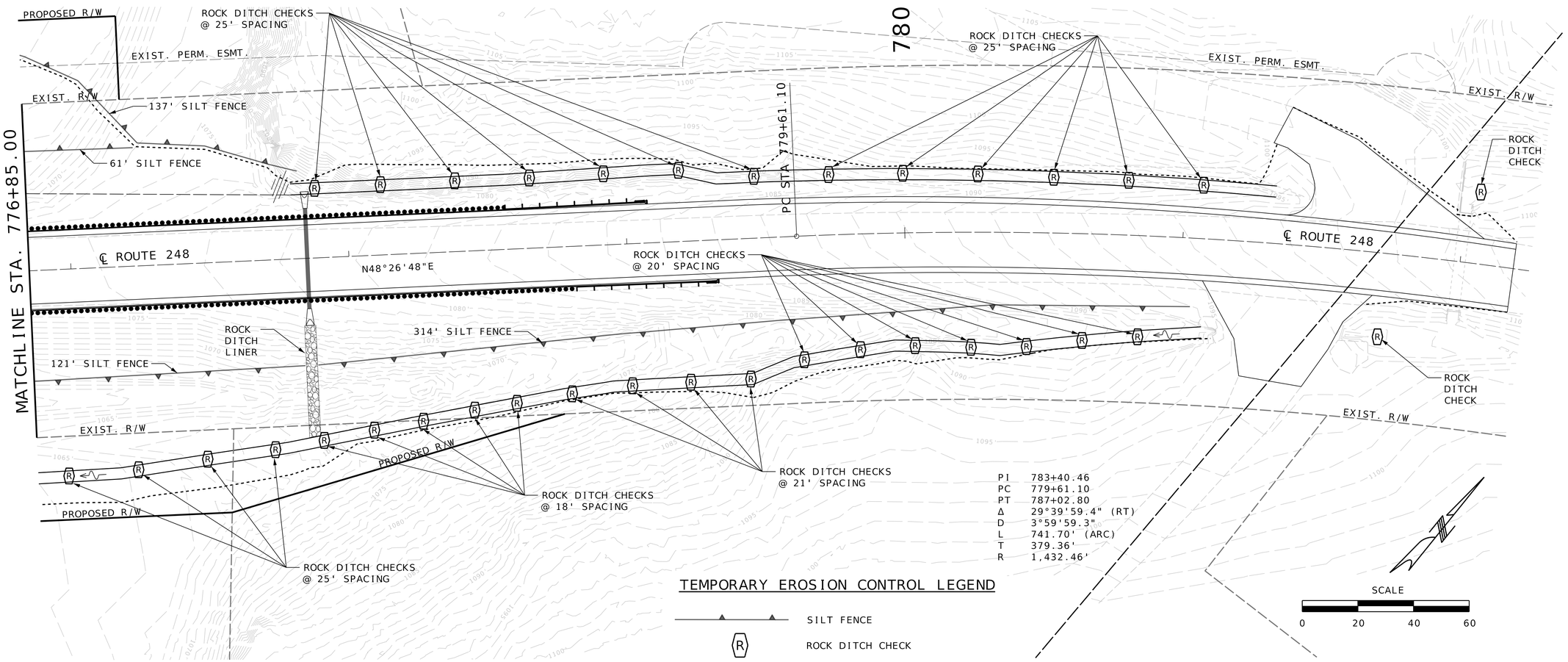

TEMPORARY EROSION CONTROL LEGEND

SILT FENCE

(R) ROCK DITCH CHECK

EROSION CONTROL SHEET
CONSTRUCTION PHASE
SHEET 4 OF 6

Digitally signed by Grant Luckenbill
Date: 2025.08.06 09:52:02-05'00'

GRANT C. LUCKENBILL
NUMBER PE-2012018100
8-6-25
GRANT C. LUCKENBILL—ENGINEER
MO# PE-2012018100

DATE PREPARED	
8/5/2025	
ROUTE 248	STATE MO
DISTRICT SW	SHEET NO. 19
COUNTY BARRY	
JOB NO. JSR0119	
CONTRACT ID.	
PROJECT NO.	
BRIDGE NO. A9432	

DATE	DESCRIPTION

MISSOURI HIGHWAYS AND TRANSPORTATION COMMISSION
105 WEST CAPITOL
JEFFERSON CITY, MO 65102
1-888-ASK-MODOT (1-888-275-6636)

IF A SEAL IS PRESENT ON THIS SHEET IT HAS BEEN ELECTRONICALLY SEALED AND DATED.

olsson
550 ST. LOUIS STREET
SPRINGFIELD, MO 65806
PHONE: 417.890.8802
CERTIFICATE OF AUTHORITY NO. 001592

TEMPORARY EROSION CONTROL LEGEND

TYPE 3B EROSION CONTROL BLANKET

TYPE 3 TURF REINFORCEMENT MAT

PI	763+44.91
PC	754+28.30
PT	770+17.20
Δ	71°30'0.2" (LT)
D	4°29'59.9"
L	1,588.90' (ARC)
T	916.61'
R	1,273.25'

SCALE 0 20 40 60

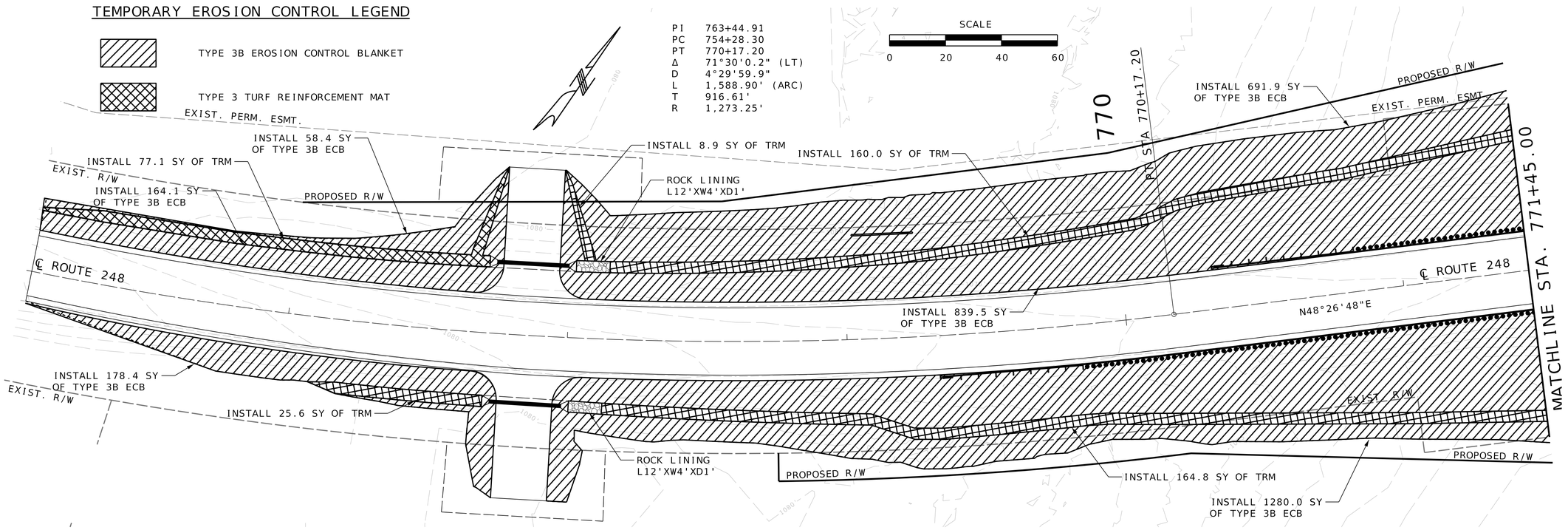

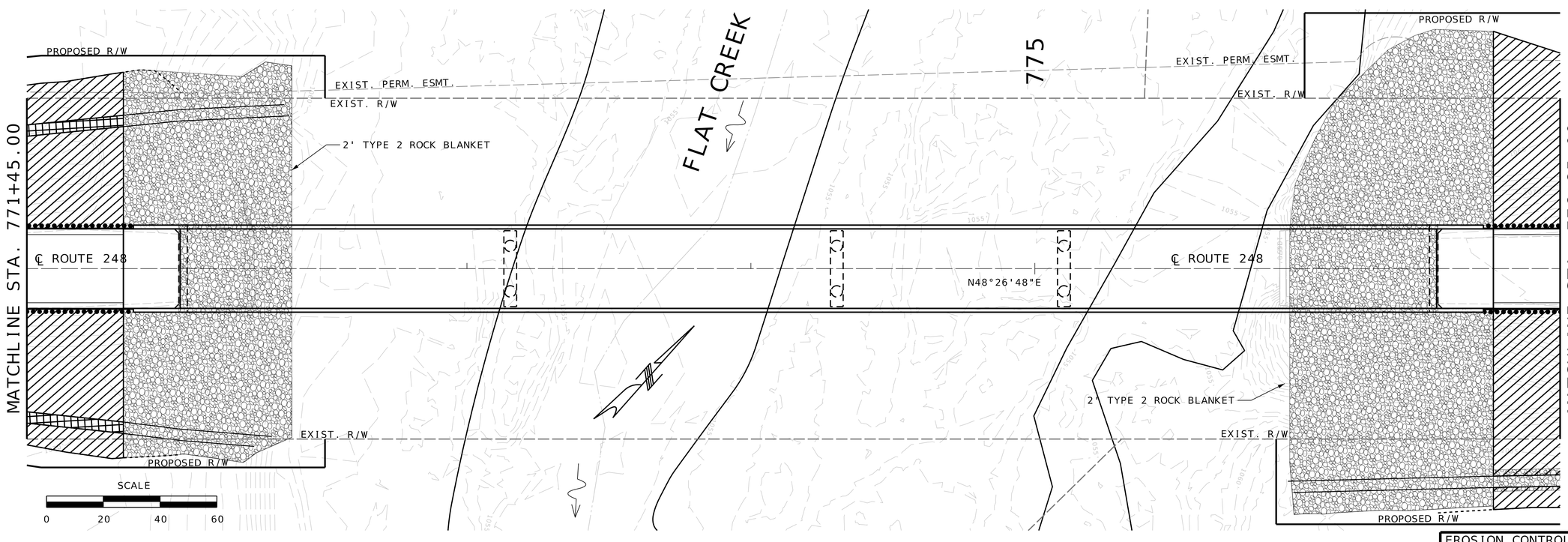

EROSION CONTROL SHEET
FINAL PHASE
SHEET 5 OF 6

Digitally signed by Grant Luckenbill
Date: 2025.08.06 09:54:01-05'00'

GRANT C. LUCKENBILL NUMBER PE-2012018100 8-6-25

GRANT C. LUCKENBILL—ENGINEER
MO# PE-2012018100

DATE PREPARED	
8/5/2025	
ROUTE 248	STATE MO
DISTRICT SW	SHEET NO. 20
COUNTY BARRY	
JOB NO. JSR0119	
CONTRACT ID.	
PROJECT NO.	
BRIDGE NO. A9432	

DESCRIPTION

DATE

IF A SEAL IS PRESENT ON THIS SHEET IT HAS BEEN ELECTRONICALLY SEALED AND DATED.

MISSOURI HIGHWAYS AND TRANSPORTATION COMMISSION

105 WEST CAPITOL
JEFFERSON CITY, MO 65102
1-888-ASK-MODOT (1-888-275-6636)

olsson
550 ST. LOUIS STREET
SPRINGFIELD, MO 65806
PHONE: 417.890.8802
CERTIFICATE OF AUTHORITY NO. 001592

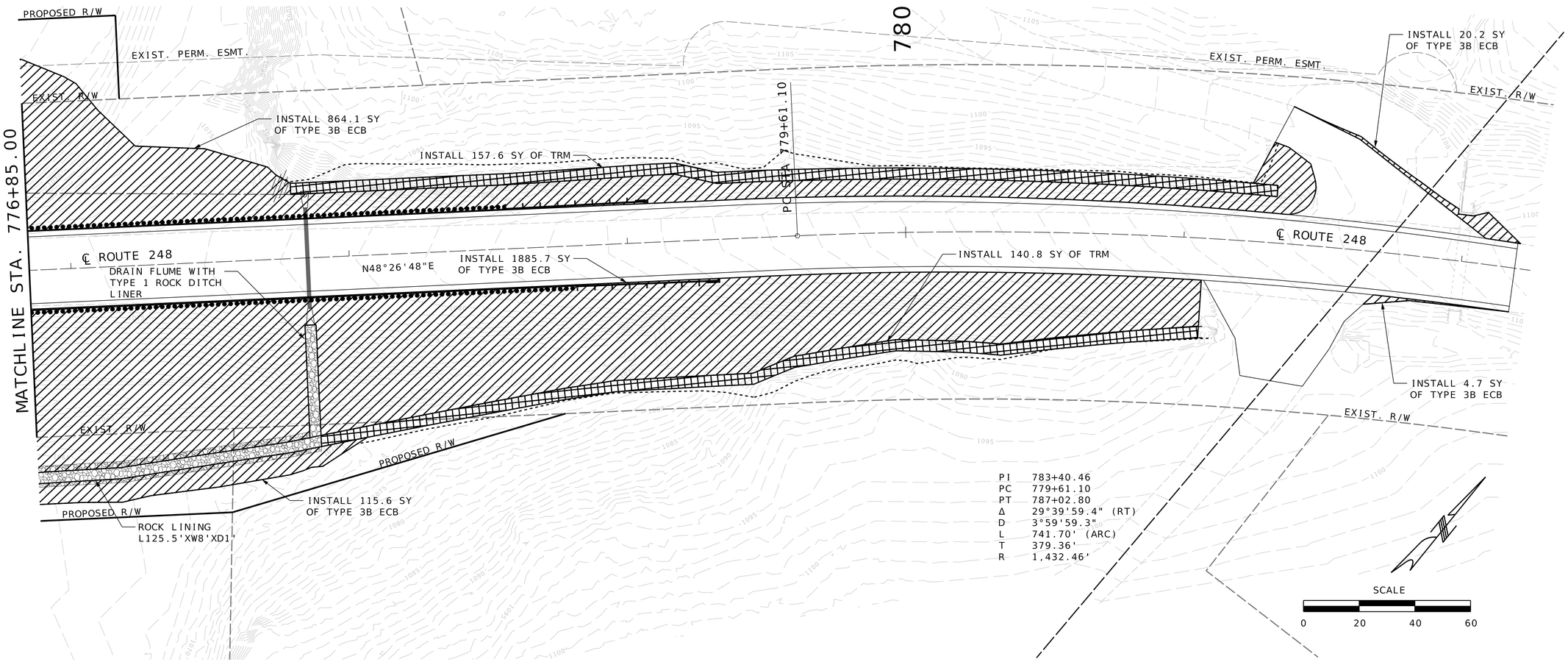

TEMPORARY EROSION CONTROL LEGEND

TYPE 3B EROSION CONTROL BLANKET

TYPE 3 TURF REINFORCEMENT MAT

EROSION CONTROL SHEET
FINAL PHASE
SHEET 6 OF 6

Digitally signed by Grant Luckenbill
Date: 2025.08.06 09:54:25-05'00'

GRANT C. LUCKENBILL
NUMBER PE-2012018100
8-6-25

GRANT C. LUCKENBILL—ENGINEER
MO# PE-2012018100

DATE PREPARED	
8/5/2025	
ROUTE 248	STATE MO
DISTRICT SW	SHEET NO. 21
COUNTY BARRY	
JOB NO. JSR0119	
CONTRACT ID.	
PROJECT NO.	
BRIDGE NO. A9432	

DATE	DESCRIPTION

IF A SEAL IS PRESENT ON THIS SHEET IT HAS BEEN ELECTRONICALLY SEALED AND DATED.

MISSOURI HIGHWAYS AND TRANSPORTATION COMMISSION
105 WEST CAPITOL
JEFFERSON CITY, MO 65102
1-888-ASK-MODOT (1-888-275-6636)

olsson
550 ST. LOUIS STREET
SPRINGFIELD, MO 65806
PHONE: 417.890.8802
CERTIFICATE OF AUTHORITY NO. 001592

F:\2023\04001-04500\023-04082\40-Design\Microstation\JSR0119\023-04082_JSR0119\plan_sheets\09 Erosion Control\018_EC_05-06_JSR0119_I20.dgn 6:01:17 AM 8/5/2025

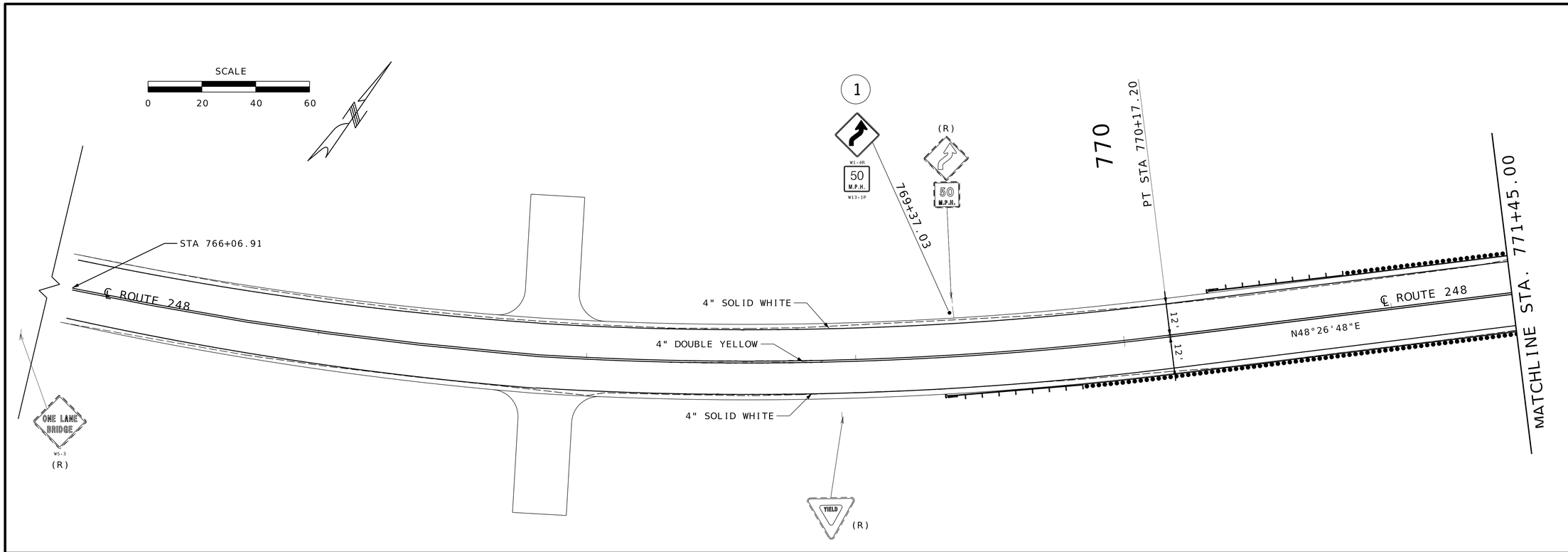

NOTES:

1) SEE STANDARD PLAN 620.00 FOR PAVEMENT MARKING DETAILS.

1) THE CONTRACTOR SHALL REPLACE ALL DISTURBED PAVEMENT MARKINGS AS DIRECTED BY ENGINEER.

3) CONTRAST PAVEMENT MARKINGS WILL BE REQUIRED FOR THE CONCRETE OPTION AND COMPLY WITH SECTION 620 OF THE MISSOURI STANDARD SPECIFICATIONS AT NO DIRECT PAY.

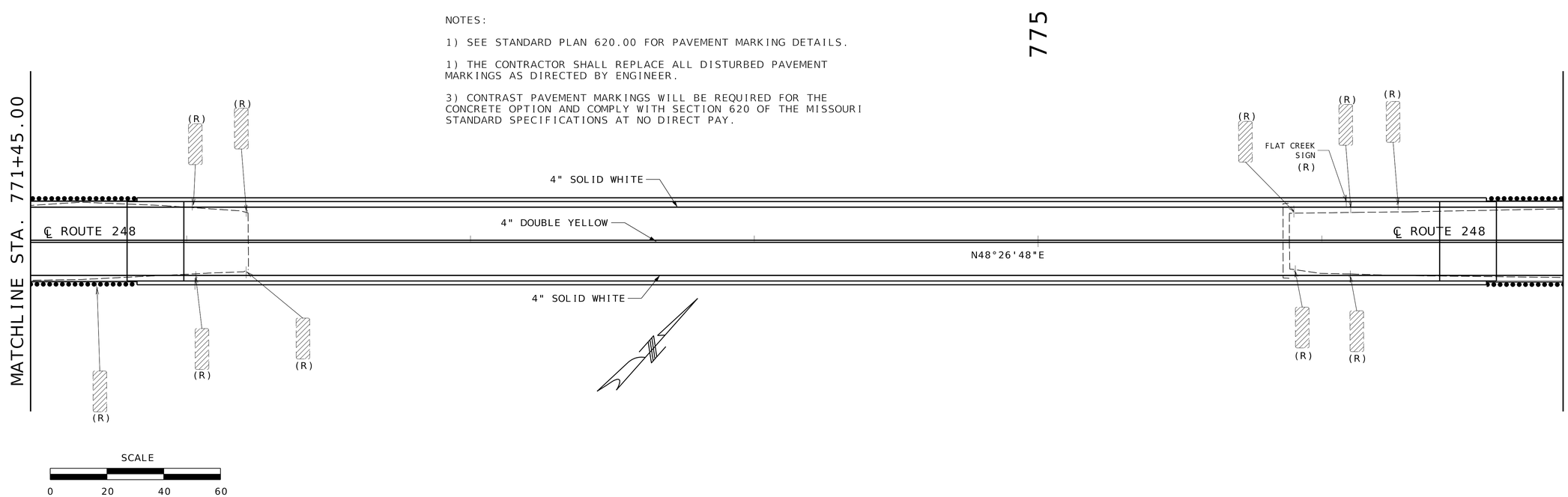

SIGNING AND PAVEMENT MARKING SHEET 1 OF 2

2025.07.22 09:18:27-05'00'

STATE OF MISSOURI
JADRIENNE S. RODELL-TIPTON
NUMBER
PE-2021032725
PROFESSIONAL ENGINEER

THIS SHEET HAS BEEN SIGNED, SEALED AND DATED ELECTRONICALLY.

DATE PREPARED	
7/22/2025	
ROUTE	STATE
248	MO
DISTRICT	SHEET NO.
SW	22
COUNTY	
BARRY	
JOB NO.	
JSR0119	
CONTRACT ID.	
PROJECT NO.	
BRIDGE NO.	
A9432	

DATE	DESCRIPTION

MISSOURI HIGHWAYS AND TRANSPORTATION COMMISSION
105 WEST CAPITOL
JEFFERSON CITY, MO 65102
1-888-ASK-MODOT (1-888-275-6636)

POWELL CWM
ARCHITECTURE/ENGINEERING/SURVEYING
3200 S. State Route 291, Bldg. 1, Independence, MO 64057
816.373.4800 | powellcwm.com

Certificates of Authority
Architecture: MO 310 / KS 73
Engineering: MO 4 / KS 241
Land Surveying: MO 123 / KS 36

REV.

SN_01-02_JSR0119_I20.dgn 8:38:07 AM 7/22/2025

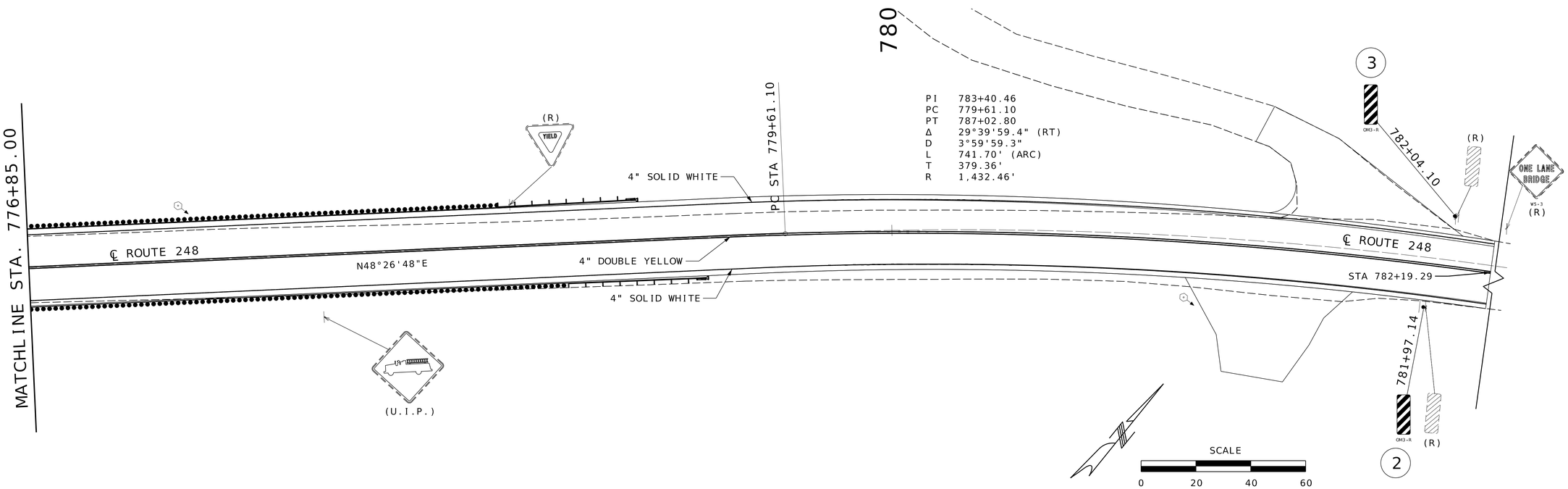

NOTES:

1) SEE STANDARD PLAN 620.00 FOR PAVEMENT MARKING DETAILS

1) THE CONTRACTOR SHALL REPLACE ALL DISTURBED PAVEMENT MARKINGS AS DIRECTED BY ENGINEER.

3) CONTRAST PAVEMENT MARKINGS WILL BE REQUIRED FOR THE CONCRETE OPTION AND COMPLY WITH SECTION 620 OF THE MISSOURI STANDARD SPECIFICATIONS AT NO DIRECT PAY.

SIGNING AND PAVEMENT MARKING SHEET 2 OF 2

2025.07.22 09:17:52-05'00'

STATE OF MISSOURI
JADRIENNE S. RODELL-TIPTON
NUMBER
PE-2021032725
PROFESSIONAL ENGINEER

THIS SHEET HAS BEEN SIGNED, SEALED AND DATED ELECTRONICALLY.

DATE PREPARED
7/22/2025

ROUTE	STATE
248	MO
DISTRICT	SHEET NO.
SW	23

COUNTY
BARRY

JOB NO.
JSR0119

CONTRACT ID.

PROJECT NO.

BRIDGE NO.
A9432

DATE	DESCRIPTION

MISSOURI HIGHWAYS AND TRANSPORTATION COMMISSION
105 WEST CAPITOL
JEFFERSON CITY, MO 65102
1-888-ASK-MODOT (1-888-275-6636)

POWELL CWM
ARCHITECTURE/ENGINEERING/SURVEYING
3200 S. State Route 291, Bldg. 1, Independence, MO 64057
816.373.4800 | powellcwm.com

Certificates of Authority
Architecture: MO 310 / KS 73
Engineering: MO 4 / KS 241
Land Surveying: MO 123 / KS 36

REV.

SN_01-02_JSR0119_I20.dgn 8:38:08 AM 7/22/2025

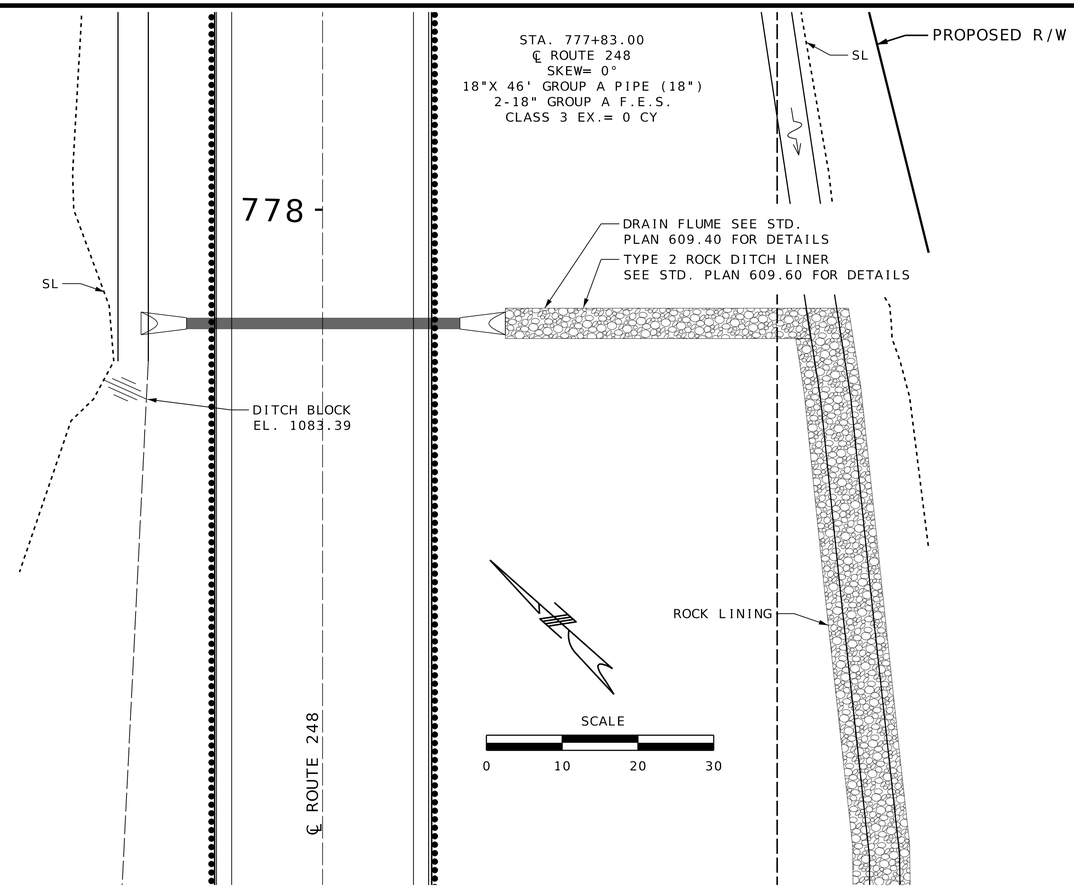

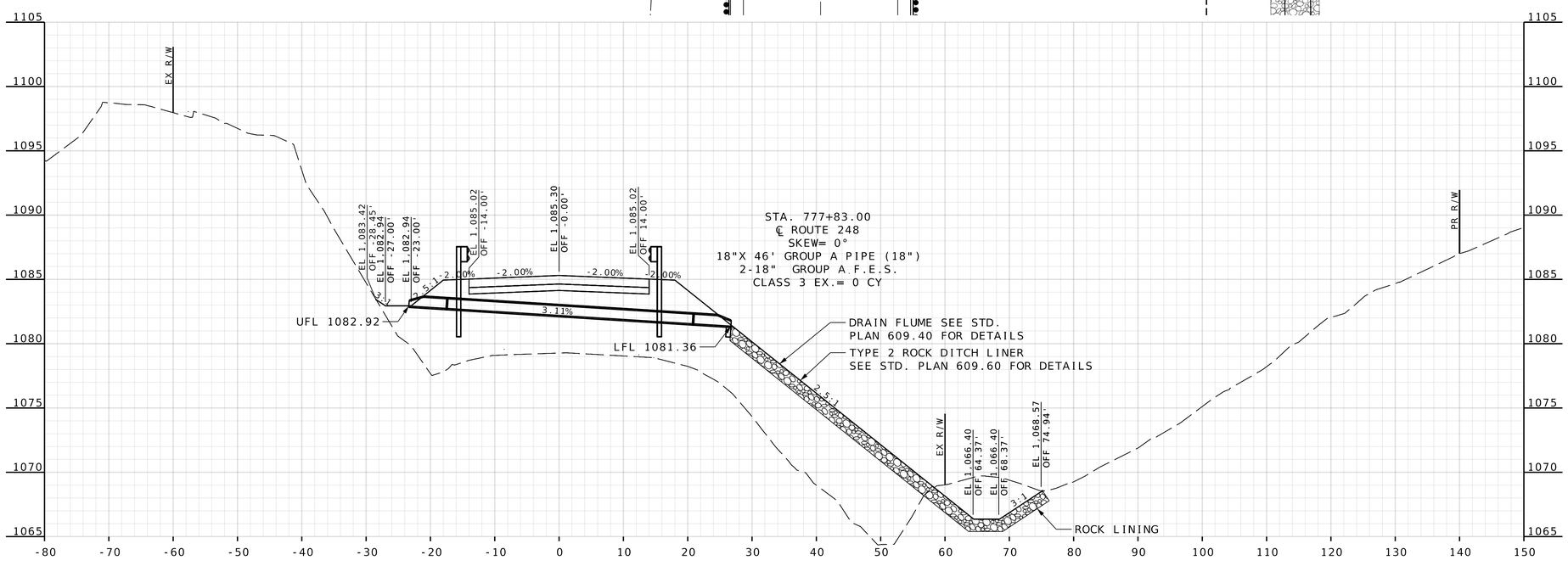

CULVERT SECTION
SHEET 1 OF 1

Digitally signed by Grant Luckenbill
Date: 2025.09.25 14:39:18-05'00'

GRANT C. LUCKENBILL
NUMBER
PE-2012018100
25-25
GRANT C. LUCKENBILL—ENGINEER
MO# PE-2012018100

DATE PREPARED	
9/23/2025	
ROUTE 248	STATE MO
DISTRICT SW	SHEET NO. 24
COUNTY BARRY	
JOB NO. JSR0119	
CONTRACT ID.	
PROJECT NO.	
BRIDGE NO. A9432	

DATE	DESCRIPTION

MISSOURI HIGHWAYS AND TRANSPORTATION COMMISSION
105 WEST CAPITOL
JEFFERSON CITY, MO 65102
1-888-ASK-MODOT (1-888-275-6636)

olsson
550 ST. LOUIS STREET
SPRINGFIELD, MO 65806
PHONE: 417.890.8802
CERTIFICATE OF AUTHORITY NO. 001592

IF A SEAL IS PRESENT ON THIS SHEET IT HAS BEEN ELECTRONICALLY SEALED AND DATED.

F:\2023\04001-04500\023-04082\40-Design\Microstation\JSR0119\023-04082_JSR0119\plan_sheets\14 Culvert Sections\024_CS_01_JSR0119_110.dgn 3:48:08 PM 9/23/2025

SEC/SUR 19 TWP 24N RGE 25W

(115'-115'-80'-130') PRESTRESSED CONCRETE NU-GIRDER SPANS

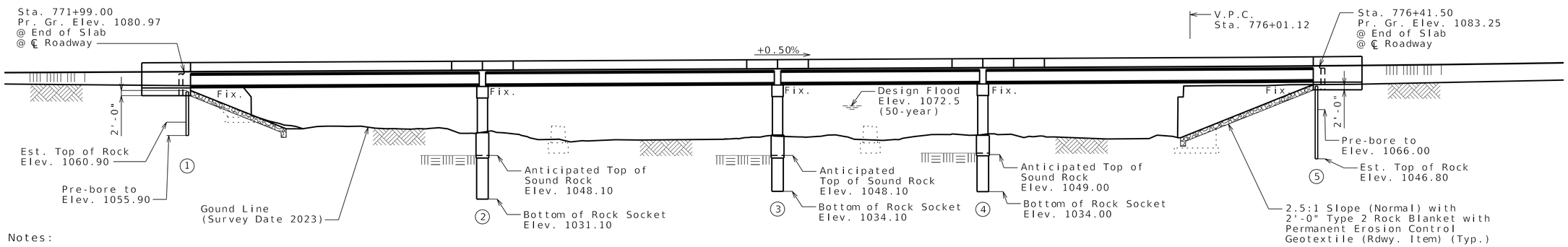

Notes:

For General Notes, Estimated Quantities, Estimated Quantities for Slab on Concrete NU-Girder, Hydrologic Data, Location Sketch and Foundation Data, see Sheet No. 2.

Roadway fill shall be completed to the final roadway section and up to the elevation of the bottom of the concrete beam within the limits of the structure and for not less than 25 feet in back of the fill face of the end bents before any piles are driven for any bents falling within the embedment section.

Existing roadway fill under the ends of the bridge shall be removed as shown. Removal of existing roadway fill will be considered completely covered by the contract unit price for roadway excavation.

GENERAL ELEVATION

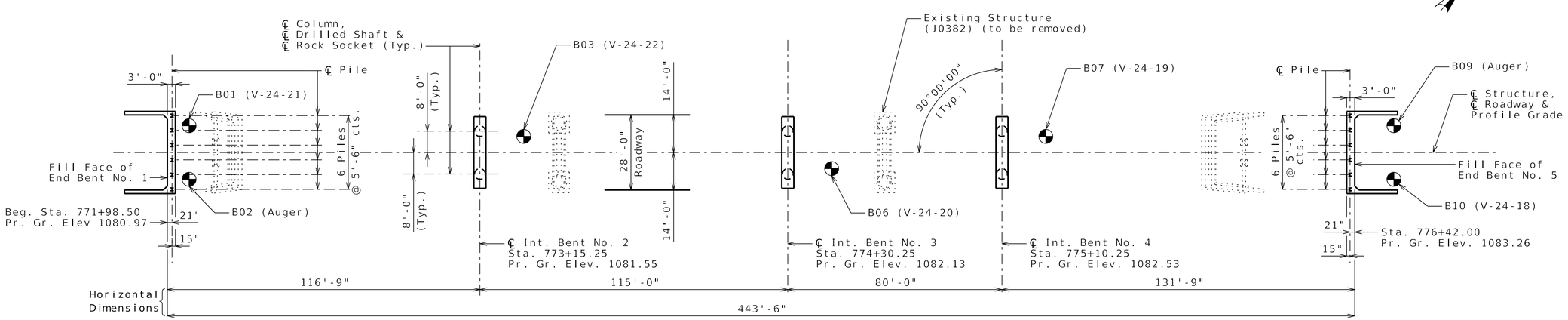

PLAN

Indicates location of borings.

Notice and Disclaimer Regarding Boring Log Data

The locations of all subsurface borings for this structure are shown on the plan sheet(s) for this structure. The boring data for all locations indicated, as well as any other boring logs or other factual records of subsurface data and investigations performed by the department for the design of the project, are shown on Sheet(s) No. 31-36 and may be included in the Electronic Bridge Deliverables. They will also be available from the Project Contact upon written request. No greater significance or weight should be given to the boring data depicted on the plan sheets than is given to the subsurface data available from the district or elsewhere.

The Commission does not represent or warrant that any such boring data accurately depicts the conditions to be encountered in constructing this project. A contractor assumes all risks it may encounter in basing its bid prices, time or schedule of performance on the boring data depicted here or those available from the district, or on any other documentation not expressly warranted, which the contractor may obtain from the Commission.

BM#1-SQUARE CUT ON BRIDGE WALL
STA. 776+07.91, 14.86' LT, ELEV. 1075.86
BM#2-SQUARE CUT ON BRIDGE WALL
STA. 772+13.63, 13.68' RT, ELEV. 1075.85

BRIDGE: ROUTE 248 OVER FLAT CREEK

ROUTE 248 FROM ROUTE C TO ROUTE 39
ABOUT 0.5 MILES WEST OF ROUTE 39
BEGINNING STATION 771+98.50

Designed Feb. 2024
Detailed May 2024
Checked Aug. 2024

Note: This drawing is not to scale. Follow dimensions.

Digitally signed by Grant Luckenbill
Date: 2025.08.06 10:03:50-05'00'

GRANT C. LUCKENBILL
NUMBER
PE-2012018100

8-6-25
GRANT C. LUCKENBILL-ENGINEER
MO# PE-2012018100

DATE PREPARED	
8/5/2025	
ROUTE 248	STATE MO
DISTRICT BR	SHEET NO. 1
COUNTY BARRY	
JOB NO. JSR0119	
CONTRACT ID.	
PROJECT NO.	
BRIDGE NO. A9432	

DESCRIPTION

DATE

MISSOURI HIGHWAYS AND TRANSPORTATION COMMISSION
105 WEST CAPITOL
JEFFERSON CITY, MO 65102
1-888-ASK-MODOT (1-888-275-6636)

IF A SEAL IS PRESENT ON THIS SHEET IT HAS BEEN ELECTRONICALLY SEALED AND DATED.

olsson
550 ST. LOUIS STREET
SPRINGFIELD, MO 65806
PHONE: 417.890.8802
CERTIFICATE OF AUTHORITY NO. 001592

Estimated Quantities

Item		Substr.	Superstr.	Total
Class 1 Excavation	cu. yard	65		65
Removal of Bridges (J0382)	lump sum			1
Bridge Approach Slab (Minor)	sq. yard		126	126
Drilled Shafts (5 ft. 0 in. Dia.)	linear foot	44.0		44.0
Rock Sockets (4 ft. 6 in. Dia.)	linear foot	92.0		92.0
Video Camera Inspection	each	6		6
Foundation Inspection Holes	linear foot	152.0		152.0
Sonic Logging Testing	each	6		6
Galvanized Structural Steel Piles (14 in.)	linear foot	270		270
Pre-Bore for Piling	linear foot	144		144
Pile Point Reinforcement	each	12		12
Class B Concrete (Substructure)	cu. yard	145.7		145.7
Type D Barrier	linear foot		951	951
Slab on Concrete NU-Girder	sq. yard		1,508	1,508
NU 63, Prestressed Concrete NU-Girder	linear foot		1,318	1,318
Reinforcing Steel (Bridges)	pound	39,740		39,740
Steel Intermediate Diaphragm for P/S Concrete Girders	each		14	14
Slab Drain	each		82	82
Vertical Drain at End Bents	each			2
Plain Neoprene Bearing Pad	each		6	6
Laminated Neoprene Bearing Pad	each		18	18

All concrete above the construction joint in the end bents is included in the Estimated Quantities for Slab on Concrete NU-Girder.

All reinforcement in the end bents is included in the Estimated Quantities for Slab on Concrete NU-Girder.

All reinforcement in the intermediate bent concrete diaphragms except reinforcement embedded in the beam cap is included in the Estimated Quantities for Slab on Concrete NU-Girder.

All concrete above the intermediate beam cap is included in the Estimated Quantities for Slab on Concrete NU-Girder.

Estimated Quantities for Slab on Concrete NU-Girder

Item		Total
Class B-2 Concrete	cu. yard	475
Reinforcing Steel (Epoxy Coated)	pound	135,300

The table of Estimated Quantities for Slab on Concrete NU-Girder represents the quantities used by the State in preparing the cost estimate for concrete slabs. The area of the concrete slab will be measured to the nearest square yard longitudinally from end of slab to end of slab and transversely from out to out of bridge slab (or with the horizontal dimensions as shown on the plan of slab). Payment for stay-in-place corrugated steel forms, conventional forms, all concrete and epoxy coated reinforcing steel will be considered completely covered by the contract unit price for the slab. Variations may be encountered in the estimated quantities but the variations cannot be used for an adjustment in the contract unit price.

Method of forming the slab shall be as shown on the plans and in accordance with Sec 703. All hardware for forming the slab to be left in place as a permanent part of the structure shall be coated in accordance with ASTM A123 or ASTM B633 with a thickness class SC 4 and a finish type I, II or III.

Slab shall be cast-in-place with conventional forms or stay-in-place corrugated steel forms. Precast panels will not be permitted.

General Notes:

Design Specifications
2020 AASHTO LRFD Bridge Design Specifications (9th Ed.)
Seismic Design Category = A (Nonseismic)
Design earthquake response spectral acceleration coefficient at 1.0 second period, $S_{D1} < 0.15$
Acceleration Coefficient (effective peak ground acceleration coefficient), $A_S = 0.063$

Design Loading:
Vehicular = HL-93
Future Wearing Surface = 35 lb/sf
Earth = 120 lb/cf
Equivalent Fluid Pressure = 45 lb/cf
Superstructure: Simply-Supported, non-composite for dead load.
Continuous Composite for live load.

Design Unit Stresses:

Class B Concrete (Substructure, except Drilled Shafts & Rock Sockets)	f'c = 3,000 psi
Class B-2 Concrete (Drilled Shafts & Rock Sockets)	f'c = 4,000 psi
Class B-1 Concrete (Barrier)	f'c = 4,000 psi
Class B-2 Concrete (Superstructure, except Prestressed Girders and Barrier)	f'c = 4,000 psi
Reinforcing Steel (ASTM A615 Grade 60)	fy = 60,000 psi
Structural Steel HP Pile (ASTM A709 Grade 50)	fy = 50,000 psi

For prestressed girder stresses, see Sheets No. 9 thru 16.

Neoprene Pads:
Neoprene bearing pads shall be 60 durometer and shall be in accordance with Sec 716.

Joint Filler:
All joint filler shall be in accordance with Sec 1057 for preformed sponge rubber expansion and partition joint filler, except as noted.

Reinforcing Steel:
Minimum clearance to reinforcing steel shall be 1 1/2", unless otherwise shown.

Traffic Handling:
Structure to be closed during construction. Traffic to be maintained on other routes during construction. See roadway plans for traffic control.

Foundation Data

Type	Design Data		Bent Number 1	2	3	4	5
Load Bearing Pile	Pile Type and Size		HP 14x73	---	---	---	HP 14X73
	Number	ea	6	---	---	---	6
	Approximate Length Per Each	ft	17	---	---	---	28
	Pile Point Reinforcement	ea	All	---	---	---	All
	Min. Galvanized Penetration (Elev.)	ft	Full Length	---	---	---	Full Length
	Pile Driving Verification Method		DF *	---	---	---	DF *
	Resistance Factor		0.4	---	---	---	0.4
	Minimum Nominal Axial Compressive Resistance	kip	593	---	---	---	639
Rock Socket	Number	ea	---	2	2	2	---
	Minimum Nominal Axial Compressive Resistance (Tip Resistance)	ksf	---	140.8	112.7	137.0	---

DF = FHWA-modified Gates Dynamic Pile Formula

WEAP = Wave Equation Analysis of Piles

Minimum Nominal Axial Compressive Resistance = $\frac{\text{Maximum Factored Loads}}{\text{Resistance Factor}}$

All pile shall be galvanized down to the minimum galvanized penetration (elevation).

Pile point reinforcement need not be galvanized. Shop drawings will not be required for pile point reinforcement.

Pre-bore for piles at Bents No. 1 and 5 to elevations 1055.90 and 1066.00, respectively.

*HP piles are anticipated to be driven to refusal on rock. Review all borings for depth of rock and restrict driving as appropriate to comply with hard rock driving criteria in accordance with Sec 702. When pile refusal on rock occurs, as approved by the engineer, the minimum nominal axial compressive resistance is verified and no additional pile driving verification method is required.

Hydrologic Data

Drainage Area = 217 mi^2
Design Flood Frequency = 50 years
Design Flood Discharge = 35,500 cfs
Design Flood (D.F.) Elevation = 1072.5
Base Flood (100-year)
Base Flood Elevation = 1073.6
Base Flood Discharge = 41,500 cfs
Estimated Backwater = 1.3 ft
Average Velocity thru Opening = 8.1 ft/s
Freeboard (50-year)
Freeboard = 2.3 ft
Roadway Overtopping
Overtopping Flood Discharge = N/A
Overtopping Flood Frequency => 500 years
500-Year Flood Elevation = 1075.9

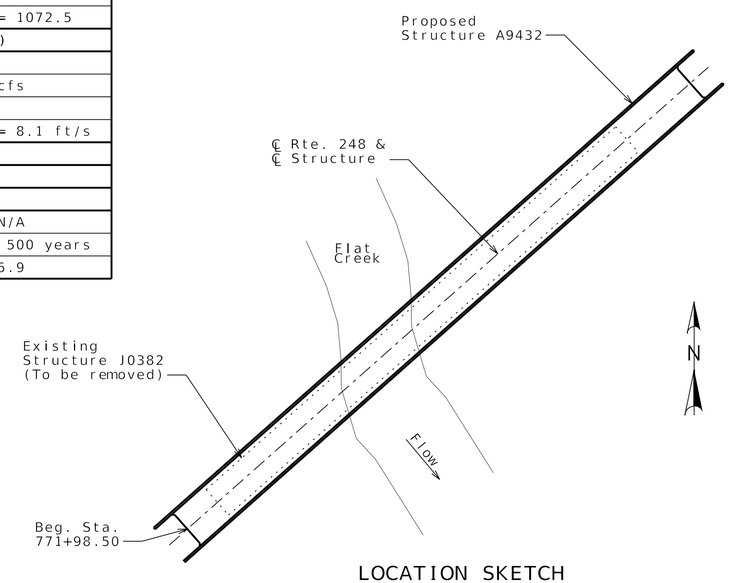

LOCATION SKETCH

Detailed May 2024
Checked Aug. 2024

Note: This drawing is not to scale. Follow dimensions.

Digitally signed by Grant Luckenbill
Date: 2025.08.06 10:03:26-05'00'
GRANT C. LUCKENBILL NUMBER PE-2012018100
8-6-25
GRANT C. LUCKENBILL-ENGINEER
MO# PE-2012018100

DATE PREPARED 8/5/2025
ROUTE 248 | STATE MO
DISTRICT BR | SHEET NO. 2
COUNTY BARRY
JOB NO. JSR0119
CONTRACT ID.
PROJECT NO.
BRIDGE NO. A9432

DESCRIPTION	DATE

IF A SEAL IS PRESENT ON THIS SHEET IT HAS BEEN ELECTRONICALLY SEALED AND DATED.

MISSOURI HIGHWAYS AND TRANSPORTATION COMMISSION
105 WEST CAPITOL
JEFFERSON CITY, MO 65102
1-888-ASK-MODOT (1-888-275-6636)

olsson
550 ST. LOUIS STREET
SPRINGFIELD, MO 65806
PHONE: 417.890.8802
CERTIFICATE OF AUTHORITY NO. 001592

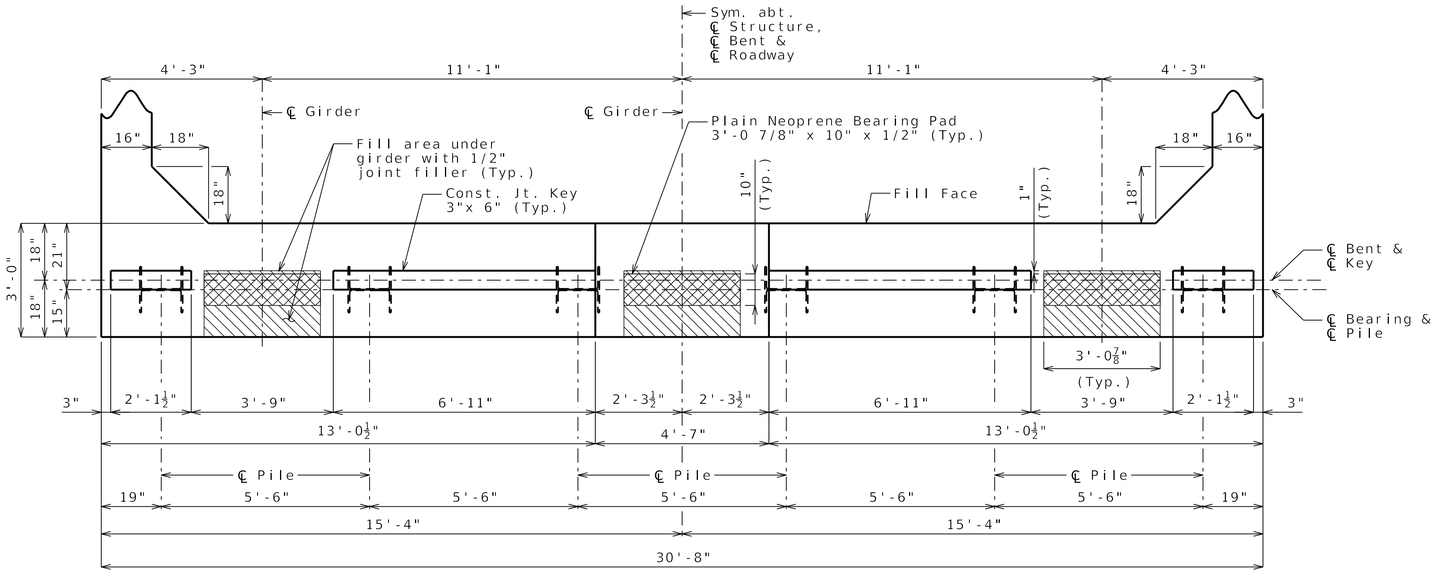

PLAN OF BEAM

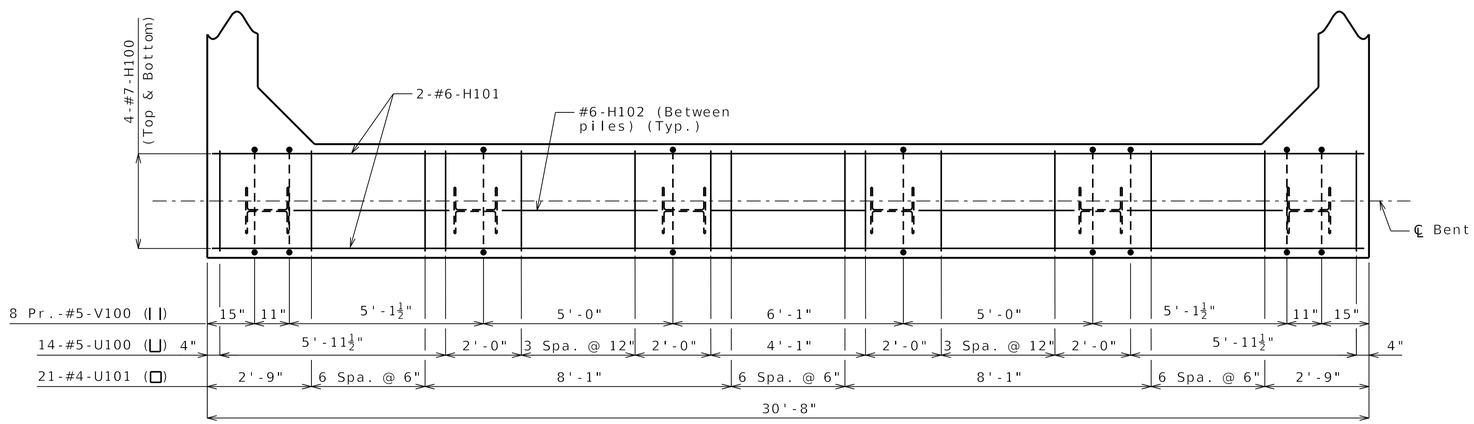

PLAN OF BEAM SHOWING REINFORCEMENT
(Keys and steps not shown for clarity.)

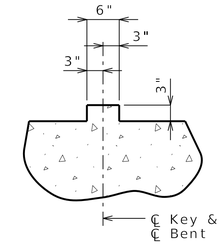

SECTION THRU KEY

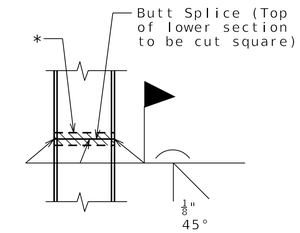

STEEL PILE SPLICE
(If required)

* Galvanizing material shall be omitted or removed one inch clear of weld locations in accordance with Sec 702.

Substructure Quantity Table for Bent No. 1		
Item		Quantity
Class 1 Excavation	cu. yard	40
Galvanized Structural Steel Piles (14 in.)	linear foot	102
Pre-Bore for Piling	linear foot	96
Pile Point Reinforcement	each	6
Class B Concrete (Substructure)	cu. yard	15.5

Substructure Quantity Table for Bent No. 5		
Item		Quantity
Class 1 Excavation	cu. yard	25
Galvanized Structural Steel Piles (14 in.)	linear foot	168
Pre-Bore for Piling	linear foot	48
Pile Point Reinforcement	each	6
Class B Concrete (Substructure)	cu. yard	15.5

These quantities are included in the Estimated Quantities table on Sheet No. 2.

Notes:

This sheet shall be used as a template for Bents No. 1 & 5. Bar marks shown are applicable for Bent No. 1. The Bill of Reinforcing Steel will use separate bar marks for each bent. This first number in the bar mark will match the corresponding Bent No.

Work this sheet with Sheets No. 4 & 5.

Reinforcing steel shall be shifted to clear piles. U bars shall clear piles by at least 1 1/2 inches.

DETAILS OF END BENTS NO. 1 & 5

Detailed May 2024
Checked Aug. 2024

Note: This drawing is not to scale. Follow dimensions.

F:\2023\04001-04500\023-04082\40-Design\Microstation\JSR0119\023-04082_JSR0119\plan_sheets\16 Bridge Sheets\B_A9432_003_JSR0119_END BENT 1 DETAILS (1 of 3).dgn 8:21:36 AM 8/5/2025

Digitally signed by Grant Luckenbill
Date: 2025.08.06 10:02:59-05'00'
GRANT C. LUCKENBILL NUMBER PE-2012018100
8-6-25
GRANT C. LUCKENBILL-ENGINEER
MO# PE-2012018100

DATE PREPARED 8/5/2025

ROUTE	STATE
248	MO
DISTRICT	SHEET NO.
BR	3

COUNTY BARRY
JOB NO. JSR0119
CONTRACT ID.
PROJECT NO.
BRIDGE NO. A9432

DATE	DESCRIPTION

IF A SEAL IS PRESENT ON THIS SHEET IT HAS BEEN ELECTRONICALLY SEALED AND DATED.

MISSOURI HIGHWAYS AND TRANSPORTATION COMMISSION
105 WEST CAPITOL
JEFFERSON CITY, MO 65102
1-888-ASK-MODOT (1-888-275-6636)

olsson
550 ST. LOUIS STREET
SPRINGFIELD, MO 65806
PHONE: 417.890.8802
CERTIFICATE OF AUTHORITY NO. 001592

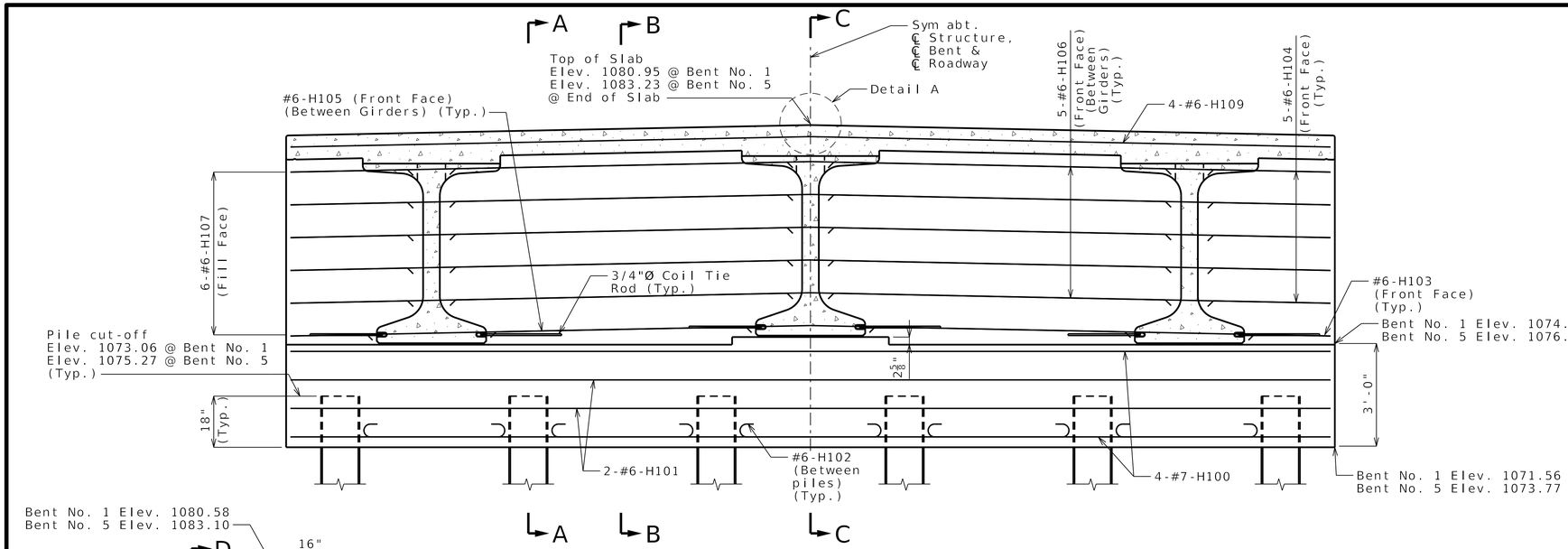

SECTION NEAR END BENT

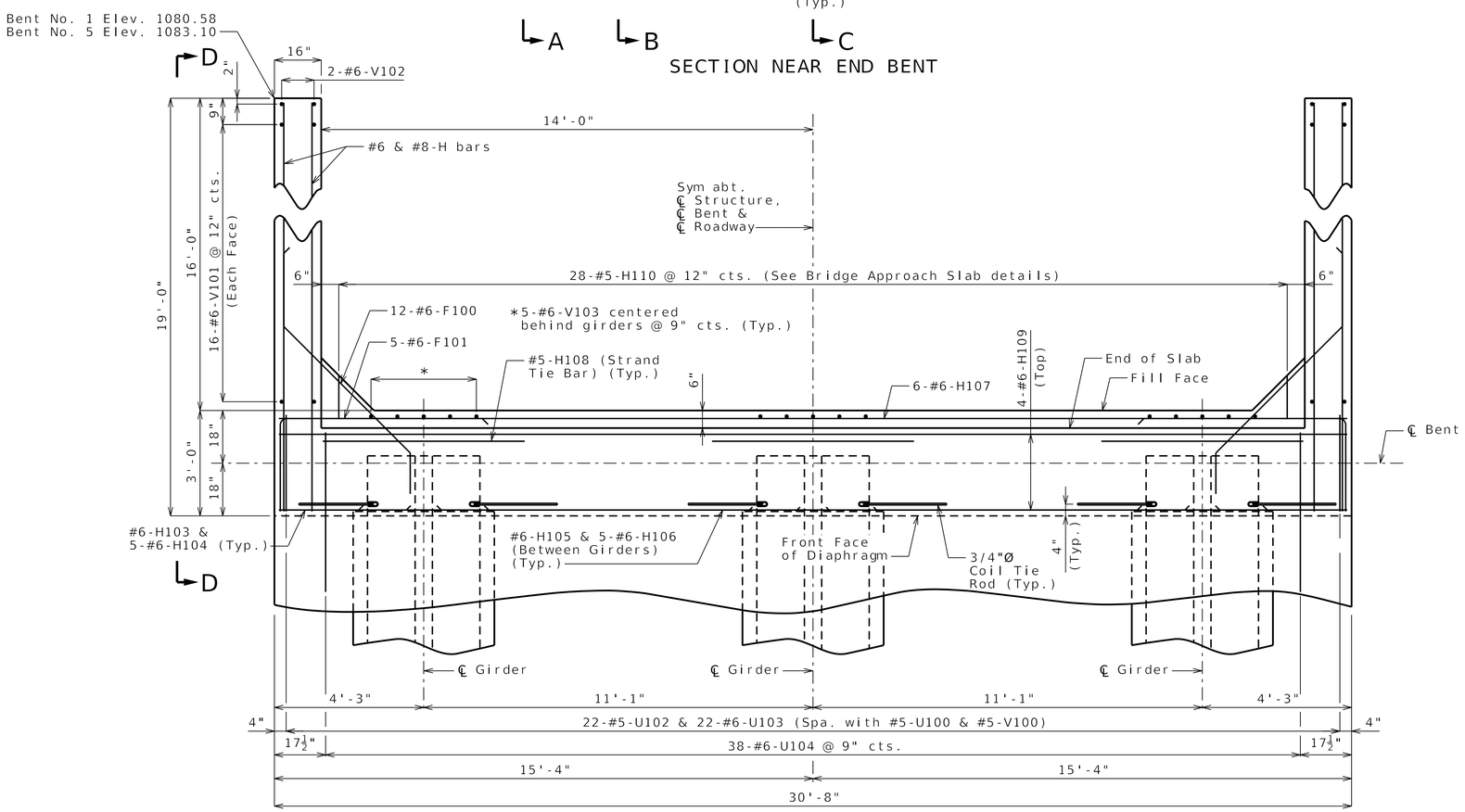

PART PLAN

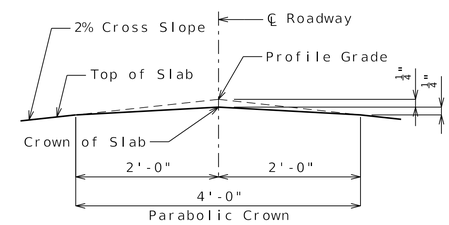

DETAIL A

DETAILS OF END BENTS NO. 1 & 5

Notes:

This sheet shall be used as a template for Bents No. 1 & 5. Bar marks shown are applicable for Bent No. 1. The Bill of Reinforcing Steel will use separate bar marks for each bent. The first number in the bar mark will match the corresponding Bent No.

Work this sheet with Sheets No. 3 & 5.

The #6-F100 bars shall be bent in the field to clear griders.

All concrete in the end bent above top of beam and below top of slab shall be Class B-2.

Strands at the ends of girders shall be field bent or, if necessary, cut in field to maintain 1 1/2 inch minimum clearance to fill face of end bent.

For location of coil tie roads and #5-H108 (strand tie bar), see Sheets No. 9 thru 10 & 15 thru 16.

For details of Vertical Drain at End Bents, see Sheet No. 6.

For details for Bridge Approach Slab, see Sheet No. 26.

For Sections A-A, B-B & C-C and Elevation D-D, see Sheet No. 5.

Detailed May 2024
Checked Aug. 2024

Note: This drawing is not to scale. Follow dimensions.

F:\2023\04001-04500\023-04082\40-Design\Microstation\JSR0119\023-04082_JSR0119\plan_sheets\16 Bridge Sheets\B_A9432_004_JSR0119_END BENT 1 DETAILS (2 of 3).dgn 8:21:38 AM 8/5/2025

Digitally signed by Grant Luckenbill
Date: 2025.08.06 10:03:42-05'00'

GRANT C. LUCKENBILL NUMBER PE-2012018100

8-6-25
GRANT C. LUCKENBILL–ENGINEER
MO# PE–2012018100

DATE PREPARED	
8/5/2025	
ROUTE 248	STATE MO
DISTRICT BR	SHEET NO. 4
COUNTY BARRY	
JOB NO. JSR0119	
CONTRACT ID.	
PROJECT NO.	
BRIDGE NO. A9432	

DATE	DESCRIPTION

MISSOURI HIGHWAYS AND TRANSPORTATION COMMISSION
105 WEST CAPITOL
JEFFERSON CITY, MO 65102
1-888-ASK-MODOT (1-888-275-6636)

olsson
550 ST. LOUIS STREET
SPRINGFIELD, MO 65806
PHONE: 417.890.8802
CERTIFICATE OF AUTHORITY NO. 001592

IF A SEAL IS PRESENT ON THIS SHEET IT HAS BEEN ELECTRONICALLY SEALED AND DATED.

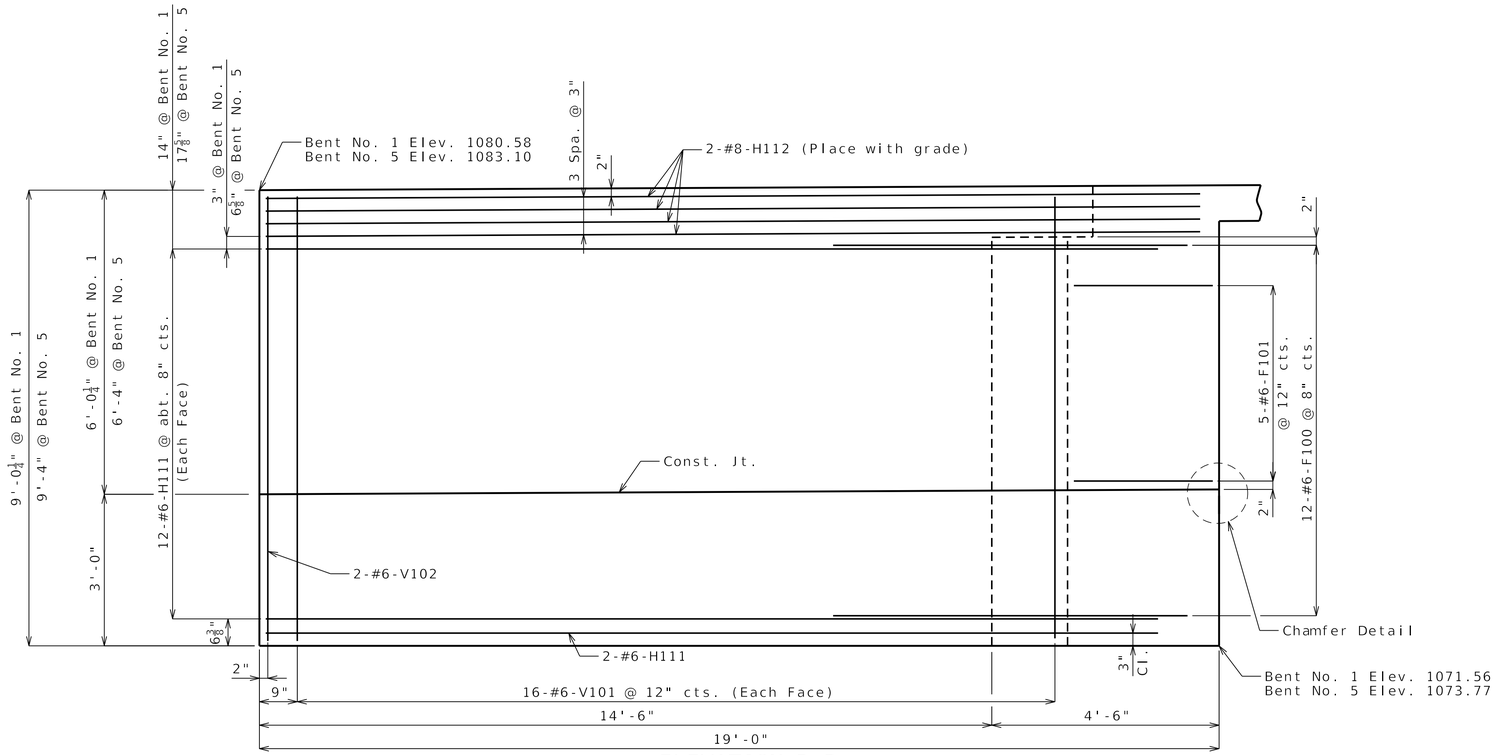

ELEVATION D-D
(End Bent No. 1 shown, End Bent No. 5 similar.)

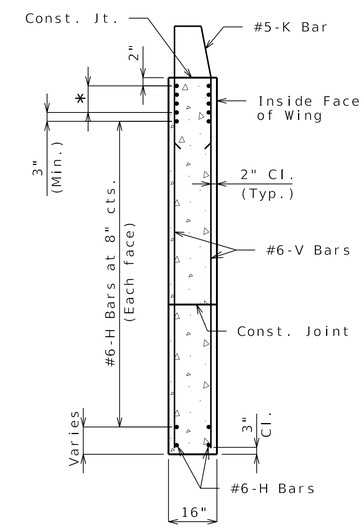

TYPICAL SECTION THRU WING
* #8-H Bars at 3" cts.
(Each face) (Place with grade)

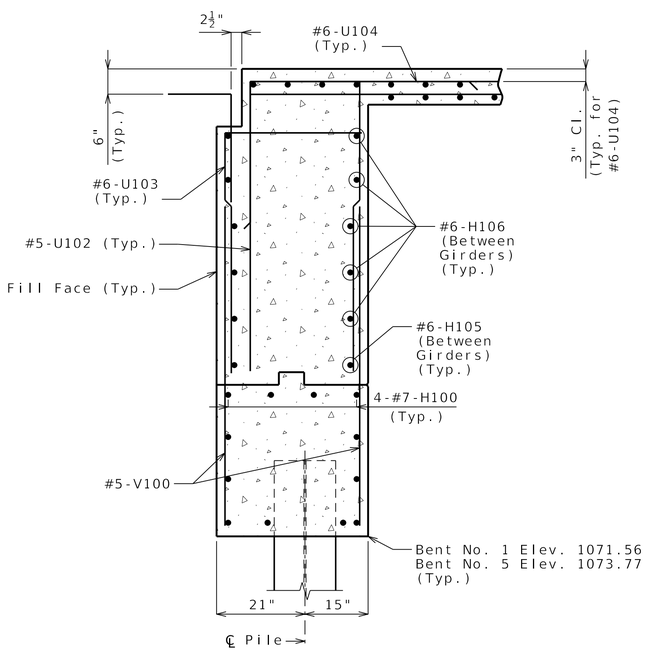

SECTION A-A

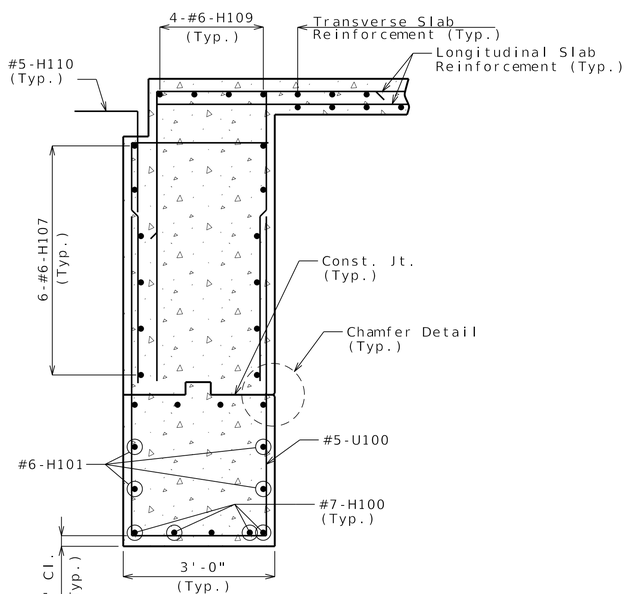

SECTION B-B

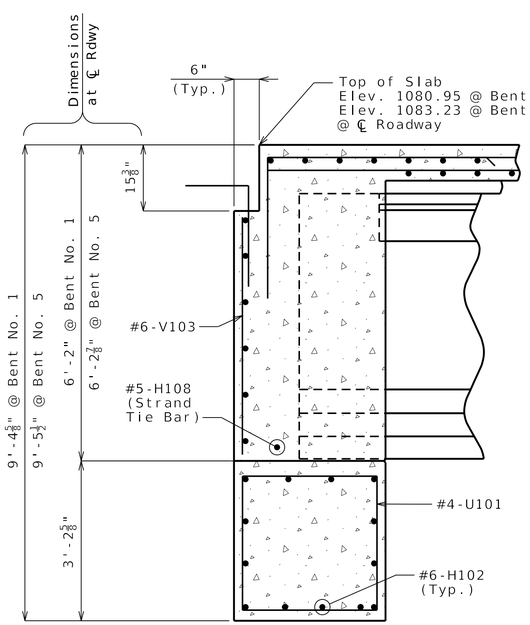

SECTION C-C

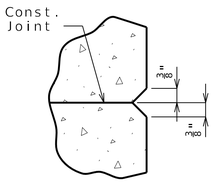

CHAMFER DETAIL

Notes:

Work this sheet with Sheets No. 3 & 4.

For reinforcement of the barrier, see Sheet No. 25.

DETAILS OF END BENTS NO. 1 & 5

Detailed May 2024
Checked Aug. 2024

Note: This drawing is not to scale. Follow dimensions.

F:\2023\04001-04500\023-04082\40-Design\Microstation\JSR0119\023-04082_JSR0119\plan_sheets\16 Bridge Sheets\B_A9432_005_JSR0119_END BENT 1 DETAILS (3 of 3).dgn 8:21:40 AM 8/5/2025

Digitally signed by Grant Luckenbill
Date: 2025.08.06 10:03:17-05'00'

GRANT C. LUCKENBILL
NUMBER
PE-2012018100

8-6-25
GRANT C. LUCKENBILL-ENGINEER
MO# PE-2012018100

DATE PREPARED	
8/5/2025	
ROUTE 248	STATE MO
DISTRICT BR	SHEET NO. 5
COUNTY BARRY	
JOB NO. JSR0119	
CONTRACT ID.	
PROJECT NO.	
BRIDGE NO. A9432	

DATE	DESCRIPTION

IF A SEAL IS PRESENT ON THIS SHEET IT HAS BEEN ELECTRONICALLY SEALED AND DATED.

MISSOURI HIGHWAYS AND TRANSPORTATION COMMISSION
105 WEST CAPITOL
JEFFERSON CITY, MO 65102
1-888-ASK-MODOT (1-888-275-6636)

olsson
550 ST. LOUIS STREET
SPRINGFIELD, MO 65806
PHONE: 417.890.8802
CERTIFICATE OF AUTHORITY NO. 001592

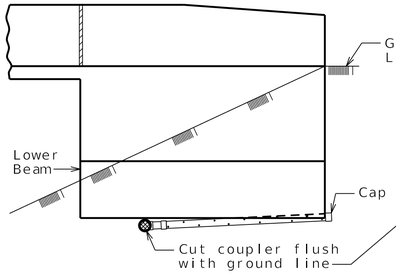

ELEVATION OF WING

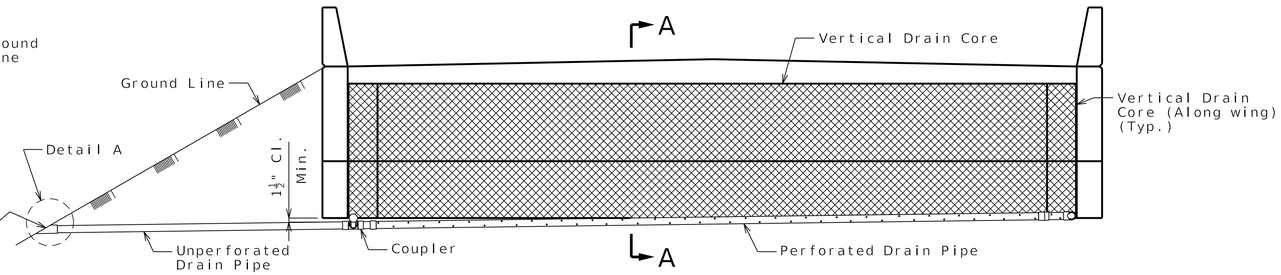

ELEVATION OF END BENT

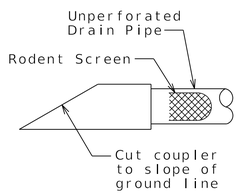

DETAIL A

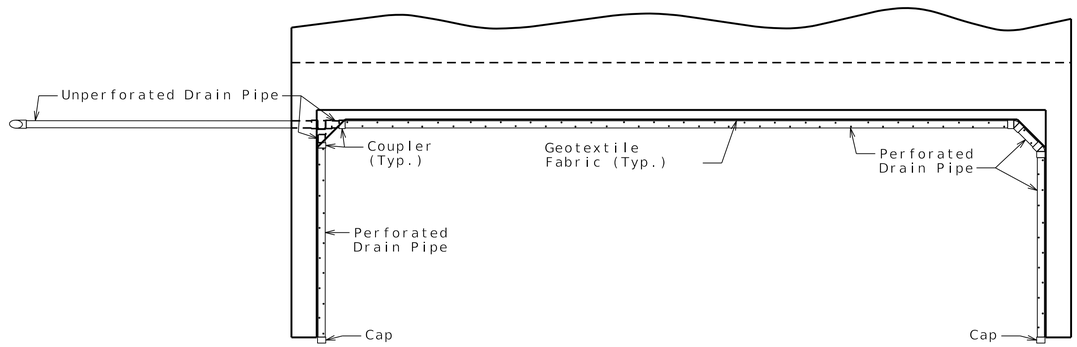

PLAN OF END BENT

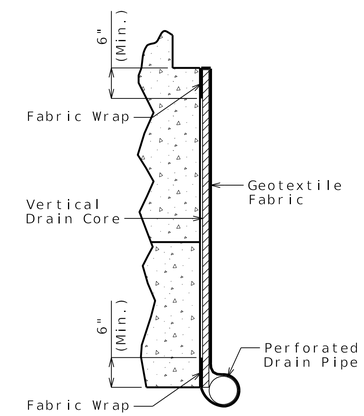

PART SECTION A-A
(Section thru wing similar)

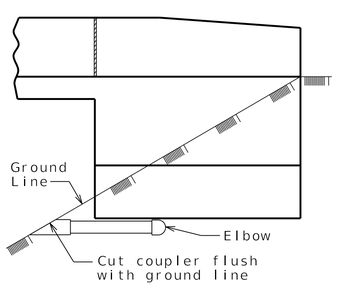

ELEVATION OF WING

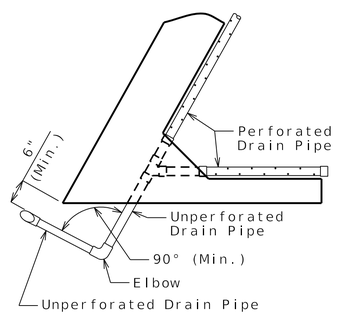

PART PLAN

OPTIONAL TURNED DRAIN
(Use only when straight drain is not practical.)

General Notes:

All drain pipe shall be sloped 1 to 2 percent.

Drain pipe may be either 6-inch diameter corrugated metallic-coated steel pipe underdrain, 4-inch diameter corrugated polyvinyl chloride (PVC) drain pipe, or 4-inch diameter corrugated polyethylene (PE) drain pipe.

Drain pipe shall be placed at fill face of end bent and inside face of wings. The pipe shall slope to lowest grade of ground line, also missing the lower beam of end bent by a minimum of 1 1/2 inches.

Perforated pipe shall be placed at fill face side and inside face of wings at the bottom of end bent and plain pipe shall be used where the vertical drain ends to the exit at ground line.

VERTICAL DRAIN AT END BENTS

Detailed May 2024
Checked Aug. 2024

Note: This drawing is not to scale. Follow dimensions.

Digitally signed by Grant Luckenbill
Date: 2025.08.06 10:02:40-05'00'

GRANT C. LUCKENBILL
NUMBER
PE-2012018100

8-6-25
GRANT C. LUCKENBILL-ENGINEER
MO# PE-2012018100

DATE PREPARED	
8/5/2025	
ROUTE 248	STATE MO
DISTRICT BR	SHEET NO. 6
COUNTY BARRY	
JOB NO. JSR0119	
CONTRACT ID.	
PROJECT NO.	
BRIDGE NO. A9432	

DESCRIPTION	DATE

IF A SEAL IS PRESENT ON THIS SHEET IT HAS BEEN ELECTRONICALLY SEALED AND DATED.

MISSOURI HIGHWAYS AND TRANSPORTATION COMMISSION
105 WEST CAPITOL
JEFFERSON CITY, MO 65102
1-888-ASK-MODOT (1-888-275-6636)

olsson
550 ST. LOUIS STREET
SPRINGFIELD, MO 65806
PHONE: 417.890.8802
CERTIFICATE OF AUTHORITY NO. 001592

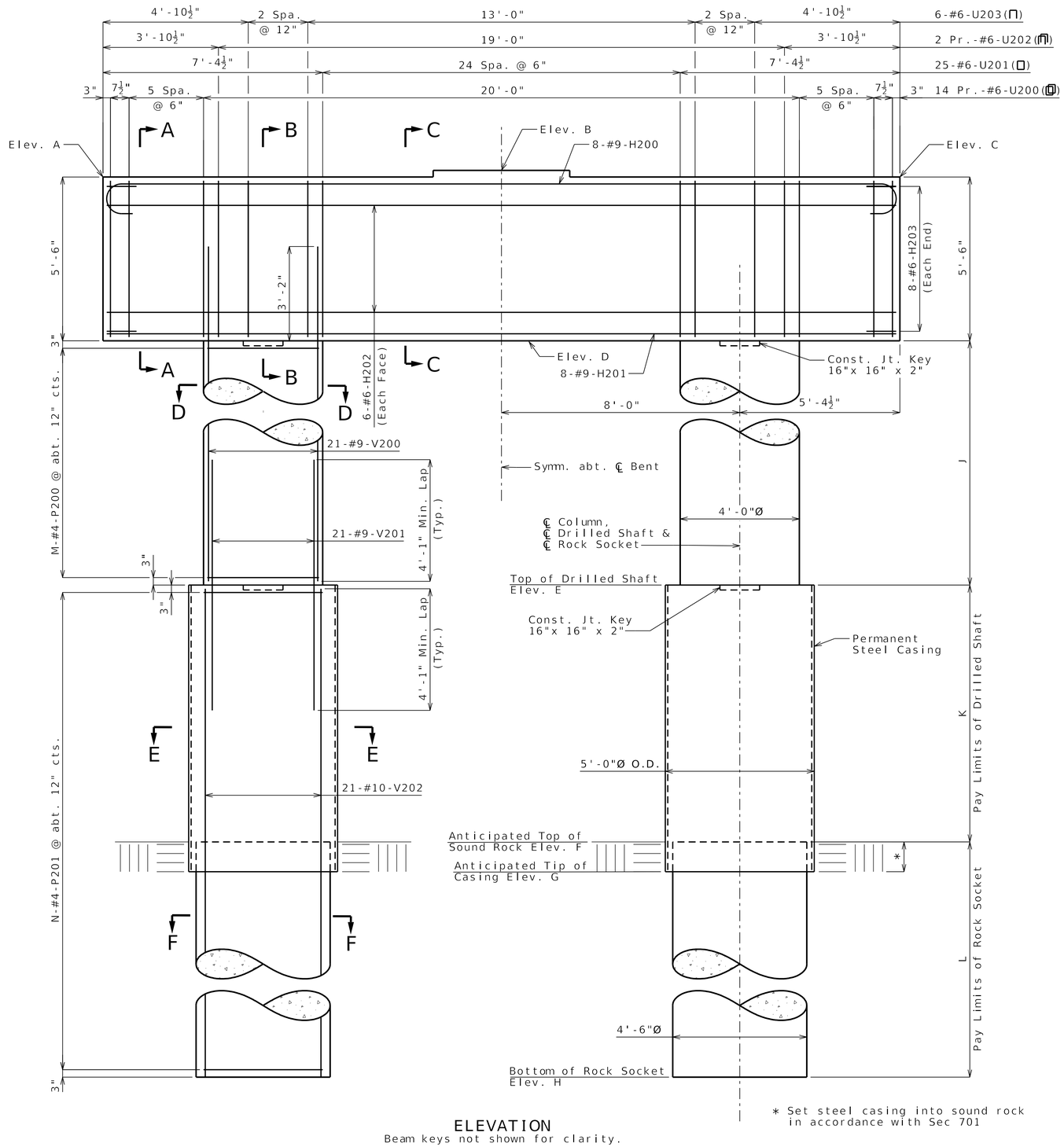

ELEVATION
Beam keys not shown for clarity.

Table of Variables

Variable	Bent No. 2	Bent No. 3	Bent No. 4
A - Girder 1 Seat Elevation	1075.13	1075.75	1076.05
B - Girder 2 Seat Elevation	1075.36	1075.97	1076.27
C - Girder 3 Seat Elevation	1075.13	1075.75	1076.05
D - Bottom of Beam Elevation	1069.63	1070.25	1070.55
E - Top of Drilled Shaft Elev.	1056.10	1055.10	1056.00
F - Anticipated Top of Sound Rock Elev.	1048.10	1048.10	1049.00
G - Anticipated Tip of Casing Elev.	1045.00	1047.00	1048.00
H - Bottom of Rock Socket Elev.	1031.10	1034.10	1034.00
J - Height of Column	13'-6⅜"	15'-1¾"	14'-6⅝"
K - Height of Drilled Shaft	8'-0"	7'-0"	7'-0"
L - Height of Rock Socket	17'-0"	14'-0"	15'-0"
M - No. of #4-P-Bars	15	16	16
N - No. of #4-P-Bars	26	22	23

Substructure Quantity Table for Bent No. 2

Item		Quantity
Drilled Shafts (5 ft. 0 in. Dia.)	linear foot	16.0
Rock Sockets (4 ft. 6 in. Dia.)	linear foot	34.0
Video Camera Inspection	each	2
Foundation Inspection Holes	linear foot	54.0
Sonic Logging Testing	each	2
Class B Concrete (Substructure)	cu. yard	37.4
Reinforcing Steel (Bridges)	pound	13,580

Substructure Quantity Table for Bent No. 3

Item		Quantity
Drilled Shafts (5 ft. 0 in. Dia.)	linear foot	14.0
Rock Sockets (4 ft. 6 in. Dia.)	linear foot	28.0
Video Camera Inspection	each	2
Foundation Inspection Holes	linear foot	48.0
Sonic Logging Testing	each	2
Class B Concrete (Substructure)	cu. yard	38.9
Reinforcing Steel (Bridges)	pound	13,020

Substructure Quantity Table for Bent No. 4

Item		Quantity
Drilled Shafts (5 ft. 0 in. Dia.)	linear foot	14.0
Rock Sockets (4 ft. 6 in. Dia.)	linear foot	30.0
Video Camera Inspection	each	2
Foundation Inspection Holes	linear foot	50.0
Sonic Logging Testing	each	2
Class B Concrete (Substructure)	cu. yard	38.4
Reinforcing Steel (Bridges)	pound	13,140

These quantities are included in the Estimated Quantities Table on Sheet No. 2.

Notes:

This sheet shall be used as a template for Bents No. 2, 3, & 4. Bar marks shown are applicable for Bent No. 2. The Bill of Reinforcing Steel will use separate bar marks for each bent. The first number in the bar mark will match the corresponding Bent No.

The thickness of the permanent steel casing shall be in accordance with Sec 701.

An additional 4 feet has been added to #10-V202 bar lengths and an additional 8-#4-P201 bars have been added in the quantities, if required, for possible change in drilled shaft or rock socket length. The additional V-bar length shall be cut off if not required. The additional P-bars shall be spaced similarly to that shown in elevation, if required, or to a lesser spacing if not required, but not less than 6-inch centers.

Sonic logging testing shall be performed on all drilled shafts and rock sockets.

The cost of any required excavation to the top of the drilled shafts will be considered completely covered by the contract unit price for other items.

Column or dowel reinforcement shall be placed prior to pouring drilled shaft concrete in the area of the lap. Dowel bar or column reinforcement shall not be inserted after drilled shaft pour is complete.

All reinforcement in drilled shafts and rock sockets is included in the Substructure Quantities.

Work this sheet with Sheet No. 8.

DETAILS OF INTERMEDIATE BENTS NO. 2, 3 & 4

Detailed May 2024
Checked Aug. 2024

Note: This drawing is not to scale. Follow dimensions.

Digitally signed by Grant Luckenbill
Date: 2025.08.06 10:02:50-05'00'

GRANT C. LUCKENBILL NUMBER PE-2012018100

8-6-25
GRANT C. LUCKENBILL-ENGINEER
MO# PE-2012018100

DATE PREPARED 8/5/2025

ROUTE	STATE
248	MO
DISTRICT	SHEET NO.
BR	7

COUNTY BARRY

JOB NO. JSR0119

CONTRACT ID.

PROJECT NO.

BRIDGE NO. A9432

DESCRIPTION	DATE

IF A SEAL IS PRESENT ON THIS SHEET IT HAS BEEN ELECTRONICALLY SEALED AND DATED.

MISSOURI HIGHWAYS AND TRANSPORTATION COMMISSION
105 WEST CAPITOL
JEFFERSON CITY, MO 65102
1-888-ASK-MODOT (1-888-275-6636)

olsson
550 ST. LOUIS STREET
SPRINGFIELD, MO 65806
PHONE: 417.890.8802
CERTIFICATE OF AUTHORITY NO. 001592

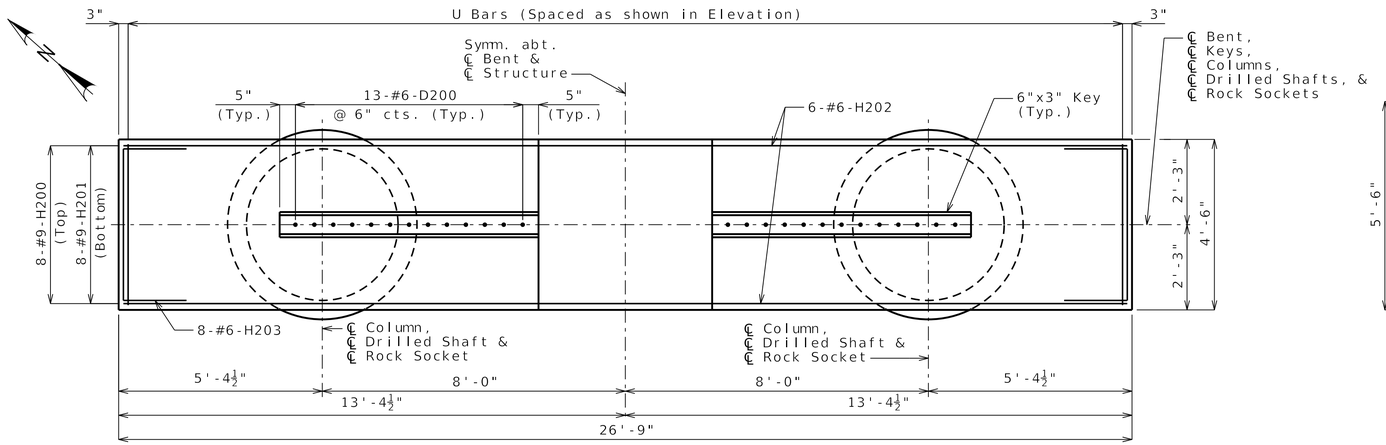

PLAN SHOWING REINFORCEMENT

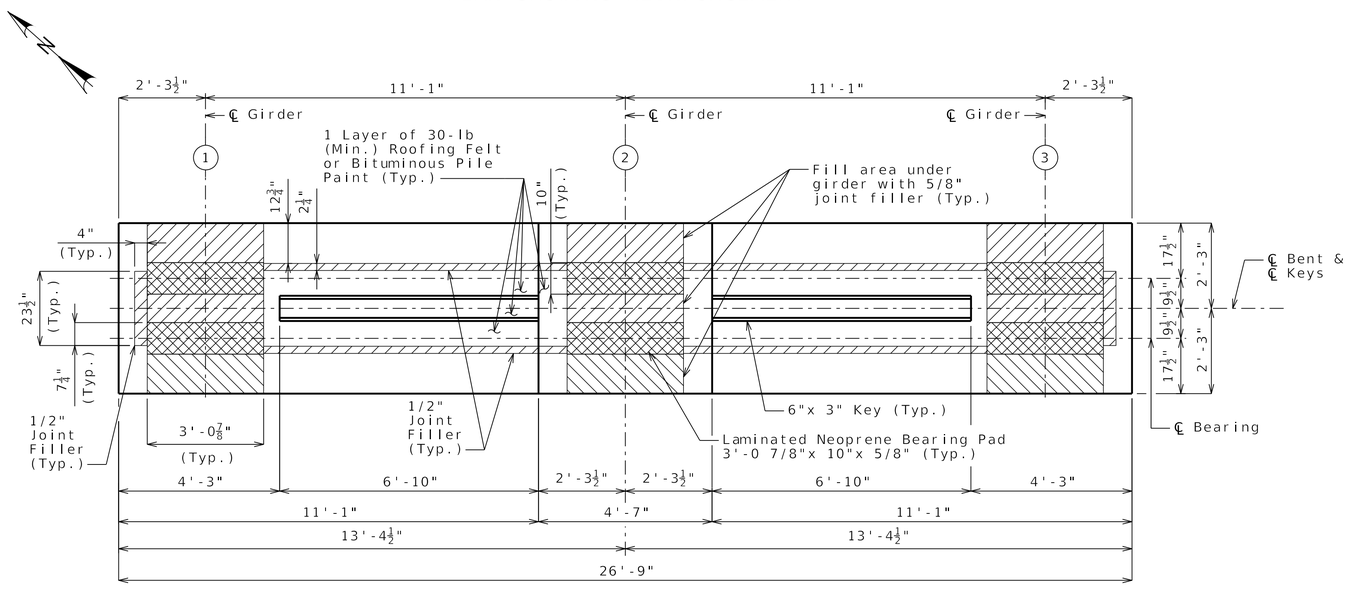

PLAN OF BEAM

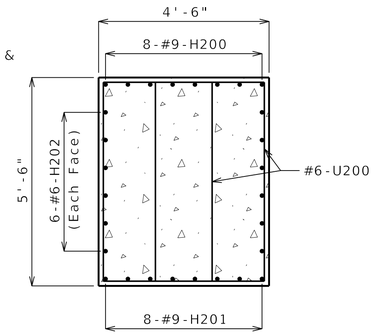

SECTION A-A

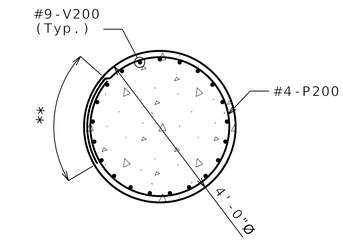

** Minimum lap 2'-5" (Stagger adjacent bar splices)

SECTION D-D

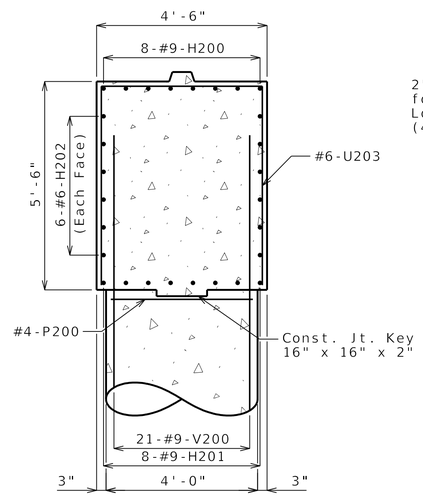

SECTION B-B

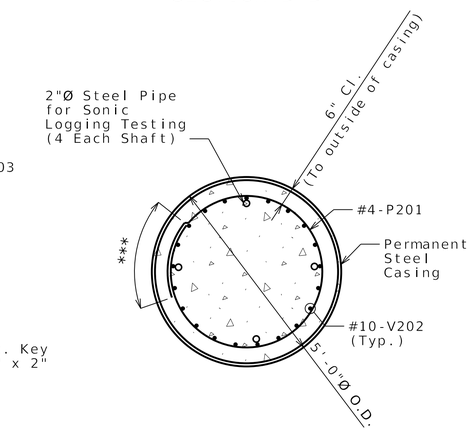

*** Minimum lap 2'-1" (Stagger adjacent bar splices)

SECTION E-E

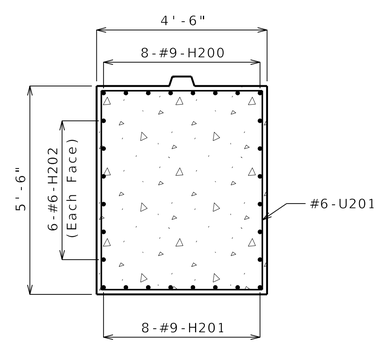

SECTION C-C

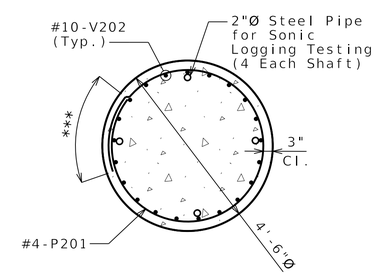

*** Minimum lap 2'-1" (Stagger adjacent bar splices)

SECTION F-F

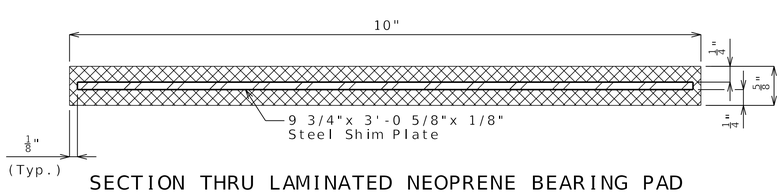

SECTION THRU LAMINATED NEOPRENE BEARING PAD

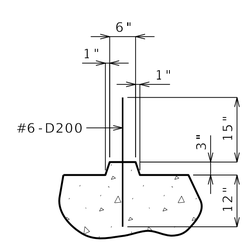

SECTION THRU KEY

Notes:

For steps 2 inches or more, use 2 1/4 x 1/2 inch joint filler up vertical face.

This sheet shall be used as a template for Bents No. 2, 3, and 4. Bar marks shown are applicable for Bent No. 2. The Bill of Reinforcing Steel will use separate bar marks for each bent. The first number in the bar mark will match the corresponding Bent No.

Work this sheet with Sheet No. 7.

DETAILS OF INTERMEDIATE BENTS NO. 2, 3, & 4

Detailed May 2024
Checked Aug. 2024

Note: This drawing is not to scale. Follow dimensions.

Digitally signed by Grant Luckenbill
Date: 2025.08.06 10:03:08-05'00'

GRANT C. LUCKENBILL
NUMBER
PE-2012018100

8-6-25
GRANT C. LUCKENBILL-ENGINEER
MO# PE-2012018100

DATE PREPARED	
8/5/2025	
ROUTE 248	STATE MO
DISTRICT BR	SHEET NO. 8
COUNTY BARRY	
JOB NO. JSR0119	
CONTRACT ID.	
PROJECT NO.	
BRIDGE NO. A9432	

DATE	DESCRIPTION

IF A SEAL IS PRESENT ON THIS SHEET IT HAS BEEN ELECTRONICALLY SEALED AND DATED.

MISSOURI HIGHWAYS AND TRANSPORTATION COMMISSION
105 WEST CAPITOL
JEFFERSON CITY, MO 65102
1-888-ASK-MODOT (1-888-275-6636)

olsson
550 ST. LOUIS STREET
SPRINGFIELD, MO 65806
PHONE: 417.890.8802
CERTIFICATE OF AUTHORITY NO. 001592

(1) Fabricator shall apply a bond breaker to this region excluding where joint filler will be applied.

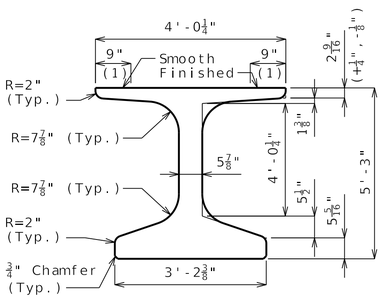

DIMENSIONS

(2) Outer strands tensioned to 2.02 kips/strand and inner strands to 8 kips/strand. Placed symmetrical about ℄ Girder. May be moved laterally in pairs.

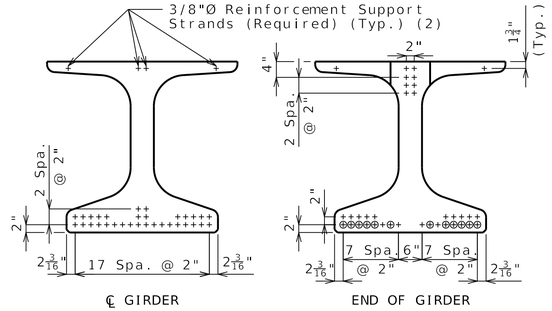

STRAND ARRANGEMENT

+ Indicates prestressing strand.

o Indicates cut & shop bend with 3'-0" projection.

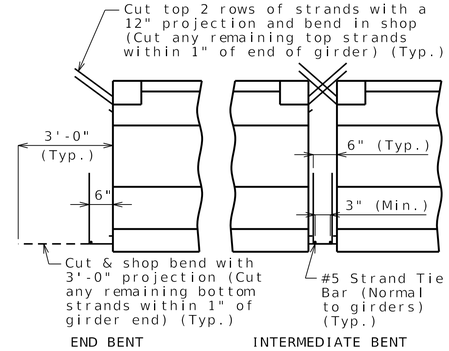

STRANDS AT GIRDER ENDS

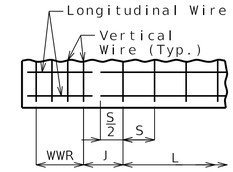

WELDED WIRE PLACEMENT

S = Vertical wire spacing

L = Length of WWR mats

J = Distance between WWR mats

Bill of Reinforcing Steel

Bars Each Girder

No.	Size/Mark		Length	Shape
136	3	G1	2'-10"	8
2	4	G3	3'-10"	20
2	4	G4	2'-3"	20
2	4	G5	2'-8"	20

Welded Wire Each Girder

Mark	Size	S	W	L	J
WWR1	D18	4"	W12	11'-4"	8"
WWR2	D18	8"	W12	11'-4"	11½"
WWR3	D18	12"	W12	63'-0"	--
WWR6	D31	2"	W12	16"	4"

Bending Diagrams

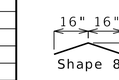

Shape 20

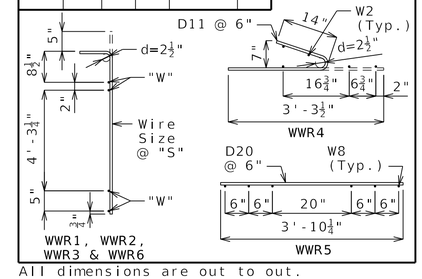

All dimensions are out to out.

Hooks and bends shall be in accordance with the CRSI Manual of Standard Practice for Detailing Reinforced Concrete Structures, Stirrup and Tie Dimensions.

Actual bar lengths are measured along centerline of bar to the nearest inch.

Minimum clearance to reinforcing shall be 1", unless otherwise shown.

All bar reinforcement shall be Grade 60.

WWR shall not be epoxy coated.

G4 and G5 not required for interior girders. G3 not required for exterior girders of intermediate spans. Half no. of G3, G4 and G5 not required for ext. girders of end spans.

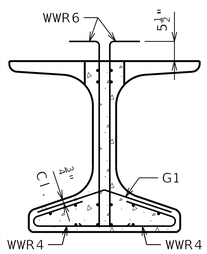

SECTION A-A

Strands not shown for clarity.

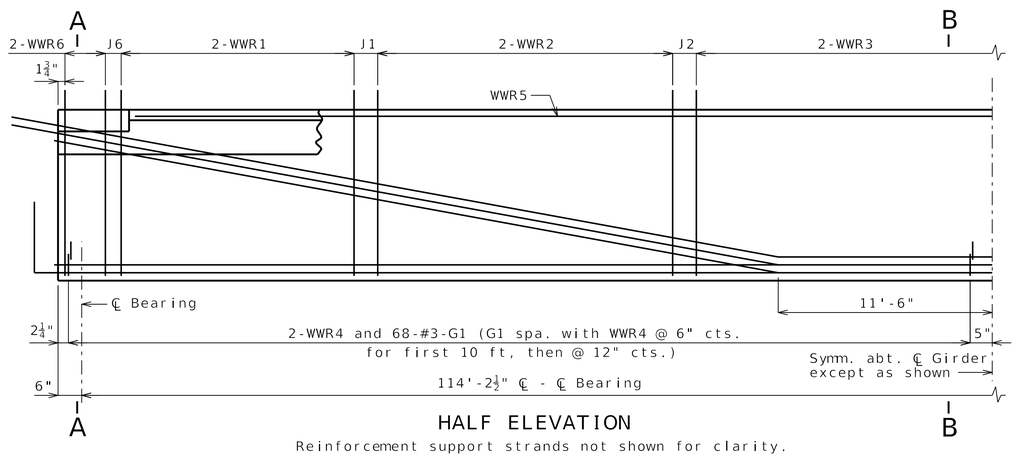

HALF ELEVATION

Reinforcement support strands not shown for clarity.

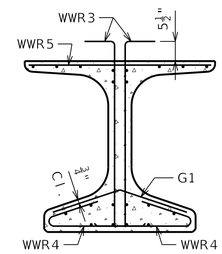

SECTION B-B

Strands not shown for clarity.

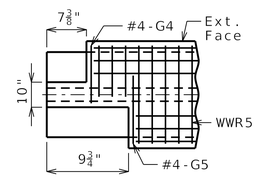

LEFT EXTERIOR GIRDER AT INTERMEDIATE BENT

Rotate 180° for right ext.

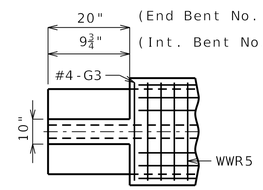

INTERIOR GIRDER AT ALL BENTS & EXTERIOR GIRDER AT END BENT

TOP FLANGE BLOCKOUT

General Notes:

Concrete for prestressed beams shall be Class A-1 with f'c = 8000 psi and f'ci = 6500 psi.

Use 32 strands, 0.6"Ø Grade 270, with an initial prestress force of 1406 kips.

Pretensioned members shall be in accordance with Sec 1029.

Fabricator shall be responsible for location and design of lifting devices.

Exterior and interior girders are the same except: coil ties, top flange blockout and coil inserts for slab drains.

For Girder Camber Diagram, see Sheet No. 20.

The 1 1/2"Ø holes shall be cast in the web for steel intermediate diaphragms. Drilling is not allowed. For location of holes and details of steel intermediate diaphragms, see Sheet No. 17.

For location of coil inserts at slab drains, see Sheet No. 19.

For location of coil ties at concrete diaphragms and integral bents, see Sheets No. 4 and 18.

Alternate bar reinforcing steel details are provided and may be used. The same type of reinforcing steel shall be used for all girders in all spans.

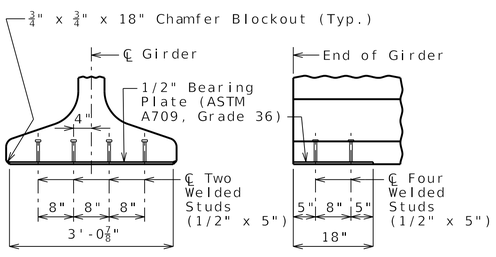

END VIEW

SIDE VIEW

BEARING PLATE

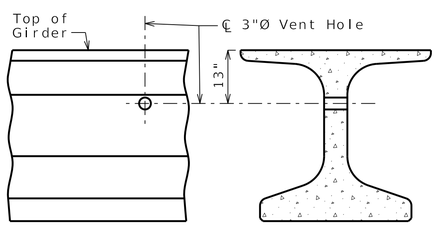

PART ELEVATION

PART SECTION

VENT HOLE

Place vent holes at or near upgrade 1/3 point of girders and clear reinforcing steel or strands by 1 1/2" minimum and steel intermediate diaphragm bolt connections by 6" minimum.

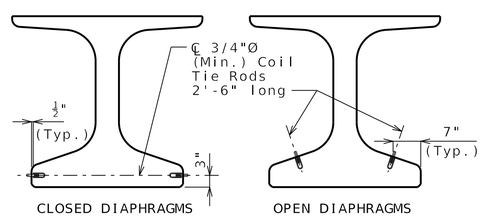

CLOSED DIAPHRAGMS AND INTEGRAL BENTS

OPEN DIAPHRAGMS

COIL TIES

Exclude coil tie at exterior face of exterior girders except at integral end bents.

NU-GIRDERS - SPAN (1-2)

Detailed May 2024
Checked Aug. 2024

Note: This drawing is not to scale. Follow dimensions.

Digitally signed by Grant Luckenbill
Date: 2025.08.06 10:03:34-05'00'
GRANT C. LUCKENBILL NUMBER PE-2012018100
8-6-25
GRANT C. LUCKENBILL–ENGINEER
MO# PE-2012018100

DATE PREPARED 8/5/2025
ROUTE 248 | STATE MO
DISTRICT BR | SHEET NO. 9
COUNTY BARRY
JOB NO. JSR0119
CONTRACT ID.
PROJECT NO.
BRIDGE NO. A9432

DESCRIPTION
DATE

MISSOURI HIGHWAYS AND TRANSPORTATION COMMISSION
105 WEST CAPITOL
JEFFERSON CITY, MO 65102
1-888-ASK-MODOT (1-888-275-6636)

olsson
550 ST. LOUIS STREET
SPRINGFIELD, MO 65806
PHONE: 417.890.8802
CERTIFICATE OF AUTHORITY NO. 001592

IF A SEAL IS PRESENT ON THIS SHEET IT HAS BEEN ELECTRONICALLY SEALED AND DATED.

(1) Fabricator shall apply a bond breaker to this region excluding where joint filler will be applied.

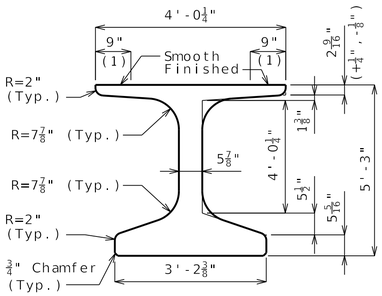

DIMENSIONS

(2) Outer strands tensioned to 2.02 kips/strand and inner strands to 8 kips/strand. Placed symmetrical about ℄ Girder. May be moved laterally in pairs.

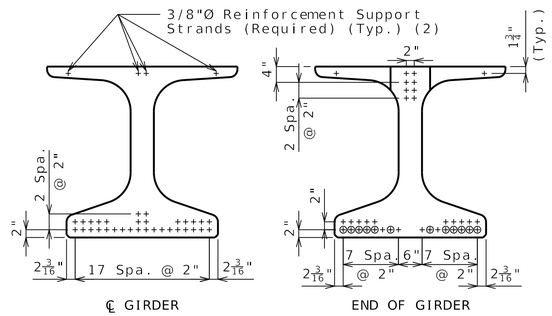

STRAND ARRANGEMENT

+ Indicates prestressing strand.

o Indicates cut & shop bend with 3'-0" projection.

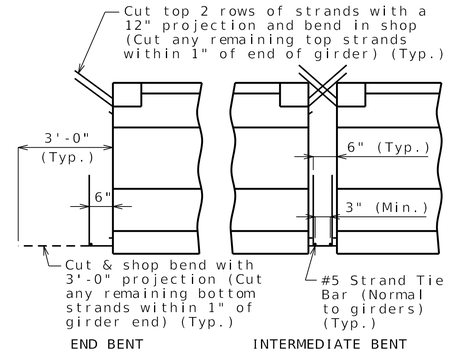

STRANDS AT GIRDER ENDS

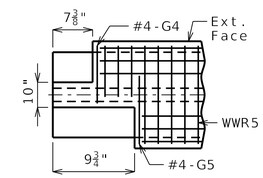

LEFT EXTERIOR GIRDER AT INTERMEDIATE BENT
Rotate 180° for right ext.

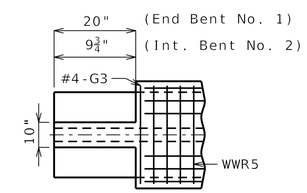

INTERIOR GIRDER AT ALL BENTS & EXTERIOR GIRDER AT END BENT

TOP FLANGE BLOCKOUT

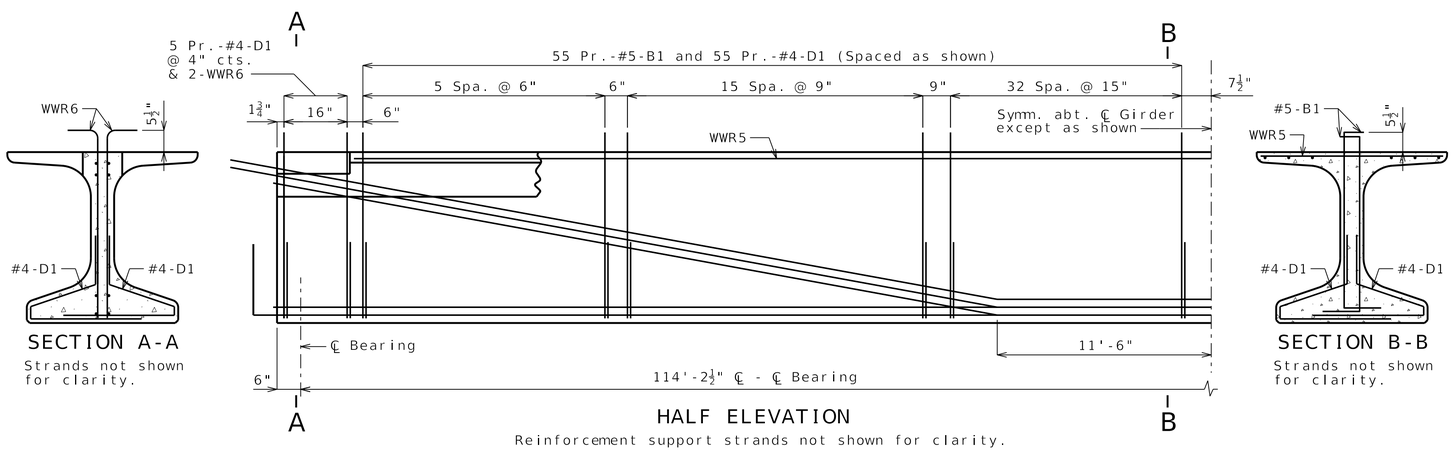

SECTION A-A
Strands not shown for clarity.

HALF ELEVATION
Reinforcement support strands not shown for clarity.

SECTION B-B
Strands not shown for clarity.

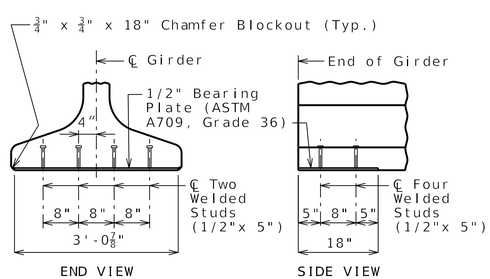

END VIEW

SIDE VIEW

BEARING PLATE

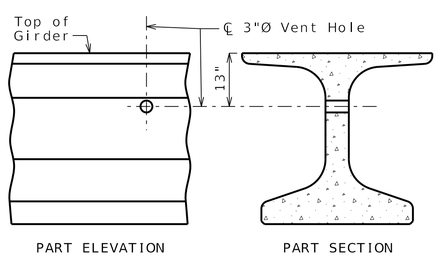

PART ELEVATION

PART SECTION

VENT HOLE

Place vent holes at or near upgrade 1/3 point of girders and clear reinforcing steel or strands by 1 1/2" minimum and steel intermediate diaphragm bolt connections by 6" minimum.

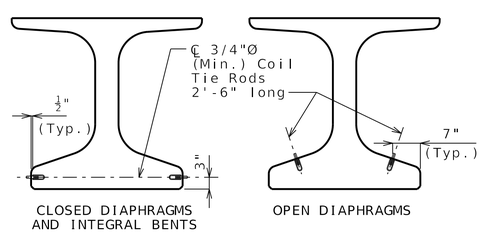

CLOSED DIAPHRAGMS AND INTEGRAL BENTS

OPEN DIAPHRAGMS

COIL TIES

Exclude coil tie at exterior face of exterior girders except at integral end bents.

Bill of Reinforcing Steel - Each Girder			
No.	Size/ Mark	Length	Shape
220	5 B1	6'-8"	11
240	4 D1	4'-0"	9
2	4 G3	3'-10"	20
2	4 G4	2'-3"	20
2	4 G5	2'-8"	20

Bending Diagrams

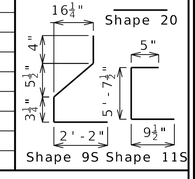

Welded Wire Reinforcement - Each Girder

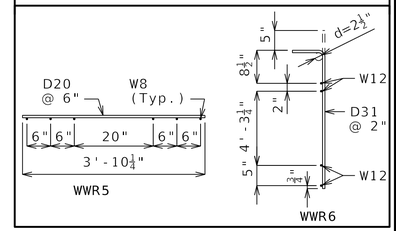

All dimensions are out to out.

Hooks and bends shall be in accordance with the CRSI Manual of Standard Practice for Detailing Reinforced Concrete Structures, Stirrup and Tie Dimensions.

Actual bar lengths are measured along centerline of bar to the nearest inch.

Minimum clearance to reinforcing shall be 1".

All bar reinforcement shall be Grade 60.

The two D1 bars may be furnished as one bar at the fabricator's option.

All B1 bars shall be epoxy coated.

G4 and G5 not required for interior girders. G3 not required for exterior girders of intermediate spans. Half no. of G3, G4 and G5 not required for ext. girders of end spans.

General Notes:

Concrete for prestressed girders shall be Class A-1 with f'c = 8000 psi and f'ci = 6500 psi.

Use 32 strands, 0.6"Ø Grade 270, with an initial prestress force of 1406 kips.

Pretensioned members shall be in accordance with Sec 1029.

Fabricator shall be responsible for location and design of lifting devices.

Exterior and interior girders are the same except: coil ties, top flange blockout and coil inserts for slab drains.

For Girder Camber Diagram, see Sheet No. 20.

The 1 1/2"Ø holes shall be cast in the web for steel intermediate diaphragms. Drilling is not allowed. For location of holes and details of steel intermediate diaphragms, see Sheet No.17.

For location of coil inserts at slab drains, see Sheet No. 19.

For location of coil ties at concrete diaphragms and integral bents, see Sheets No. 4 and 18.

Alternate bar reinforcing steel details are provided and may be used. The same type of reinforcing steel shall be used for all girders in all spans.

Digitally signed by Grant Luckenbill
Date: 2025.08.06 10:04:00-05'00'

GRANT C. LUCKENBILL NUMBER PE-2012018100
8-6-25
GRANT C. LUCKENBILL-ENGINEER
MO# PE-2012018100

DATE PREPARED 8/5/2025

ROUTE	STATE
248	MO
DISTRICT	SHEET NO.
BR	10

COUNTY: BARRY

JOB NO.: JSR0119

CONTRACT ID.:

PROJECT NO.:

BRIDGE NO.: A9432

DESCRIPTION	DATE

IF A SEAL IS PRESENT ON THIS SHEET IT HAS BEEN ELECTRONICALLY SEALED AND DATED.

MISSOURI HIGHWAYS AND TRANSPORTATION COMMISSION
105 WEST CAPITOL
JEFFERSON CITY, MO 65102
1-888-ASK-MODOT (1-888-275-6636)

olsson
550 ST. LOUIS STREET
SPRINGFIELD, MO 65806
PHONE: 417.890.8802
CERTIFICATE OF AUTHORITY NO. 001592

NU-GIRDERS (ALTERNATE REINFORCEMENT) - SPAN (1-2)

Detailed May 2024
Checked Aug. 2024

Note: This drawing is not to scale. Follow dimensions.

(1) Fabricator shall apply a bond breaker to this region excluding where joint filler will be applied.

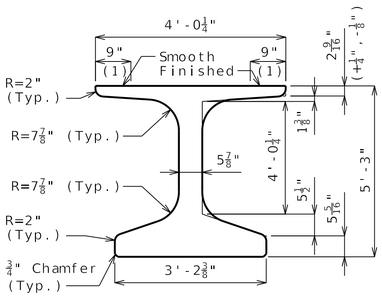

DIMENSIONS

(2) Outer strands tensioned to 2.02 kips/strand and inner strands to 8 kips/strand. Placed symmetrical about ℄ Girder. May be moved laterally in pairs.

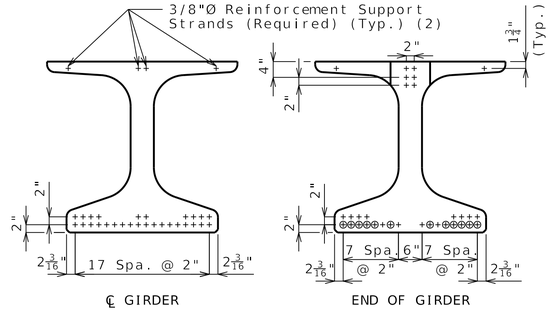

STRAND ARRANGEMENT

+ Indicates prestressing strand.

o Indicates cut & shop bend with 3'-0" projection.

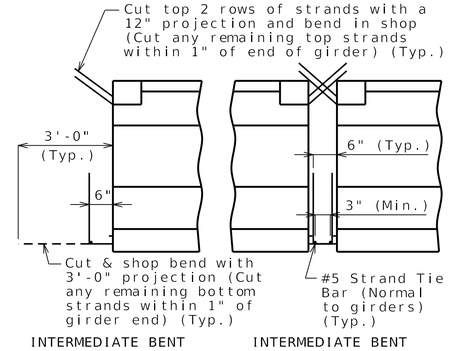

STRANDS AT GIRDER ENDS

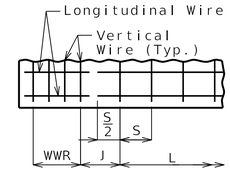

WELDED WIRE PLACEMENT

S = Vertical wire spacing

L = Length of WWR mats

J = Distance between WWR mats

Bill of Reinforcing Steel

Bars Each Girder

No.	Size/Mark		Length	Shape
136	3	G1	2'-10"	8
2	4	G3	3'-10"	20
2	4	G4	2'-3"	20
2	4	G5	2'-8"	20

Welded Wire Each Girder

Mark	Size	S	W	L	J
WWR1	D18	4"	W12	8'-4"	8"
WWR2	D18	8"	W12	14'-0"	10¾"
WWR3	D18	12"	W12	63'-0"	--
WWR6	D31	2"	W12	16"	4"

Bending Diagrams

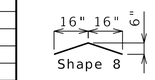

Shape 20

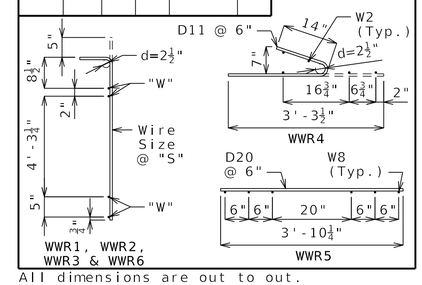

All dimensions are out to out.

Hooks and bends shall be in accordance with the CRSI Manual of Standard Practice for Detailing Reinforced Concrete Structures, Stirrup and Tie Dimensions.

Actual bar lengths are measured along centerline of bar to the nearest inch.

Minimum clearance to reinforcing shall be 1", unless otherwise shown.

All bar reinforcement shall be Grade 60.

WWR shall not be epoxy coated.

G4 and G5 not required for interior girders. G3 not required for exterior girders of intermediate spans. Half no. of G3, G4 and G5 not required for ext. girders of end spans.

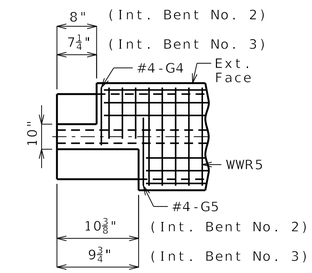

LEFT EXTERIOR GIRDER AT INTERMEDIATE BENT
Rotate 180° for right ext.

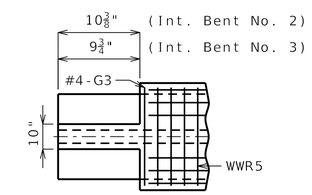

INTERIOR GIRDER AT ALL BENTS
TOP FLANGE BLOCKOUT

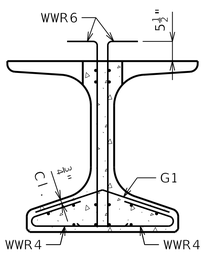

SECTION A-A

Strands not shown for clarity.

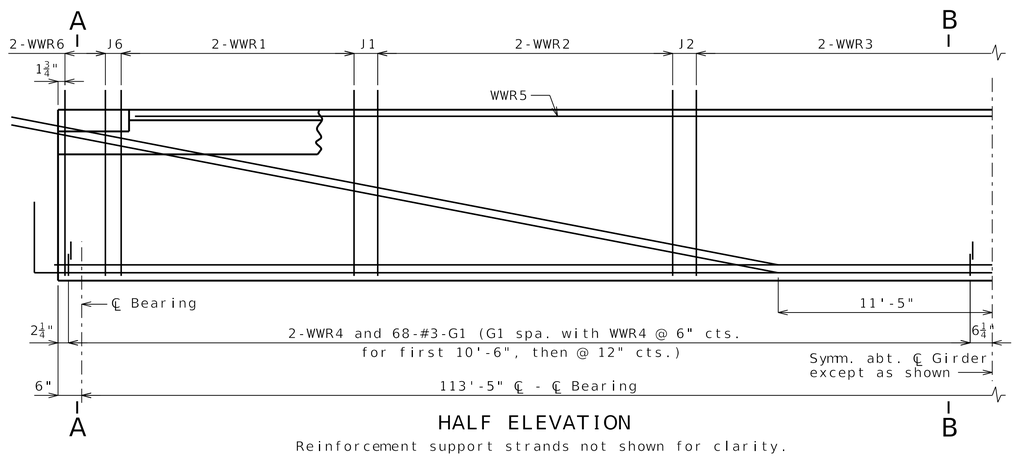

HALF ELEVATION

Reinforcement support strands not shown for clarity.

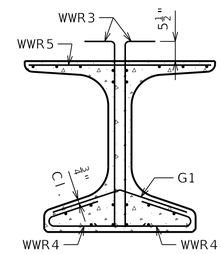

SECTION B-B

Strands not shown for clarity.

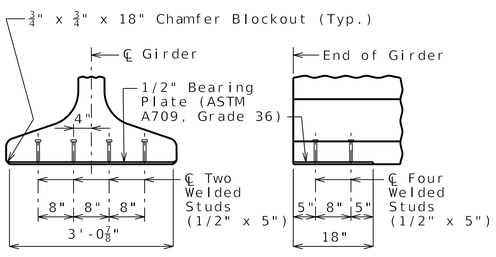

END VIEW SIDE VIEW

BEARING PLATE

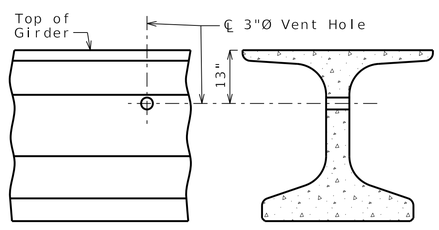

PART ELEVATION PART SECTION

VENT HOLE

Place vent holes at or near upgrade 1/3 point of girders and clear reinforcing steel or strands by 1 1/2" minimum and steel intermediate diaphragm bolt connections by 6" minimum.

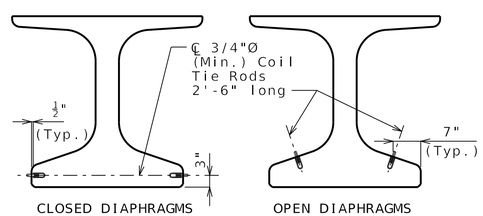

CLOSED DIAPHRAGMS AND INTEGRAL BENTS OPEN DIAPHRAGMS

COIL TIES

Exclude coil tie at exterior face of exterior girders except at integral end bents.

General Notes:

Concrete for prestressed beams shall be Class A-1 with f'c = 8000 psi and f'ci = 6500 psi.

Use 28 strands, 0.6"Ø Grade 270, with an initial prestress force of 1230 kips.

Pretensioned members shall be in accordance with Sec 1029.

Fabricator shall be responsible for location and design of lifting devices.

Exterior and interior girders are the same except: coil ties, top flange blockout and coil inserts for slab drains.

For Girder Camber Diagram, see Sheet No. 20.

The 1 1/2"Ø holes shall be cast in the web for steel intermediate diaphragms. Drilling is not allowed. For location of holes and details of steel intermediate diaphragms, see Sheet No. 17.

For location of coil inserts at slab drains, see Sheet No. 19.

For location of coil ties at concrete diaphragms and integral bents, see Sheets No. 4 and 18.

Alternate bar reinforcing steel details are provided and may be used. The same type of reinforcing steel shall be used for all girders in all spans.

NU-GIRDERS - SPAN (2-3)

Detailed May 2024
Checked Aug. 2024

Note: This drawing is not to scale. Follow dimensions.

Digitally signed by Grant Luckenbill
Date: 2025.08.06 10:06:27-05'00'

GRANT C. LUCKENBILL NUMBER PE-2012018100

8-6-25
GRANT C. LUCKENBILL-ENGINEER
MO# PE-2012018100

DATE PREPARED	
8/5/2025	
ROUTE 248	STATE MO
DISTRICT BR	SHEET NO. 11
COUNTY BARRY	
JOB NO. JSR0119	
CONTRACT ID.	
PROJECT NO.	
BRIDGE NO. A9432	

DESCRIPTION

DATE

IF A SEAL IS PRESENT ON THIS SHEET IT HAS BEEN ELECTRONICALLY SEALED AND DATED.

MISSOURI HIGHWAYS AND TRANSPORTATION COMMISSION
105 WEST CAPITOL
JEFFERSON CITY, MO 65102
1-888-ASK-MODOT (1-888-275-6636)

olsson
550 ST. LOUIS STREET
SPRINGFIELD, MO 65806
PHONE: 417.890.8802
CERTIFICATE OF AUTHORITY NO. 001592

(1) Fabricator shall apply a bond breaker to this region excluding where joint filler will be applied.

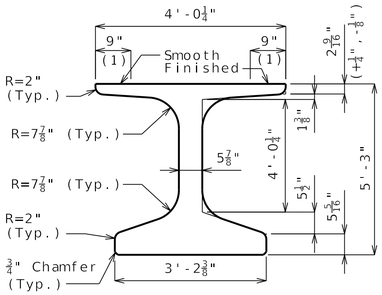

DIMENSIONS

(2) Outer strands tensioned to 2.02 kips/strand and inner strands to 8 kips/strand. Placed symmetrical about ℄ Girder. May be moved laterally in pairs.

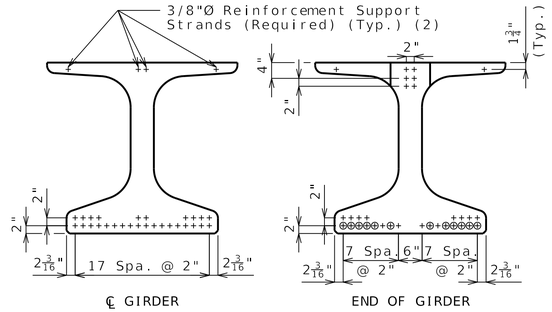

STRAND ARRANGEMENT

+ Indicates prestressing strand.

o Indicates cut & shop bend with 3'-0" projection.

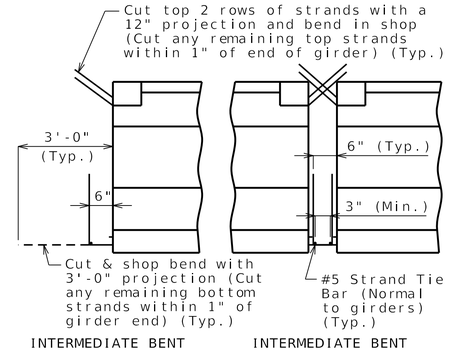

STRANDS AT GIRDER ENDS

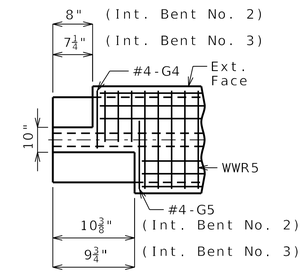

LEFT EXTERIOR GIRDER AT INTERMEDIATE BENT
Rotate 180° for right ext.

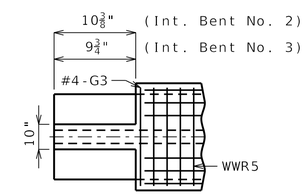

INTERIOR GIRDER AT ALL BENTS
TOP FLANGE BLOCKOUT

Bill of Reinforcing Steel - Each Girder			
No.	Size/ Mark	Length	Shape
268	4 B1	6'-8"	11S
288	4 D1	4'-0"	9S
2	4 G3	3'-10"	20
2	4 G4	2'-3"	20
2	4 G5	2'-8"	20

Bending Diagrams

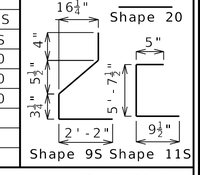

Welded Wire Reinforcement - Each Girder

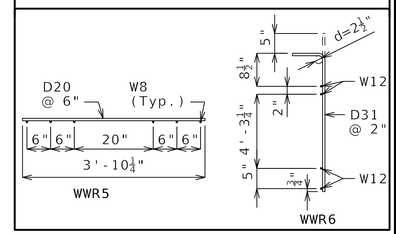

All dimensions are out to out.

Hooks and bends shall be in accordance with the CRSI Manual of Standard Practice for Detailing Reinforced Concrete Structures, Stirrup and Tie Dimensions.

Actual bar lengths are measured along centerline of bar to the nearest inch.

Minimum clearance to reinforcing shall be 1".

All bar reinforcement shall be Grade 60.

The two D1 bars may be furnished as one bar at the fabricator's option.

All B1 bars shall be epoxy coated.

G4 and G5 not required for interior girders. G3 not required for exterior girders of intermediate spans. Half no. of G3, G4 and G5 not required for ext. girders of end spans.

General Notes:

Concrete for prestressed girders shall be Class A-1 with f'c = 8000 psi and f'ci = 6500 psi.

Use 28 strands, 0.6"Ø Grade 270, with an initial prestress force of 1230 kips.

Pretensioned members shall be in accordance with Sec 1029.

Fabricator shall be responsible for location and design of lifting devices.

Exterior and interior girders are the same except; coil ties, top flange blockout and coil inserts for slab drains.

For Girder Camber Diagram, see Sheet No. 20.

The 1 1/2"Ø holes shall be cast in the web for steel intermediate diaphragms. Drilling is not allowed. For location of holes and details of steel intermediate diaphragms, see Sheet No. 17.

For location of coil inserts at slab drains, see Sheet No. 19.

For location of coil ties at concrete diaphragms and integral bents, see Sheets No. 4 and 18.

Alternate bar reinforcing steel details are provided and may be used. The same type of reinforcing steel shall be used for all girders in all spans.

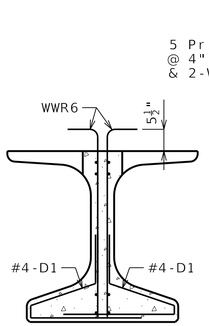

SECTION A-A
Strands not shown for clarity.

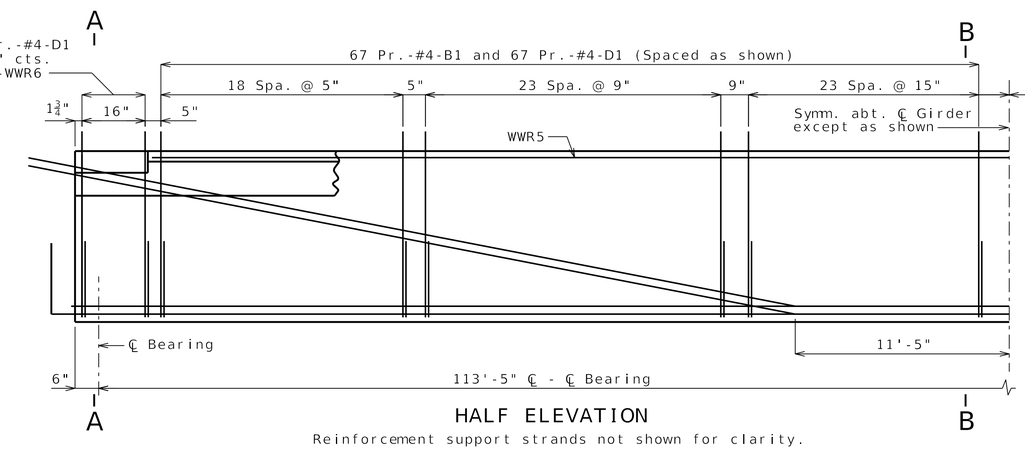

HALF ELEVATION
Reinforcement support strands not shown for clarity.

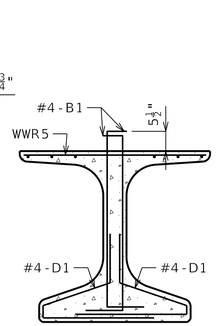

SECTION B-B
Strands not shown for clarity.

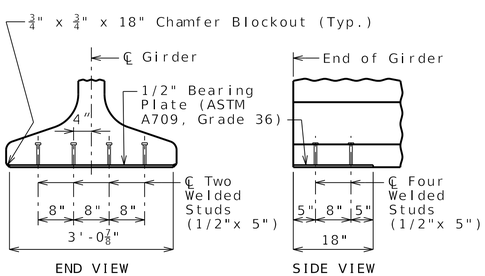

END VIEW
SIDE VIEW

BEARING PLATE

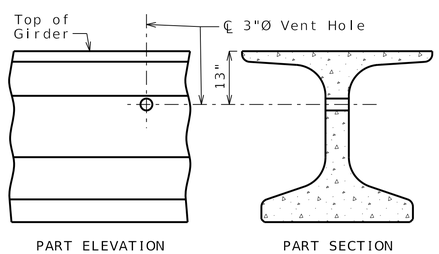

PART ELEVATION
PART SECTION

VENT HOLE

Place vent holes at or near upgrade 1/3 point of girders and clear reinforcing steel or strands by 1 1/2" minimum and steel intermediate diaphragm bolt connections by 6" minimum.

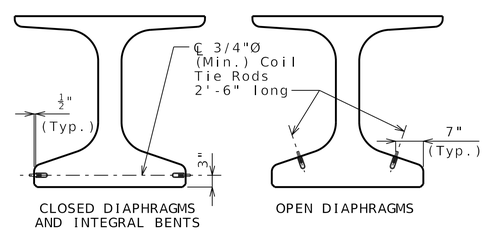

CLOSED DIAPHRAGMS AND INTEGRAL BENTS
OPEN DIAPHRAGMS

COIL TIES

Exclude coil tie at exterior face of exterior girders except at integral end bents.

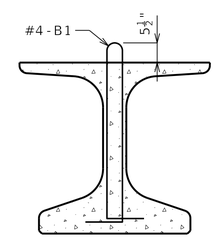

B1 BAR PERMISSIBLE ALTERNATE SHAPE

NU-GIRDERS (ALTERNATE REINFORCEMENT) - SPAN (2-3)

Detailed May 2024
Checked Aug. 2024

Note: This drawing is not to scale. Follow dimensions.

F:\2023\04001-04500\023-04082\40-Design\Microstation\JSR0119\023-04082_JSR0119\plan_sheets\16 Bridge Sheets\B_A9432_012_JSR0119_ALT GIRDER SPAN 2-3.DGN 8:21:55 AM 8/5/2025

Digitally signed by Grant Luckenbill
Date: 2025.08.06 10:05:05-05'00'
GRANT C. LUCKENBILL NUMBER PE-2012018100
8-6-25
GRANT C. LUCKENBILL-ENGINEER
MO# PE-2012018100

DATE PREPARED 8/5/2025
ROUTE 248 | STATE MO
DISTRICT BR | SHEET NO. 12
COUNTY BARRY
JOB NO. JSR0119
CONTRACT ID.
PROJECT NO.
BRIDGE NO. A9432

DESCRIPTION
DATE

MISSOURI HIGHWAYS AND TRANSPORTATION COMMISSION
105 WEST CAPITOL
JEFFERSON CITY, MO 65102
1-888-ASK-MODOT (1-888-275-6636)

olsson
550 ST. LOUIS STREET
SPRINGFIELD, MO 65806
PHONE: 417.890.8802
CERTIFICATE OF AUTHORITY NO. 001592

IF A SEAL IS PRESENT ON THIS SHEET IT HAS BEEN ELECTRONICALLY SEALED AND DATED.

(1) Fabricator shall apply a bond breaker to this region excluding where joint filler will be applied.

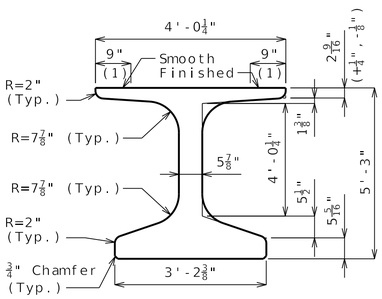

DIMENSIONS

(2) Outer strands tensioned to 2.02 kips/strand and inner strands to 8 kips/strand. Placed symmetrical about ℄ Girder. May be moved laterally in pairs.

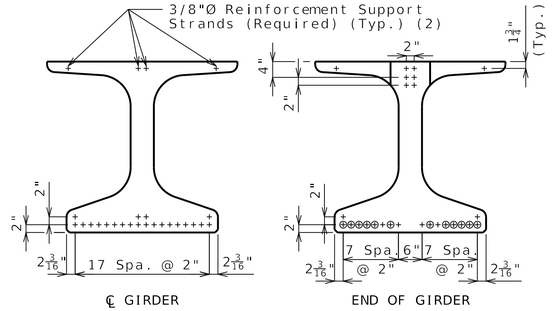

STRAND ARRANGEMENT

+ Indicates prestressing strand.

○ Indicates cut & shop bend with 3'-0" projection.

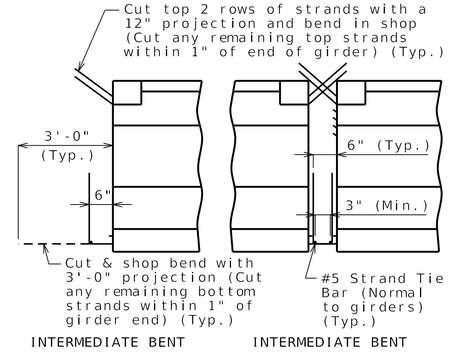

STRANDS AT GIRDER ENDS

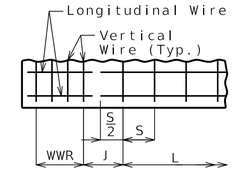

WELDED WIRE PLACEMENT

S = Vertical wire spacing

L = Length of WWR mats

J = Distance between WWR mats

Bill of Reinforcing Steel

Bars Each Girder

No.	Size/Mark		Length	Shape
100	3	G1	2'-10"	8
2	4	G3	3'-10"	20
2	4	G4	2'-3"	20
2	4	G5	2'-8"	20

Welded Wire Each Girder

Mark	Size	S	W	L	J
WWR1	D18	4"	W12	3'-8"	8"
WWR2	D18	8"	W12	6'-8"	10¾"
WWR3	D18	12"	W12	52'-0"	--
WWR6	D31	2"	W12	16"	4"

Bending Diagrams

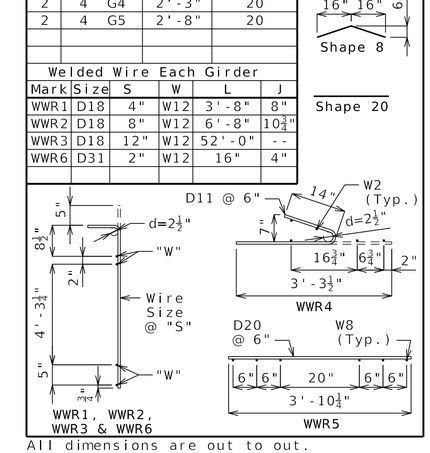

All dimensions are out to out.

Hooks and bends shall be in accordance with the CRSI Manual of Standard Practice for Detailing Reinforced Concrete Structures, Stirrup and Tie Dimensions.

Actual bar lengths are measured along centerline of bar to the nearest inch.

Minimum clearance to reinforcing shall be 1", unless otherwise shown.

All bar reinforcement shall be Grade 60.

WWR shall not be epoxy coated.

G4 and G5 not required for interior girders. G3 not required for exterior girders of intermediate spans. Half no. of G3, G4 and G5 not required for ext. girders of end spans.

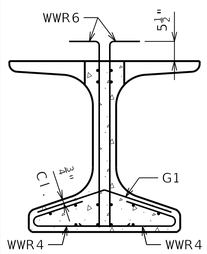

SECTION A-A

Strands not shown for clarity.

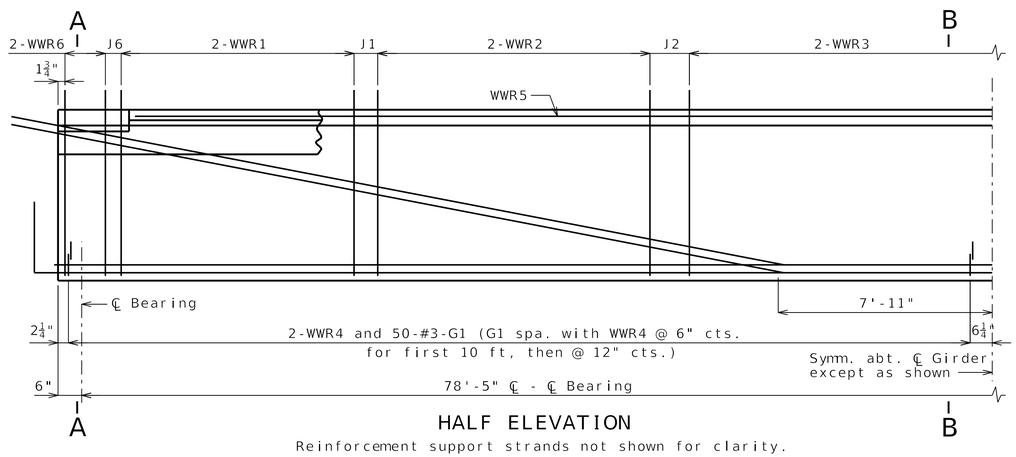

HALF ELEVATION

Reinforcement support strands not shown for clarity.

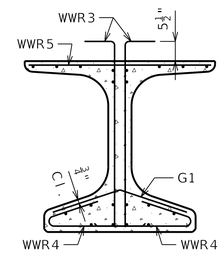

SECTION B-B

Strands not shown for clarity.

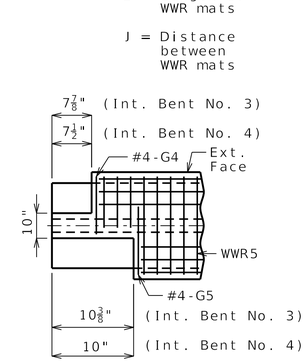

LEFT EXTERIOR GIRDER AT INTERMEDIATE BENT

Rotate 180° for right ext.

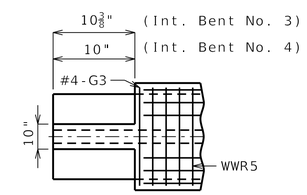

INTERIOR GIRDER AT ALL BENTS

TOP FLANGE BLOCKOUT

General Notes:

Concrete for prestressed beams shall be Class A-1 with f'c = 8000 psi and f'ci = 6500 psi.

Use 22 strands, 0.6"Ø Grade 270, with an initial prestress force of 967 kips.

Pretensioned members shall be in accordance with Sec 1029.

Fabricator shall be responsible for location and design of lifting devices.

Exterior and interior girders are the same except: coil ties, top flange blockout and coil inserts for slab drains.

For Girder Camber Diagram, see Sheet No. 20.

The 1 1/2"Ø holes shall be cast in the web for steel intermediate diaphragms. Drilling is not allowed. For location of holes and details of steel intermediate diaphragms, see Sheet No. 17.

For location of coil inserts at slab drains, see Sheet No. 19.

For location of coil ties at concrete diaphragms and integral bents, see Sheets No. 4 and 18.

Alternate bar reinforcing steel details are provided and may be used. The same type of reinforcing steel shall be used for all girders in all spans.

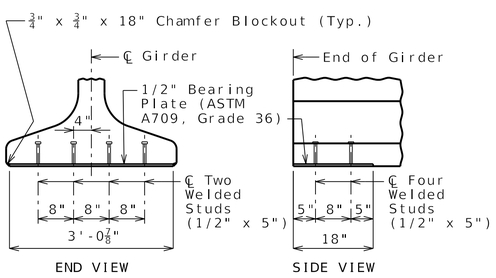

BEARING PLATE

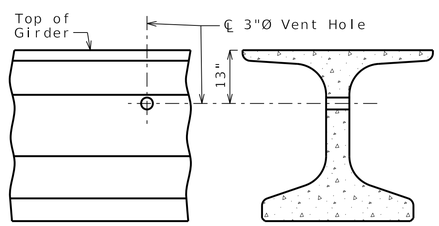

VENT HOLE

Place vent holes at or near upgrade 1/3 point of girders and clear reinforcing steel or strands by 1 1/2" minimum and steel intermediate diaphragm bolt connections by 6" minimum.

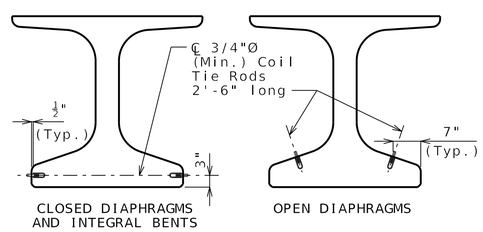

COIL TIES

Exclude coil tie at exterior face of exterior girders except at integral end bents.

NU-GIRDERS - SPAN (3-4)

Detailed May 2024
Checked Aug. 2024

Note: This drawing is not to scale. Follow dimensions.

Digitally signed by Grant Luckenbill
Date: 2025.08.06 10:05:24-05'00'
GRANT C. LUCKENBILL NUMBER PE-2012018100
8-6-25
GRANT C. LUCKENBILL–ENGINEER
MO# PE-2012018100

DATE PREPARED 8/5/2025

ROUTE	STATE
248	MO
DISTRICT	SHEET NO.
BR	13

COUNTY: BARRY

JOB NO.: JSR0119

CONTRACT ID.

PROJECT NO.

BRIDGE NO.: A9432

DATE	DESCRIPTION

MISSOURI HIGHWAYS AND TRANSPORTATION COMMISSION
105 WEST CAPITOL
JEFFERSON CITY, MO 65102
1-888-ASK-MODOT (1-888-275-6636)

olsson
550 ST. LOUIS STREET
SPRINGFIELD, MO 65806
PHONE: 417.890.8802
CERTIFICATE OF AUTHORITY NO. 001592

IF A SEAL IS PRESENT ON THIS SHEET IT HAS BEEN ELECTRONICALLY SEALED AND DATED.

(1) Fabricator shall apply a bond breaker to this region excluding where joint filler will be applied.

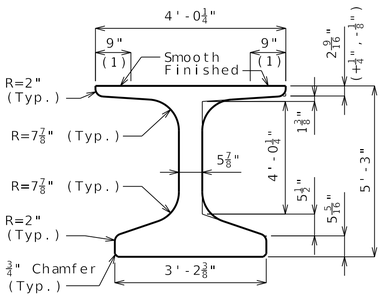

DIMENSIONS

(2) Outer strands tensioned to 2.02 kips/strand and inner strands to 8 kips/strand. Placed symmetrical about ℄ Girder. May be moved laterally in pairs.

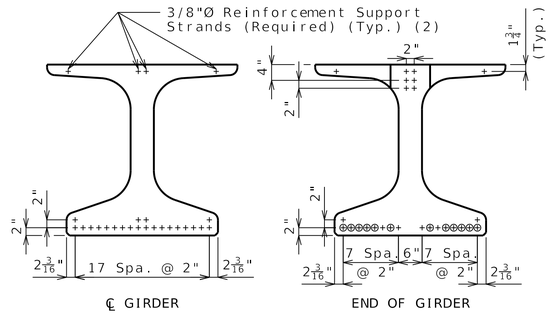

STRAND ARRANGEMENT

+ Indicates prestressing strand.

o Indicates cut & shop bend with 3'-0" projection.

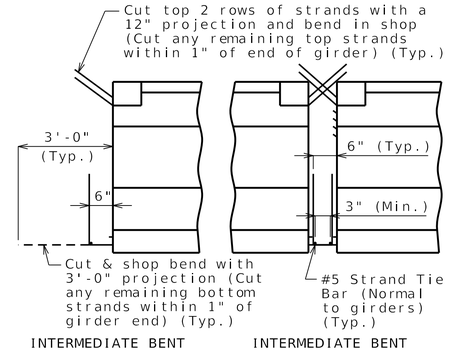

STRANDS AT GIRDER ENDS

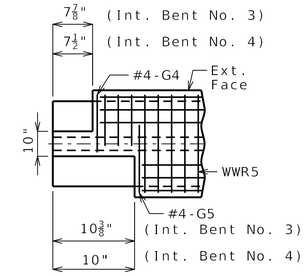

LEFT EXTERIOR GIRDER AT INTERMEDIATE BENT
Rotate 180° for right ext.

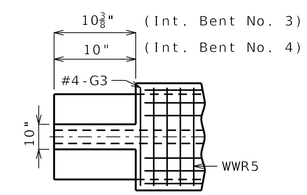

INTERIOR GIRDER AT ALL BENTS

TOP FLANGE BLOCKOUT

Bill of Reinforcing Steel - Each Girder			
No.	Size/ Mark	Length	Shape
160	4 B1	6'-8"	11S
180	4 D1	4'-0"	9S
2	4 G3	3'-10"	20
2	4 G4	2'-3"	20
2	4 G5	2'-8"	20

Bending Diagrams

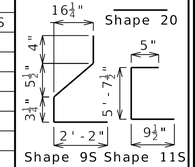

Welded Wire Reinforcement - Each Girder

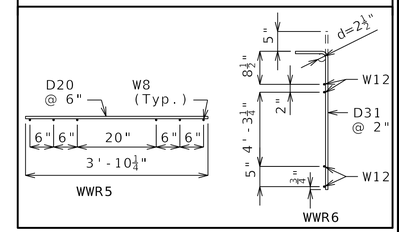

All dimensions are out to out.

Hooks and bends shall be in accordance with the CRSI Manual of Standard Practice for Detailing Reinforced Concrete Structures, Stirrup and Tie Dimensions.

Actual bar lengths are measured along centerline of bar to the nearest inch.

Minimum clearance to reinforcing shall be 1".

All bar reinforcement shall be Grade 60.

The two D1 bars may be furnished as one bar at the fabricator's option.

All B1 bars shall be epoxy coated.

G4 and G5 not required for interior girders. G3 not required for exterior girders of intermediate spans. Half no. of G3, G4 and G5 not required for ext. girders of end spans.

General Notes:

Concrete for prestressed girders shall be Class A-1 with f'c = 8000 psi and f'ci = 6500 psi.

Use 22 strands, 0.6"Ø Grade 270, with an initial prestress force of 967 kips.

Pretensioned members shall be in accordance with Sec 1029.

Fabricator shall be responsible for location and design of lifting devices.

Exterior and interior girders are the same except: coil ties, top flange blockout and coil inserts for slab drains.

For Girder Camber Diagram, see Sheet No. 20.

The 1 1/2"Ø holes shall be cast in the web for steel intermediate diaphragms. Drilling is not allowed. For location of holes and details of steel intermediate diaphragms, see Sheet No. 17.

For location of coil inserts at slab drains, see Sheet No. 19.

For location of coil ties at concrete diaphragms and integral bents, see Sheets No. 4 and 18.

Alternate bar reinforcing steel details are provided and may be used. The same type of reinforcing steel shall be used for all girders in all spans.

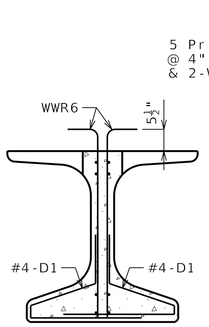

SECTION A-A

Strands not shown for clarity.

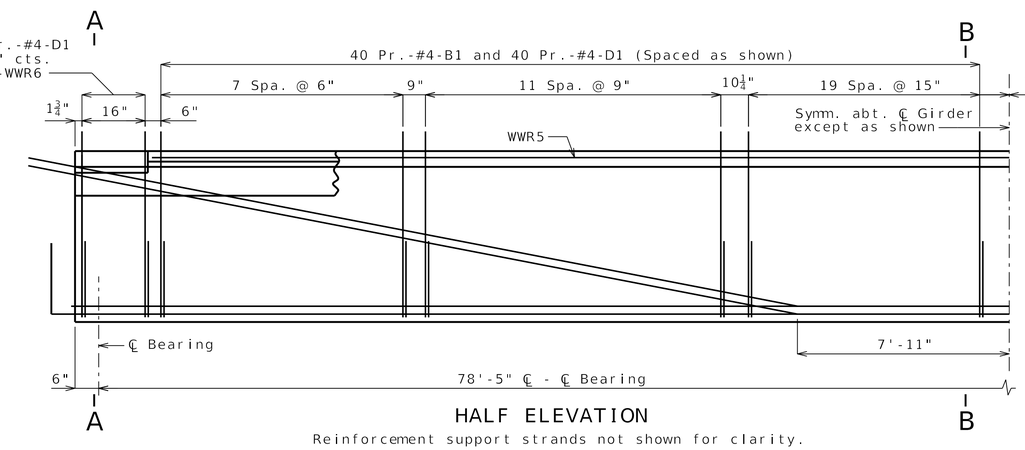

HALF ELEVATION

Reinforcement support strands not shown for clarity.

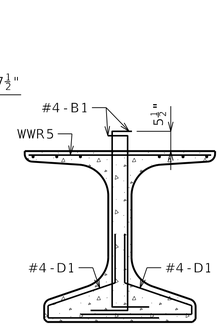

SECTION B-B

Strands not shown for clarity.

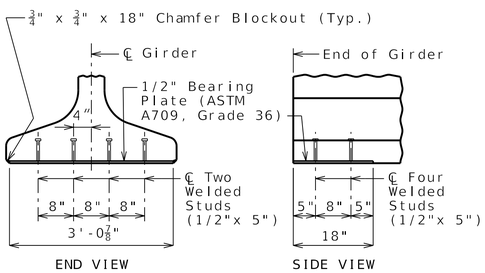

BEARING PLATE

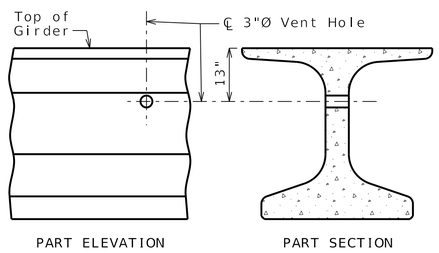

VENT HOLE

Place vent holes at or near upgrade 1/3 point of girders and clear reinforcing steel or strands by 1 1/2" minimum and steel intermediate diaphragm bolt connections by 6" minimum.

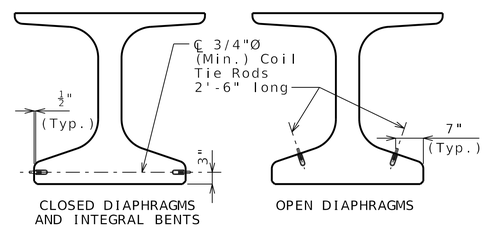

COIL TIES

Exclude coil tie at exterior face of exterior girders except at integral end bents.

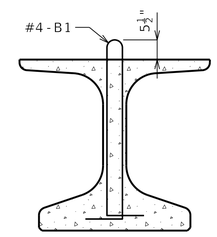

B1 BAR PERMISSIBLE ALTERNATE SHAPE

NU-GIRDERS (ALTERNATE REINFORCEMENT) - SPAN (3-4)

Detailed May 2024
Checked Aug. 2024

Note: This drawing is not to scale. Follow dimensions.

Digitally signed by Grant Luckenbill
Date: 2025.08.06 10:06:11-05'00'

GRANT C. LUCKENBILL NUMBER PE-2012018100

8-6-25

GRANT C. LUCKENBILL–ENGINEER
MO# PE–2012018100

DATE PREPARED 8/5/2025

ROUTE	STATE
248	MO
DISTRICT	SHEET NO.
BR	14

COUNTY: BARRY

JOB NO.: JSR0119

CONTRACT ID.:

PROJECT NO.:

BRIDGE NO.: A9432

DATE	DESCRIPTION

MISSOURI HIGHWAYS AND TRANSPORTATION COMMISSION
105 WEST CAPITOL
JEFFERSON CITY, MO 65102
1-888-ASK-MODOT (1-888-275-6636)

olsson
550 ST. LOUIS STREET
SPRINGFIELD, MO 65806
PHONE: 417.890.8802
CERTIFICATE OF AUTHORITY NO. 001592

IF A SEAL IS PRESENT ON THIS SHEET IT HAS BEEN ELECTRONICALLY SEALED AND DATED.

(1) Fabricator shall apply a bond breaker to this region excluding where joint filler will be applied.

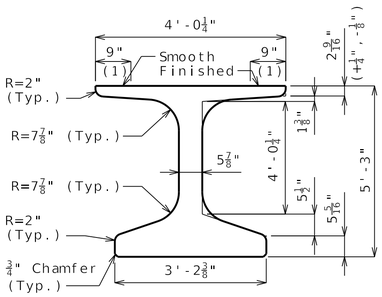

DIMENSIONS

(2) Outer strands tensioned to 2.02 kips/strand and inner strands to 8 kips/strand. Placed symmetrical about ℄ Girder. May be moved laterally in pairs.

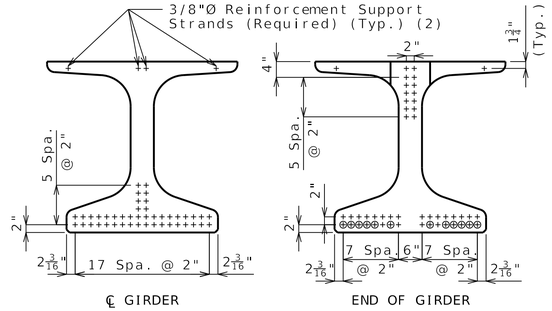

STRAND ARRANGEMENT

+ Indicates prestressing strand.

o Indicates cut & shop bend with 3'-0" projection.

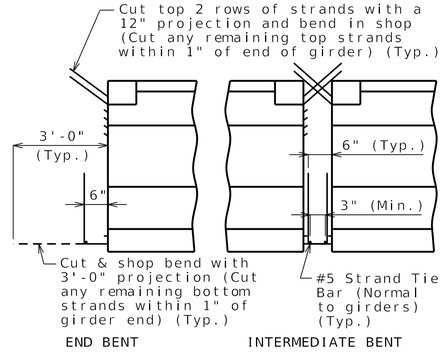

STRANDS AT GIRDER ENDS

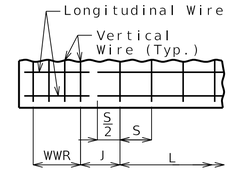

WELDED WIRE PLACEMENT

S = Vertical wire spacing

L = Length of WWR mats

J = Distance between WWR mats

Bill of Reinforcing Steel

Bars Each Girder

No.	Size/Mark		Length	Shape
152	3	G1	2'-10"	8
2	4	G3	3'-10"	20
2	4	G4	2'-3"	20
2	4	G5	2'-8"	20

Welded Wire Each Girder

Mark	Size	S	W	L	J
WWR1	D18	4"	W12	10'-4"	8"
WWR2	D18	8"	W12	20'-0"	9½"
WWR3	D18	12"	W12	63'-0"	--
WWR6	D31	2"	W12	16"	4"

Bending Diagrams

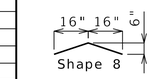

Shape 20

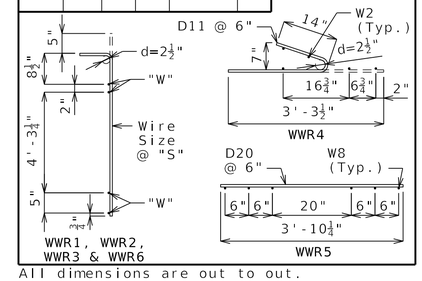

All dimensions are out to out.

Hooks and bends shall be in accordance with the CRSI Manual of Standard Practice for Detailing Reinforced Concrete Structures, Stirrup and Tie Dimensions.

Actual bar lengths are measured along centerline of bar to the nearest inch.

Minimum clearance to reinforcing shall be 1", unless otherwise shown.

All bar reinforcement shall be Grade 60.

WWR shall not be epoxy coated.

G4 and G5 not required for interior girders. G3 not required for exterior girders of intermediate spans. Half no. of G3, G4 and G5 not required for ext. girders of end spans.

General Notes:

Concrete for prestressed beams shall be Class A-1 with f'c = 8000 psi and f'ci = 6500 psi.

Use 44 strands, 0.6"Ø Grade 270, with an initial prestress force of 1933 kips.

Pretensioned members shall be in accordance with Sec 1029.

Fabricator shall be responsible for location and design of lifting devices.

Exterior and interior girders are the same except: coil ties, top flange blockout and coil inserts for slab drains.

For Girder Camber Diagram, see Sheet No. 20.

The 1 1/2"Ø holes shall be cast in the web for steel intermediate diaphragms. Drilling is not allowed. For location of holes and details of steel intermediate diaphragms, see Sheet No. 17.

For location of coil inserts at slab drains, see Sheet No. 19.

For location of coil ties at concrete diaphragms and integral bents, see Sheets No. 4 and 18.

Alternate bar reinforcing steel details are provided and may be used. The same type of reinforcing steel shall be used for all girders in all spans.

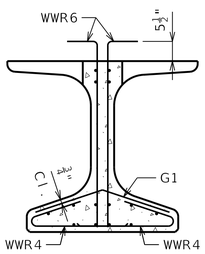

SECTION A-A

Strands not shown for clarity.

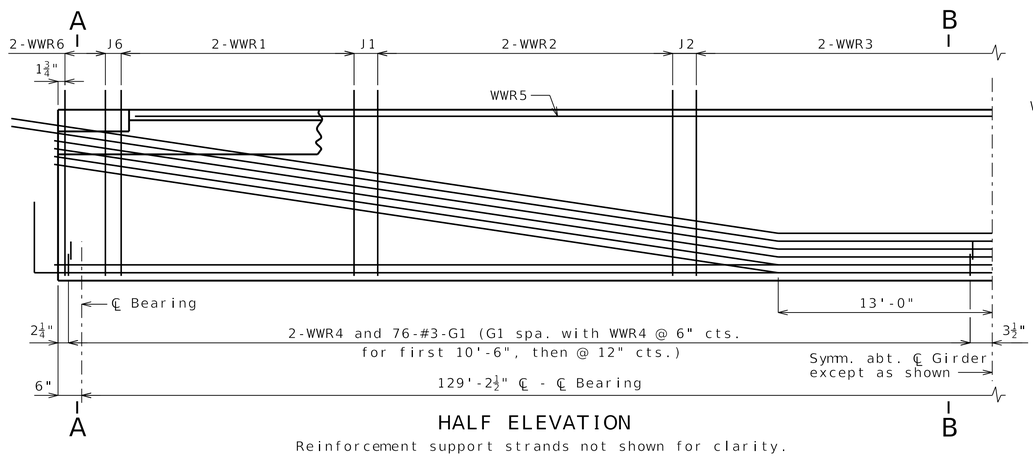

HALF ELEVATION

Reinforcement support strands not shown for clarity.

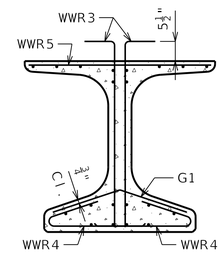

SECTION B-B

Strands not shown for clarity.

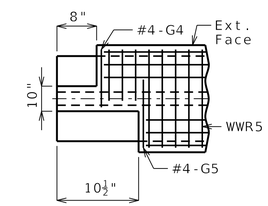

LEFT EXTERIOR GIRDER AT INTERMEDIATE BENT

Rotate 180° for right ext.

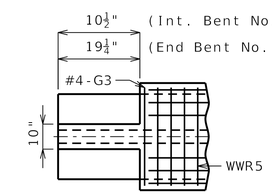

INTERIOR GIRDER AT ALL BENTS & EXTERIOR GIRDER AT END BENT

TOP FLANGE BLOCKOUT

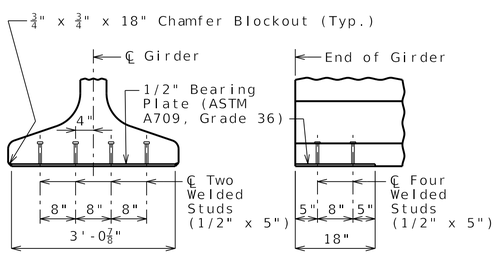

END VIEW

SIDE VIEW

BEARING PLATE

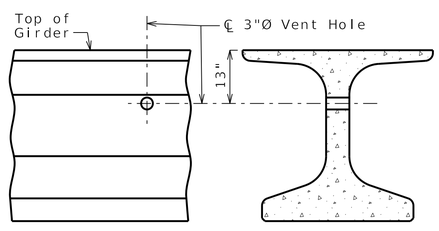

PART ELEVATION

PART SECTION

VENT HOLE

Place vent holes at or near upgrade 1/3 point of girders and clear reinforcing steel or strands by 1 1/2" minimum and steel intermediate diaphragm bolt connections by 6" minimum.

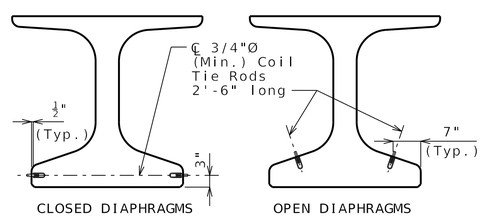

CLOSED DIAPHRAGMS AND INTEGRAL BENTS

OPEN DIAPHRAGMS

COIL TIES

Exclude coil tie at exterior face of exterior girders except at integral end bents.

NU-GIRDERS - SPAN (4-5)

Detailed May 2024
Checked Aug. 2024

Note: This drawing is not to scale. Follow dimensions.

Digitally signed by Grant Luckenbill
Date: 2025.08.06 10:06:19-05'00'
GRANT C. LUCKENBILL NUMBER PE-2012018100
8-6-25
GRANT C. LUCKENBILL–ENGINEER
MO# PE-2012018100

DATE PREPARED 8/5/2025
ROUTE 248 | STATE MO
DISTRICT BR | SHEET NO. 15
COUNTY BARRY
JOB NO. JSR0119
CONTRACT ID.
PROJECT NO.
BRIDGE NO. A9432

DESCRIPTION | DATE

MISSOURI HIGHWAYS AND TRANSPORTATION COMMISSION
105 WEST CAPITOL
JEFFERSON CITY, MO 65102
1-888-ASK-MODOT (1-888-275-6636)

olsson
550 ST. LOUIS STREET
SPRINGFIELD, MO 65806
PHONE: 417.890.8802
CERTIFICATE OF AUTHORITY NO. 001592

IF A SEAL IS PRESENT ON THIS SHEET IT HAS BEEN ELECTRONICALLY SEALED AND DATED.

(1) Fabricator shall apply a bond breaker to this region excluding where joint filler will be applied.

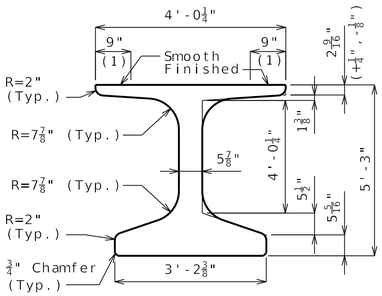

DIMENSIONS

(2) Outer strands tensioned to 2.02 kips/strand and inner strands to 8 kips/strand. Placed symmetrical about ℄ Girder. May be moved laterally in pairs.

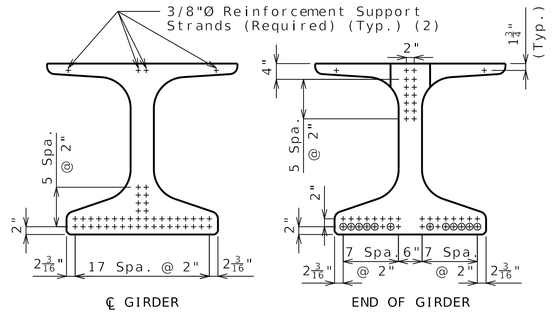

STRAND ARRANGEMENT

+ Indicates prestressing strand.

○ Indicates cut & shop bend with 3'-0" projection.

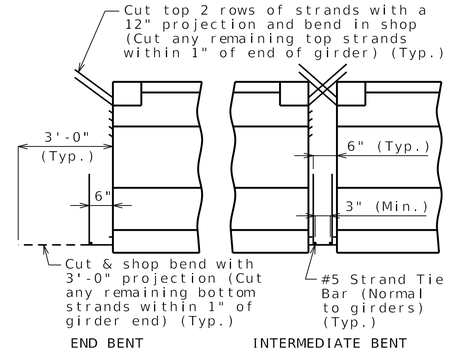

STRANDS AT GIRDER ENDS

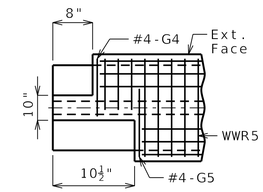

LEFT EXTERIOR GIRDER AT INTERMEDIATE BENT
Rotate 180° for right ext.

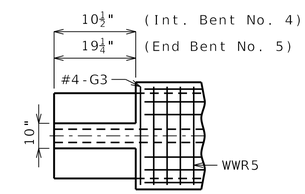

INTERIOR GIRDER AT ALL BENTS & EXTERIOR GIRDER AT END BENT

TOP FLANGE BLOCKOUT

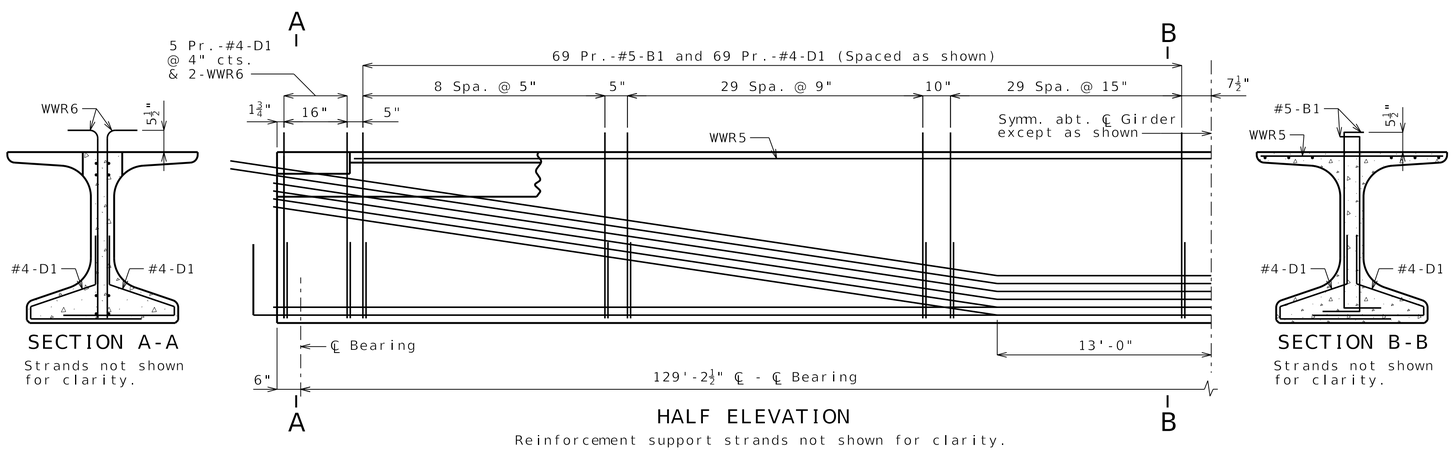

SECTION A-A
Strands not shown for clarity.

HALF ELEVATION
Reinforcement support strands not shown for clarity.

SECTION B-B
Strands not shown for clarity.

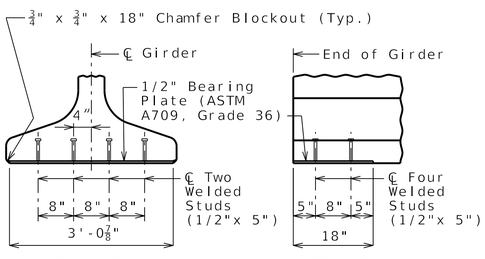

END VIEW
SIDE VIEW

BEARING PLATE

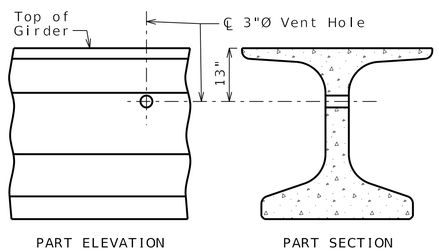

PART ELEVATION
PART SECTION

VENT HOLE

Place vent holes at or near upgrade 1/3 point of girders and clear reinforcing steel or strands by 1 1/2" minimum and steel intermediate diaphragm bolt connections by 6" minimum.

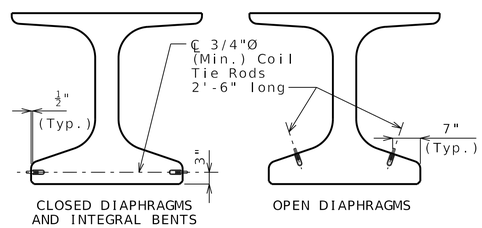

CLOSED DIAPHRAGMS AND INTEGRAL BENTS
OPEN DIAPHRAGMS

COIL TIES

Exclude coil tie at exterior face of exterior girders except at integral end bents.

Bill of Reinforcing Steel - Each Girder			
No.	Size/ Mark	Length	Shape
276	5 B1	6'-8"	11S
296	4 D1	4'-0"	9S
2	4 G3	3'-10"	20
2	4 G4	2'-3"	20
2	4 G5	2'-8"	20

Bending Diagrams

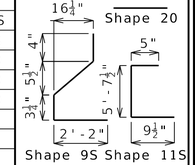

Welded Wire Reinforcement - Each Girder

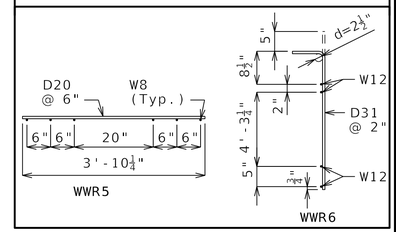

All dimensions are out to out.

Hooks and bends shall be in accordance with the CRSI Manual of Standard Practice for Detailing Reinforced Concrete Structures, Stirrup and Tie Dimensions.

Actual bar lengths are measured along centerline of bar to the nearest inch.

Minimum clearance to reinforcing shall be 1".

All bar reinforcement shall be Grade 60.

The two D1 bars may be furnished as one bar at the fabricator's option.

All B1 bars shall be epoxy coated.

G4 and G5 not required for interior girders. G3 not required for exterior girders of intermediate spans. Half no. of G3, G4 and G5 not required for ext. girders of end spans.

General Notes:

Concrete for prestressed girders shall be Class A-1 with f'c = 8000 psi and f'ci = 6500 psi.

Use 44 strands, 0.6"Ø Grade 270, with an initial prestress force of 1933 kips.

Pretensioned members shall be in accordance with Sec 1029.

Fabricator shall be responsible for location and design of lifting devices.

Exterior and interior girders are the same except: coil ties, top flange blockout and coil inserts for slab drains.

For Girder Camber Diagram, see Sheet No. 20.

The 1 1/2"Ø holes shall be cast in the web for steel intermediate diaphragms. Drilling is not allowed. For location of holes and details of steel intermediate diaphragms, see Sheet No. 17.

For location of coil inserts at slab drains, see Sheet No. 19.

For location of coil ties at concrete diaphragms and integral bents, see Sheets No. 4 and 18.

Alternate bar reinforcing steel details are provided and may be used. The same type of reinforcing steel shall be used for all girders in all spans.

Digitally signed by Grant Luckenbill
Date: 2025.08.06 10:06:03-05'00'

GRANT C. LUCKENBILL NUMBER PE-2012018100
8-6-25
GRANT C. LUCKENBILL–ENGINEER
MO# PE-2012018100

DATE PREPARED	
8/5/2025	
ROUTE 248	STATE MO
DISTRICT BR	SHEET NO. 16
COUNTY BARRY	
JOB NO. JSR0119	
CONTRACT ID.	
PROJECT NO.	
BRIDGE NO. A9432	

DATE	DESCRIPTION

IF A SEAL IS PRESENT ON THIS SHEET IT HAS BEEN ELECTRONICALLY SEALED AND DATED.

MISSOURI HIGHWAYS AND TRANSPORTATION COMMISSION
105 WEST CAPITOL
JEFFERSON CITY, MO 65102
1-888-ASK-MODOT (1-888-275-6636)

olsson
550 ST. LOUIS STREET
SPRINGFIELD, MO 65806
PHONE: 417.890.8802
CERTIFICATE OF AUTHORITY NO. 001592

NU-GIRDERS (ALTERNATE REINFORCEMENT) - SPAN (4-5)

Detailed May 2024
Checked Aug. 2024

Note: This drawing is not to scale. Follow dimensions.

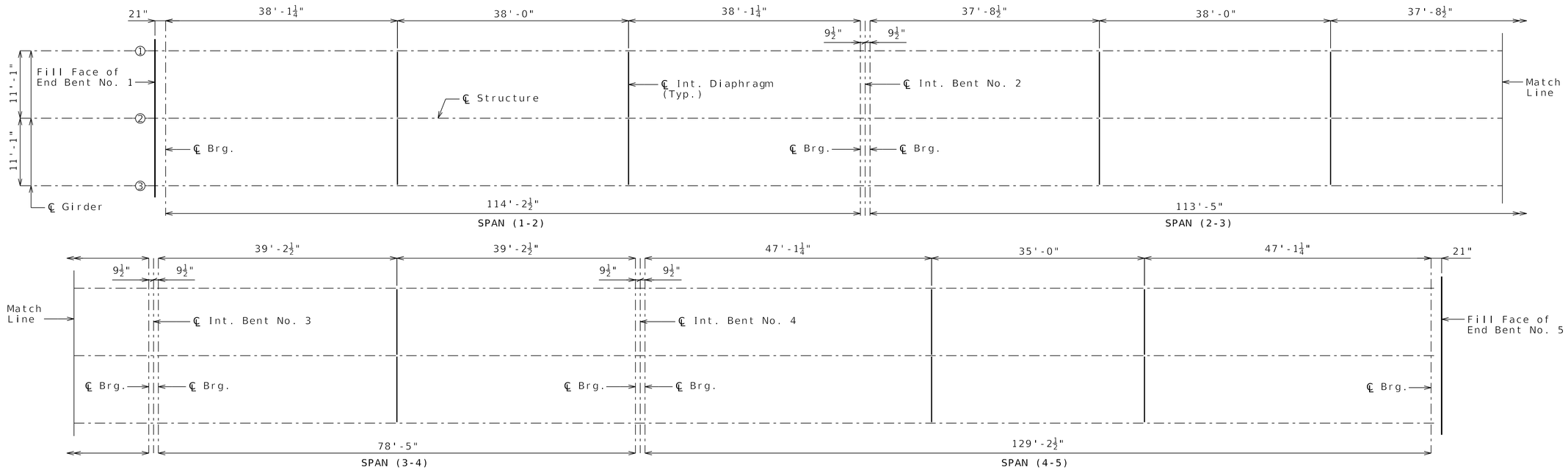

PLAN SHOWING LOCATION OF STEEL INTERMEDIATE DIAPHRAGMS

Longitudinal dimensions are horizontal.

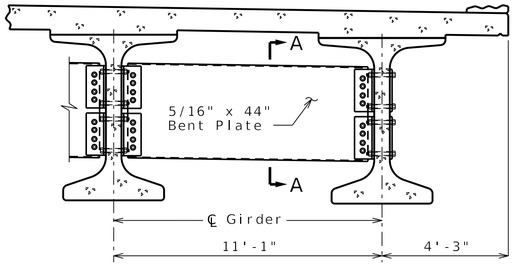

PART SECTION SHOWING INTERMEDIATE DIAPHRAGMS

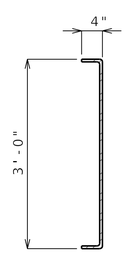

SECTION A-A

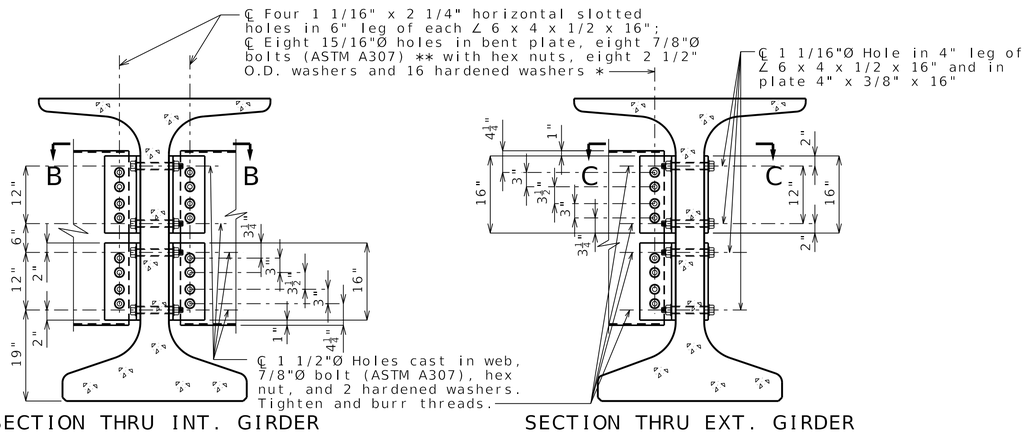

SECTION THRU INT. GIRDER AT DIAPHRAGM

SECTION THRU EXT. GIRDER AT DIAPHRAGM

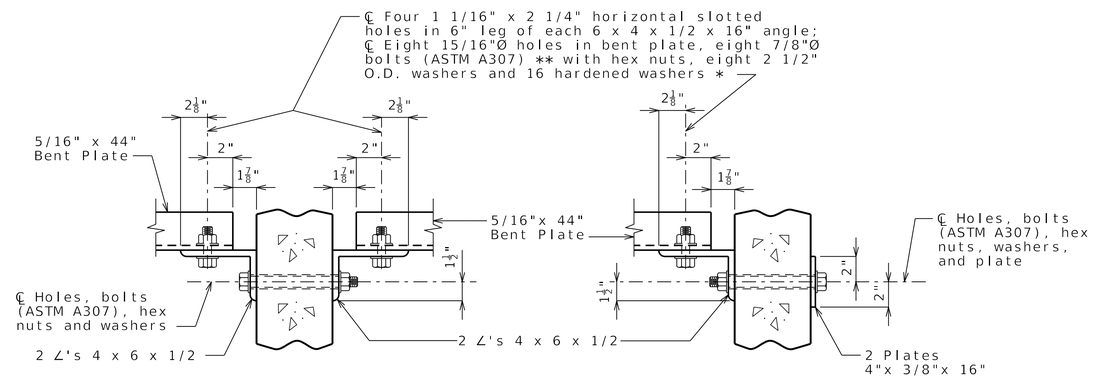

SECTION B-B

SECTION C-C

STEEL DIAPHRAGM NOTES:

* In lieu of 2 1/2" outside diameter washers, contractor may substitute a 3/16" (Min. thickness) plate with four 15/16"Ø holes and one hardened washer per bolt.

** Bolts shall be tightened to provide a tension of one-half that specified in Sec 712 for high strength bolt installation. ASTM F3125 Grade A325 Type 1 bolts may be substituted for and installed in accordance with the requirement s for the specified ASTM A307 bolts.

All diaphragm materials including bolts, nuts, and washers shall be galvanized.

Fabricated structural steel shall be ASTM A709 Grade 36 except as noted.

Payment for furnishing and installing steel intermediate diaphragms will be considered completely covered by the contract unit price for Steel Intermediate Diaphragm for P/S Concrete Girders.

Shop drawings will not be required for steel intermediate diaphragms and angle connections.

Detailed May 2024
Checked Aug. 2024

Note: This drawing is not to scale. Follow dimensions.

STEEL INTERMEDIATE DIAPHRAGMS

Digitally signed by Grant Luckenbill
Date: 2025.08.06 10:05:16-05'00'

GRANT C. LUCKENBILL NUMBER PE-2012018100

8-6-25
GRANT C. LUCKENBILL-ENGINEER
MO# PE-2012018100

DATE PREPARED	
8/5/2025	
ROUTE 248	STATE MO
DISTRICT BR	SHEET NO. 17
COUNTY BARRY	
JOB NO. JSR0119	
CONTRACT ID.	
PROJECT NO.	
BRIDGE NO. A9432	

DATE	DESCRIPTION

IF A SEAL IS PRESENT ON THIS SHEET IT HAS BEEN ELECTRONICALLY SEALED AND DATED.

MISSOURI HIGHWAYS AND TRANSPORTATION COMMISSION
105 WEST CAPITOL
JEFFERSON CITY, MO 65102
1-888-ASK-MODOT (1-888-275-6636)

olsson
550 ST. LOUIS STREET
SPRINGFIELD, MO 65806
PHONE: 417.890.8802
CERTIFICATE OF AUTHORITY NO. 001592

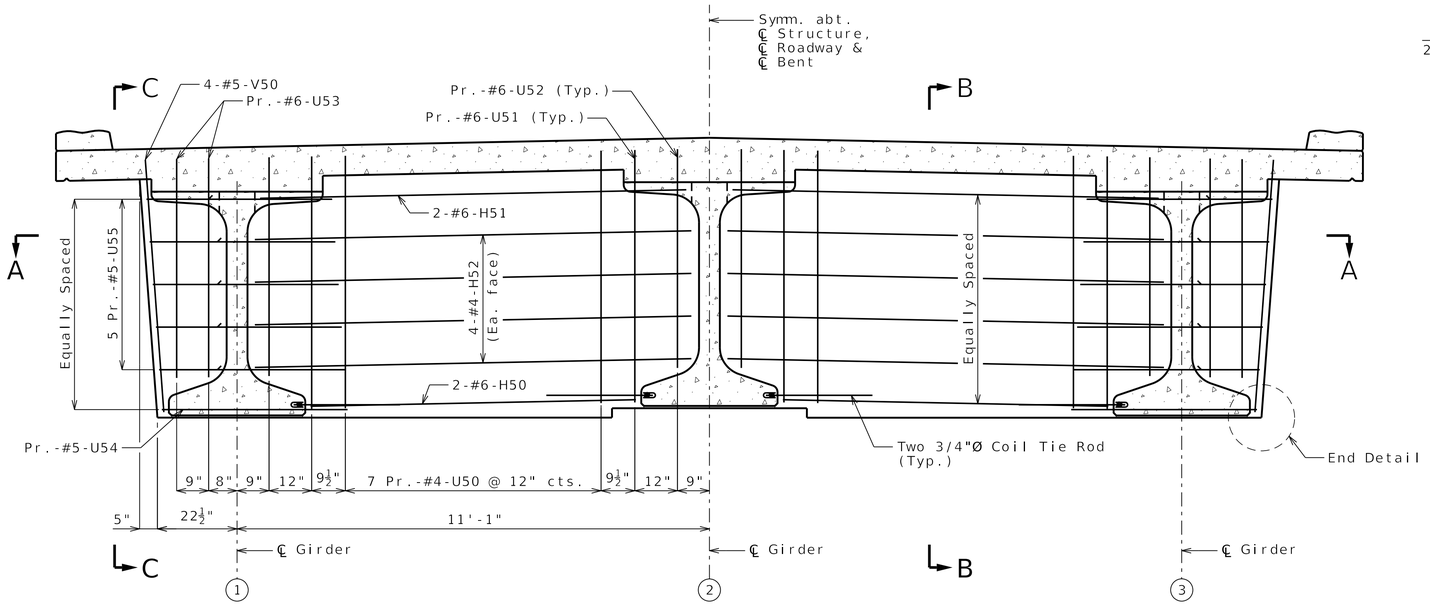

SECTION NEAR INTERMEDIATE BENT

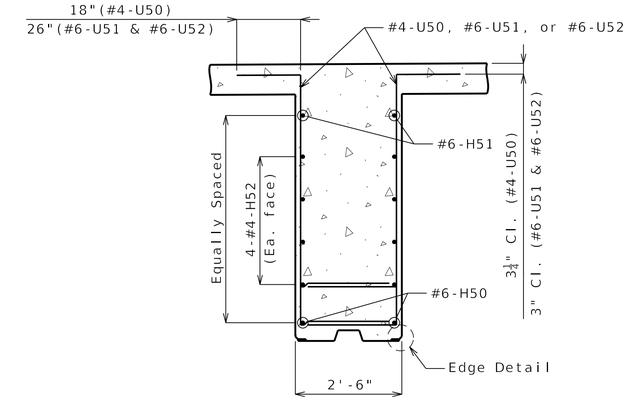

SECTION B-B

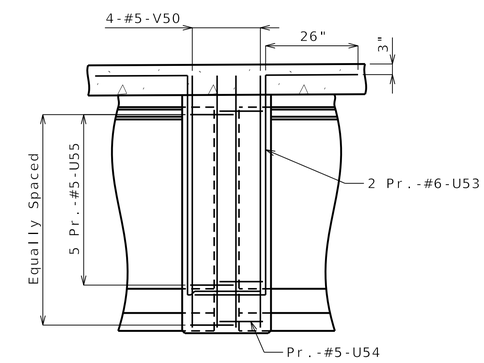

ELEVATION C-C

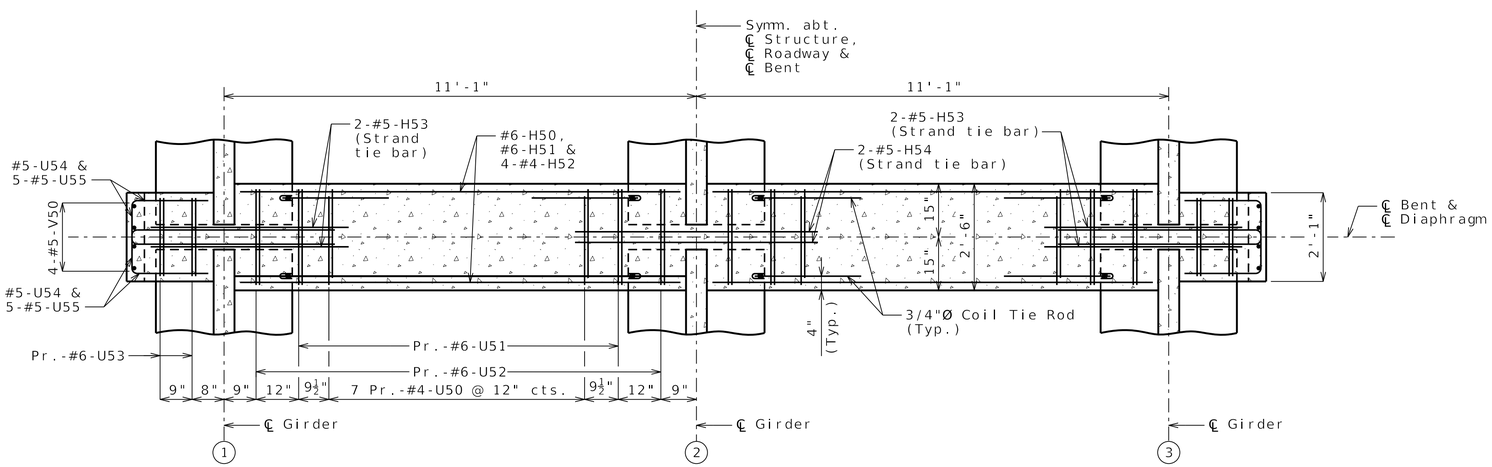

SECTION A-A

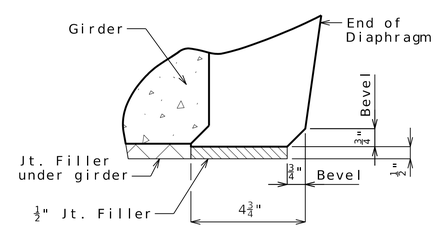

END DETAIL

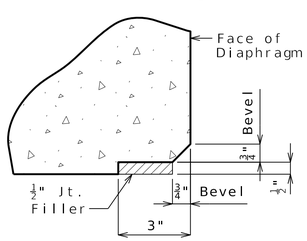

EDGE DETAIL

Notes:

For locations of Strand Tie Bars, see Sheets No. 9 thru 16.

For locations and details of Coil Tie Rods, see Sheets No. 9 thru 16.

Diaphragms at intermediate bents shall be built vertical.

CONCRETE DIAPHRAGMS AT INTERMEDIATE BENTS NO. 2, 3 & 4

Detailed May 2024
Checked Aug. 2024

Note: This drawing is not to scale. Follow dimensions.

Digitally signed by Grant Luckenbill
Date: 2025.08.06 10:06:51-05'00'

GRANT C. LUCKENBILL
NUMBER
PE-2012018100

8-6-25
GRANT C. LUCKENBILL–ENGINEER
MO# PE-2012018100

DATE PREPARED	
8/5/2025	
ROUTE	STATE
248	MO
DISTRICT	SHEET NO.
BR	18
COUNTY	
BARRY	
JOB NO.	
JSR0119	
CONTRACT ID.	
PROJECT NO.	
BRIDGE NO.	
A9432	

DATE	DESCRIPTION

IF A SEAL IS PRESENT ON THIS SHEET IT HAS BEEN ELECTRONICALLY SEALED AND DATED.

MISSOURI HIGHWAYS AND TRANSPORTATION COMMISSION
105 WEST CAPITOL
JEFFERSON CITY, MO 65102
1-888-ASK-MODOT (1-888-275-6636)

olsson
550 ST. LOUIS STREET
SPRINGFIELD, MO 65806
PHONE: 417.890.8802
CERTIFICATE OF AUTHORITY NO. 001592

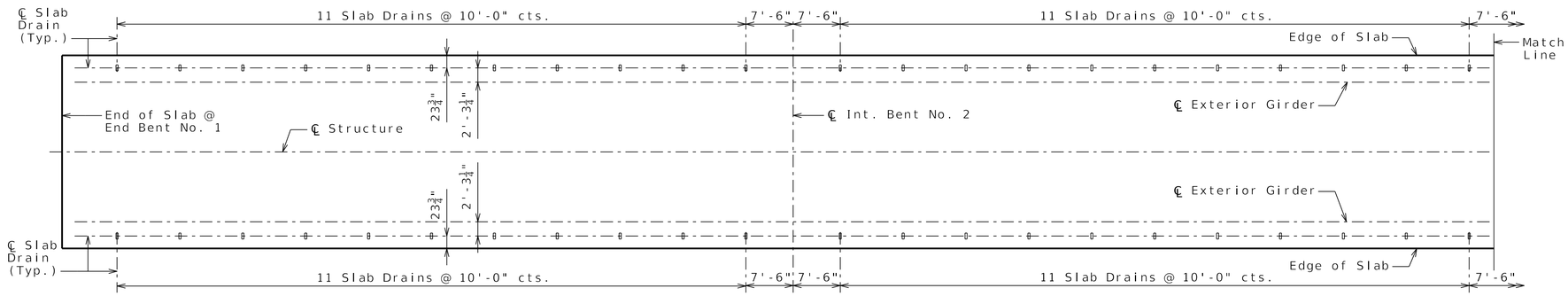

PLAN OF SLAB SHOWING SLAB DRAIN LOCATIONS

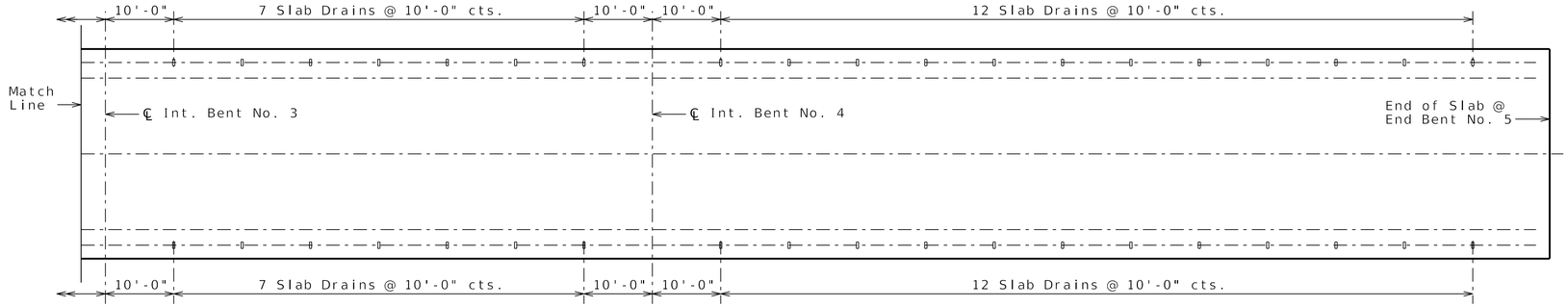

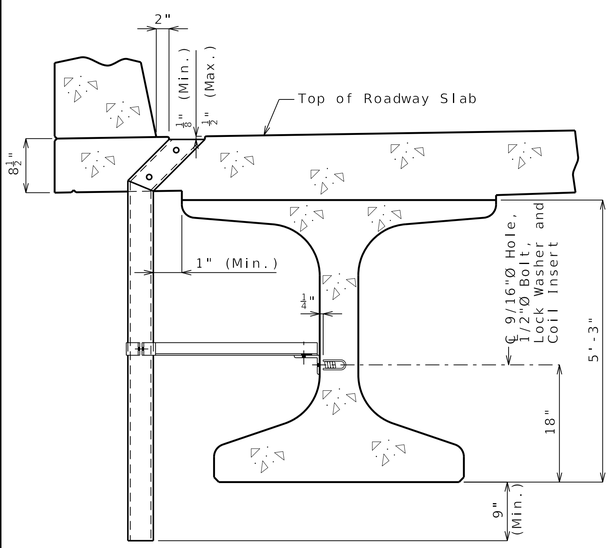

PART SECTION NEAR DRAIN

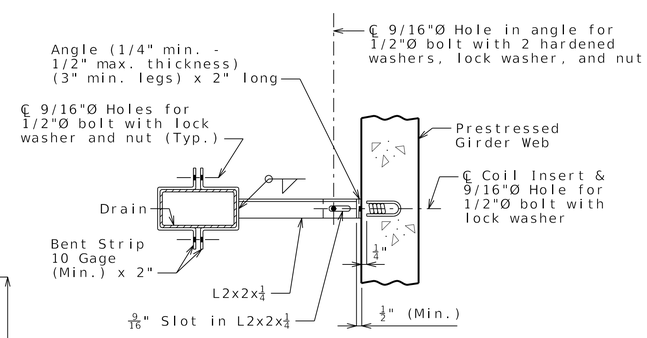

PART SECTION SHOWING BRACKET ASSEMBLY

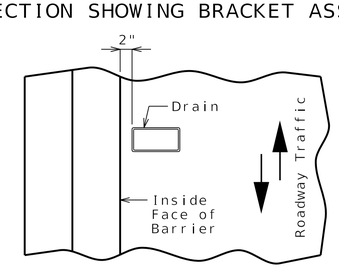

PART PLAN OF SLAB AT DRAIN

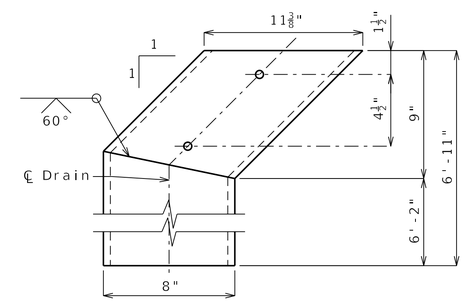

ELEVATION OF DRAIN

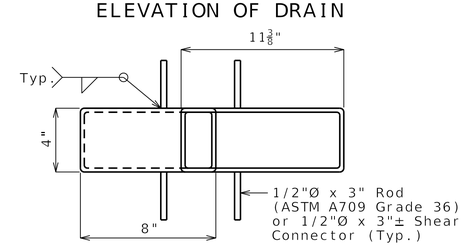

PLAN OF STEEL DRAIN OPTION

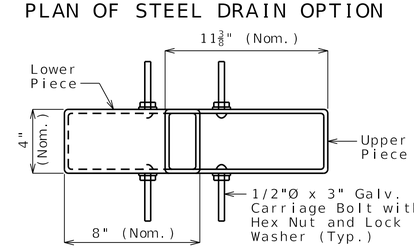

PLAN OF FRP DRAIN OPTION

General Notes:

Contractor shall have the option to construct either steel or FRP slab drains. All drains shall be of same type.

Slab drain bracket assembly shall be ASTM A709 Grade 36 steel.

Locate drains in slab by dimensions shown in Part Section Near Drain.

Reinforcing steel shall be shifted to clear drains.

The coil inserts and bracket assembly shall be galvanized in accordance with ASTM A123.

All bolts, hardened washers, lock washers and nuts shall be galvanized in accordance with AASHTO M 232 (ASTM A153), Class C.

All 1/2"Ø bolts shall be ASTM A307.

Shop drawings will not be required for the slab drains and the bracket assembly.

The coil insert required for the bracket assembly attachment shall be located on the prestressed girder shop drawings.

Coil inserts shall have a concrete pull-out strength (ultimate load) of at least 2,500 pounds in 5,000 psi concrete.

The bolt required to attach the slab drain bracket assembly to the prestressed girder web shall be supplied by the prestressed girder fabricator.

Notes for Steel Drain:

Slab drains may be fabricated of either 1/4" welded sheets of ASTM A709 Grade 36 steel or from 1/4" structural steel tubing ASTM A500 or A501.

Outside dimensions of drains are 8" x 4".

The drains shall be galvanized in accordance with ASTM A123.

Notes for FRP Drain:

Drains shall be machine filament-wound thermosetting resin tubing meeting the requirements of ASTM D2996 with the following exceptions:

Shape of drains shall be rectangular with outside nominal dimensions of 8" x 4".

Minimum reinforced wall thickness shall be 1/4 inch.

The resin used shall be ultraviolet (UV) resistant and/or have UV inhibitors mixed throughout. Drains may have an exterior coating for additional UV resistance.

The color of the slab drain shall be gray (Federal Standard 26373). The color shall be uniform throughout the resin and any coating used.

The combination of materials used in the manufacture of the drains shall be tested for UV resistance in accordance with ASTM D4329 Cycle A. The representative material shall withstand at least 500 hours of testing with only minor discoloration and without any physical deterioration. The contractor shall furnish the results of the required ultraviolet testing prior to acceptance of the slab drains.

At the contractor's option, drains may be field cut. The method of cutting FRP slab drain shall be as recommended by the manufacturer to ensure a smooth, chip free cut.

Both upper and lower drain pieces shall be rigidly connected to each other. Drain flow shall not be obstructed. Approval of the engineer is required.

SLAB DRAINS

Detailed May 2024
Checked Aug. 2024

Note: This drawing is not to scale. Follow dimensions.

Digitally signed by Grant Luckenbill
Date: 2025.08.06 10:05:42-05'00'

GRANT C. LUCKENBILL NUMBER PE-2012018100

8-6-25
GRANT C. LUCKENBILL-ENGINEER
MO# PE-2012018100

DATE PREPARED	
8/5/2025	
ROUTE 248	STATE MO
DISTRICT BR	SHEET NO. 19
COUNTY BARRY	
JOB NO. JSR0119	
CONTRACT ID.	
PROJECT NO.	
BRIDGE NO. A9432	

DESCRIPTION	DATE

MISSOURI HIGHWAYS AND TRANSPORTATION COMMISSION
105 WEST CAPITOL
JEFFERSON CITY, MO 65102
1-888-ASK-MODOT (1-888-275-6636)

olsson
550 ST. LOUIS STREET
SPRINGFIELD, MO 65806
PHONE: 417.890.8802
CERTIFICATE OF AUTHORITY NO. 001592

IF A SEAL IS PRESENT ON THIS SHEET IT HAS BEEN ELECTRONICALLY SEALED AND DATED.

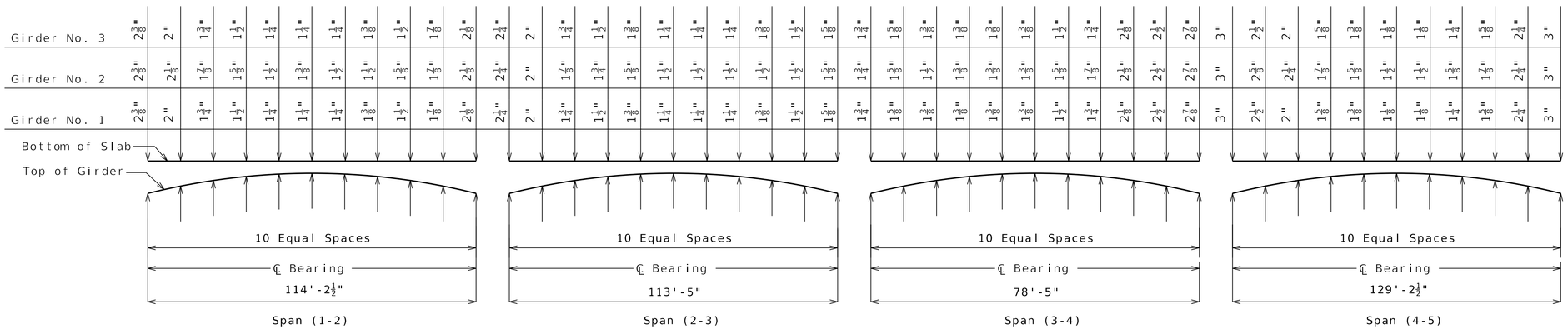

THEORETICAL SLAB HAUNCHING DIAGRAM (ESTIMATED AT 90 DAYS)

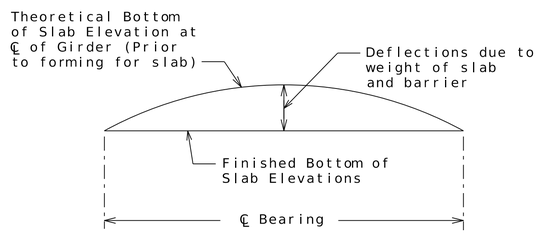

TYPICAL SLAB ELEVATIONS DIAGRAM

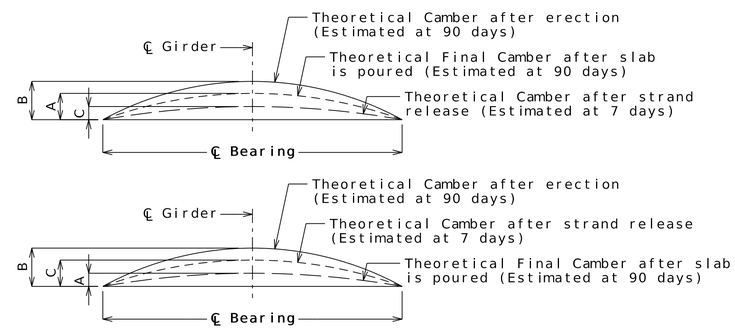

Theoretical Bottom of Slab Elevations at Centerline of Girder (Prior to forming for slab) (Estimated at 90 days)

Girder Number	Span (1-2) (114'-2½" ℄ Brg. - ℄ Brg.)										
	℄ Brg.	.10	.20	.30	.40	.50	.60	.70	.80	.90	℄ Brg.
1	1080.05	1080.15	1080.25	1080.34	1080.42	1080.48	1080.53	1080.57	1080.59	1080.61	1080.62
2	1080.27	1080.38	1080.48	1080.58	1080.66	1080.72	1080.77	1080.81	1080.83	1080.83	1080.84
3	1080.05	1080.15	1080.25	1080.34	1080.42	1080.48	1080.53	1080.57	1080.59	1080.61	1080.62
Girder Number	Span (2-3) (113'-5" ℄ Brg. - ℄ Brg.)										
	℄ Brg.	.10	.20	.30	.40	.50	.60	.70	.80	.90	℄ Brg.
1	1080.62	1080.73	1080.82	1080.91	1080.99	1081.05	1081.10	1081.14	1081.16	1081.18	1081.19
2	1080.85	1080.95	1081.06	1081.15	1081.23	1081.29	1081.34	1081.38	1081.40	1081.41	1081.41
3	1080.62	1080.73	1080.82	1080.91	1080.99	1081.05	1081.10	1081.14	1081.16	1081.18	1081.19
Girder Number	Span (3-4) (78'-5" ℄ Brg. - ℄ Brg.)										
	℄ Brg.	.10	.20	.30	.40	.50	.60	.70	.80	.90	℄ Brg.
1	1081.20	1081.25	1081.30	1081.34	1081.38	1081.42	1081.46	1081.50	1081.53	1081.56	1081.59
2	1081.42	1081.47	1081.52	1081.57	1081.61	1081.65	1081.69	1081.72	1081.75	1081.78	1081.81
3	1081.20	1081.25	1081.30	1081.34	1081.38	1081.42	1081.46	1081.50	1081.53	1081.56	1081.59
Girder Number	Span (4-5) (129'-2½" ℄ Brg. - ℄ Brg.)										
	℄ Brg.	.10	.20	.30	.40	.50	.60	.70	.80	.90	℄ Brg.
1	1081.60	1081.74	1081.88	1082.00	1082.10	1082.18	1082.23	1082.26	1082.28	1082.29	1082.31
2	1081.82	1081.98	1082.12	1082.25	1082.35	1082.43	1082.48	1082.51	1082.52	1082.52	1082.53
3	1081.60	1081.74	1081.88	1082.00	1082.10	1082.18	1082.23	1082.26	1082.28	1082.29	1082.31

Elevations are based on a constant slab thickness of 8 1/2" and include allowance for theoretical dead load deflections due to weight of slab and barrier.

Girder	Span (1-2)			Span (2-3)			Span (3-4)			Span (4-5)		
	A	B	C	A	B	C	A	B	C	A	B	C
Exterior	1"	2 7/8"	1 5/8"	5/8"	2 3/8"	1 3/8"	7/8"	1 1/4"	3/4"	1 3/8"	4 1/2"	2 1/2"
Interior	7/8"			3/8"			7/8"			1"		

GIRDER CAMBER DIAGRAM

If girder camber is different from that shown in the camber diagram, in order to maintain minimum slab thickness adjustment of the slab haunches, an increase in slab thickness or raise in grade uniformly throughout the structure shall be necessary. The haunch shall be limited to ensure the projecting girder reinforcement is embedded into slab at least 2 inches. No payment will be made for additional labor or materials required for variation in haunching, slab thickness or grade adjustments.

Conversion Factors for Girder Camber (Estimated at 90 days):

0.1 pt. = 0.314 x 0.5 pt.
0.2 pt. = 0.593 x 0.5 pt.
0.3 pt. = 0.813 x 0.5 pt.
0.4 pt. = 0.952 x 0.5 pt.

Detailed May 2024
Checked Aug. 2024

Note: This drawing is not to scale. Follow dimensions.

Digitally signed by Grant Luckenbill
Date: 2025.08.06 10:06:37-05'00'

GRANT C. LUCKENBILL
NUMBER
PE-2012018100

8-6-25
GRANT C. LUCKENBILL-ENGINEER
MO# PE-2012018100

DATE PREPARED
8/5/2025

ROUTE	STATE
248	MO
DISTRICT	SHEET NO.
BR	20

COUNTY
BARRY

JOB NO.
JSR0119

CONTRACT ID.

PROJECT NO.

BRIDGE NO.
A9432

DATE	DESCRIPTION

IF A SEAL IS PRESENT ON THIS SHEET IT HAS BEEN ELECTRONICALLY SEALED AND DATED.

MISSOURI HIGHWAYS AND TRANSPORTATION COMMISSION
105 WEST CAPITOL
JEFFERSON CITY, MO 65102
1-888-ASK-MODOT (1-888-275-6636)

olsson
550 ST. LOUIS STREET
SPRINGFIELD, MO 65806
PHONE: 417.890.8802
CERTIFICATE OF AUTHORITY NO. 001592

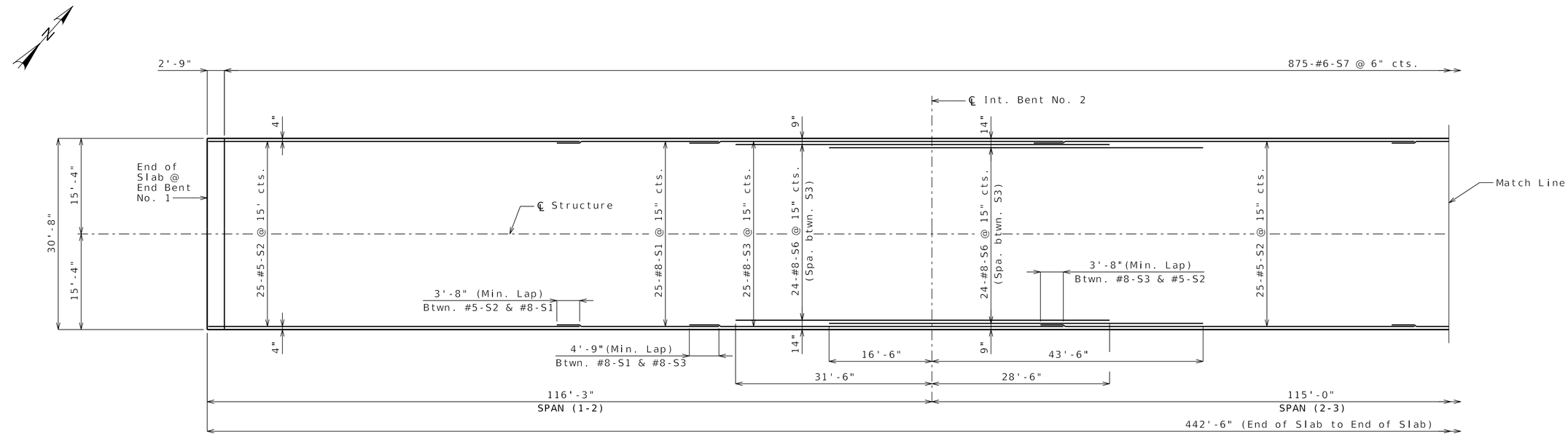

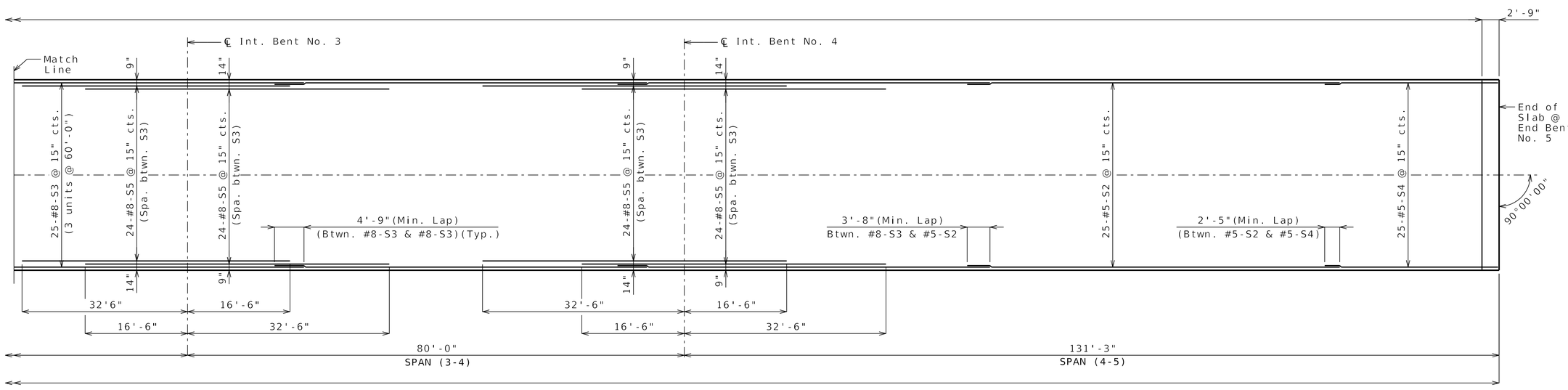

PLAN OF SLAB SHOWING TOP REINFORCEMENT

Notes:

Longitudinal slab dimensions are measured horizontally.

For Plan of Slab Showing Bottom Reinforcement, see Sheet No. 22.

For Section Thru Slab and Slab Pouring Sequence, see Sheet No. 23.

For details and reinforcement of Type D Barrier not shown, see Sheets No. 24 and 25.

For Theoretical Slab Haunching Diagram, see Sheet No. 20.

For Theoretical Bottom of Slab Elevations, see Sheet No. 20.

For details and locations of Slab Drains, see Sheet No. 19.

Detailed May 2024
Checked Aug. 2024

Note: This drawing is not to scale. Follow dimensions.

Digitally signed by Grant Luckenbill
Date: 2025.08.06 10:08:14-05'00'

GRANT C. LUCKENBILL NUMBER PE-2012018100

8-6-25
GRANT C. LUCKENBILL-ENGINEER
MO# PE-2012018100

DATE PREPARED	
8/5/2025	
ROUTE 248	STATE MO
DISTRICT BR	SHEET NO. 21
COUNTY BARRY	
JOB NO. JSR0119	
CONTRACT ID.	
PROJECT NO.	
BRIDGE NO. A9432	

DATE	DESCRIPTION

IF A SEAL IS PRESENT ON THIS SHEET IT HAS BEEN ELECTRONICALLY SEALED AND DATED.

MISSOURI HIGHWAYS AND TRANSPORTATION COMMISSION
105 WEST CAPITOL
JEFFERSON CITY, MO 65102
1-888-ASK-MODOT (1-888-275-6636)

olsson
550 ST. LOUIS STREET
SPRINGFIELD, MO 65806
PHONE: 417.890.8802
CERTIFICATE OF AUTHORITY NO. 001592

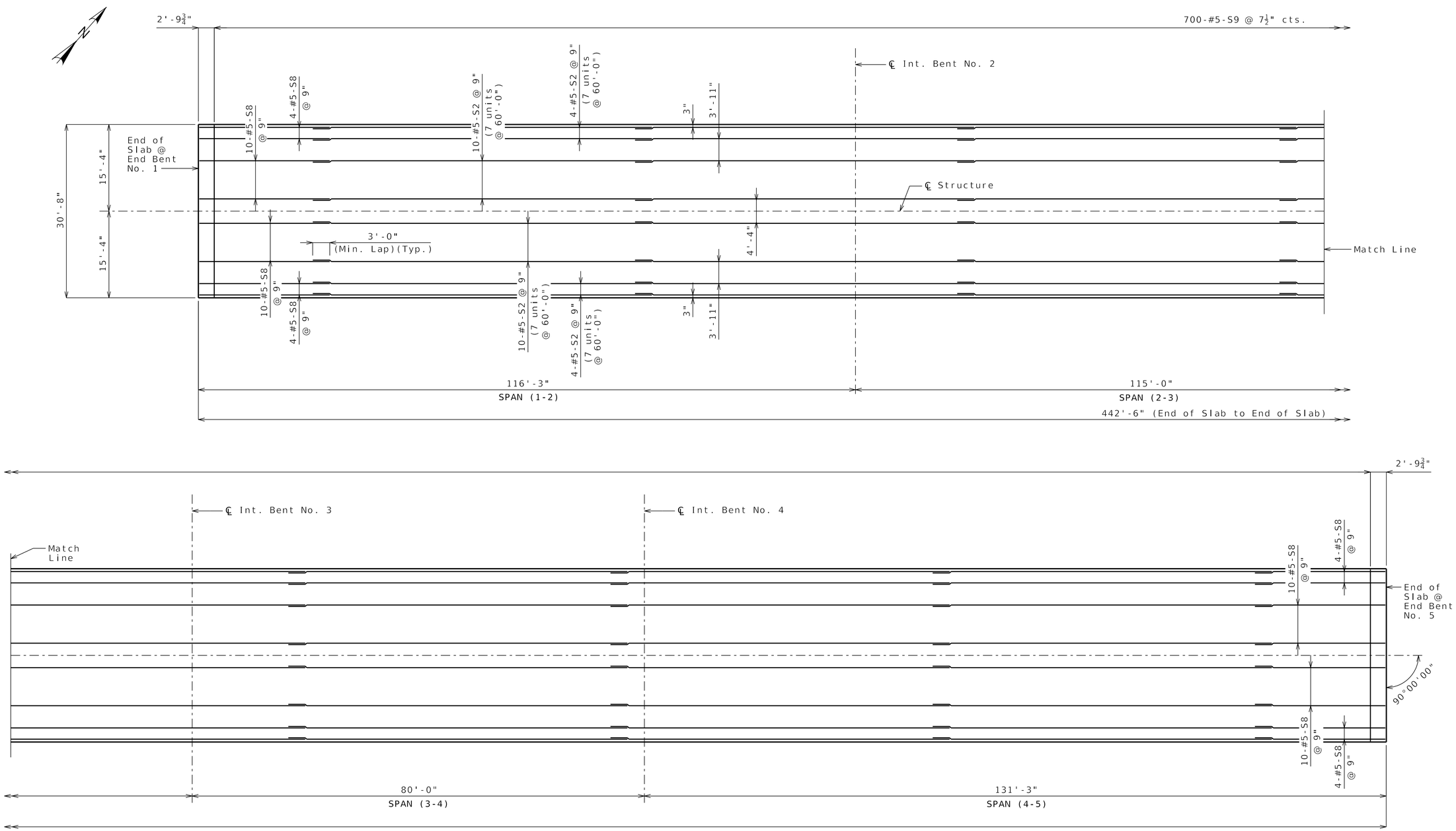

Notes:

Longitudinal slab dimensions are measured horizontally.

For Plan of Slab Showing Top Reinforcement, see Sheet No. 21.

For Section Thru Slab and Slab Pouring Sequence, see Sheet No. 23.

For details and reinforcement of Type D Barrier not shown, see Sheets No. 24 and 25.

For Theoretical Slab Haunching Diagram, see Sheet No. 20.

For Theoretical Bottom of Slab Elevations, see Sheet No. 20.

For details and locations of Slab Drains, see Sheet No. 19.

PLAN OF SLAB SHOWING BOTTOM REINFORCEMENT

Detailed May 2024
Checked Aug. 2024

Note: This drawing is not to scale. Follow dimensions.

Digitally signed by Grant Luckenbill
Date: 2025.08.06 10:08:34-05'00'

GRANT C. LUCKENBILL NUMBER PE-2012018100

8-6-25
GRANT C. LUCKENBILL–ENGINEER
MO# PE–2012018100

DATE PREPARED	
8/5/2025	
ROUTE 248	STATE MO
DISTRICT BR	SHEET NO. 22
COUNTY BARRY	
JOB NO. JSR0119	
CONTRACT ID.	
PROJECT NO.	
BRIDGE NO. A9432	

DATE	DESCRIPTION

IF A SEAL IS PRESENT ON THIS SHEET IT HAS BEEN ELECTRONICALLY SEALED AND DATED.

MISSOURI HIGHWAYS AND TRANSPORTATION COMMISSION
105 WEST CAPITOL
JEFFERSON CITY, MO 65102
1-888-ASK-MODOT (1-888-275-6636)

olsson
550 ST. LOUIS STREET
SPRINGFIELD, MO 65806
PHONE: 417.890.8802
CERTIFICATE OF AUTHORITY NO. 001592

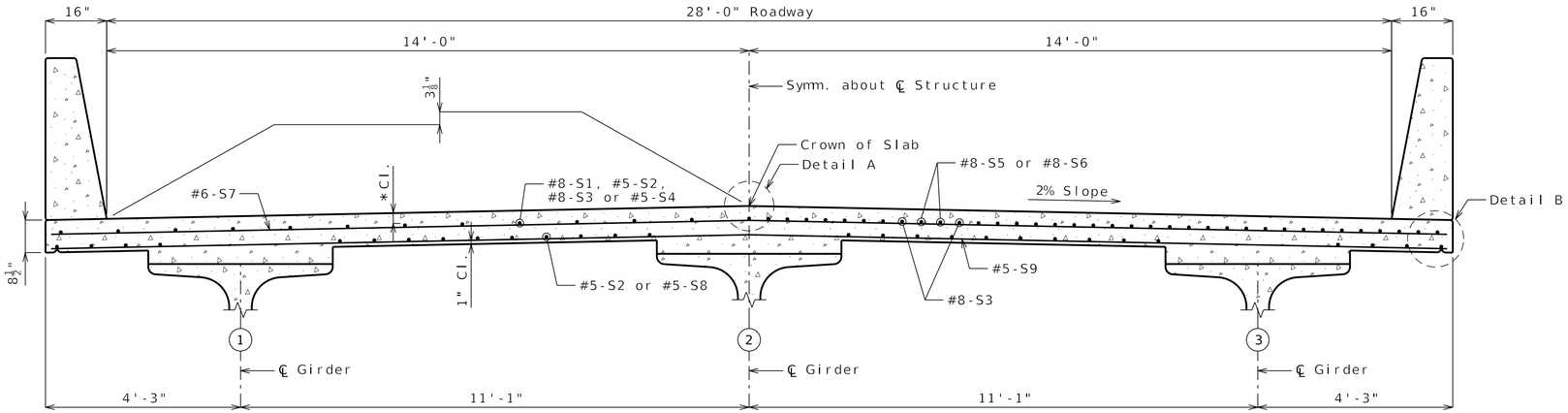

HALF SECTION NEAR MIDSPAN

HALF SECTION NEAR INTERMEDIATE BENT

SECTION THRU SLAB

* 3 1/8"(#5)
2 1/4"(#8)

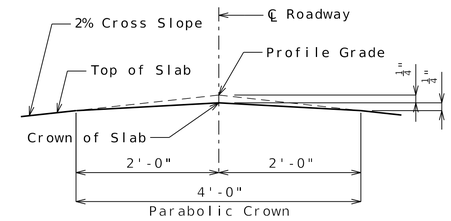

DETAIL A

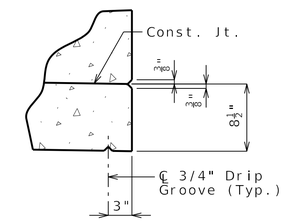

DETAIL B

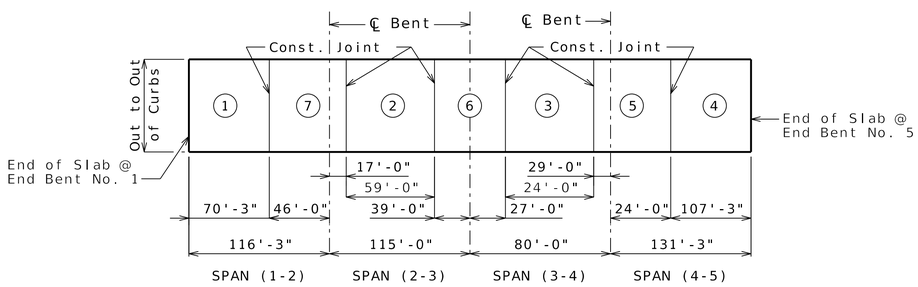

	Sequence of Pours							Min. Rate of Pour Cu. Yds./Hr.
	Direction							With Retarder
Basic Sequence	1	2	3	4	5	6	7	25
	Either Direction							
Alternate pours to the basic skip sequence are subject to the approval of the engineer in accordance with Sec 703.								
Alternate A Pours	1	7 + 2	6 + 3	5 + 4				32
	End to 7	1 to 6	2 to 5	3 to End				
Alternate B Pours	1 + 7 + 2	6 + 3	5 + 4					32
	End to 6	2 to 5	3 to End					
Alternate C Pours	1 + 7 + 2	6 + 3 + 5 + 4						32
	End to 6	2 to End						
Alternate D Pours	1 + 7 + 2 + 6 + 3 + 5 + 4							32
	End to End							

The contractor shall furnish an approved retarder to retard the set of concrete to 2.5 hours, and shall pour and satisfactorily finish the slab pours at the rate given.

The concrete diaphragm at the intermediate bents and integral end bents shall be poured a minimum of 30 minutes and a maximum 2 hours before the slab is poured.

SLAB POURING SEQUENCE

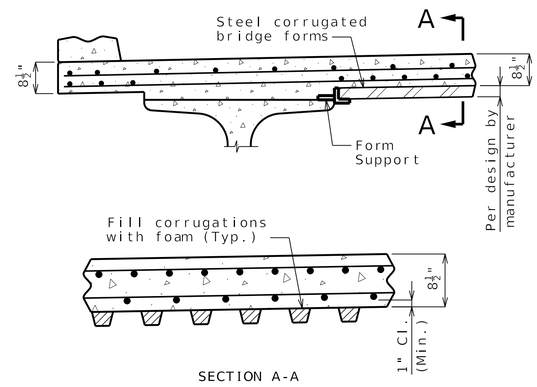

OPTIONAL STAY-IN-PLACE FORM DETAILS

Stay-In-Place Forms:

Corrugated steel forms, supports, closure elements and accessories shall be in accordance with grade requirement and coating designation G165 of ASTM A653. Complete shop drawings of the permanent steel deck forms shall be required in accordance with Sec 1080.

Corrugations of stay-in-place forms shall be filled with an expanded polystyrene material. The polystyrene material shall be placed in the forms with an adhesive in accordance with the manufacturer's recommendations.

Form sheets shall not rest directly on the top of girder flanges. Sheets shall be securely fastened to form supports with a minimum bearing length of one inch on each end. Form supports shall be placed in direct contact with the flange. Drilling holes in the girder flanges will not be permitted. All steel fabrication and construction shall be in accordance with Sec 1080 and 712. Certified field welders will not be required for welding of the form supports.

The design of stay-in-place corrugated steel forms is per manufacturer which shall be in accordance with Sec 703 for false work and forms. Maximum actual weight of corrugated steel forms allowed shall be 4 psf assumed for girder loading.

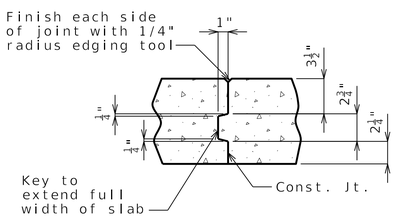

SLAB CONSTRUCTION JOINT

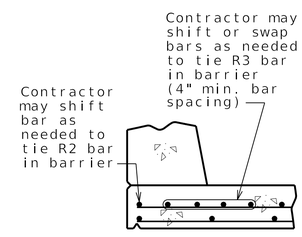

OPTIONAL SHIFTING TOP BARS AT BARRIER

Notes:

For reinforcement of barrier not shown, see Sheets No. 24 and 25.

For Theoretical Bottom of Slab Elevations, Girder Camber Diagram and Theoretical Slab Haunching Diagram, see Sheet No. 20.

For Plan of Slab Showing Reinforcement, see Sheets No. 21 and 22.

SLAB DETAILS

Detailed May 2024
Checked Aug. 2024

Note: This drawing is not to scale. Follow dimensions.

Digitally signed by Grant Luckenbill
Date: 2025.08.06 10:08:22-05'00'
GRANT C. LUCKENBILL NUMBER PE-2012018100
8-6-25
GRANT C. LUCKENBILL-ENGINEER
MO# PE-2012018100

DATE PREPARED 8/5/2025
ROUTE 248 | STATE MO
DISTRICT BR | SHEET NO. 23
COUNTY BARRY
JOB NO. JSR0119
CONTRACT ID.
PROJECT NO.
BRIDGE NO. A9432

DESCRIPTION | DATE

MISSOURI HIGHWAYS AND TRANSPORTATION COMMISSION
105 WEST CAPITOL
JEFFERSON CITY, MO 65102
1-888-ASK-MODOT (1-888-275-6636)

olsson
550 ST. LOUIS STREET
SPRINGFIELD, MO 65806
PHONE: 417.890.8802
CERTIFICATE OF AUTHORITY NO. 001592

IF A SEAL IS PRESENT ON THIS SHEET IT HAS BEEN ELECTRONICALLY SEALED AND DATED.

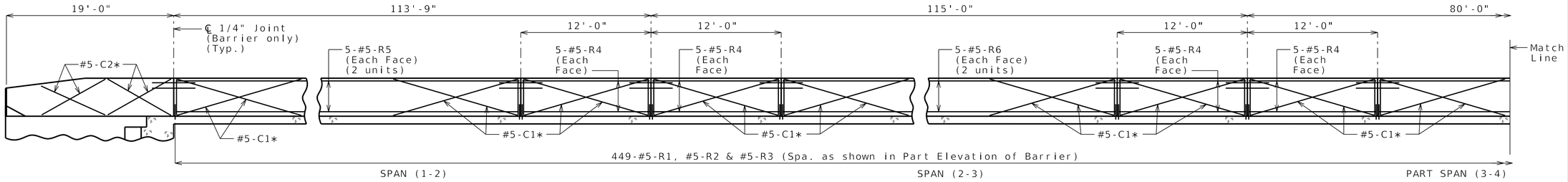

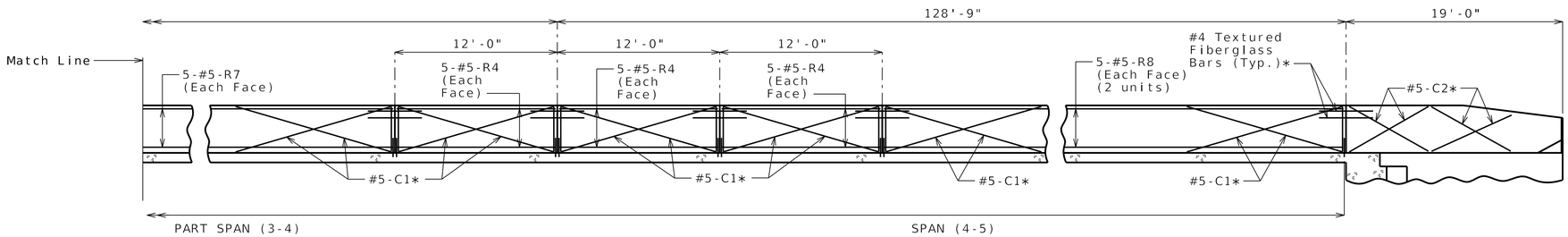

ELEVATION OF BARRIER

(Left barrier shown, right barrier similar)

Longitudinal dimensions are horizontal.

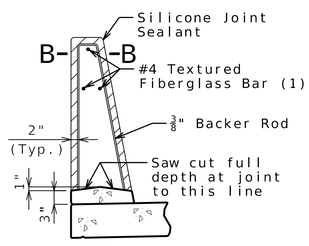

SECTION THRU SAW CUT JOINT

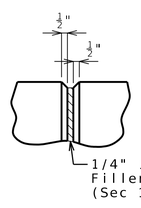

PART ELEVATION AT FORMED JOINT

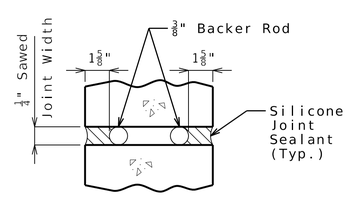

SECTION B-B

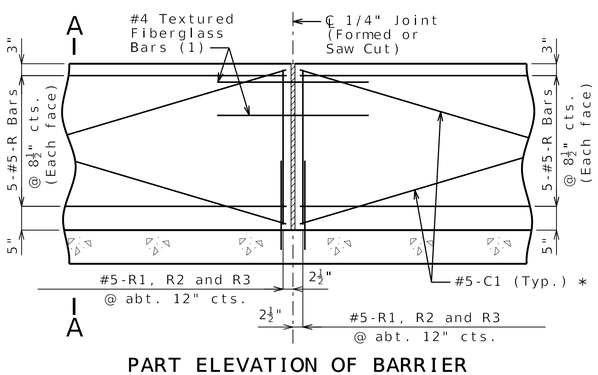

PART ELEVATION OF BARRIER

(1) Four feet long, centered on joint, slip-formed option only

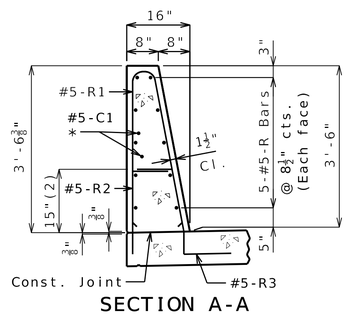

SECTION A-A

Use a minimum lap of 3'-1" for #5 horizontal barrier bars.

The cross-sectional area above the slab is 3.52 square feet.

(2) To top of bar

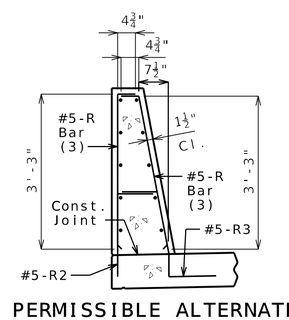

R-BAR PERMISSIBLE ALTERNATE SHAPE

(3) The R1 bar may be separated into two bars as shown, at the contractor's option, only when slip forming is not used. (All dimensions are out to out.)

General Notes:

* Slip-formed option only.

Conventional forming or slip forming may be used. Saw cut joints may be used with conventional forming.

Top of barrier shall be built parallel to grade and barrier joints (except at end bents) normal to grade.

All exposed edges of barrier shall have either a 1/2-inch radius or a 3/8-inch bevel, unless otherwise noted.

Payment for all concrete and reinforcement, complete in place, will be considered completely covered by the contract unit price for Type D Barrier per linear foot.

Concrete in barrier shall be Class B-1.

Measurement of barrier is to the nearest linear foot for each structure, measured along the outside top of slab from end of wing to end of wing.

Concrete traffic barrier delineators shall be placed on top of the barrier as shown on Missouri Standard Plan 617.10 and in accordance with Sec 617. Delineators on bridges with two-lane, two-way traffic shall have retroreflective sheeting on both sides. Concrete traffic barrier delineators will be considered completely covered by the contract unit price for Type D Barrier.

Joint sealant and backer rods shall be in accordance with Sec 717 for silicone joint sealant for saw cut and formed joints.

For slip-formed option, both sides of barrier shall have a vertically broomed finish and the top shall have a transversely broomed finish.

TYPE D BARRIER

Detailed May 2024
Checked Aug. 2024

Note: This drawing is not to scale. Follow dimensions.

Sheet No. 24 of 36

Digitally signed by Grant Luckenbill
Date: 2025.08.06 10:07:58-05'00'

GRANT C. LUCKENBILL NUMBER PE-2012018100

8-6-25
GRANT C. LUCKENBILL-ENGINEER
MO# PE-2012018100

DATE PREPARED	
8/5/2025	
ROUTE 248	STATE MO
DISTRICT BR	SHEET NO. 24
COUNTY BARRY	
JOB NO. JSR0119	
CONTRACT ID.	
PROJECT NO.	
BRIDGE NO. A9432	

DESCRIPTION	DATE

IF A SEAL IS PRESENT ON THIS SHEET IT HAS BEEN ELECTRONICALLY SEALED AND DATED.

MISSOURI HIGHWAYS AND TRANSPORTATION COMMISSION
105 WEST CAPITOL
JEFFERSON CITY, MO 65102
1-888-ASK-MODOT (1-888-275-6636)

olsson
550 ST. LOUIS STREET
SPRINGFIELD, MO 65806
PHONE: 417.890.8802
CERTIFICATE OF AUTHORITY NO. 001592

F:\2023\04001-04500\023-04082\40-Design\Microstation\JSR0119\023-04082_JSR0119\plan_sheets\16 Bridge Sheets\B_A9432_024_JSR0119_TYPE D BARRIER ELEVATION.dgn 8:22:22 AM 8/5/2025

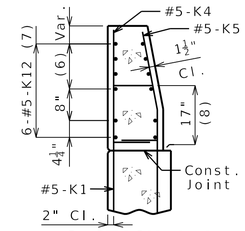

SECTION A-A

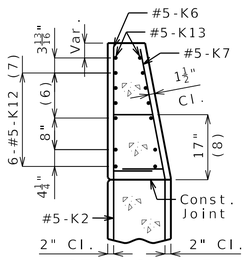

SECTION B-B

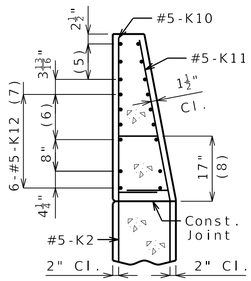

SECTION C-C

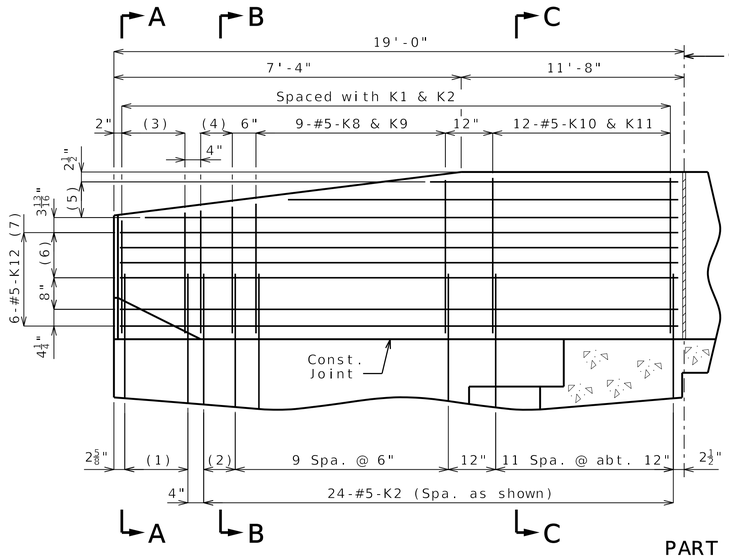

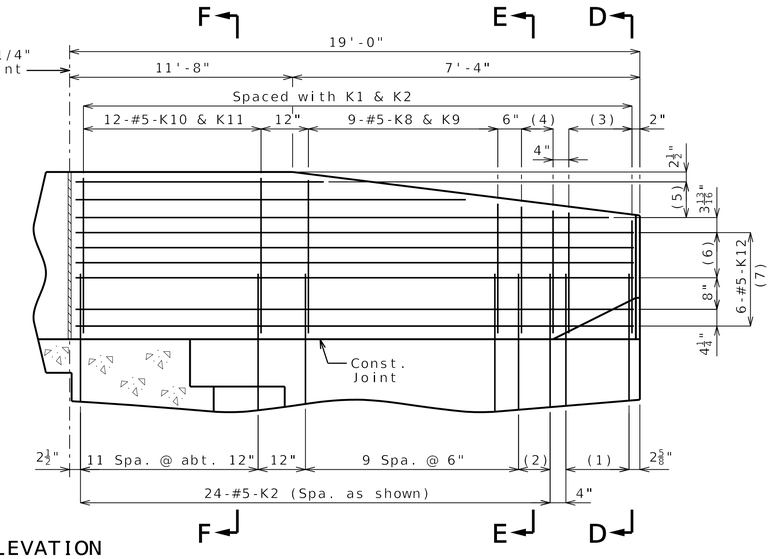

PART ELEVATION

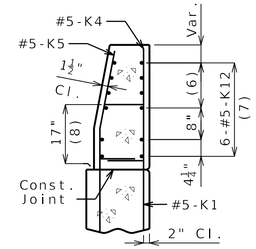

SECTION D-D

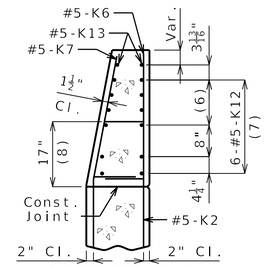

SECTION E-E

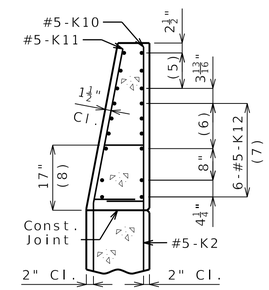

SECTION F-F

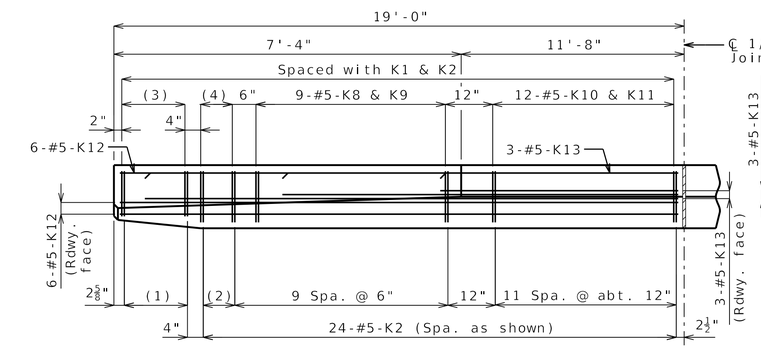

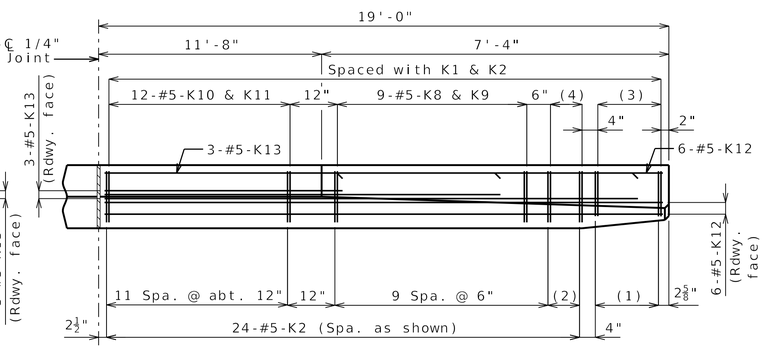

PART PLAN

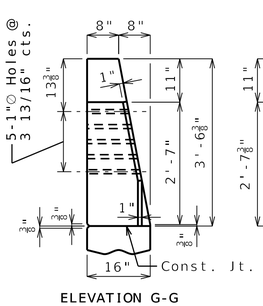

ELEVATION G-G

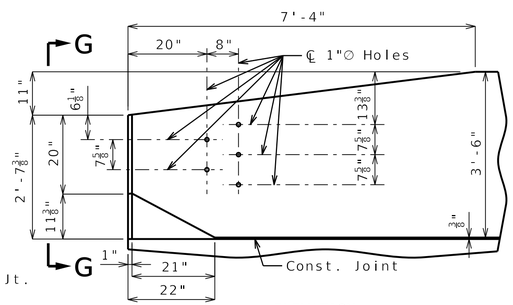

ELEVATION

(1) 5-#5-K1 @ 4" cts.

(2) 2 spaces @ 4"

(3) 5-#5-K4 & K5

(4) 3-#5-K6 & K7

(5) 3-#5-K13 @ 4½" cts., each face

(6) 3 spaces @ 3 13/16"

(7) Spaced as shown, each face

(8) To top of bar

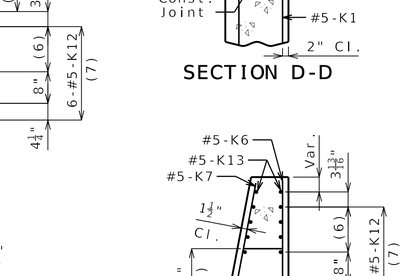

K10-K11 BAR PERMISSIBLE ALTERNATE SHAPE

(Other K bars not shown for clarity)

The K10-K11 bar combination may be furnished as one bar as shown, at the contractor's option.

All dimensions are out to out.

* Transition to zero at Type A curb for gutter lines to match.

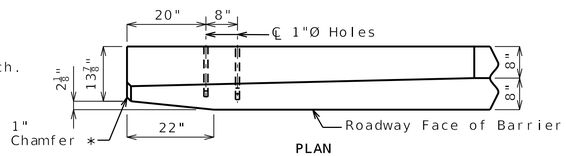

PLAN

DETAILS OF GUARD RAIL ATTACHMENT

General Notes:

Concrete traffic barrier delineators shall be placed on top of the barrier as shown on Missouri Standard Plan 617.10 and in accordance with Sec 617. Delineators on bridges with two-lane, two-way traffic shall have retroreflective sheeting on both sides. Concrete traffic barrier delineators will be considered completely covered by the contract unit price for Type D Barrier.

Reinforcing Steel:
Minimum clearance to reinforcing steel shall be 1 1/2" except as shown for bars embedded into end bent.

TYPE D BARRIER AT END BENTS

(Left barrier shown, right barrier similar)

Detailed May 2024
Checked Aug. 2024

Note: This drawing is not to scale. Follow dimensions.

F:\2023\04001-04500\023-04082\40-Design\Microstation\JSR0119\023-04082_JSR0119\plan_sheets\16 Bridge Sheets\B_A9432_025_JSR0119_TYPE D BARRIER AT EB.DGN 8:22:24 AM 8/5/2025

Digitally signed by Grant Luckenbill
Date: 2025.08.06 10:09:00-05'00'
GRANT C. LUCKENBILL NUMBER PE-2012018100
8-6-25
GRANT C. LUCKENBILL–ENGINEER
MO# PE–2012018100

DATE PREPARED	
8/5/2025	
ROUTE 248	STATE MO
DISTRICT BR	SHEET NO. 25
COUNTY BARRY	
JOB NO. JSR0119	
CONTRACT ID.	
PROJECT NO.	
BRIDGE NO. A9432	

DATE	DESCRIPTION

IF A SEAL IS PRESENT ON THIS SHEET IT HAS BEEN ELECTRONICALLY SEALED AND DATED.

MISSOURI HIGHWAYS AND TRANSPORTATION COMMISSION
105 WEST CAPITOL
JEFFERSON CITY, MO 65102
1-888-ASK-MODOT (1-888-275-6636)

olsson
550 ST. LOUIS STREET
SPRINGFIELD, MO 65806
PHONE: 417.890.8802
CERTIFICATE OF AUTHORITY NO. 001592

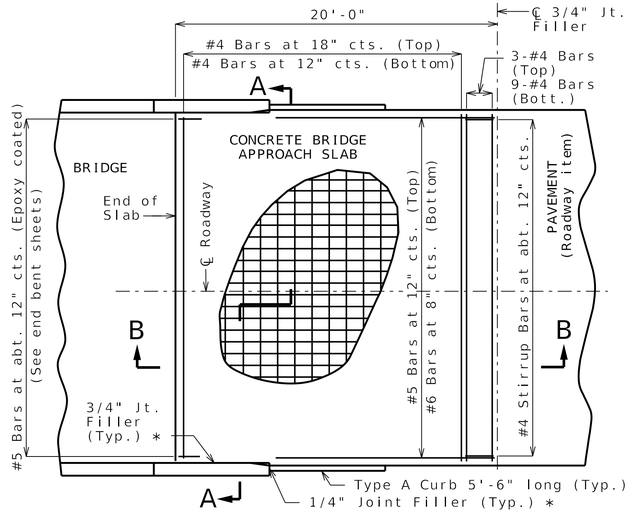

PART PLAN OF SQUARED STRUCTURE

(Skewed structure similar)

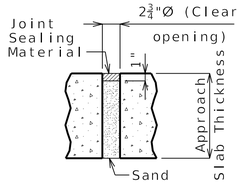

UNDERSEAL ACCESS HOLE DETAIL

(If required)

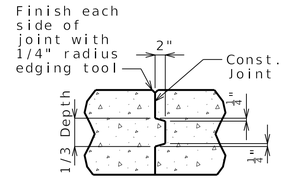

CONSTRUCTION JOINT DETAIL

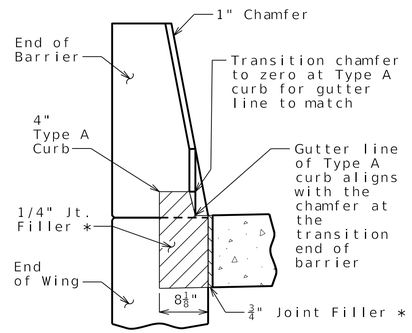

SECTION BETWEEN CURB AND BARRIER

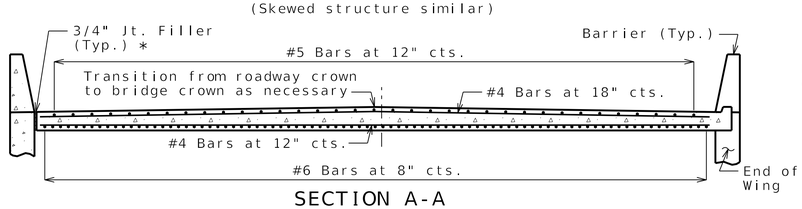

SECTION A-A

With the approval of the engineer, the contractor may crown the bottom of the approach slab to match the crown of the roadway surface.

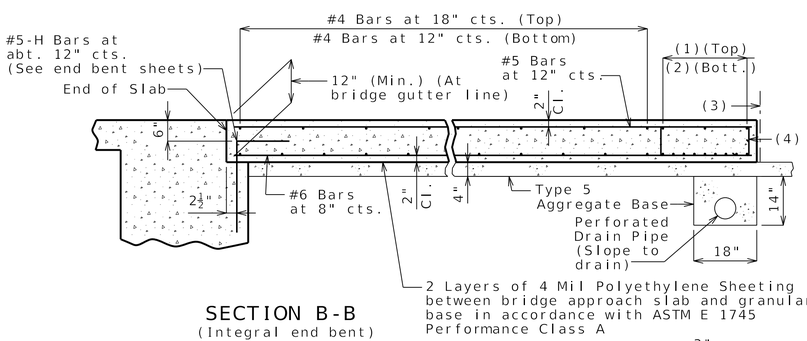

(1) 3-#4 Bars

(2) 9-#4 Bars

(3) ℄ 3/4" Jt. Filler

(4) #4 Stirrup Bars at abt. 12" cts.; 2'-0"x 8" (Min.) out to out; Actual length = 5'-10" (Min.); 90° stirrup hook at bottom; Stirrup height (8") and actual length vary due to crown.

SECTION B-B

(Integral end bent)

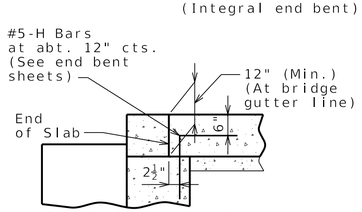

PART SECTION B-B

(Non-integral end bent)

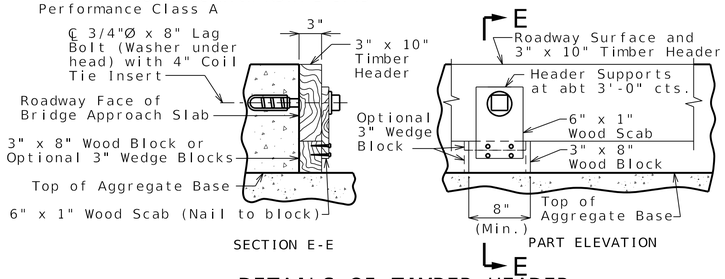

SECTION E-E

PART ELEVATION

DETAILS OF TIMBER HEADER

Remove timber header when concrete pavement is placed.

OPTIONAL CONCRETE SLAB

Notes For Concrete Slab Only:

All concrete for the bridge approach slab shall be in accordance with Sec 503 (f'c = 4,000 psi).

The reinforcing steel in the bridge approach slab shall be epoxy coated Grade 60 with fy = 60,000 psi.

Longitudinal construction joints in bridge approach slab shall be aligned with longitudinal construction joints in bridge slab.

Minimum clearance to reinforcing steel shall be 1 1/2", unless otherwise shown.

The reinforcing steel in the bridge approach slab shall be continuous. The transverse reinforcing steel may be made continuous by providing a minimum lap splice of 23 inches for #4 bars, or by mechanical bar splice.

All joint filler shall be in accordance with Sec 1057 for preformed fiber expansion joint filler except as noted.

Payment for furnishing all materials, labor and excavation necessary to construct the concrete bridge approach slab, including the timber header, underdrain, Type 5 aggregate base, joint filler, and all other appurtenances and incidental work as shown on this sheet, complete in place, will be considered completely covered by the contract unit price for Bridge Approach Slab (Minor) per square yard.

See Missouri Standard Plan 609.00 for details of Type A curb.

Drain pipe may be either 6" diameter corrugated metallic-coated pipe underdrain, 4" diameter corrugated polyvinyl chloride (PVC) drain pipe, or 4" diameter corrugated polyethylene (PE) drain pipe.

* Seal joint between vertical face of approach slab and wing with sealant in accordance with Sec 717 for silicone joint sealant for saw cut and formed joints.

General Notes:

Contractor shall have the option to construct either slab except as noted.

The contractor shall pour and satisfactorily finish the bridge slab before placing the bridge approach slab.

MoDOT Construction personnel will indicate the bridge approach slab used for this structure:

☐ Concrete Bridge Approach Slab

☐ Asphalt Bridge Approach Slab

Notes For Asphalt Slab Only:

Payment for furnishing all materials, labor and excavation necessary to construct the asphalt bridge approach slab, including tack, curb, and Type 5 aggregate base within the pay limits shown, complete in place, will be considered completely covered by the contract unit price for Bridge Approach Slab (Minor) per square yard.

Application of tack is required between lifts per Sec 403.

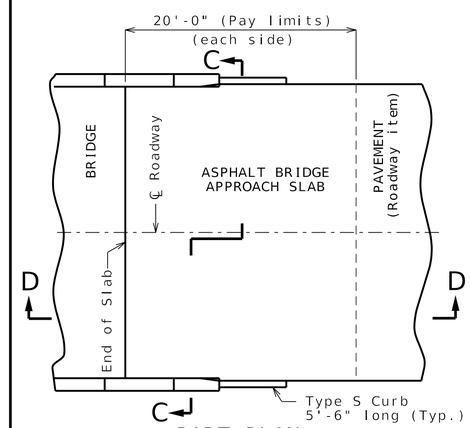

PART PLAN

(Squared structure shown, skewed structure similar)

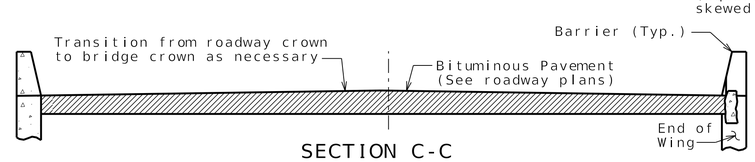

SECTION C-C

With the approval of the engineer, the contractor may crown the bottom of the approach slab to match the crown of the roadway surface.

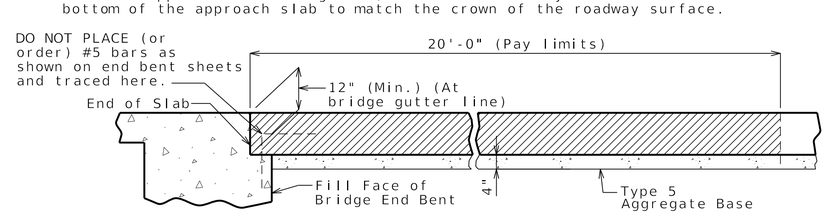

SECTION D-D

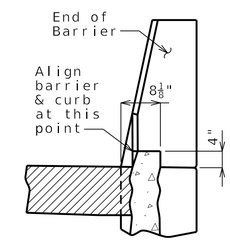

4" TYPE S CURB

See Missouri Standard Plan 609.00 for details of Type S curb.

OPTIONAL ASPHALT SLAB (NOT ALLOWED WITH CONCRETE PAVEMENT)

BRIDGE APPROACH SLAB (MINOR)

Integral end bents shown, non-integral end bent similar.

Detailed May 2024
Checked Aug. 2024

Note: This drawing is not to scale. Follow dimensions.

Digitally signed by Grant Luckenbill
Date: 2025.08.06 09:08:07-05'00'
GRANT C. LUCKENBILL NUMBER PE-2012018100
8-6-25
GRANT C. LUCKENBILL-ENGINEER
MO# PE-2012018100

DATE PREPARED 8/5/2025
ROUTE 248 | STATE MO
DISTRICT BR | SHEET NO. 26
COUNTY BARRY
JOB NO. JSR0119
CONTRACT ID.
PROJECT NO.
BRIDGE NO. A9432

DESCRIPTION | DATE

MISSOURI HIGHWAYS AND TRANSPORTATION COMMISSION
105 WEST CAPITOL
JEFFERSON CITY, MO 65102
1-888-ASK-MODOT (1-888-275-6636)

IF A SEAL IS PRESENT ON THIS SHEET IT HAS BEEN ELECTRONICALLY SEALED AND DATED.

olsson
550 ST. LOUIS STREET
SPRINGFIELD, MO 65806
PHONE: 417.890.8802
CERTIFICATE OF AUTHORITY NO. 001592

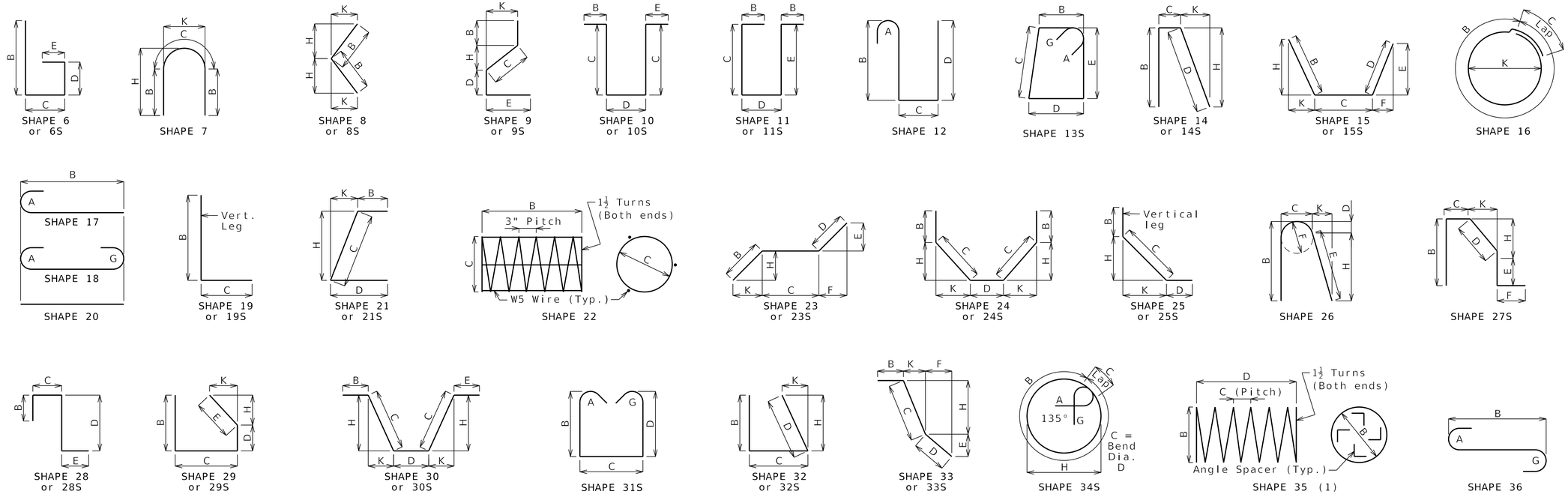

Finished Bend Diameters D and Hook Dimensions

Standard Pin Bend Shapes

Size	Case	D	A or G 90°	A or G 180°	J 180°
#4	1	3"	8"	6"	4"
#5	1	3¾"	10"	7"	5"
#6	1	4½"	12"	8¼"	6"
#7	2	5¼"	14"	9¾"	7"
	3	7"	15"	11½"	8¾"
#8	2	6"	16"	11"	8"
	3	8"	17"	13¼"	10"
#9	1	9½"	19½"	15½"	11¾"
#10	1	10¾"	22"	17½"	13¼"
#11	1	12"	24½"	19½"	14⅞"
#14	1	18¼"	31¼"	27½"	21⅝"
#18	1	24"	41½"	36¼"	28½"

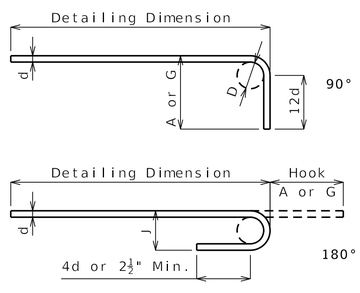

Stirrup Pin Bend Shapes (S)

Size	Case	D	A or G 90°	A or G 135°	A or G 180°	H 135°	J 180°
#4	2	2"	4½"	4½"	5"	2⅝"	3"
	3	3"	5"	5¼"	6"	3"	4"
#5	2	2½"	5¾"	5¾"	5¾"	3⅝"	3¾"
	3	3¾"	6¼"	6½"	7"	3⅞"	5"
#6	1	4½"	12"	7¾"	8¼"	4⅝"	6"

Applicable for all grades of steel.

Case 1 applies to all reinforcement. Case 2 applies to all reinforcement except for galvanized bars. Case 3 applies to galvanized bars only.

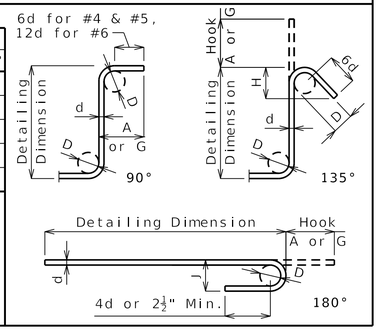

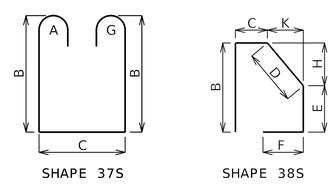

BENDING DIAGRAMS

All dimensions are out to out.

Shapes ending with an S shall be bent in accordance with stirrup pin bend shapes.

Unless otherwise noted, finished bending diameter D is the same for all bends of a shape.

Reinforcing Steel Totals (Pounds)

	Size	Substructure Plain	Substructure Epoxy	Superstructure Slab Plain	Superstructure Slab Epoxy	Superstructure Barrier	Superstructure Slip Form	Entire Bridge Plain	Entire Bridge Epoxy
By Size	W5	0	0	0	0	0	0	0	0
	4	2,492	0	0	1,159	0	0	2,492	1,159
	5	0	0	0	43,511	24,075	885	0	68,471
	6	7,152	0	0	50,069	0	0	7,152	50,069
	7	0	0	0	994	0	0	0	994
	8	0	0	0	39,563	0	0	0	39,563
	9	15,687	0	0	0	0	0	15,687	0
	10	14,413	0	0	0	0	0	14,413	0
	11	0	0	0	0	0	0	0	0
	14	0	0	0	0	0	0	0	0
	18	0	0	0	0	0	0	0	0
By Type		39,744	0	0	135,296	24,075	885	39,744	160,256

All superstructure reinforcing steel shall be epoxy coated unless otherwise specified.

BILL OF REINFORCING STEEL

Detailed May 2024
Checked Aug. 2024

Note: This drawing is not to scale. Follow dimensions.

Digitally signed by Grant Luckenbill
Date: 2025.08.06 10:07:47-05'00'

GRANT C. LUCKENBILL NUMBER PE-2012018100

8-6-25
GRANT C. LUCKENBILL-ENGINEER
MO# PE-2012018100

DATE PREPARED	
8/5/2025	
ROUTE 248	STATE MO
DISTRICT BR	SHEET NO. 27
COUNTY BARRY	
JOB NO. JSR0119	
CONTRACT ID.	
PROJECT NO.	
BRIDGE NO. A9432	

DATE	DESCRIPTION

IF A SEAL IS PRESENT ON THIS SHEET IT HAS BEEN ELECTRONICALLY SEALED AND DATED.

MISSOURI HIGHWAYS AND TRANSPORTATION COMMISSION
105 WEST CAPITOL
JEFFERSON CITY, MO 65102
1-888-ASK-MODOT (1-888-275-6636)

olsson
550 ST. LOUIS STREET
SPRINGFIELD, MO 65806
PHONE: 417.890.8802
CERTIFICATE OF AUTHORITY NO. 001592

Bill of Reinforcing Steel

No. Req.	Size/ Mark	Location	Codes C	Codes SH	Codes V	Dimensions B ft in.	C ft in.	D ft in.	E ft in.	F ft in.	H ft in.	K ft in.	Nom. Length ft in.	Actual Length ft in.	Weight lb
		Substructure													
		Int Bent 2													
26	6 D200	BEAM		20		2 6.00							2 6	2 6	98
8	9 H200	BEAM		18		26 6.00							29 1	29 1	791
8	9 H201	BEAM		20		26 6.00							26 6	26 6	721
12	6 H202	BEAM		20		26 6.00							26 6	26 6	478
16	6 H203	BEAM		10S			12.00	4 1.50					6 2	5 10	140
30	4 P200	COLUMN		16		11 9.25	2 5.00					3 9.00	14 2	14 1	282
60	4 P201	DRILLED SHAFT		16		12 6.75	2 1.00					4 0.00	14 8	14 6	581
28	6 U200	BEAM		13S		2 10.00	5 3.00	2 10.00	5 3.00				17 6	17 0	715
25	6 U201	BEAM		13S		4 3.00	5 3.00	4 3.00	5 3.00				20 4	19 10	745
4	6 U202	BEAM		10S			5 3.00	2 10.00					13 4	13 0	78
6	6 U203	BEAM		10S			5 3.00	4 3.00					14 9	14 5	130
42	9 V200	COLUMN		20		16 9.00							16 9	16 9	2392
42	9 V201	DRILLED SHAFT		20		8 5.00							8 5	8 5	1202
42	10 V202	DRILLED SHAFT		20		28 11.00							28 11	28 11	5226
		Int Bent 3													
26	6 D300	BEAM		20		2 6.00							2 6	2 6	98
8	9 H300	BEAM		18		26 6.00							29 1	29 1	791
8	9 H301	BEAM		20		26 6.00							26 6	26 6	721
12	6 H302	BEAM		20		26 6.00							26 6	26 6	478
16	6 H303	BEAM		10S			12.00	4 1.50					6 2	5 10	140
32	4 P300	COLUMN		16		11 9.25	2 5.00					3 9.00	14 2	14 1	301
52	4 P301	DRILLED SHAFT		16		12 6.75	2 1.00					4 0.00	14 8	14 6	504
28	6 U300	BEAM		13S		2 10.00	5 3.00	2 10.00	5 3.00				17 6	17 0	715
25	6 U301	BEAM		13S		4 3.00	5 3.00	4 3.00	5 3.00				20 4	19 10	745
4	6 U302	BEAM		10S			5 3.00	2 10.00					13 4	13 0	78
6	6 U303	BEAM		10S			5 3.00	4 3.00					14 9	14 5	130
42	9 V300	COLUMN		20		18 4.00							18 4	18 4	2618
42	9 V301	DRILLED SHAFT		20		8 5.00							8 5	8 5	1202
42	10 V302	DRILLED SHAFT		20		24 11.00							24 11	24 11	4503
		Int Bent 4													
26	6 D400	BEAM		20		2 6.00							2 6	2 6	98
8	9 H400	BEAM		18		26 6.00							29 1	29 1	791
8	9 H401	BEAM		20		26 6.00							26 6	26 6	721
12	6 H402	BEAM		20		26 6.00							26 6	26 6	478
16	6 H403	BEAM		10S			12.00	4 1.50					6 2	5 10	140
32	4 P400	COLUMN		16		11 9.25	2 5.00					3 9.00	14 2	14 1	301
54	4 P401	DRILLED SHAFT		16		12 6.75	2 1.00					4 0.00	14 8	14 6	523
28	6 U400	BEAM		13S		2 10.00	5 3.00	2 10.00	5 3.00				17 6	17 0	715
25	6 U401	BEAM		13S		4 3.00	5 3.00	4 3.00	5 3.00				20 4	19 10	745
4	6 U402	BEAM		10S			5 3.00	2 10.00					13 4	13 0	78
6	6 U403	BEAM		10S			5 3.00	4 3.00					14 9	14 5	130
42	9 V400	COLUMN		20		17 9.00							17 9	17 9	2535
42	9 V401	DRILLED SHAFT		20		8 5.00							8 5	8 5	1202
42	10 V402	DRILLED SHAFT		20		25 11.00							25 11	25 11	4684
		Superstructure													
		End Bent 1													
24	6 F100	WING BRACE	E	23S		14.00	4 11.75	2 3.00	19.00	19.00	10.00	10.00	8 5	8 4	300
10	6 F101	DIAPHRAGM	E	19S		2 8.25	5 10.50						8 7	8 5	126
8	7 H100	BEAM	E	20		30 5.00							30 5	30 5	497
4	6 H101	BEAM	E	20		30 5.00							30 5	30 5	183
5	6 H102	BEAM	E	18		4 1.25							5 6	5 6	41
2	6 H103	DIAPHRAGM	E	20		2 4.00							2 4	2 4	7
10	6 H104	DIAPHRAGM	E	20		3 7.00							3 7	3 7	54
2	6 H105	DIAPHRAGM	E	20		7 7.00							7 7	7 7	23

Bill of Reinforcing Steel

No. Req.	Size/ Mark	Location	Codes C	Codes SH	Codes V	Dimensions B ft in.	C ft in.	D ft in.	E ft in.	F ft in.	H ft in.	K ft in.	Nom. Length ft in.	Actual Length ft in.	Weight lb
10	6 H106	DIAPHRAGM	E	20		10 0.00							10 0	10 0	150
6	6 H107	DIAPHRAGM	E	20		30 5.00							30 5	30 5	274
3	5 H108	STRAND TIE	E	20		5 9.00							5 9	5 9	18
4	6 H109	DIAPHRAGM	E	20		30 5.00							30 5	30 5	183
28	5 H110	DIAPHRAGM	E	19S		2 0.00	15.00						3 3	3 2	92
52	6 H111	WING	E	20		17 8.00							17 8	17 8	1380
16	8 H112	WING	E	20		18 6.00							18 6	18 6	790
14	5 U100	BEAM	E	10S			6 10.00	2 9.00					16 5	16 2	236
21	4 U101	BEAM	E	13S		2 9.00	2 8.00	2 9.00	2 8.00				11 7	11 4	159
22	5 U102	DIAPHRAGM	E	10S			5 7.00	2 3.00					13 5	13 2	302
22	6 U103	DIAPHRAGM	E	19S		4 5.00	2 9.00						7 2	7 0	231
38	6 U104	DIAPHRAGM	E	19S		3 3.00	4 7.00						7 10	7 8	438
16	5 V100	BEAM	E	20		6 10.00							6 10	6 10	114
64	6 V101	WING	E	20		8 9.00							8 9	8 9	841
4	6 V102	WING	E	20		8 9.00							8 9	8 9	53
15	6 V103	DIAPHRAGM	E	20		4 8.00							4 8	4 8	105
		End Bent 5													
24	6 F500	WING BRACE	E	23S		14.00	4 11.75	2 3.00	19.00	19.00	10.00	10.00	8 5	8 4	300
10	6 F501	DIAPHRAGM	E	19S		2 8.25	5 10.50						8 7	8 5	126
8	7 H500	BEAM	E	20		30 5.00							30 5	30 5	497
4	6 H501	BEAM	E	20		30 5.00							30 5	30 5	183
5	6 H502	BEAM	E	18		4 1.25							5 6	5 6	41
2	6 H503	DIAPHRAGM	E	20		2 4.00							2 4	2 4	7
10	6 H504	DIAPHRAGM	E	20		3 7.00							3 7	3 7	54
2	6 H505	DIAPHRAGM	E	20		7 7.00							7 7	7 7	23
10	6 H506	DIAPHRAGM	E	20		10 0.00							10 0	10 0	150
6	6 H507	DIAPHRAGM	E	20		30 5.00							30 5	30 5	274
3	5 H508	STRAND TIE	E	20		5 9.00							5 9	5 9	18
4	6 H509	DIAPHRAGM	E	20		30 5.00							30 5	30 5	183
28	5 H510	DIAPHRAGM	E	19S		2 0.00	15.00						3 3	3 2	92
52	6 H511	WING	E	20		17 8.00							17 8	17 8	1380
16	8 H512	WING	E	20		18 6.00							18 6	18 6	790
14	5 U500	BEAM	E	10S			6 10.00	2 9.00					16 5	16 2	236
21	4 U501	BEAM	E	13S		2 9.00	2 8.00	2 9.00	2 8.00				11 7	11 4	159
22	5 U502	DIAPHRAGM	E	10S			5 7.00	2 3.00					13 5	13 2	302
22	6 U503	DIAPHRAGM	E	19S		4 5.00	2 9.00						7 2	7 0	231
38	6 U504	DIAPHRAGM	E	19S		3 3.00	4 7.00						7 10	7 8	438
16	5 V500	BEAM	E	20		6 10.00							6 10	6 10	114
64	6 V501	WING	E	20		8 11.00							8 11	8 11	857
4	6 V502	WING	E	20		9 1.00							9 1	9 1	55
15	6 V503	DIAPHRAGM	E	20		4 8.00							4 8	4 8	105
		Int Diaphragms													
12	6 H50	DIAPHRAGM	E	20		7 7.00							7 7	7 7	137
12	6 H51	DIAPHRAGM	E	20		10 0.00							10 0	10 0	180
48	4 H52	DIAPHRAGM	E	20		10 4.00							10 4	10 4	331
12	5 H53	STRAND TIE	E	20		4 8.00							4 8	4 8	58
6	5 H54	STRAND TIE	E	20		5 9.00							5 9	5 9	36
84	4 U50	DIAPHRAGM	E	28S			2 3.00	5 6.00	18.00				9 3	9 1	510
24	6 U51	DIAPHRAGM	E	28S			2 3.00	5 6.25	2 2.00				9 11	9 7	345
24	6 U52	DIAPHRAGM	E	28S			2 3.00	4 11.50	2 2.00				9 5	9 1	327
24	6 U53	DIAPHRAGM	E	28S			1 10.00	4 11.25	2 2.00				8 11	8 7	309
12	5 U54	DIAPHRAGM	E	19S		4 5.00	12.00						5 5	5 4	67
60	5 U55	DIAPHRAGM	E	11S	12		4 8.00	12.00	16.00				7 0	6 10	
		Incr.= 0.750"					4 8.00	12.00	19.00				7 3	7 1	435
24	5 V50	DIAPHRAGM	E	20		5 8.00							5 8	5 8	142
		Slab													
25	8 S1	SLAB	E	20		25 8.00							25 8	25 8	1713
271	5 S2	SLAB	E	20		60 0.00							60 0	60 0	16959
100	8 S3	SLAB	E	20		60 0.00							60 0	60 0	16020
25	5 S4	SLAB	E	20		28 0.00							28 0	28 0	730
96	8 S5	SLAB	E	20		49 0.00							49 0	49 0	12560
48	8 S6	SLAB	E	20		60 0.00							60 0	60 0	7690
875	6 S9	SLAB	E	20		30 5.00							30 5	30 5	39975
56	5 S8	SLAB	E	20		23 2.00							23 2	23 2	1353
700	5 S9	SLAB	E	20		30 5.00							30 5	30 5	22207

Nominal lengths are based on out to out dimensions shown in bending diagrams and are listed to the nearest inch for fabricator's use. Actual lengths are measured along centerline bar to the nearest inch. Weights are based on actual lengths.

For bending diagrams and steel reinforcing totals, see Sheet No. 27.

Detailed May 2024
Checked Aug. 2024

All bars shall be Grade 60.

Codes: C = Required coatings, where E = Epoxy Coated and G = Galvanized.

SH = Required shape, see bending diagrams.

V = Sets of varied bars and number of bars of each length. Bar dimensions vary in equal increments between dimensions shown on this line and the following line and the actual length dimension shown on this line and the following line vary by the specified increment.

BILL OF REINFORCING STEEL

Note: This drawing is not to scale. Follow dimensions.

Digitally signed by Grant Luckenbill
Date: 2025.08.06 10:08:42-05'00'

GRANT C. LUCKENBILL NUMBER PE-2012018100
8-6-25
GRANT C. LUCKENBILL-ENGINEER
MO# PE-2012018100

DATE PREPARED 8/5/2025
ROUTE 248 | STATE MO
DISTRICT BR | SHEET NO. 28
COUNTY BARRY
JOB NO. JSR0119
CONTRACT ID.
PROJECT NO.
BRIDGE NO. A9432

DESCRIPTION | DATE

MISSOURI HIGHWAYS AND TRANSPORTATION COMMISSION
105 WEST CAPITOL
JEFFERSON CITY, MO 65102
1-888-ASK-MODOT (1-888-275-6636)

IF A SEAL IS PRESENT ON THIS SHEET IT HAS BEEN ELECTRONICALLY SEALED AND DATED.

olsson
550 ST. LOUIS STREET
SPRINGFIELD, MO 65806
PHONE: 417.890.8802
CERTIFICATE OF AUTHORITY NO. 001592

Bill of Reinforcing Steel

No. Req.	Size/ Mark	Location	Codes C	Codes SH	Codes V	Dimensions B ft in.	C ft in.	D ft in.	E ft in.	F ft in.	H ft in.	K ft in.	Nom. Length ft in.	Actual Length ft in.	Weight lb
		Barrier													
20	5 K1	BARRIER	E	27S		3 8.00	9.25	5.25	3 2.75		5.25	1.00	8 1	7 11	165
96	5 K2	BARRIER	E	27S		3 8.00	9.25	14.50	2 5.75		14.25	2.75	8 2	7 11	793
20	5 K4	BARRIER	E	19S	4	2 4.25	10.00						3 2	3 1	
		Incr.= 0.500"				2 6.25	10.00						3 4	3 3	66
20	5 K5	BARRIER	E	38S	4			18.50	9.50	8.25	18.00	4.00	3 0	2 11	
		Incr.= 0.500"						20.50	9.50	8.25	20.00	4.50	3 2	3 1	63
12	5 K6	BARRIER	E	19S		2 6.75	10.00						3 5	3 3	41
12	5 K7	BARRIER	E	21S			2 6.75	10.00			2 6.00	6.25	3 5	3 3	41
36	5 K8	BARRIER	E	19S	4	2 8.50	10.00						3 7	3 5	
		Incr.= 0.750"				3 2.50	10.00						4 1	3 11	138
36	5 K9	BARRIER	E	21S	4	2 8.50	10.00				3 7.75	6.75	3 7	3 5	
		Incr.= 0.750"				3 2.50	10.00				3 1.75	7.75	4 1	3 11	138
48	5 K10	BARRIER	E	19S		3 3.00	10.00						4 1	4 0	200
48	5 K11	BARRIER	E	21S			3 3.00	10.00			3 2.25	7.75	4 1	3 11	196
48	5 K12	BARRIER	E	20		18 9.00							18 9	18 9	939
24	5 K13	BARRIER	E	20	8	12 0.00							12 0	12 0	
		Incr.= 36.000"				18 0.00							18 0	18 0	375
894	5 R1	BARRIER	E	26		3 3.00	5.50	2.25	3 1.25	5.50	3 0.75	6.75	6 10	6 9	6294
894	5 R2	BARRIER	E	19S		20.50	9.50						2 6	2 5	2253
894	5 R3	BARRIER	E	27S			9.50	15.25	5.00	12.00	15.00	3.00	3 6	3 4	3108
140	5 R4	BARRIER	E	20		11 9.00							11 9	11 9	1716
40	5 R5	BARRIER	E	20		52 4.00							52 4	52 4	2183
40	5 R6	BARRIER	E	20		46 11.00							46 11	46 11	1957
20	5 R7	BARRIER	E	20		55 9.00							55 9	55 9	1163
40	5 R8	BARRIER	E	20		53 10.00							53 10	53 10	2246
		Slip Form													
60	5 C1	SLIP FORM	E	20		12 0.00							12 0	12 0	751
16	5 C2	SLIP FORM	E	20		8 0.00							8 0	8 0	134

Bill of Reinforcing Steel

No. Req.	Size/ Mark	Location	Codes C	Codes SH	Codes V	Dimensions B ft in.	C ft in.	D ft in.	E ft in.	F ft in.	H ft in.	K ft in.	Nom. Length ft in.	Actual Length ft in.	Weight lb

Nominal lengths are based on out to out dimensions shown in bending diagrams and are listed to the nearest inch for fabricator's use. Actual lengths are measured along centerline bar to the nearest inch. Weights are based on actual lengths.

For bending diagrams and steel reinforcing totals, see Sheet No. 27.

All bars shall be Grade 60.

Codes: C = Required coatings, where E = Epoxy Coated and G = Galvanized.

SH = Required shape, see bending diagrams.

V = Sets of varied bars and number of bars of each length. Bar dimensions vary in equal increments between dimensions shown on this line and the following line and the actual length dimension shown on this line and the following line vary by the specified increment.

Detailed May 2024
Checked Aug. 2024

Note: This drawing is not to scale. Follow dimensions.

BILL OF REINFORCING STEEL

Digitally signed by Grant Luckenbill
Date: 2025.08.06 10:07:39-05'00'
GRANT C. LUCKENBILL NUMBER PE-2012018100
8-6-25
GRANT C. LUCKENBILL-ENGINEER
MO# PE-2012018100

DATE PREPARED 8/5/2025
ROUTE 248 | STATE MO
DISTRICT BR | SHEET NO. 29
COUNTY BARRY
JOB NO. JSR0119
CONTRACT ID.
PROJECT NO.
BRIDGE NO. A9432

DESCRIPTION | DATE

IF A SEAL IS PRESENT ON THIS SHEET IT HAS BEEN ELECTRONICALLY SEALED AND DATED.

MISSOURI HIGHWAYS AND TRANSPORTATION COMMISSION
105 WEST CAPITOL
JEFFERSON CITY, MO 65102
1-888-ASK-MODOT (1-888-275-6636)

olsson
550 ST. LOUIS STREET
SPRINGFIELD, MO 65806
PHONE: 417.890.8802
CERTIFICATE OF AUTHORITY NO. 001592